© Siemens 2024

SIEMENS

SIMATIC PCS 7

SIMATIC PCS 7
Process Control System
Volume 1: System components

siemens.com/simatic-pcs7

Catalog
ST PCS 7

Edition
2024

Промэлектроника, sales@prom-elec.com

© Siemens 2024

Related catalogs

Catalogs for Process Automation

www.siemens.com/pa-catalogs

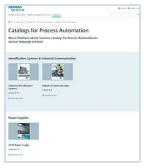

Process Automation FI 01
Products for
Process Instrumentation

PDF (E86060-K6201-A101-C4-7600)

SIMATIC ST PCS 7 T
SIMATIC PCS 7 Process Control System
Vol. 2: Technology components

PDF (E86060-K4678-A141-A5-7600)

Process Automation AP 01
Process Analytical Instruments

PDF (E86060-K3501-A101-B5-7600)

SIMATIC ST PCS 7 AO
SIMATIC PCS 7
Process Control System
Vol. 3: Add-ons for SIMATIC PCS 7

PDF (E86060-K4678-A121-B5-7600)

Process Automation WT 10
Products for Weighing Technology

PDF (E86060-K6410-A101-A8-7600)

SIMATIC ST 70
Products for
Totally Integrated Automation

PDF (E86060-K4670-A101-C1-7600)

SITRAIN
Digital Industry Academy

www.siemens.com/sitrain

SIMATIC HMI / PC-based Automation ST 80/ST PC
Human Machine Interface Systems
PC-based Automation

PDF (E86060-K4680-A101-D1-7600)

SiePortal
Information and Ordering Platform
on the Internet

sieportal.siemens.com

SITOP KT 10.1
SITOP
Power Supply

PDF (E86060-D4001-A510-E0)

Contact
Your personal contact can be found in our
Contacts Database at:

www.siemens.com/automation-contact

© Siemens 2024

SIMATIC PCS 7 V10.0 Process Control System

System components

SIMATIC PCS 7

Catalog ST PCS 7 · 2024

Supersedes:
Catalog ST PCS 7 · 2016
Catalog ST PCS 7 · 2017
Catalog ST PCS 7 · April 2021

Refer to SiePortal for current updates of this catalog:
sieportal.siemens.com
and as PDF at the following address:
www.siemens.com/stpcs7

© Siemens AG 2024

Software Media and Logistics	1
System Administration	2
Engineering System	3
SIMATIC PCS 7 Plant Automation Accelerator	4
Operator System	5
Process data archiving and reporting	6
Plant Device Management	7
Batch automation	8
Route Control	9
Safety Integrated for Process Automation	10
Industrial Security	11
Process Control System IPC	12
Automation systems	13
Industrial communication	14
Process I/O	15
Update/upgrade packages	16
Services for SIMATIC PCS 7	17
Appendix	18

The products and systems described in this catalog are manufactured/distributed under application of a certified quality management system in accordance with DIN EN ISO 9001 (Certified Registration No. 000656 QM08). The certificate is recognized by all IQNet countries.

© Siemens 2024

© Siemens 2024

"The SIMATIC PCS 7 Distributed Control System has proven itself in countless plants worldwide. It's a true all-rounder and convinces with suitable applications for integrated engineering and integrated operation. Its innovative hardware platform opens up new perspectives for a digital future."

Time-to-market
Seamless data integration transfer from process design to plant engineering

Quality
Designed and built to meet the rigid requirements of the automation market

Costs
Templates and libraries ensure consistency and reduce costs

Cybersecurity
Ensures system's integrity through built-in safety-certified security features

Increased Flexibility
Scalable from small to large projects

Operational Efficiency
Asset management tools ensure lower maintenance costs

Increased Productivity
System reliability and redundancy reduce unplanned downtime

© Siemens 2024

SIMATIC PCS 7
Proven performance for process control

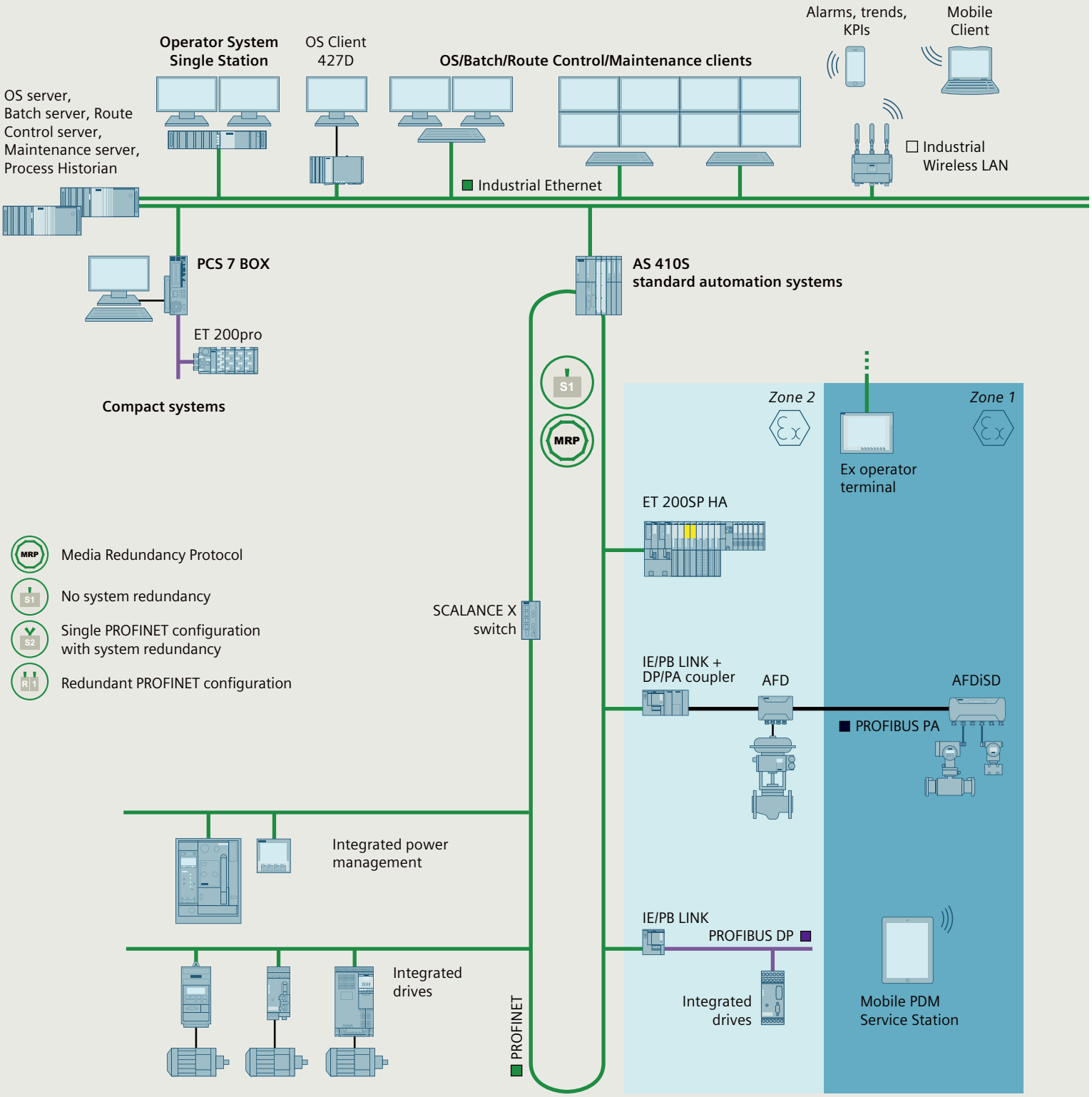

© Siemens 2024

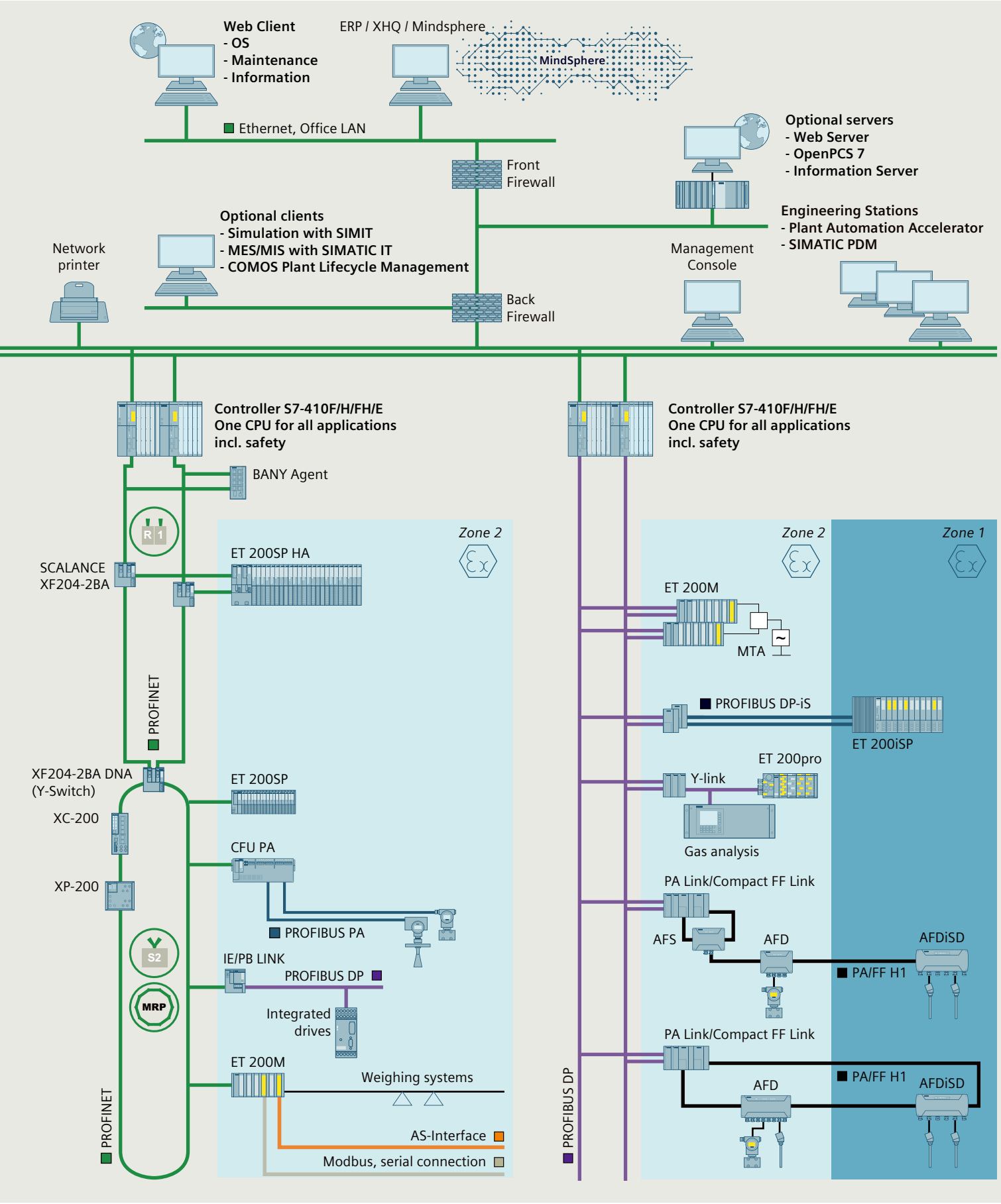

© Siemens 2024

SIMATIC PCS 7 – the process control system with proven performance

SIMATIC PCS 7 has already proven itself in tens of thousands of installations with countless satisfied customers worldwide. Its system architecture is characterized by standardized and efficient engineering. The control system is a real all-rounder and ensures maximum safety in plant operation thanks to its integrated and optimally tailored applications. Thanks to its clear visualization, it also offers intuitive operability. Already a powerful solution today, SIMATIC PCS 7 also paves the way for the digital future of process control technology with its innovative hardware platform.

SIMATIC PCS 7 benefits from its seamless integration in Siemens Totally Integrated Automation (TIA), a complete range of matched products, systems, and solutions for all hierarchy levels of industrial automation - from the enterprise management level, to the control level, all the way down to the field level.
This enables integrate, customized automation in all sectors of the process and hybrid industry.

An essential advantage of the consistency of the product and system spectrum and the solutions based upon this spectrum is that faster and more precise control sequences, as well as integrated security functions of shared hardware, engineering, and engineering tools can be used for automation of continuous and discontinuous processes.

© Siemens 2024

More flexibility in process automation

In process plants, the process control system is the starting point for optimal value added: All procedures and processes can be operated, monitored and influenced with the process control system.

The higher the performance of the process control system, the more effectively this potential can be used. For this reason, performance is in the foreground with SIMATIC PCS 7, alongside scalability, flexibility and integration.
Starting with planning and engineering, SIMATIC PCS 7 offers powerful tools, functions and features for cost-effective and efficient plant operation through all phases of the plant life cycle.

Flexibility through integration

Integration is one of the special strengths of SIMATIC PCS 7. It has numerous aspects:

- Horizontal integration into TIA
- Vertical integration into hierarchical communication
- System-integrated tools for engineering tasks
- Integration of the field level, including drives, switchgear, etc.
- Integrated functions, e.g. for batch process automation, route control, process safety, energy management, telecontrol tasks, etc.

Horizontal integration
A system for integrated automation of the entire process chain, from incoming raw materials to outgoing goods – this is one of the decisive advantages resulting from the seamless integration of SIMATIC PCS 7 into Totally Integrated Automation.

The process control system is mainly responsible for automating the primary processes here, but it can do very much more: All ancillary facilities such as the electrical infrastructure in the form of low-voltage or medium-voltage switchgear or the building management system, can also be integrated into the system.

Integration of selected SIMATIC standard components – automation systems, industrial PCs, network components, or distributed process I/O – into the process control system ensures optimum interaction, and secures economic benefits such as ease of selection, reduced stock keeping, and global support.

© Siemens 2024

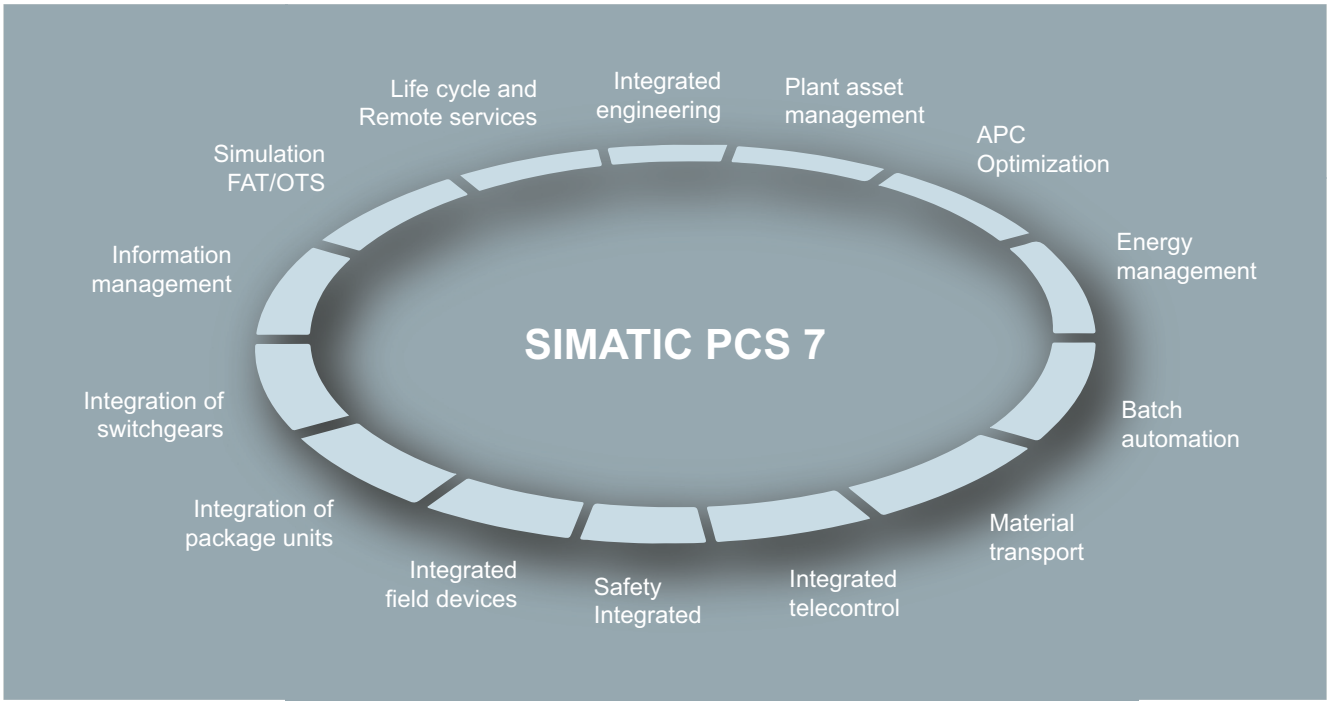

Vertical integration
The hierarchal communication of a company encompasses the field level, the control level and the process level, up to management and enterprise resource planning (ERP). Thanks to standardized interfaces – based on international industry standards as well as internal interfaces – SIMATIC PCS 7 is able to provide process data for analysis, planning, coordination, and optimization of plant sequences or production and business processes – in real time, and at any location in the company.

Central engineering
Impressive features of SIMATIC PCS 7 include graded functional diversity, consistent operator control philosophy and uniformly structured engineering and management tools. A central engineering system with a coordinated range of tools for integrated system engineering and configuring of batch automation, safety functions, material transport or telecontrol systems creates value added over the entire life cycle. Reductions in configuring and training costs minimize the total cost of ownership (TCO) over the entire plant life cycle.

Functional diversity
Depending on the typical process automation or customized requirements, the SIMATIC PCS 7 functions can be expanded by the following, for example:

- Batch process automation (SIMATIC BATCH)
- Functional safety and protection functions (Safety Integrated for Process Automation)
- Route control for material transport (SIMATIC Route Control)
- Telecontrol of remote units (SIMATIC PCS 7 TeleControl)
- Automation of electrical switchgear (SIMATIC PCS 7 PowerControl)

Further additional functions that are also integrated or can be integrated, seamlessly into the control system make optimization of processes and reductions in operating costs possible. SIMATIC PCS 7 features, for example, tools for energy and asset management and it offers higher quality closed-loop control functions, as well as industry-specific automation solutions and libraries.

© Siemens 2024

Custom automation

Thanks to its unique scalable system architecture, SIMATIC PCS 7 provides the ideal basis for cost-effective implementation of individual automation solutions and economic operation of processes.

SIMATIC PCS 7 users derive sustained profit from a modular system platform based on standard SIMATIC components. Its uniformity enables flexible scaling of hardware and software, as well as perfect interaction both within the system and beyond system limits. The architecture of the SIMATIC PCS 7 Process Control System is designed in such a manner that instrumentation and control can be configured in accordance with customer requirements and optimally matched to the dimensions of the plant. The control system can be subsequently expanded or reconfigured at any time if there is an increase in capacity or a technological modification.

When the plant grows, SIMATIC PCS 7 simply grows along with it – without the provision of expensive reserve capacities!

Use the opportunities offered by the object-oriented type and instance concept of SIMATIC PCS 7. The technological connections, variant formation and bidirectional comparison of the types with the instances make the control module types (CMT) even more powerful compared to the original function block templates. The technological connections of a Control Module such as parameters, signals or messages can be provided with attributes and used via drag and drop, e.g. on an SFC plan. In turn, options and variants can be used to extend the core function of the CMT with specific modules or functions, which can be activated individually for each instance. This minimizes the number of types required and thus reduces the effort for maintenance and service. For the technological content of the CM types, the future-oriented Adanced Process Library (APL) is included in the standard of SIMATIC PCS 7. Another major advantage resulting from the comprehensive type and instance concept is the seamless integration into other tools like SIMATIC PCS 7 Plant Automation Accelerator or SIMIT.

Flexibility and performance in engineering

The workflow in engineering for process plants is and remains a challenge: Multiple participants, many different data formats and multiple interfaces frequently result in transmission errors and system discontinuity and thus to greater time input and costs. Information generally gets lost or needs to be corrected manually when data exchanged between multiple disciplines.

For the first time, a fully integrated solution is now available for planning and documenting plant projects: the SIMATIC PCS 7 Plant Automation Accelerator. Customers benefit in particular from consistent engineering without system discontinuities between automation planning and the control system.

The object-based approach of the SIMATIC PCS 7 Plant Automation Accelerator allows you to work on a central data platform, ensuring fully integrated planning – from plant engineering through to automation – based on an electronic workflow.

© Siemens 2024

This workflow ranges from planning to issuing offers, including bills of materials, the automatic generation of process control data for the SIMATIC PCS 7 process control system from electrical engineering, to controlled mass data engineering and direct as-in documentation of the plant. This modular engineering approach increases overall project efficiency and minimizes risks. High standardization and simple configuration also save time and costs in engineering during the implementation phase. Simple synchronization between planning and engineering avoids duplicate input and interface losses and reduces project runtimes.

Flexibility in operation

Process control is also becoming increasingly complex due to the multi-layer nature of automation engineering and increased merging with information technology. Intuitive and fault free operation is therefore more important than ever with regard to efficient working and the minimization of downtimes and servicing requirements. Using effective Advanced Process Control (APC) functions and an excellent operator system, SIMATIC PCS 7 supports both optimization and user-friendly, safe control of the process. Monitoring of product quality and performance indicators additionally allows the process to be operated more economically. SIMATIC PCS 7 excels with its flexibility, plant availability, and investment security.

Process control and maintenance
The SIMATIC PCS 7 operator system is used to monitor process operation using various views, and permits interventions when necessary. Its architecture is flexible and scalable – from single-user systems up to multi-user systems with a redundant client/server architecture. The operator interface takes account of the current specifications of NAMUR (user association of automation technology in the process industries) and PI (Profibus International) and offers a high level of user-friendliness for simple, intuitive interaction with the plant.

Ergonomic symbols, task-oriented faceplates, uniform representation of status information, and optimized alarm functions allow safe process control. The alarm management function integrated in SIMATIC PCS 7 is able to focus on essential alarms and to specifically guide the operator in exceptional circumstances. In this way, it systematically reduces the workload of operating staff.

Preventive and predictive maintenance strategies reduce total cost of ownership. With the SIMATIC PCS 7 Maintenance Station, maintenance personnel always have a watchful eye on critical production equipment such as pumps, valves, distillation columns or motors, and can carry out the relevant maintenance measures in good time before servicing is required – independent of the maintenance plan and without the risk of an unscheduled plant standstill.

Process optimization
SIMATIC PCS 7 supports process optimization in many different ways, including:

- Control Performance Monitoring
- Advanced Process Control
- Process Historian

The Control Performance Monitoring function monitors and signals the control quality of the closed-loop control block. If the performance declines, the controller can be optimized in good time or specific maintenance measures can be initiated.

The integrated I&C libraries of SIMATIC PCS 7 also provide higher quality closed-loop control functions with which cost-effective Advanced Process Control applications can be implemented: Multi-variable control, predictive control, or override control. It is thus possible to effectively improve profitability, product quality, safety, and environmental protection in small and medium-sized plants.

Current and historic process data form the basis of all optimization. Secure and user-friendly real-time data storage and analysis is handled using the Process Historian. The process values, messages, and batch data managed in the database of the Process Historian can be called extremely rapidly. User-specific processing and visualization of this historic data are supported by the information server, which is a reporting system based on the Microsoft Reporting Services.

© Siemens 2024

SIMATIC PCS 7 V10.0

The new version of our established SIMATIC PCS 7 process control system is another building block for the digital enterprise.

SIMATIC PCS 7 V10.0 facilitates the route to digital transformation for the process industry – step by step. With its hardware and software innovations, the new version of our established process control system makes the step into digitalization even more secure and easier to plan.

From enhanced security measures and GMP-relevant audit functions to Modular Type Package (MTP) enhancements and seamless integration of new Microsoft Windows operating systems - our latest release is designed to optimize your plant's performance and protect it from cyber threats.

New features of Version 10.0 in a nutshell:

- Increased plant security through secure communication protocols, improved integrity checks and central management of Microsoft update deployment
- System-wide audit trail and electronic signatures ensure GMP conformity
- By using the SIMATIC Compact Field Unit with configurable I/Os, we achieve maximum flexibility by keeping hardware engineering independent from application engineering
- Improved MTP support with the ability to control MTP services, set service parameters, and interlink process values from SFC, CFC, or SIMATIC Batch
- Efficient support for service requests by leveraging plant information via a unique system ID (SID)

SIMATIC PCS 7 is based wholly on PROFINET. The leading international Industrial Ethernet standard represents the high-performance real-time communication required in the era of big data, right into the field. Rapid, reliable, redundant and high-performance, PROFINET gives our customers new options for integrated diagnostics, monitoring and evaluation of their data. It also enables flexible and easily scalable network structures and enormous costs savings throughout the life cycle thanks to a huge reduction in cabling required.

Of course, we all use digitization in our SIMATIC PCS 7 software innovations: our digital software portfolio and digital services for process automation therefore have and continue to be part an ongoing strategic development process, not least in the light of cloud applications.

The result: SIMATIC PCS 7 V10.0 offers our customers room for new perspectives – for greater flexibility in process automation.

© Siemens 2024

SIMATIC PCS 7 system and technology components

With the rugged, high-performance **SIMATIC PCS 7 system components** from Catalog ST PCS 7, you already have a versatile platform for cost-effective implementation and economical operation of your process control systems. Perfect interplay of these system components makes it possible for you to sustain high-quality production and to establish new products significantly faster on the market.

With **SIMATIC PCS 7 technology components** from Catalog ST PCS 7 T that can be seamlessly integrated into the process control system, you can expand the functional scope of the system components in a carefully targeted manner for specific automation tasks.

This covers a wide spectrum, for example:

- Telecontrol for monitoring and controlling remote plant units
- Automation technology for electrical low-voltage or medium-voltage switchgear
- Industry-specific automation systems for the cement and mining industries, as well as for laboratory and training facilities
- Graphical objects for task-oriented optimization of process visualization
- Block libraries for technological functions, package unit and panel integration, monitoring and analyzing mechanical assets, as well as for building automation systems (heating, ventilation, air-conditioning – FMCS/HVAC)
- Editors and function blocks for the efficient configuration of small or medium-sized automation systems with simple parameter control and materials management
- Process analytical technology for quality assurance through optimization of development and production processes based on up-to-date measurements, and critical quality and performance attributes
- Simulation system for testing and commissioning of plant-specific application software
- Flexible, high-performance Manufacturing Execution System (MES)
- System expansion for operator systems for the integration of third-party controllers, programmable logic controllers and package units
- Products for migration of the process control systems APACS+/QUADLOG or Bailey INFI 90/NET 90 with SIMATIC PCS 7

SIMATIC PCS 7 technology components have been released for all versions and service packs of SIMATIC PCS 7 system components. The development and testing of SIMATIC PCS 7 technology components are dependent on the corresponding SIMATIC PCS 7 system components, so versioning and release is normally offset by approximately 3 to 6 months.

Additional functionality can be integrated using add-on products

Modularity, flexibility, scalability, and the openness of SIMATIC PCS 7 offer optimal prerequisites for integrating supplementary components and solutions in the process control system in an applicative manner and thus extend and round off its functionality.

Many supplementary add-on products for SIMATIC PCS 7 have been developed by Siemens as well as by external partners (see Catalog ST PCS 7, Add-ons for the SIMATIC PCS 7 Process Control System). These software packages and hardware components authorized by the system manufacturer enable cost-effective implementation of SIMATIC PCS 7 for special automation tasks.

© Siemens AG 2024

Software Media and Logistics

1

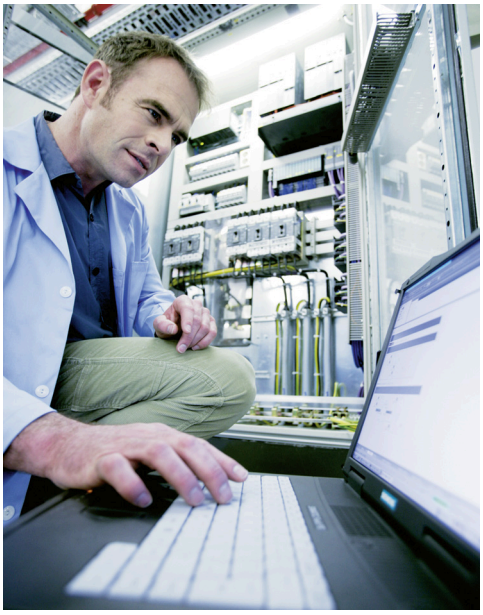

1/2	PCS 7 software packages
1/4	Software Update Service
1/8	System documentation

© Siemens AG 2024

Design

Product categories for SIMATIC PCS 7 software

Generally, the SIMATIC PCS 7 and TIA software products offered in Catalog ST PCS 7 can be categorized as follows:

- **Core products** (single, floating or rental license) with
  - Installation Software (software media package)
  - License key for software licensing
- **Secondary products** (single, floating or rental license) with
  - License key for licensing of installation software is delivered with a core product or supplied separately
- **Cumulative volume licenses (quantity options)** with
  - License keys for a specific license volume in the form of process objects (POs), archive tags, TAGs, agents, clients, sources or units

All software products categorized in this way are available as packages. As an alternative to this physical form of delivery, the installation software and the software and volume licenses are available online as well.

The available types of delivery for each product are explicitly specified in the ordering data and identified by different article numbers.

Goods delivery

The products are delivered in a form and package suitable for parcel shipment by conventional means of transportation to the shipping address of the customer.

The installation software (software media packages) and product-specific software licenses for the following products are separate packages, which are not merged into a single delivery unit when supplied in package form:

- SIMATIC PCS 7 core products

  (installation software provided as SIMATIC PCS 7 Software Media Package or SIMATIC PCS 7 Software Media Package ASIA)
- SIMATIC PDM, SIMATIC S7 F systems and SIMATIC S7 Safety Matrix

  (installation software provided as product-specific software media package)

The installation software (software media package) is provided once for each ordered item for these products. When ordering more than one item, you can influence the number of software media packages using the order item. For example, if you order three SIMATIC PCS 7 OS single station software products as a single ordered item, you will receive only one Software Media Package. However, if your order is divided into three ordered items, you will receive a software media package for each of the three software licenses.

Additional software media packages and volume licenses specified for the corresponding product can be ordered separately depending on the requirement.

The following table illustrates these ordering and delivery logistics:

Ordering of 3 units with one order item				Scope of supply	
Item No.	**Quantity**	**Product name**	**Article No.**	**Quantity**	**Components**
010	**3**	**SIMATIC PCS 7 OS software Single Station V10.0 incl. 100 OS Runtime PO**	6ES7658-2AA78-0YA0	3	License key USB flash drive, Certificate of License
				1	SIMATIC PCS 7 Software Media Package

Ordering of 3 units with three order items				Scope of supply	
Item No.	**Quantity**	**Product name**	**Article No.**	**Quantity**	**Components**
010	**1**	**SIMATIC PCS 7 OS software Single Station V10.0 incl. 100 OS Runtime PO**	6ES7658-2AA78-0YA0	1	License key USB flash drive, Certificate of License
				1	SIMATIC PCS 7 Software Media Package
020	**1**	**SIMATIC PCS 7 OS software Single Station V10.0 incl. 100 OS Runtime PO**	6ES7658-2AA78-0YA0	1	License key USB flash drive, Certificate of License
				1	SIMATIC PCS 7 Software Media Package
030	**1**	**SIMATIC PCS 7 OS software Single Station V10.0 incl. 100 OS Runtime PO**	6ES7658-2AA78-0YA0	1	License key USB flash drive, Certificate of License
				1	SIMATIC PCS 7 Software Media Package

These ordering and delivery logistics are not relevant for products that are typically supplied without a software media package. They include:

- Secondary products
- Core products with rental license
- Client software

Online delivery

We offer you online delivery for SIMATIC PCS 7 software and license keys. The decisive advantage over the delivery of goods lies in the fact that the software and licenses are available immediately and are easier to manage.

The software products and licenses that can be downloaded have different article numbers. They are ordered through the normal channels, e.g. the Industry Mall.

When ordering via the Industry Mall, you can filter out the ordering data of those products that can be delivered online with reference to the selected branch of the product and offering tree. This can be done by selecting "Online delivery" from a drop-down list on the right of the screen. This way you will achieve a better overview of the online offering.

When ordering a product that can be delivered online, the email address of the ship-to party must be provided. The recipient of the goods is informed by email at this address as soon as the ordered products are available for downloading. The email message with

© Siemens AG 2024

Design (continued)

the availability information also contains the login data. Parallel delivery on a data storage medium does not take place.

The software, license key and associated documents, e.g. the online Certificate of License (eCoL), are downloaded in the Automation License Manager (ALM). A license key can be downloaded once only. To log in, the login data received in the email is required. As an alternative, the access data to the Industry Mall account can be used for logging in.

Apart from the download, ALM also supports license management. You can, for example, get an overview of the available licenses or those obtained online, allocate licenses, and run a hardware-specific license analysis.

Selection and ordering data

SIMATIC PCS 7 Software Media Packages	
Runs with the following operating systems (see SIMATIC PCS 7 Readme and the product licenses for more details): • Windows 10 Enterprise 2019 LTS • Windows Server 2019 Standard Edition	
SIMATIC PCS 7 Software Media Package V10.0[1] Installation software and electronic documentation on USB flash drive, incl. Trial License for 14 days 5 languages (English, German, French, Italian, Spanish), software class A	
• Goods delivery USB flash drive, Certificate of License	**6ES7658-4XX78-0YT8**
• Online delivery Software download, online Certificate of License : Email address required!	**6ES7658-4XX78-0YG8**
SIMATIC PCS 7 Software Media Package ASIA V10.0[1] Installation software and electronic documentation on USB flash drive, incl. Trial License for 14 days 2 languages (English, Chinese), software class A	
• Goods delivery USB flash drive, Certificate of License	**6ES7658-4XX78-0CT8**

[1] Permanent use of SIMATIC PCS 7 software requires valid software licenses.

More information

Regional product versions

All SIMATIC PCS 7 software products are designed for international use, in other words there is only one product version for worldwide use and this is offered in up to 6 languages: English, German, French, Italian, Spanish and Chinese. However, the number of supported languages is not standard; it can vary from product to product.

In addition, a regional "ASIA" product version will also be offered for the SIMATIC PCS 7 Software Media Package and specific SIMATIC PCS 7 software products of the "Engineering System" and "Operator System" system components. The ASIA products are available in two languages: English and Chinese (simplified). They are explicitly identified in the name by the suffix "ASIA".

If a product listed in this catalog does not have the suffix "ASIA" in its name, it can always be used globally. However, the following restriction applies: If a regional ASIA product is offered, the pendant for international use does not support the Asian languages (currently Chinese simplified) present in the ASIA product.

The products for international use, i.e. products without the suffix "ASIA", are not intended as the basis for runtime systems with fonts in Asian languages.

The following special points must be observed as a result of the definition of separate products for installation software and licenses. The SIMATIC PCS 7 installation software is available in the form of two data medium packages:

- SIMATIC PCS 7 Software Media Package
- SIMATIC PCS 7 Software Media Package ASIA

The specific ASIA software licenses harmonize exclusively with the SIMATIC PCS 7 Software Media Package ASIA. SIMATIC PCS 7 software licenses for which there is no ASIA pendant can be used with both SIMATIC PCS 7 Software Media Packages.

© Siemens AG 2024

Overview

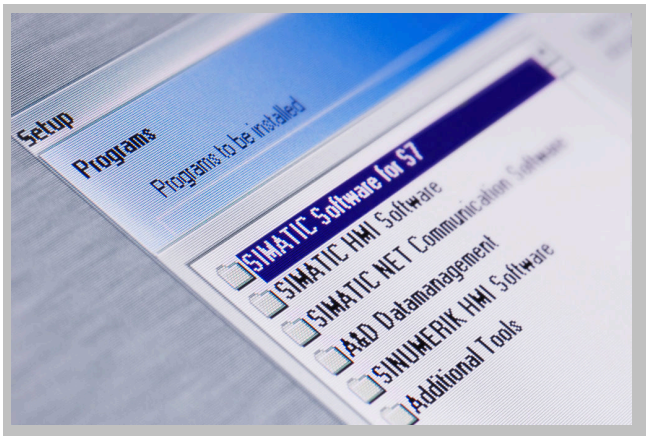

Software Update Service for SIMATIC PCS 7

Siemens offers a cost-effective Software Update Service (SUS) for international SIMATIC PCS 7 software products (except for specially marked regional variants, such as products with the "ASIA" label). If you utilize this service, you participate in the further development of the SIMATIC PCS 7 software you are using, and are always in possession of the latest release versions. You can join the Software Update Service for SIMATIC PCS 7 by purchasing SUS packages, and this is only possible on the basis of the current software versions at the time of purchase.

The SUS packages represent a structural division of the SIMATIC PCS 7 software product range using functional and system-specific aspects. The number and composition of the package components identified as **list elements** depend mainly on license aspects. A list element can represent a single software product or be a synonym for several products of the same type.

When purchasing **one** SUS package, you automatically receive all upgrades and ServicePacks for the software referred to in this package for one year. Within this period of one year, you are therefore authorized to update **one** corresponding license from your stock for **each** list element in this package. The total number of SUS packages of one type which you require is therefore determined by the list element which includes most of the software licenses you use.

An example of the SUS OS Server package should make this clear once again based on a fictitious license inventory:

Software products in inventory	License inventory	License inventory per list item	Number of SUS packages
3 × PCS 7 AS/OS Engineering software	3	4	4
1 × PCS 7 AS Engineering software	1	-	-
1 × Version Cross Manager	1	1	-
3 × PCS 7 SFC Visualization	3	3	-

For a list item that represents several products, existing licenses of these products are to be added in the inventory first. In the example, these are the licenses of the "PCS 7 AS/OS Engineering Software" and "PCS 7 AS Engineering Software" for the first list element of the SUS Engineering AS/OS.

The license inventory is defined by a single product for the other list items. The list item that combines the most licenses is ultimately decisive in determining the number of required SUS packages. Based on the example, you would therefore need to order 4 SUS Engineering AS/OS packages.

Duration of subscription, cancellation

Delivery is to the address entered in the order. An SUS is automatically extended for a further year unless canceled no later than 3 months prior to expiration. Cancellation must be made in writing, and must be sent to the dispatch center with reference to the contract number or can be made using the SUS Manager (http://www.siemens.com/sus-manager).

SUS editions

SUS packages are available as:

- SUS package
- SUS Compact
- SUS Download

SUS package is the most comprehensive package form. If you order this package n times, you will receive n number of packing units.

Each of these packing units contains

- Initial delivery: 1 Certificate of Contract
- Upgrade delivery: 1 data storage medium set, 1 license key USB flash drive with **one** license

SUS Compact reduces the scope of the package for the Software Update Service for multiple workstations and simplifies the central management of licenses.

If you order SUS Compact n times, you will receive only one packing unit. This packing unit contains

- Initial delivery: n Certificates of Contract
- Upgrade delivery: 1 data storage medium set, 1 license key USB flash drive with **n** licenses

SUS Compact is offered for the following SIMATIC PCS 7 SUS packages:

- SUS OS single station
- SUS OS server
- SUS OS Client, SFC Visualization
- SUS SIMATIC BATCH Server/Single Station
- SUS SIMATIC BATCH Client

SUS Download, which is delivered over the internet, has the advantage that software and licenses are available more rapidly than with goods delivery, and can also be managed more easily.

A recipient email address is required for delivery of SUS Download. An order item can only be assigned to a single email address. The consignee is informed by email as soon as the Certificates of Contract or the software and licenses are available for downloading.

Downloading of software, license keys, and associated documents is carried out in the Automation License Manager (ALM).

© Siemens AG 2024

Overview (continued)

SUS Manager

It is easy to manage SUS contracts, e.g. change the delivery form, with the SUS Manager:
http://www.siemens.com/susmanager

The following table uses an example to clarify the differences between the SUS editions:

Edition	SUS package	SUS Compact	SUS Download
Type of delivery	Goods delivery	Goods delivery	Online delivery
Order	25 × SUS package in one order item	25 × SUS Compact in one order item	25 × SUS Download in one order item
First delivery	25 × packing units with: • 1 × Certificate of Contract (CoC)	1 × packing unit with: • 25 × Certificate of Contract (CoC)	1 × email message for • 25 × Online Certificate of Contract (ECoC)
Subsequent delivery of Service Packs	25 × Service Pack (data storage medium set)	1 × Service Pack (data storage medium set)	1 × Service Pack (download)
Subsequent delivery of upgrades	25 × packing units with: • 1 × data storage medium set • 1 × license key USB flash drive with 1 license • 1 × Certificate of License (CoL)	1 × packing unit with: • 1 × data storage medium set • 1 × license key USB flash drive with 25 licenses • 25 × Certificate of License (CoL)	1 × email message for • Software download • 1 × license key download for 25 licenses • 1 × online Certificate of License for 25 CoL (zip file)
Billing	1 bill	1 bill	1 bill

If a comparable product exists in a different edition for an existing SUS package, the existing SUS contract can be modified accordingly if required.

Software Update Service for TIA products

In addition to the SUS for the SIMATIC PCS 7 process control system, there is also the SUS for SIMATIC PCS 7 products used in a different context (CFC, SIMATIC PDM) within the scope of Totally Integrated Automation (TIA). The SIMATIC PDM packages SUS PDM Basic and SUS PDM Complete are identical for both cases.

The SUS for SIMATIC S7 products that are used in the context of SIMATIC PCS 7, e.g. SUS S7-PLCSIM, round out the SUS offer.

© Siemens AG 2024

Design

Structure and content of the SUS packages for the SIMATIC PCS 7 Software Update Service

Note:

Each item of an SUS package (element in list) represents a software license.

SUS Engineering AS/OS	• PCS 7 AS/OS Engineering Software, PCS 7 AS Engineering Software • PCS 7 ES Single Station (AS/OS: 250 POs) • PCS 7 Management Console • PCS 7 Import-Export Assistant • Version Cross Manager • Version Trail • PCS 7 SFC Visualization • PCS 7 BCE • IE S7 license for communication via CP 1623/CP 1628
SUS Logic Matrix	• PCS 7 Logic Matrix Viewer
SUS PDM Basic[1]	• PDM Basic PDM Service PDM S7 PDM PCS 7 • PDM HART Server
SUS PDM Complete[1]	• PDM stand-alone server PDM PCS 7 server PDM PCS 7-FF • PDM HART Server
SUS OS single station (2 SUS packages are required for a redundant pair)	• PCS 7 OS Software Single Station, PCS 7 OS Software Single Station Redundancy (for one single station) • PCS 7 OpenPCS 7/OS Client • PCS 7 OpenPCS 7 • PCS 7 SFC Visualization • PCS 7 BCE • IE S7 license for communication via CP 1623/CP 1628
SUS OS server (2 SUS packages are required for a redundant pair)	• PCS 7 OS Software Server, PCS 7 OS Software Server Redundancy (for one server) • PCS 7 OpenPCS 7/OS Client • PCS 7 OpenPCS 7 • PCS 7 SFC Visualization • PCS 7 BCE • IE S7 license for communication via CP 1623/CP 1628
SUS Process Historian, Information Server (2 SUS packages are required for a redundant pair)	• PCS 7 Process Historian Basic Package, PCS 7 Process Historian Redundancy (for one server) PCS 7 Process Historian and Information Server Basic Package • PCS 7 Process Historian Archive BATCH • PCS 7 Process Historian OPC UA Server • PCS 7 Information Server Basic Package
SUS OS Client, SFC Visualization	• PCS 7 OS Software Client • PCS 7 SFC Visualization
SUS Web Server	• PCS 7 Web Server • PCS 7 Web Diagnostics Server • PCS 7 Web Diagnostics Client
SUS Maintenance Station	• PCS 7 Maintenance Station Engineering • PCS 7 Maintenance Station Runtime Basic Package • PCS 7 OS Software Client
SUS SIMATIC BATCH Server/Single Station	• PCS 7 SIMATIC BATCH Server • PCS 7 SIMATIC BATCH Single Station Package • PCS 7 SIMATIC BATCH Basic • PCS 7 SIMATIC BATCH API • PCS 7 BCE • IE S7 license for communication via CP 1623/CP 1628

Design (continued)

SUS SIMATIC BATCH Client	• PCS 7 SIMATIC BATCH Client • PCS 7 SIMATIC BATCH Recipe System
SUS SIMATIC Route Control	• PCS 7 SIMATIC Route Control Engineering • PCS 7 SIMATIC Route Control Center • PCS 7 SIMATIC Route Control Server • PCS 7 BCE • IE S7 license for communication via CP 1623/CP 1628

[1] Optional product components for SIMATIC PDM such as PDM Extended, PDM Integration in STEP 7/PCS 7, PDM Routing, PDM Server and PDM Communication FOUNDATION Fieldbus are each included in a product package listed in the SUS PDM Basic or SUS PDM Complete and are implicitly authorized to be updated via the corresponding license. You need to change from SUS PDM Basic to SUS PDM Complete to use the PDM Server or PDM Communication FOUNDATION Fieldbus product components.

© Siemens AG 2024

Selection and ordering data

SUS package	
SIMATIC PCS 7 Software Update Service, package Subscription for 1 year with automatic extension; requirement: Current software version; goods delivery	
• PCS 7 Software Update Service for Engineering AS/OS	6ES7658-1XX00-0YL8
• PCS 7 Software Update Service Logic Matrix	6ES7658-1JX00-0YL8
• PCS 7 Software Update Service for OS Single Station	6ES7658-2AX00-0YL8
• PCS 7 Software Update Service for OS Server	6ES7658-2BX00-0YL8
• PCS 7 Software Update Service Process Historian, Information Server	6ES7652-7XX00-0YL8
• PCS 7 Software Update Service for OS Client, SFC Visualization	6ES7658-2CX00-0YL8
• PCS 7 Software Update Service for Web Server	6ES7658-2GX00-2YL8
• PCS 7 Software Update Service for Maintenance Station	6ES7658-7GX00-0YL8
• PCS 7 Software Update Service for SIMATIC BATCH Server/Single Station	6ES7657-0SA00-0YL8
• PCS 7 Software Update Service for SIMATIC BATCH Client	6ES7657-0XX00-2YL8
• PCS 7 Software Update Service for SIMATIC Route Control	6ES7658-7DX00-0YL8
Software Update Service for TIA products, package (SIMATIC PCS 7 products used in a different context, as well as SIMATIC S7 products used with SIMATIC PCS 7) Subscription for 1 year with automatic extension; requirement: current software version	
• SIMATIC PDM Basic Software Update Service	6ES7658-3XX01-0YL8
• SIMATIC PDM Complete Software Update Service	6ES7658-3XX02-0YL8
• S7-PLCSIM Software Update Service	6ES7841-0CA01-0YX2
SUS Compact	
SIMATIC PCS 7 Software Update Service, Compact Subscription for 1 year with automatic extension; requirement: Current software version; goods delivery	
• PCS 7 Software Update Service for OS Single Station	6ES7658-2AX00-0YM8
• PCS 7 Software Update Service for OS Server	6ES7658-2BX00-0YM8
• PCS 7 Software Update Service for OS Client, SFC Visualization	6ES7658-2CX00-0YM8
• PCS 7 Software Update Service for SIMATIC BATCH Server/Single Station	6ES7657-0SA00-0YM8
• PCS 7 Software Update Service for SIMATIC BATCH Client	6ES7657-0XX00-2YM8

Selection and ordering data (continued)

SUS Download	
SIMATIC PCS 7 Software Update Service, Download Subscription for 1 year with automatic extension; requirement: current software version; delivery form: online Note: Email address required!	
• PCS 7 Software Update Service for Engineering AS/OS	6ES7658-1XX00-0YV8
• PCS 7 Software Update Service for OS Single Station	6ES7658-2AX00-0YV8
• PCS 7 Software Update Service for OS Server	6ES7658-2BX00-0YV8
• PCS 7 Software Update Service Process Historian, Information Server	6ES7652-7XX00-0YV8
• PCS 7 Software Update Service for OS Client, SFC Visualization	6ES7658-2CX00-0YV8
• PCS 7 Software Update Service for Web Server	6ES7658-2GX00-2YV8
• PCS 7 Software Update Service for Maintenance Station	6ES7658-7GX00-0YV8
• PCS 7 Software Update Service for SIMATIC BATCH Server/Single Station	6ES7657-0SA00-0YV8
• PCS 7 Software Update Service for SIMATIC BATCH Client	6ES7657-0XX00-2YV8
• PCS 7 Software Update Service for SIMATIC Route Control	6ES7658-7DX00-0YV8
• SIMATIC PDM Basic Software Update Service	6ES7658-3XX01-0YV8
• SIMATIC PDM Complete Software Update Service	6ES7658-3XX02-0YV8

© Siemens AG 2024

Overview

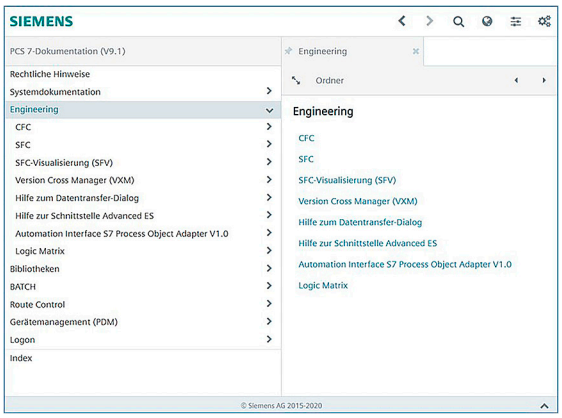

PCS 7 online help is supplied with SIMATIC PCS 7. This is made available in the Plant and User Documentation Manager, a modern content delivery portal. It can be accessed via the Desktop as well as via the SIMATIC Manager. It is possible to add additional SIMATIC PCS 7 documents to the provided documentation specific to the user.

The SIMATIC PCS 7 documentation is provided free of charge and in multilingual form on the Internet via the **My Documentation Manager**.

My Documentation Manager not only enables you to view documents, you can also collect them in your own library and generate your own documents. Information about using these functions as well as FAQs are available in My Documentation Manager.

The SIMATIC PCS 7 system documentation provides both beginners and experienced users with valuable information on all aspects of the process control system. The range extends from the system introduction, covers initial steps and cross-system topics, up to a description of individual system components. With the "Getting Started" documentation you can gain initial practical experience using example projects.

In order to use this, select the manuals for your SIMATIC PCS 7 version on the website for SIMATIC PCS 7 technical documentation:

http://www.siemens.com/pcs7-documentation

You can open the available SIMATIC PCS 7 manuals directly in the My Documentation Manager, or first start the My Documentation Manager and then select the desired documentation in the integrated Siemens library.

In addition to the SIMATIC PCS 7 system documentation, the Siemens library in the My Documentation Manager provides access to the technical documentation of other products and systems from the SIMATIC range of products.

Latest information on SIMATIC PCS 7 in the Readme file

The PCS 7 online Readme files can also be opened at the Internet address provided above. There you will find information on the approved operating systems for PCS 7 software, for example. On the "Technical Documentation SIMATIC PCS 7" page, select "Software Manuals SIMATIC PCS 7 V10.0". All PCS 7 Readme files in Siemens Industry Online Support can be opened on the following page.

More information

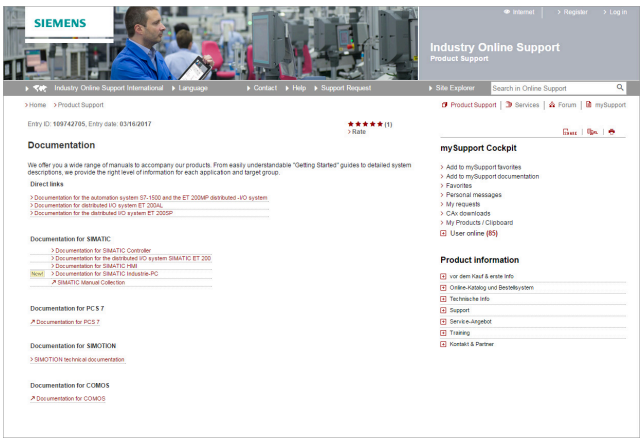

The "SIMATIC documentation" page site in Siemens Industry Online Support directs you straight to the complete range of technical documentation available for SIMATIC products and systems. You can select individual documents from this range for viewing or downloading.

Additional information is available on the Internet at:

http://www.siemens.com/simatic-docu

© Siemens AG 2024

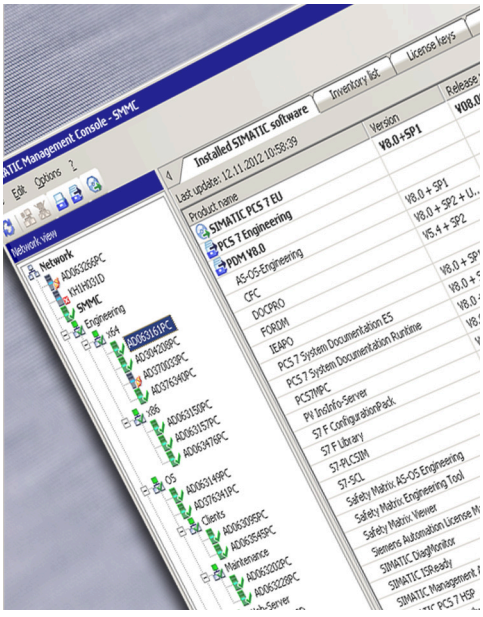

© Siemens AG 2024

Overview

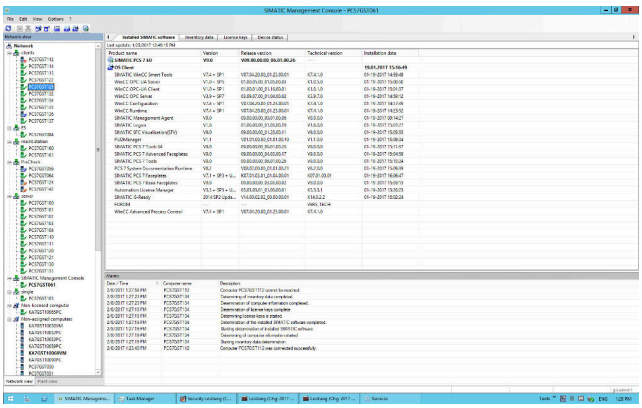

SIMATIC Management Console: Overview of installed software status

A process control system includes numerous heterogeneous components with specific parameters and settings. It is also subject to a dynamic change process due to updates, upgrades as well as modernization measures and expansion. As the plant gets older, it becomes more difficult for you to keep track of the current state of hardware and software. What is more, establishing and maintaining transparency without system support is very time-consuming.

The SIMATIC PCS 7 Management Console enables you to reduce the work for managing your SIMATIC PCS 7 plant to a minimum. You also have the latest status of the installed hardware and software components immediately at hand.

SIMATIC PCS 7 Management Console enables:

- Centralized, standardized administration of SIMATIC PCS 7 software
- Inventory of all installed hardware and software components of the SIMATIC PCS 7 plant

© Siemens AG 2024

Design

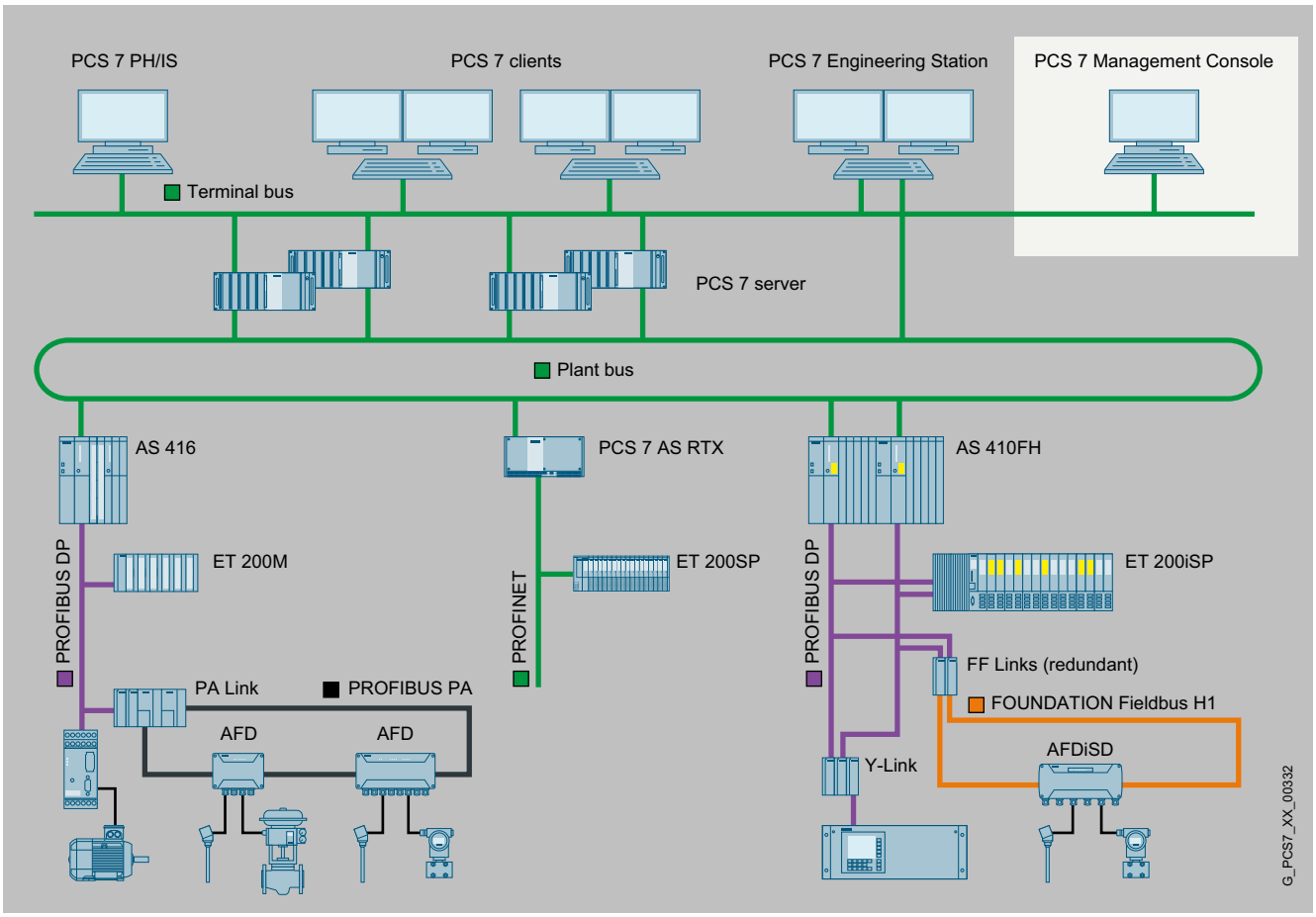

Example of a SIMATIC PCS 7 plant with a stand-alone SIMATIC PCS 7 Management Console

The SIMATIC PCS 7 Management Console enables you to manage either individual SIMATIC PCS 7 plants or multiple plants of a SIMATIC PCS 7 plant network.

For small and medium-sized SIMATIC PCS 7 plants with up to 25 workstations, the SIMATIC PCS 7 Management Console can be installed and operated on a SIMATIC PCS 7 engineering station.

For medium-sized and large SIMATIC PCS 7 plants and SIMATIC PCS 7 plant networks with a total of more than 25 workstations, however, we recommend a stand-alone SIMATIC PCS 7 Management Console. For the single-station or server versions of SIMATIC PCS 7 Industrial Workstation that are suitable as the basic hardware for such an exclusive SIMATIC PCS 7 Management Console, see "Industrial Workstation/IPC".

The central SIMATIC PCS 7 Management Console communicates with "agents" on the relevant SIMATIC PCS 7 Industrial Workstations in a SIMATIC PCS 7 plant. These Management Console agents run local SIMATIC PCS 7 Management Console jobs and return the results.

Secure authentication of communication between the SIMATIC PCS 7 Management Console and the Management Console agents is ensured by the Kerberos protocol.

Note:

A reduced range of services of the Management Console, which enables inventory, can be used without licenses. To make use of the full scope of performance of the Management Console, in addition to a "SIMATIC PCS 7 Management Console" license an additional "Management Console Agent" license is required for each SIMATIC PCS 7 Industrial Workstation managed using Management Console. The Management Console Agents are available in cumulative sets with 10, 50 and 100 licenses. Unlimited use of the system inventory function is possible even without licenses.

© Siemens AG 2024

Function

Central administration of SIMATIC PCS 7 software

The central administration of the software versions of all stations of a SIMATIC PCS 7 system significantly reduces the administrative effort. SIMATIC PCS 7 installations, updates and Service Packs are subject to administration. In addition to the current SIMATIC PCS 7 software version, upgrades to the current software version are supported. The software can be installed on an individual target station or on multiple target stations in parallel using setup packages. The installation on the target station does not require active participation of the user. Thanks to the upstream security mechanisms, unintended adverse effects on runtime operation can be prevented.

Setup management

- Provision of SIMATIC PCS 7 installation files on a dedicated file server or combined on the SIMATIC PCS 7 Management Console
- Addition/removal of SIMATIC PCS 7 setups in the central setup management of the SIMATIC PCS 7 Management Console
- Creation of pre-configured setup packages based on plant/user-specific aspects (e.g. OS Client package)
- Display and editing of SIMATIC PCS 7 setups and setup packages for preparing for installation
- Rollout of pre-configured setup packages to target stations
  - Addition of software packages during installation
  - Editing of setups or setup packages

Status monitoring of the target stations

- Check of target stations for installation readiness by determining and displaying the operating state or role (e.g. OS runtime active/inactive, redundancy mode)
- Implicit, remote disabling of a station in preparation for the start of a SIMATIC PCS 7 update installation
- Status monitoring of the entire SIMATIC PCS 7 installation (e.g. resumption of the installation after restart or network interruption)
- Implicit, remote enabling of a station after completion of a SIMATIC PCS 7 update installation

Installation of Microsoft software updates

Provided there is an existing connection to a Microsoft WSUS that provides Microsoft software updates, the Management Console supports the central installation of Microsoft software updates on all administered computers. Comparable to the rollout of SIMATIC PCS 7 software, the updates can be installed on individual computers or on several computers simultaneously in parallel.

MS Defender Antivirus messages

MS Defender events on target computers are recorded on the Management Console, even if no SMMC user is logged in at the time. Depending on the importance of the events, a notification is sent by email, immediately or at fixed times, to one or more email recipients. Regular reports with MS Defender events covering a definable period of time can be automatically generated as an Excel file via a scheduler.

SIMATIC PCS 7 system inventory

General inventory taking of installed hardware and software components from a central location offers the following advantages, for example:

- Quick analysis of the installed components as preparation for replacement actions or upgrades
- Simple creation of a detailed inventory report

The SIMATIC PCS 7 system inventory spans all levels of a SIMATIC PCS 7 system (management level, control level, field level). It covers

Function (continued)

SIMATIC PCS 7 system components in the named levels, e.g. SIMATIC PCS 7 workstations, Industrial Ethernet switches, automation systems (controllers), remote I/Os, links, field devices, drives, etc. For the AS 410 automation systems configured in the SIMATIC PCS 7 system, the number of available and used process objects is also determined in the inventory.

SIMATIC PCS 7 system inventory includes:

- Central acquisition of inventory data by reading it from the database of the SIMATIC PCS 7 engineering system or directly from the components
- Generation of an inventory report in Microsoft Excel format
  - Combination of filter results with user-defined categories
  - Colored marking of filtered data
- Generation of an inventory report in iBase format
  - Upload of inventory data to the central database for Service and Support
- Comparison with the latest software version
- Comparison with the latest hardware and firmware version
- Creation of a license certificate in the form of a list of installed software licenses and their uses

© Siemens AG 2024

Selection and ordering data

SIMATIC PCS 7 Management Console V10.0 5 languages (English, German, French, Italian, Spanish), software class A, runs with Windows Server 2019/2022 Standard Edition (see SIMATIC PCS 7 Readme for the latest information[1]), single license for 1 installation Without SIMATIC PCS 7 Software Media Package	
• Goods delivery License key on USB flash drive, Certificate of License	**6ES7658-5BX78-2YB5**
• Online delivery License key download, online Certificate of License : Email address required!	**6ES7658-5BX78-2YH5**
Management Console Agents[2] Independent of language, software class A, floating license for 1 user Without SIMATIC PCS 7 Software Media Package	
• Goods delivery License key on USB flash drive, Certificate of License	
- 10 agents	**6ES7658-5BA00-2YB5**
- 50 agents	**6ES7658-5BB00-2YB5**
- 100 agents	**6ES7658-5BC00-2YB5**
• Online delivery License key download, online Certificate of License : Email address required!	
- 10 agents	**6ES7658-5BA00-2YH5**
- 50 agents	**6ES7658-5BB00-2YH5**
- 100 agents	**6ES7658-5BC00-2YH5**

1) See "Software Media and Logistics" section, under "System documentation"
2) An agent is required for each SIMATIC PCS 7 Industrial Workstation managed by the Management Console.

© Siemens AG 2024

Engineering system

3

3/2	**Introduction**
3/3	**ES software**
3/5	Standard engineering software
3/15	SIMATIC PCS 7 Logic Matrix
3/16	SIMATIC Version Cross Manager
3/17	Version Trail
3/18	Import/Export Assistant
3/19	**Simulation**
3/19	Simulation with S7-PLCSIM
3/20	SIMIT Simulation
3/20	SIMIT Simulation Platform
3/27	SIMIT Unit
3/30	Virtual Controller

© Siemens AG 2024

Overview

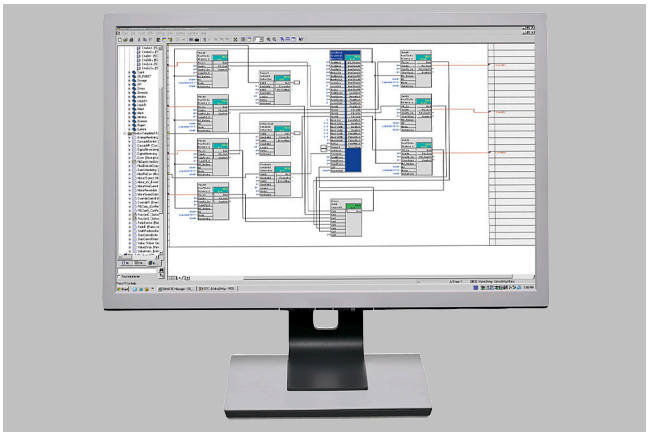

The engineering system of the SIMATIC PCS 7 process control system is based on the high-performance SIMATIC PCS7 Industrial Workstation, which can be used either in office applications or in industrial environments.

The engineering software run on this hardware can be optimally matched to different customer requirements and tasks. The basic functionality defined by the standard engineering software can be optionally expanded depending on the project-specific task and its implementation.

The software licenses provided for the engineering system can be used to configure two system variants for different applications areas:

- **Classic, dedicated engineering station**

  allows in addition to engineering a 2-hour OS test mode, but no productive operation as an operator station

- **Combined engineering/operator station for small applications**

  allows in addition to engineering also process control for small plants in productive operation

Design

The architecture of the Engineering System depends on how the SIMATIC PCS 7 project is processed:

- Locally, on a central Engineering Station
- In the engineering network (concurrent engineering)

Central Engineering Station

Hardware platform for the central Engineering Station is the **SIMATIC PCS 7 Industrial Workstation for ES/OS single station**. This is based on a SIMATIC IPC of Rack PC design which is prepared for installation in 19" rack systems. Two variants are available for communication link to the Industrial Ethernet plant bus:

- Communication over BCE

  Connection to plant bus with 10/100/1 000 Mbps RJ45 network adapter and Basic Communication Ethernet (BCE) for communication with up to 8 automation systems (no redundancy stations)

- Communication over Industrial Ethernet

  Connection to plant bus with CP 1623/1628 communications module for communication with up to 64 automation systems

Two onboard 10/100/1 000 Mbps Ethernet RJ45 ports are available for connecting to the terminal bus.

The Microsoft Windows 10 operating system and the SIMATIC PCS 7 engineering software for AS/OS are pre-installed on the SIMATIC PCS 7 Industrial Workstation on delivery. The scope of performance of the pre-installed SIMATIC PCS 7 engineering software is defined by installation of the purchased software licenses.

Engineering network

With concurrent engineering in an engineering network, the project is localized on one of the participating Engineering Stations, the "Project server". The Engineering Stations working as "project clients" can access the project server data over LAN/WAN. Every Engineering Station in the network (project server/client) is able to download configuration data to a SIMATIC PCS 7 subsystem provided it has the required communication connections.

In this architecture, it is sensible to install the project server on a **SIMATIC PCS 7 Industrial Workstation for OS servers.** The Microsoft Windows Server operating system and the SIMATIC PCS 7 OS Software server are pre-installed on this when delivered (scaling/expansion of SIMATIC PCS 7 installation required).

Two variants are also available for the communication link to the Industrial Ethernet plant bus with the SIMATIC PCS 7 Industrial Workstation for OS servers:

- Communication over BCE

  Connection to plant bus with 10/100/1 000 Mbps RJ45 network adapter and Basic Communication Ethernet (BCE) for communication with up to 8 automation systems (no redundancy stations)

- Communication over Industrial Ethernet

  Connection to plant bus with CP 1623/1628 communications module for communication with up to 64 automation systems

With the SIMATIC PCS 7 Industrial Workstation for ES/OS single stations, you can use the same hardware platform for the project clients as for the central Engineering Station.

Configuration can be made easier by multi-monitor mode with up to 4 process monitors, both for a central Engineering Station and for individual stations in an engineering network.

See section "Industrial Workstation/IPC" for ordering data and detailed information on the scope of delivery and technology of the SIMATIC PCS 7 Industrial Workstations as well as available options/expansions.

© Siemens AG 2024

Overview

The functionality of the engineering system is largely covered by the standard engineering software. The following software options are available in addition for special functions:

- SIMATIC PCS 7 Logic Matrix
- SIMATIC Version Cross Manager
- SIMATIC Version Trail
- SIMATIC PCS 7 Plant Automation Accelerator
- SIMATIC PCS 7 Import/Export Assistant
- SIMATIC PDM Process Device Manager for SIMATIC PCS 7 (see "Plant device management")
- Engineering Process Safety (see Section "Safety Integrated for Process Automation")
- SIMATIC PCS 7 Maintenance Station Engineering (see section "Plant Device Management")
- SIMATIC Route Control Engineering (see section "Route Control")
- SIMATIC PCS 7 TeleControl OS Engineering (see Technology components, "Telecontrol technology" in the ST PCS 7 T catalog)
- SIMATIC PCS 7 PowerControl OS Engineering (see Technology components, "Switchgear automation" in the ST PCS 7 T catalog)
- S7-PLCSIM for the functional testing of CFC/SFC programs

© Siemens AG 2024

Design

SIMATIC PCS 7 Engineering System									
Versions		Classic, exclusively engineering station						Combined engineering/operator station for small applications	
Productive operation as an operator station possible		–						●	
Version		Project server		Project client		Single station		Single station	
		BCE	IE	BCE	IE	BCE	IE	BCE	IE
SIMATIC PCS 7 Industrial Workstation incl. operating system									
Industrial Workstation for ES/OS single station	BCE communication[1]	–	–	●	–	●	–	●	–
	IE communication	–	–	–	●	–	●	–	●
Industrial Workstation for OS server	BCE communication[1]	●	–	–	–	–	–	–	–
	IE communication	–	●	–	–	–	–	–	–
Additional Industrial Ethernet communications software									
SIMATIC NET HARDNET-IE S7 REDCONNECT PowerPack for IE communication with redundant automation systems (additive to SIMATIC NET HARDNET-IE S7)		–	●	–	●	–	●	–	●
Standard engineering software, alternatives									
SIMATIC PCS 7 Engineering Software, unlimited POs	AS and OS, incl. 2-hour OS test mode	●		●		●		–	
	AS	●		●		●		–	
SIMATIC PCS 7 ES single station, with 250 AS/OS Runtime POs		–		–		–		●	
Supplementary engineering software (optional)									
• SIMATIC PCS 7 Logic Matrix									
• Version Cross Manager									
• Version Trail									
• SIMATIC PCS 7 Plant Access Accelerator									
• Import/Export Assistant									
• Engineering Process Safety (SIMATIC S7 F Systems, SIMATIC S7 Safety Matrix Tool)									
• PCS 7 Maintenance Station Engineering									
• SIMATIC Route Control Engineering									
• SIMATIC PDM									
• SIMATIC PCS 7 TeleControl OS Engineering[2]									
• SIMATIC PCS 7 PowerControl OS Engineering[2]									
• Simulation with S7-PLCSIM									

Hardware and software components of the engineering system, as well as possible configurations
[1] Basic Communication Ethernet (BCE) for up to 8 automation systems (no redundant systems)
[2] Products can be found in Catalog ST PCS 7 T, SIMATIC PCS 7 technology components

Note on Microsoft SQL Server software

The "SQL Server" software from Microsoft which is delivered together with SIMATIC PCS 7 is exclusively intended for this process control system. It must not be used in any other context without previous written approval by Siemens.

© Siemens AG 2024

Overview

The standard engineering software provides the basic functionality for configuration of SIMATIC PCS 7 plants with:

- Automation systems
- Process I/O
- Field devices
- Communication networks
- Operator systems
- Maintenance station
- SIMATIC BATCH
- SIMATIC Route Control
- SIMATIC PCS 7 TeleControl
- SIMATIC PCS 7 PowerControl

Licensing of the standard engineering software depends on use of the engineering station as:

- Classic, dedicated engineering station (not suitable for productive operation as an operator station)
- Combined engineering/operator station for small applications (suitable for productive operation as an operator station)

Application

Classic, exclusive engineering station with unlimited number of process objects for engineering (Engineering unlimited POs)

Two software versions with unlimited engineering POs are available for the classical engineering station:

- AS/OS – for engineering of automation systems (AS) and Operator Systems (OS)
- AS – only for AS engineering

With the AS/OS software version, the OS configuration can be tested in an OS test mode limited to 2 hours. This OS test mode is not suitable for productive operation. After 2 hours, the engineering station automatically switches to demonstration mode.

Rental License

A 30-day or 50-hour rental license for AS engineering (unlimited POs) gives you a cost-effective alternative for short-term projects or short-term capacity bottlenecks.

The licenses for 30 days and 50 hours differ as follows with regard to runtime billing:

- With the 30-day license, the uninterruptible timer starts at the time of first usage. Time billing is thus independent of usage.
- With the 50-hour license, only the actual period of use is billed. The timer stops when the SIMATIC PCS 7 application is exited, and restarts when the application is opened again.

Combined engineering/operator station for small applications

The combined engineering/operator station is designed to support compact process control plants. This combines an unlimited AS/OS Engineering license (unlimited POs) with an AS/OS Runtime license for 250 POs. These licenses can only be used together on a station. It is not possible to separate the Engineering and Runtime licenses for use on different stations.

The runtime POs can be expanded with cumulative Runtime licenses:

- SIMATIC PCS 7 AS Runtime license for 100, 1 000 or 10 000 POs, see "Automation systems", "Modular AS 410-5H and AS 410E systems".
- SIMATIC PCS 7 OS Runtime license for 100, 1 000 or 5 000 POs, see "Operator System", "OS software" under "OS standard software for single station/server/client".

Division of work during engineering

To enable engineering to be carried out in the shortest possible time, it is necessary to use resources optimally. The Engineering System of the SIMATIC PCS 7 process control system not only supports uniform engineering of the project on an engineering station but also provides various options for dividing the work.

Concurrent Engineering

With Concurrent Engineering multiple project engineers can work concurrently on one project in CFC and SFC, without having to split the project up into sub-projects beforehand. During commissioning, for example, charts can be used in the online (debug) mode and at the same time changes can be made to the project. The Graphics Designer supports parallel working on a project even when creating process pictures.

The project is localized on one of the participating engineering stations, the "project server". The engineering stations working as "project clients" can access the project data via LAN/WAN. A specific chart can be found very quickly using a cross-project search function.

CFC and SFC charts can be opened and viewed by several project engineers concurrently. However, the system rejects concurrent write accesses to the database. If the project engineer attempts to

© Siemens AG 2024

Application (continued)

access a chart which is already being used, a corresponding warning is output in a dialog window.

Every engineering station in the network (project server/client) is able to download configuration data to a SIMATIC PCS 7 subsystem provided it has the required communication connections.

Multiproject Engineering

Multiproject engineering allows a complex project to be divided into multiple subprojects in accordance with technological criteria so that several different teams can work on the project in parallel. To achieve this, a host "Multiproject" is defined in the SIMATIC Manager. The individual projects can be added or removed from a multiproject at any time. Similarly, projects can be divided or combined (Branch & Merge).

The subprojects in a multiproject are stored on a central server and moved to the local engineering stations for editing. The engineering performance is then not affected by network access.

Central configuration functions for multiprojects help to reduce the configuration overhead. For example, a hierarchy folder can be created in the current project and also automatically in all other projects. It cannot be modified there, but objects can be inserted. All block types used in a multiproject can also be updated centrally.

© Siemens AG 2024

Function

Essential tools of the standard engineering software and their functions:

SIMATIC Logon

SIMATIC Logon is a user administration and access control function integrated in the engineering system. Together with the detailed recording facilities provided by the change log, SIMATIC Logon offers plant owners exceptional system support when verifying changes.

Using SIMATIC Logon, the administrator can assign specific access privileges to groups of users, thus controlling the possibilities for data access. Access rights for stations of the process control system and operator privileges for blocks can both be set up. Configurable change logs permit the recording of all access operations to the engineering system as well as all online changes concerning the automation systems, Operator Systems, SIMATIC BATCH or SIMATIC Route Control.

If the modification reports are linked to the data of SIMATIC Logon during evaluation, it can be clearly proven who has carried out a specific modification and at what time. Such verifications are often the object of special sector-specific requirements, formulated, for example, in FDA 21 CFR Part 11 or GAMP.

SIMATIC Manager

The SIMATIC Manager is the control center of the engineering system. It is the integration platform for the engineering toolset as well as the configuration basis for all engineering tasks of the SIMATIC PCS 7 process control system. All aspects of the SIMATIC PCS 7 project are created, managed, archived and documented here.

The engineering toolset contains tools which are optimally matched to one another for system-wide project-oriented engineering, and which simultaneously provide the basis for asset management of the I&C equipment. These include tools for effective engineering of the following components:

- Control system hardware including distributed I/O and field devices
- Communication networks
- Automation functionality for continuous and batch processes (AS engineering)
- Operation and monitoring functionality (OS engineering)
- Mass data engineering and cooperation with CAD/CAE planning tools
- Diagnostics and asset management functionality
- Batch processes, automated with SIMATIC BATCH
- Material transport, controlled by SIMATIC Route Control
- Safety applications (Safety Integrated for Process Automation)

Technologists as well as process and production engineers can carry out planning and configuration in their familiar environments when using this range of tools as well as predefined blocks and charts.

The hardware required for use in a SIMATIC project, such as automation systems, communications components and process I/O, is stored in an electronic catalog. The hardware can be configured and parameterized using the HW Config tool.

Creating hierarchy folders implements a project structure, the plant hierarchy (PH). By storing CFCs and SFCs for automation systems and pictures and reports for operator stations in a hierarchy folder along with additional documentation, the configuring engineer implicitly determines the hierarchical assignment.

Function blocks (FBs) and functions (FCs) can be encrypted and decrypted with the S7-Block Privacy application to protect know-how. Following encryption, the blocks and their attributes can no longer be modified. Only the interfaces of the blocks are then visible.

To implement the automation logic, standardized function blocks must be combined with other blocks in the graphic configuration tool CFC according to technological specifications. You can simply select predefined blocks or charts for this purpose from a catalog and then position, graphically interconnect and configure them in the working area. The process tag data relevant to operation and monitoring, such as messages and variables, are generated at the same time. The SIMATIC PCS 7 Logic Matrix can be used for fast and easy creation of the interlock logic between various control modules/equipment modules.

Sequential controls permit control and selective processing of the basic automation functions created per CFC by means of changes in operating mode and status. Convenient editing functions for the graphic configuration of sequential controls as well as powerful test and commissioning functions are offered by the SFC editor.

Complete SIMATIC PCS 7 projects or all project modifications can be compiled in one working step and downloaded to the target systems involved, e.g. to automation systems, Operator Systems or SIMATIC BATCH. The engineering system automatically ensures that the sequence is correct. The procedure is displayed and controlled in a central dialog.

A more effective method for less comprehensive changes to the standard automation, e.g. addition or modification of single process tags, is selective compilation and downloading at chart level. This can be started from the technological hierarchy, from the CFC, or from the chart folder.

The project engineer can recognize all changes since the last download by their color, and the current chart states by means of the corresponding symbols. The project engineer can make a specific choice in a dialog form for selective downloading. In association with the Version Trail, each download is automatically followed by archiving.

In the case of blocks being executed on the AS 410 automation system, it is even possible to change types during runtime by means of seamless copying (TCiR).

The SIMATIC Manager can also be used to organize the project data for engineering of the Operator Systems. All the process tag data relevant to operation and monitoring is generated when the automation function is defined. A powerful Graphics Designer is available for generation of the process pictures. The basis for generating process pictures is provided by static symbols and dynamic block icons and faceplates that are organized in libraries and linked to the parameters of the function blocks.

© Siemens AG 2024

Function (continued)

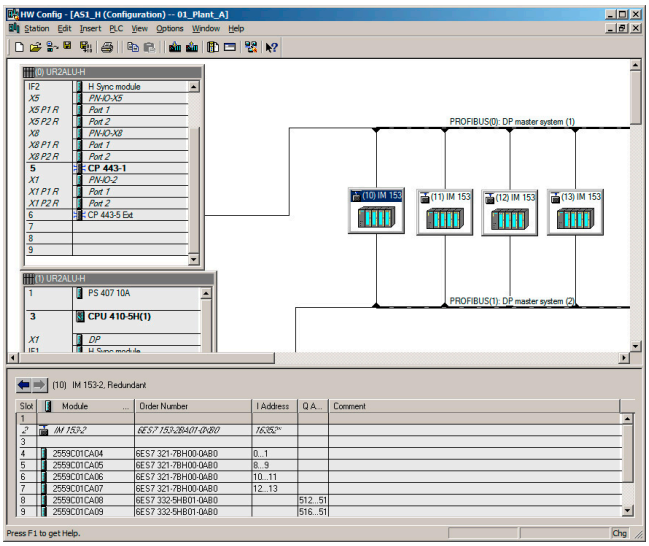

Component view: Hardware configuration in the SIMATIC Manager with HW Config

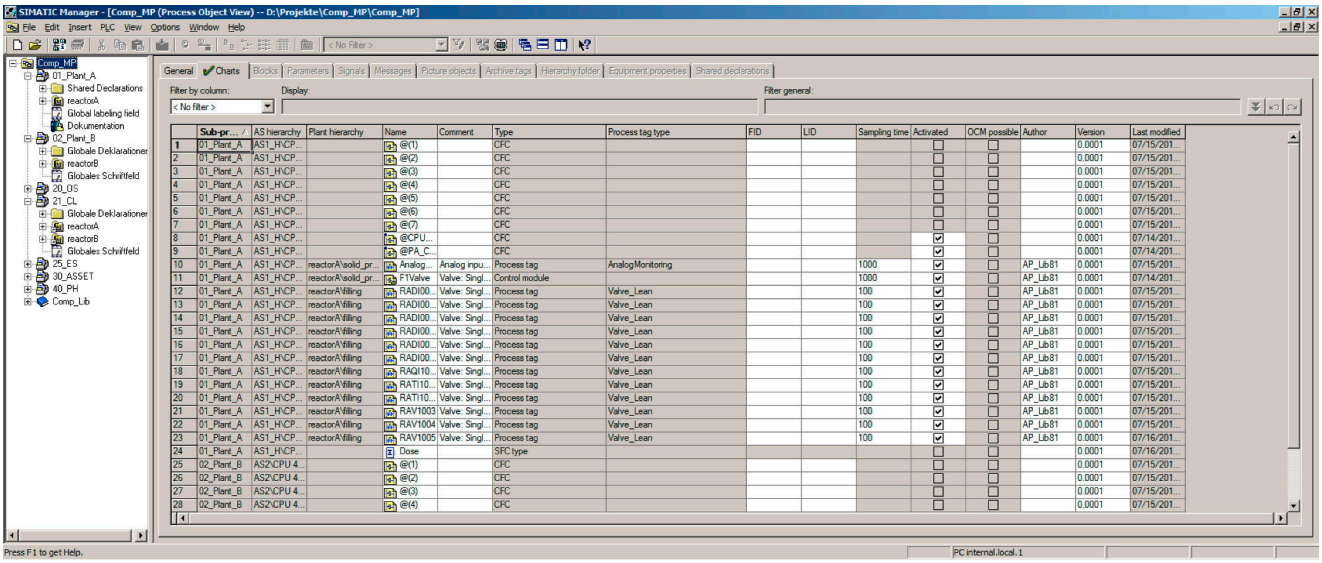

Process tags in the process object view

Project views

The various tasks for creating a plant project are supported by the following project views:

- **Component view (HW Config)**

  for configuration of hardware such as automation systems, bus components or process I/O

- **Process object view**

  as the central development environment for all aspects of process tags/objects

The process object view supports the work carried out by a process engineer by providing a universal view of the process tag. It shows the plant hierarchy represented in tree form in combination with a tabular view of all aspects of the process tag/object (general, charts, blocks, parameters, signals, messages, picture objects, archive variables, hierarchy folders, equipment properties and global declarations). This provides the technologist with fast orientation.

All objects in the marked branch of the hierarchy are displayed in the table so that they can be directly processed with user-friendly edit, filter, replace, import and export functions. A special test mode offers the facility for testing process tags and CFCs online and for starting them up.

The OS areas and the image hierarchy for process control, as well as the SIMATIC PCS 7 asset management, can be derived from the technological hierarchy. Furthermore, it also forms the basis for the plant-oriented identification of process objects.

Common displays can be positioned in pictures by means of the image hierarchy, and automatically linked to lower-level images.

© Siemens AG 2024

Function (continued)

The configuration engineer is only responsible for the correct positioning. Since the number of common display fields and their semantics can be configured, it is also possible to implement customized alarm configurations.

I&C and process messages are already pre-configured in the function blocks, and operator input messages are already pre-configured in the faceplates. These are automatically generated when the triggering event occurs. If required, message texts can be modified or message priorities defined.

Using the process object view, "Smart Alarm Hiding" can also be configured. This refers to the dynamic hiding of alarms that are of secondary importance to the safe and interference-free operation of the plant under certain plant conditions. Depending on the operating status of a plant unit (startup, service etc.), messages of the technological blocks grouped in this plant unit are shown or hidden in accordance with the previously set configuration. Alarms can be displayed or hidden separately for each of the maximum 32 operating states through selection of check boxes in the alarm matrix of the process object view. Although hidden alarms are not signaled visually and audibly, they are still logged and archived as before.

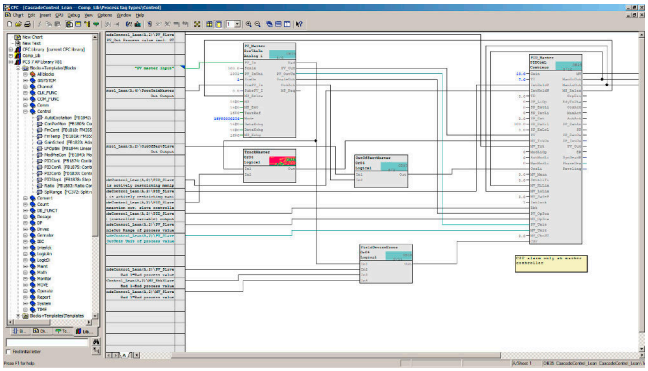

Continuous function chart

Continuous function chart (CFC)

The CFC editor permits graphic configuration of the continuous automation functions. In addition to convenient editing functions, its scope of functions also includes powerful test and commissioning functions as well as individually configurable documentation functions.

When creating a new CFC, a new runtime group with the same name as the chart is created. All the blocks that are subsequently entered in the chart are automatically added to this runtime group. Each block is therefore already assigned runtime properties when it is inserted, and configuration engineers can optimize these properties by means of modifications in the runtime editor or by using algorithms.

The algorithm first determines the optimum block sequence separately for each runtime group, and then the optimum sequence of runtime groups.

Instances of function block types can be positioned on CFCs, assigned parameters, and interconnected. Operator privilege levels can already be defined at block level for each block attribute so that finely granular operator privileges can be implemented.

Additional potential for rationalization is offered by special configuration techniques such as chart-in-chart for implementing hierarchical charts, or the multiple use of chart block types (individual control unit types and process tag types) or SFC types (standardized sequence controls) in the form of instances.

The CFC editor supports the following types of standardized software modules:

- **Function block type**

  The function block types supplied with I&C libraries are used for I&C modeling of engineering equipment such as valves or motors. The smallest standardized software modules for multiple usage have connections for actuating and control signals and for parameter assignment and monitoring functions. Some also contain interlocking functions for automatic transition to defined safety settings.

- **Process tag type**

  Process tag types implemented with function blocks each represent a standardized CFC for the basic automation of specific I&C functions, e.g. for a level controller. Their instances can be modified centrally by the type-instance concept, and also manually adapted and linked.

- **Control module type**

  The control module type (CMT) marks a new type of standardized software module that offers even more efficient engineering than classic process tag types. A CMT can contain blocks, charts, control variables (block I/Os such as signals and parameters) and messages.

  : As the function "Control module adjustment" is based on a basic functionality of the Version Cross Manager (VXM), you need a VXM license to use this function. In the absence of a license, a message appears telling you to install Version Cross Manager. This is not actually necessary, all you need to install is a valid VXM license that will enable the relevant functionality on the engineering station.

Note:

The CFC is not just a component in the standard engineering software of the SIMATIC PCS 7 process control system. As a separate product, it can also be used together with other SIMATIC products in the context of Totally Integrated Automation (TIA). This SIMATIC CFC is a component from the ST 70 catalog, "SIMATIC Software" (article number of the current SIMATIC CFC V10.0, for goods delivery: 6ES7658-1EX78-0YA5; for online delivery: 6ES7658-1EX78-0YH5).

© Siemens AG 2024

Function (continued)

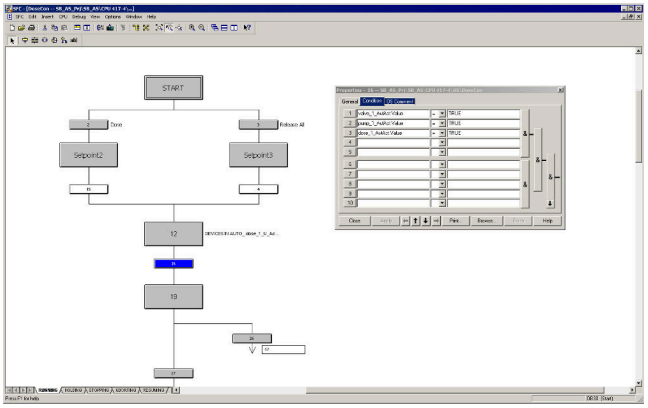

Sequential function chart

Sequential function chart (SFC)

The SFC editor is used for the graphical configuration and commissioning of sequential controls for batch production operations. It possesses convenient editing functions as well as powerful test and commissioning functions. An integrated graphical formula editor for arithmetic operations, Boolean algebra and mathematical functions enables calculations within the SFC.

Using a sequential control, basic automation functions usually created using CFC are controlled and selectively processed by means of changes in operating mode and status. Depending on the subsequent use, the sequential controls can be created either as an SFC plan or SFC type.

SFC plan

The SFC can be used to implement sequence controls which can be applied once and which access several partial areas of the production plant. Each SFC has standardized inputs and outputs for status information and for control by the user program or the user. The SFC plan can be positioned and linked as a block in the CFC. The required CFC block connections are selected by simple operations and connected to the steps or transitions of the step chains. A status management conforming to ISA 88 enables the configuration of up to 8 separate sequencers within a single SFC, e.g. for states such as RUNNING, HOLDING or ABORTING, or for different operating modes.

SFC type

SFC types are standardized sequential controls which can be applied repeatedly and which access one partial area of the production plant. They can be organized in libraries, and handled like normal function blocks, i.e. they can be selected from a catalog and positioned, interconnected and configured as an instance in a CFC plan.

Changes to the original automatically result in corresponding changes in all instances. An SFC type may contain up to 32 sequences. Using the function "Create/update block symbols", a block symbol is automatically positioned and interconnected in the associated process picture for all SFC instances with HMI features.

I&C libraries

The use of library elements plays a major role in minimizing the amount of engineering required and thus also the project costs.

Two process control libraries are integrated in the standard engineering software of SIMATIC PCS 7:

- Advanced Process Library (current standard, pre-installed)
- PCS 7 Standard Library (former standard, can be installed subsequently if required)

Pre-configured and tested blocks, faceplates and symbols are organized in these libraries and form the basic elements for the graphic configuration of automation solutions.

The comprehensive range of blocks can be categorized as follows:

- Blocks for mathematical operations, analog and digital logic
- Interlocking modules
- Technological function blocks with integral display, operation and signaling functions, e.g.:
  - Standard Control and Advanced Process Control blocks
  - Motor and valve blocks
  - Counter blocks
  - Dosing block
- Blocks for the integration of field devices
- Operator control and monitoring blocks
- Message and diagnostics blocks

Furthermore, pre-configured process tag types for process equipment such as pumps, valves, dosing units and controllers (cascade, spit-range) etc. extend the scope of library elements.

This is advantageous for adaptation of the user software following a system upgrade so that multiple versions of a library can exist side by side.

© Siemens AG 2024

Function (continued)

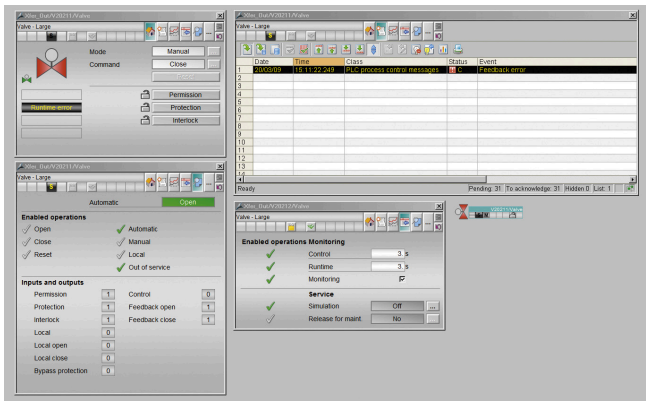

Examples of OS standard faceplates from the SIMATIC PCS 7 Advanced Process Library, valves

Advanced Process Library

The Advanced Process Library (APL) based on many years of experience of project engineers and plant owners takes into consideration current NAMUR recommendations and PNO specifications. Proven functions as well as visually attractive GUIs for a high level of operator convenience facilitate and also force interaction of operators with the plant.

Alternative, small variants of function blocks reduced to core functions, whose block icons and faceplates occupy less space in the process picture, improve clarity in complex process pictures.

Other features worth mentioning are:

- Special operating modes:
  - "Local" for integration and application of local control options
  - "Out of service" for deactivating a process tag for maintenance and service
- Several faceplate views:
  - "Preview" with information on the I/O signal status, automatic control, and possible/permissible operator inputs; display of real value for simulation
  - "Memo view" for temporary operator information
- Convenient interlocking modules with initial signal information, can be directly called from the technological function blocks, e.g. from a motor block
- Flexible adaptation of functions in the library blocks
- Commissioning support through direct simulation on the operator station
- Protection against operator errors as the result of detailed grading of user privileges
- Explicit enabling/disabling of operations for a process tag for individual operator stations of the plant using the function "Local operator enabling"
- Integration of any compact drives and switch/starter objects via standard PROFIBUS profiles
- Coordination of multiple access operations, e.g. of SFC/SIMATIC BATCH, to equipment such as valves, dosing units or pumps
- Tacking of operator input windows facilitates repeated, successive operations
- Browser for the process tag selection by status
- Customized online trends for display
- Reduced operator workload and faster operator control with process tag groups assembled online for standard situations

  :

  SIMATIC PCS 7 Advanced Process Graphics from catalog ST PCS 7 T (SIMATIC PCS 7 technology components) is required.

Technology libraries

The additional technology libraries "Industry Library" and "Condition Monitoring Library" offered in Catalog ST PCS 7 T (SIMATIC PCS 7 technology components) expand the standard functionality of the APL. All display icons, function blocks and faceplates of these libraries are in APL design.

The Industry Library contains blocks for:

- Building automation (heating, ventilation, air conditioning)
- Operator control and monitoring using SIMATIC HMI Comfort Panels
- Integration of SIMATIC S7 Package Units and RTUs based on S7-300
- Connection of external Advanced Process Control systems
- Hierarchical multi-control room operation
- Other technological functions, e.g. for expanding measured value monitoring, or specifying a setpoint trend

The Condition Monitoring Library contains blocks for:

- Monitoring of centrifugal pumps (PumpMon)
- Monitoring of control valves (VlvMon)
- Online valve test during operation (PST)
- Monitoring for pressure loss, and early detection of blockages (PressDropMon)
- Detection of steady states of a dynamic process or steady state of a signal

Advanced Process Control (APC) functions

In addition to numerous basic control functions, e.g. PID control, cascade control, split range control and ratio control, the I&C libraries of SIMATIC PCS 7 also provide function blocks and templates for advanced control functions at no extra cost.

© Siemens AG 2024

Function (continued)

Gain scheduling

The GainSched block allows continuous adjustment of the controller parameters in non-linear processes depending on the operating point. The block, which works in a similar manner to the polygon block, can derive three separate output values from one input value (measured variable X), which serve as regulating parameters for an interconnected controller block. Depending on the characteristic of the measured variable X, the GainSched changes the regulating parameters of the combined closed-loop controller in a sliding manner.

Override control

The outputs of two or more controllers are connected to a common final controlling element. The decision concerning which controller actually receives access to the final controlling element is made depending on the evaluation of the current process state.

Lead-lag/feed-forward control

A strong interference which can be measured is compensated in advance by feed-forward control. The control is thus limited to model uncertainties and non-measurable faults.

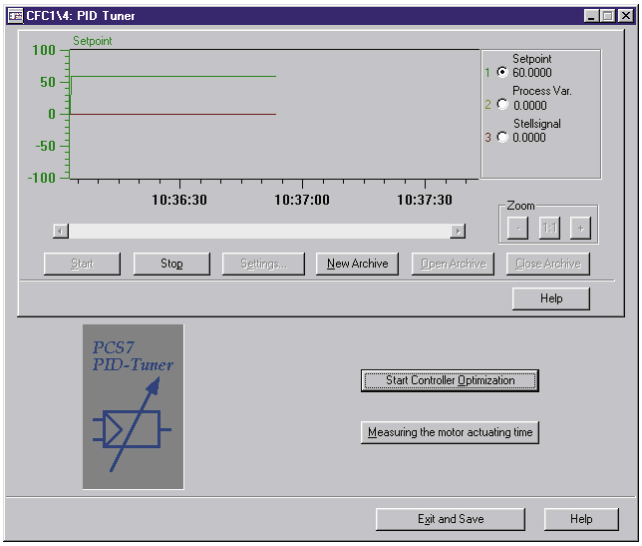

PID tuning

The integrated PID Tuner is suitable for optimization of the CTRL_PID and CTRL_S software controllers in circuits with PID, PI, or P control. On the basis of an experimentally determined model of the controlled system, favorable controller parameters for an optimum disturbance response or an optimum control response of the controller can be determined according to the procedure of absolute value optimization. Optimization can be carried out in manual or automatic mode. The typical controller values (actual value, setpoint, manipulated variable) are recorded by a trend function. The transient response of the controllers with the determined parameters can be checked by defining jumps. The controller parameters can be saved, and recalled as required.

Monitoring of the control quality

The ConPerMon block determines the control quality of a controller block (e.g. PID controller) on the basis of the online data of the setpoint, actual value and manipulated variable. Depending on deviation of the comparison value, e.g. the control quality at commissioning, it can trigger a warning or an alarm. The faceplates of all control quality monitoring of a plant or a plant unit can be summarized in OS screens, which enables problems to be detected early on, analyzed, and specifically corrected.

Smith Predictor

The Smith Predictor can significantly improve the control quality of processes with long and relatively constant dead times. By eliminating the dead time component using a process model running parallel to the actual process, the controller can be designed for a process free of dead time, and thus set more effectively.

Model-based predictive multi-variable control

Model-based predictive multi-variable controllers (MPC) separately analyze the behavior of several interdependent variables for complex processes over a longer period. The results are used for optimized control of these variables. They eliminate adverse interactions which occur with separate control of the interdependent variables. Using a mathematical model of the process dynamics, MPCs are able to predict the future process response over a defined period of time (prediction horizon) and optimize a quality criterion on this basis.

The APL provides two multi-variable controllers with different functionalities and performance:

- MPC4x4 (ModPreCon) for up to 4 coupled manipulated variables and controlled variables
- MPC10x10 for up to 10 coupled manipulated variables and controlled variables and up to 4 measurable disturbance variables

Note:
Model-based multi-variable controllers make high demands on memory and processing time of the designated automation system. For that reason, please check the resources of the designated automation system before using them.

Graphics Designer

The project data for the engineering of the Operator Systems are organized with the SIMATIC Manager. All the data relevant to operation and monitoring of a process tag, such as messages and HMI variables, are generated automatically during definition of the automation function. A powerful graphics designer is available for the generation of process pictures.

© Siemens AG 2024

Selection and ordering data

Standard engineering software	
Runs with the following operating systems (see SIMATIC PCS 7 Readme for the latest information[1]): • Windows 10 Enterprise 2019/2021 LTSC • Windows Server 2019/2022 Standard Edition	
Software for a classic, dedicated engineering station without quantity limitation (not suitable for productive operation as an operator station)	
SIMATIC PCS 7 AS/OS Engineering software V10.0 Unlimited POs, activated for 2-hour OS test mode 5 languages (English, German, French, Italian, Spanish), software class A, floating license for 1 user With SIMATIC PCS 7 Software Media Package	
• Goods delivery License key on USB flash drive, Certificate of License, bundled with 1 × SIMATIC PCS 7 Software Media Package per order item	6ES7658-5AX78-0YA5
• Online delivery License key download and online Certificate of License, combined with SIMATIC PCS 7 Software Media Package (software download and online Certificate of License) : Email address required!	6ES7658-5AX78-0YH5
SIMATIC PCS 7 AS/OS Engineering software ASIA V10.0 2 languages (English, Chinese), software class A, floating license for 1 user With SIMATIC PCS 7 Software Media Package ASIA	
• Goods delivery ASIA license key on USB flash drive and Certificate of License, bundled with 1 × SIMATIC PCS 7 Software Media Package ASIA per order item	6ES7658-5AX78-0CA5
SIMATIC PCS 7 AS Engineering software V10.0 Unlimited POs 5 languages (English, German, French, Italian, Spanish), software class A Without SIMATIC PCS 7 Software Media Package	
• Goods delivery License key on USB flash drive, Certificate of License	
- Floating license for 1 user	6ES7658-1AX78-0YB5
- Rental license for 30 days (time billing independent of use)	6ES7658-1AX78-0YA6
- Rental license for 50 hours (time billing dependent on use)	6ES7658-1AX78-0YB6
• Online delivery License key download, online Certificate of License : Email address required!	

Selection and ordering data (continued)

- Floating license for 1 user	6ES7658-1AX78-0YH5
- Rental license for 30 days (time billing independent of use)	6ES7658-1AX78-0YH6
- Rental license for 50 hours (time billing dependent on use)	6ES7658-1BX78-0YH6
Software for a combined engineering/operator station for small applications (suitable for productive operation as an operator station)	
SIMATIC PCS 7 ES Single Station V10.0 Including 250 AS/OS Runtime POs 5 languages (English, German, French, Italian, Spanish), software class A, single license for 1 installation With SIMATIC PCS 7 Software Media Package	
- Goods delivery License key on USB flash drive, Certificate of License, bundled with 1 × SIMATIC PCS 7 Software Media Package per order item	6ES7651-5AA78-0YA0
- Online delivery License key download and online Certificate of License, combined with SIMATIC PCS 7 Software Media Package (software download and online Certificate of License) : Email address required!	6ES7651-5AA78-0YH0
SIMATIC PCS 7 ES Single Station ASIA V10.0 Incl. 250 AS/OS Runtime POs 2 languages (English, Chinese), software class A, single license for 1 installation With SIMATIC PCS 7 Software Media Package ASIA Goods delivery ASIA license key on USB flash drive, Certificate of License, bundled with 1 × SIMATIC PCS 7 Software Media Package ASIA per order item	
• ASIA	6ES7651-5AA78-0CA0
• SN ASIA (including SOFTNET REDCONNECT)	6ES7651-5AA78-6CA0

[1] See "Software Media and Logistics" section, under "System documentation" You can find more information on the Software Media Package in the section "Software Media and Logistics", subsection "PCS 7 Software Packages"

© Siemens AG 2024

More information

Regional product versions

All SIMATIC PCS 7 software products are designed for international use, in other words there is only one product version for worldwide use and this is offered in up to 6 languages: English, German, French, Italian, Spanish and Chinese. However, the number of supported languages is not standard; it can vary from product to product.

In addition, a regional "ASIA" product version will also be offered for the SIMATIC PCS 7 Software Media Package and specific SIMATIC PCS 7 software products of the "Engineering System" and "Operator System" system components. The ASIA products are available in two languages: English and Chinese (simplified). They are explicitly identified in the name by the suffix "ASIA".

If a product listed in this catalog does not have the suffix "ASIA" in its name, it can always be used globally. However, the following restriction applies: If a regional ASIA product is offered, the pendant for international use does not support the Asian languages (currently Chinese simplified) present in the ASIA product.

The products for international use, i.e. products without the suffix "ASIA", are not intended as the basis for runtime systems with fonts in Asian languages.

The following special points must be observed as a result of the definition of separate products for installation software and licenses. The SIMATIC PCS 7 installation software is available in the form of two data medium packages:

- SIMATIC PCS 7 Software Media Package
- SIMATIC PCS 7 Software Media Package ASIA

The specific ASIA software licenses harmonize exclusively with the SIMATIC PCS 7 Software Media Package ASIA. SIMATIC PCS 7 software licenses for which there is no ASIA pendant can be used with both SIMATIC PCS 7 Software Media Packages.

© Siemens AG 2024

Overview

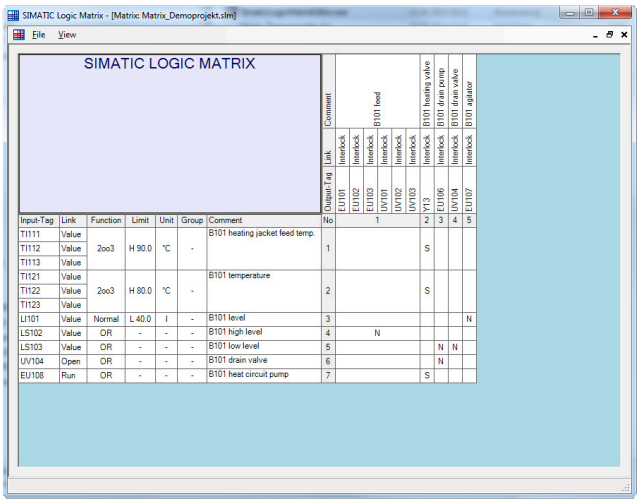

Logic Matrix Editor within the SIMATIC PCS 7 Engineering System

The SIMATIC PCS 7 Logic Matrix is based on the principle of logic creation with a cause and effect matrix—similar to the long-established SIMATIC S7 Safety Matrix for safety-oriented applications. It enables easy creation of the interlock logic between technological functions (e.g. control modules or equipment modules) of the automation project. There is no time-consuming configuring of the interlock logic in the CFC.

The SIMATIC PCS 7 Logic Matrix Tool, which can be opened from SIMATIC Manager, is used to create and edit the Logic Matrix oriented to one controller in each case and then to integrate the created matrix data at the chart level in the CFC project. The APL-based process tag types of the control module are linked with the cause or effect blocks of the Logic Matrix by templates created with the Link Type Editor of the Logic Matrix (Link Types).

The matrix table is comparable to a spreadsheet program. The configuration engineer first enters the possible events (inputs) in the horizontal lines, and then configures their type and number, logic operations, timings, alarms and possible bypass functions. He then defines possible actions (outputs) to these events in the vertical columns. The events and reactions are linked by simply clicking the cell at the intersection of the row and column.

The SIMATIC PCS 7 Safety Matrix Viewer enables operator control and monitoring of the Logic Matrix on the operator station (OS Single Station and OS Client). The Logic Matrix faceplate can also be opened via the faceplates of the technology objects which have been linked together via the cause and effect matrix.

Based on this causal chain, jumps from the Effect faceplate to the Cause faceplate and vice versa are possible via the Logic Matrix faceplate.

Overview (continued)

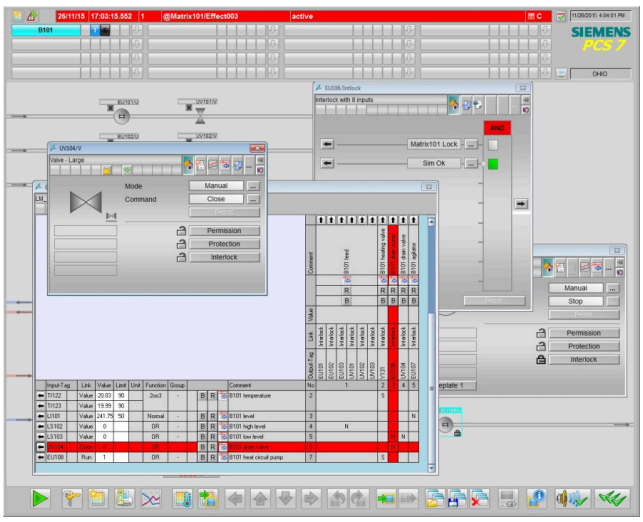

Faceplates of the Logic Matrix and the linked control module in the Logic Matrix Viewer of the SIMATIC PCS 7 Operator Station

Selection and ordering data

SIMATIC PCS 7 Logic Matrix	
SIMATIC PCS 7 Logic Matrix Viewer V10.0 Operator control and monitoring of the SIMATIC PCS 7 Logic Matrix via OS single station/OS client Runtime software, 2 languages (English, German), software class A Runs with the following operating systems (see SIMATIC PCS 7 Readme for the latest information[1]): • Windows 10 Enterprise 2019/2021 LTSC • Windows Server 2019/2023 Standard Edition Single license for 1 installation, without SIMATIC PCS 7 Software Media Package	
• Goods delivery - License key USB flash drive and Certificate of License	**6ES7658-1JB78-2YA0**
• Online delivery - License key download, online Certificate of License	**6ES7658-1JB78-2YH0**

[1] See "Software Media and Logistics" section, under "System documentation"

© Siemens AG 2024

Overview

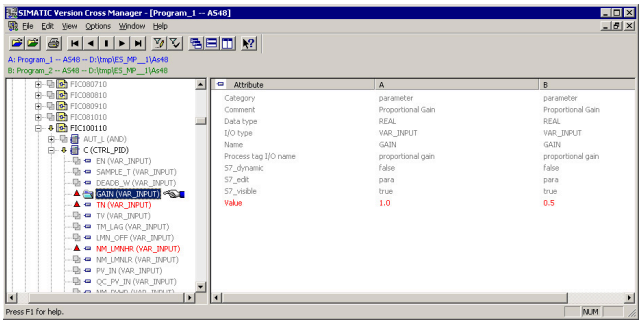

The SIMATIC Version Cross Manager is a user-friendly tool for determining the differences between various versions of individual projects or multiprojects by:

- Tracing missing, additional or differing objects by comparing hardware configuration, communication, plant hierarchy, CFC/SFC charts, SFC details, block types, messages, global tags, signals and run sequences
- Graphic display of comparison results in a combination of tree and tabular formats
- Clear hierarchical structuring according to the technological hierarchy of the plant
- Color-coded identification of the differences

Note:

As the function "Control module adjustment" is based on a basic functionality of the Version Cross Manager (VXM), you need a VXM license to use this function. In the absence of a license, a message appears telling you to install Version Cross Manager. This is not actually necessary, all you need to install is a valid VXM license that will enable the relevant functionality on the engineering station.

Selection and ordering data

SIMATIC Version Cross Manager V10.0 6 languages (English, German, French, Italian, Spanish, Chinese), software class A Runs with the following operating systems (see VXM Readme in the Siemens Industry Online Support for the latest information) • Windows 10 Enterprise 2019 LTSC • Windows 10 Enterprise 2021 LTSC • Windows Server 2019 Standard Edition • Windows Server 2022 Standard Edition Floating license for 1 user, without SIMATIC PCS 7 Software Media Package	
• Goods delivery License key on USB flash drive and Certificate of License as well as TIA Engineering Toolset CD	**6ES7658-1CX78-2YA5**
• Online delivery License key download, online Certificate of License and TIA Engineering Toolset (software download) : Email address required!	**6ES7658-1CX78-2YH5**
Upgrade package (only for TIA applications)	
SIMATIC Version Cross Manager Upgrade from V9.0 to V10.0 6 languages (English, German, French, Italian, Spanish, Chinese), software class A Runs with the following operating systems • Windows 10 Enterprise 2019 LTSC • Windows 10 Enterprise 2021 LTSC Floating license for 1 user, without SIMATIC PCS 7 Software Media Package	
• Goods delivery License key on USB flash drive, Certificate of License and TIA Engineering Toolset CD	**6ES7658-1CX78-2YE5**
• Online delivery License key download, online Certificate of License and TIA Engineering Toolset (software download) : Email address required!	**6ES7658-1CX78-2YK5**

More information

Upgrade

You can upgrade SIMATIC PCS 7 Engineering Systems with Engineering software V9.x to version 10.0 with SIMATIC PCS 7 Engineering Upgrade Packages AS/OS. The further developed SIMATIC Version Cross Manager V10.0 is available for use in SIMATIC PCS 7 V10.0. The upgrade to SIMATIC Version Cross Manager V10.0 is part of the Engineering Upgrade Package AS/OS V9.x to V10.0.

TIA applications

The Version Cross Manager is not only a software component of the SIMATIC PCS 7 Engineering System. As a separate product, it can also be used together with other SIMATIC products in the context of Totally Integrated Automation (TIA).

© Siemens AG 2024

Overview

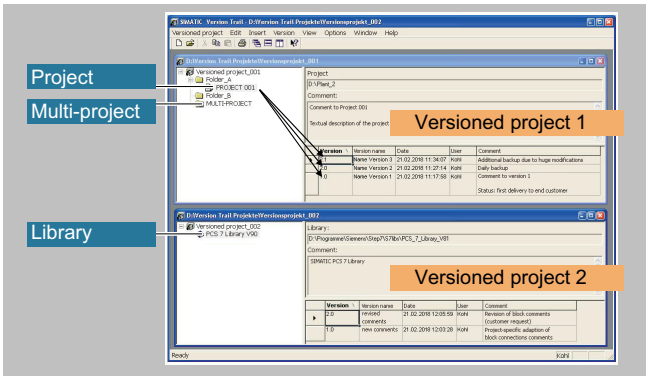

SIMATIC Version Trail is a software option for engineering which, together with the SIMATIC Logon central user administration, can assign a version history to libraries, projects and multiprojects.

Function

SIMATIC Version Trail tags the with a version ID when archiving, and enters the following information in the version history:

- Version
- Version name
- Date and time
- User
- Comment

Individual versions can be retrieved from the archive, and used further. SIMATIC Logon organizes the access protection.

Archiving and retrieval procedures can be automated on a time-driven basis. Retrieval of block parameters from the automation system can be coupled with the archiving procedure, but it can also be performed independently of this on a time-driven basis and with version assignment.

The version history managed by Version Trail can be displayed and printed. An already completed version cannot be modified at a later date. In conjunction with the Version Cross Manager, an archived version can be compared with an existing project or a second archived version.

Selection and ordering data

SIMATIC Version Trail V10.0 6 languages (English, German, French, Italian, Spanish, Chinese), software class A Runs with the following operating systems (see VT Readme in the Siemens Industry Online Support for the latest information) • Windows 10 Enterprise 2019 LTSC • Windows 10 Enterprise 2021 LTSC • Windows Server 2019 Standard Edition • Windows Server 2022 Standard Edition Floating license for 1 user, without SIMATIC PCS 7 Software Media Package	
• Goods delivery License key on USB flash drive, Certificate of License and TIA Engineering Toolset CD	**6ES7658-1FX78-2YA5**
• Online delivery License key download, online Certificate of License and TIA Engineering Toolset (software download) : Email address required!	**6ES7658-1FX78-2YH5**
Upgrade package (only for TIA applications)	
SIMATIC Version Trail Upgrade V9.0 to V10.0 6 languages (English, German, French, Italian, Spanish, Chinese), software class A, for operating systems see above Floating license for 1 user, without SIMATIC PCS 7 Software Media Package	
• Goods delivery License key on USB flash drive, Certificate of License	**6ES7658-1FX78-2YE5**
• Online delivery License key download, online Certificate of License and TIA Engineering Toolset (software download) : Email address required!	**6ES7658-1FX78-2YK5**

More information

Upgrade

You can upgrade SIMATIC PCS 7 Engineering Systems with Engineering software V9.x to version 10.0 with SIMATIC PCS 7 Engineering Upgrade Packages AS/OS. These upgrade packages include the upgrade for SIMATIC Version Trail from V9.x to V10.0.

TIA applications

SIMATIC Version Trail is not only a software component of the SIMATIC PCS 7 Engineering System. It is also a separate product which can be used in the context of Totally Integrated Automation (TIA) together with other SIMATIC products.

Note:

Note that Version Trail cannot be used as a stand-alone application; it only runs together with SIMATIC Logon (see "Industrial Security" section, "SIMATIC Logon" subsection).

© Siemens AG 2024

Overview

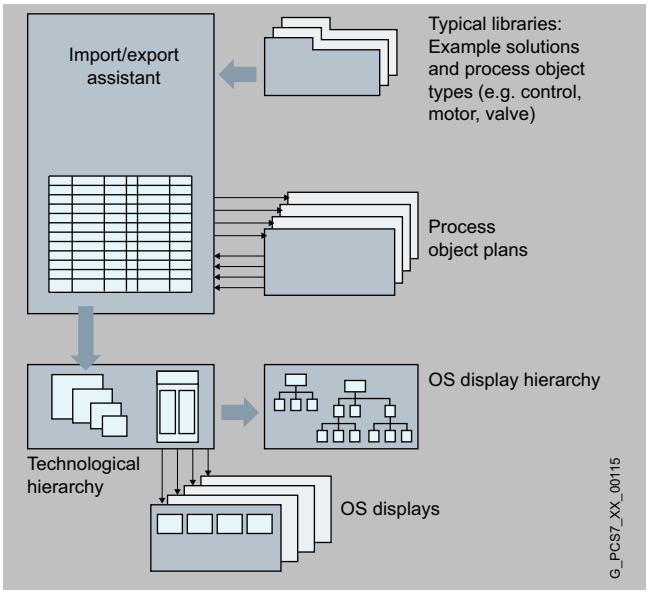

Efficient processing of mass data

The Import/Export Assistant (IEA) can be used for the rational engineering of mass data. The IEA is based on the principle of multiple application of process tag types and example solutions. It is particularly suitable for plants with numerous process tags of the same type or with multiple plant components of the same type.

Following exporting of the PCS 7 project, the data can be modified, duplicated, adapted and also reimported using the IEA editor or a spreadsheet program such as Microsoft Excel.

Comparison with the parameters optimized during commissioning is possible at a later point in time.

Function

- Generation/modification of CM and EM/EPH instances via Plant Generator
- Generation/modification of process tag types or example solutions
- Data import
- Data export
- Matching of process tags

Selection and ordering data

SIMATIC PCS 7 Import/Export Assistant V10.0 6 languages (English, German, French, Italian, Spanish, Chinese), software class A Runs with the following operating systems (see SIMATIC PCS 7 Readme for the latest information[1]): • Windows 10 Enterprise 2019 LTSC • Windows 10 Enterprise 2021 LTSC • Windows Server 2019 Standard Edition • Windows Server 2022 Standard Edition Floating license for 1 user, without SIMATIC PCS 7 Software Media Package	
• Goods delivery License key on USB flash drive, Certificate of License	**6ES7658-1DX78-2YB5**
• Online delivery License key download, online Certificate of License : Email address required!	**6ES7658-1DX78-2YH5**

[1] See "Software Media and Logistics" section, under "System documentation"

More information

Upgrade

You can upgrade SIMATIC PCS 7 Engineering Systems with Engineering software V9.x and V10.0 with SIMATIC PCS 7 Engineering Upgrade Packages AS/OS to version 10.0. These upgrade packages include the upgrade for SIMATIC PCS 7 Import/Export Assistant from V9.x to V10.0.

© Siemens AG 2024

Overview

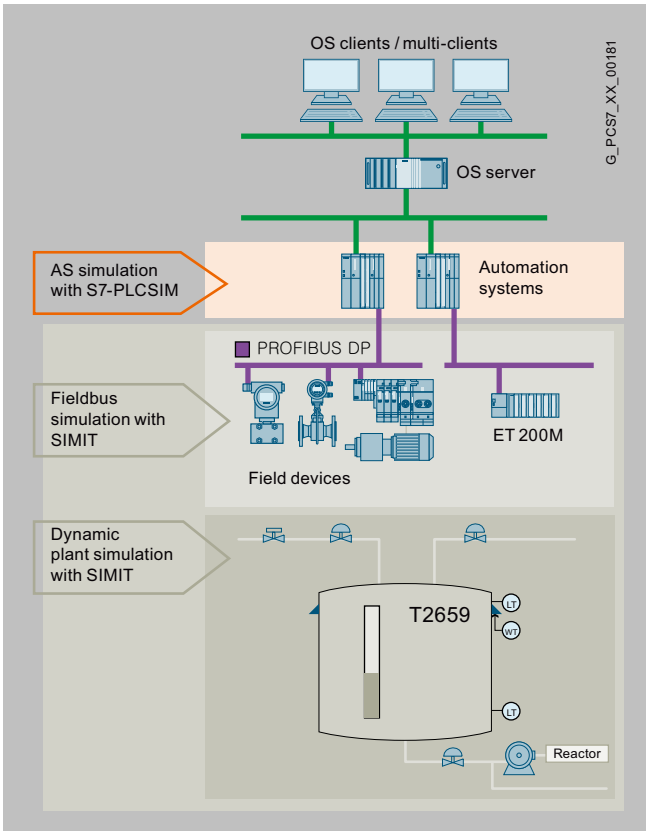

Overview of simulation software for SIMATIC PCS 7

The S7-PLCSIM simulation software supports functional testing of the user programs generated with CFC/SFC on a programming device/PC, irrespective of the availability of the target hardware. Detection and elimination of programming errors is thereby shifted to an earlier development phase. This enables faster commissioning, reduces the costs and increases the program quality.

Note:

S7-PLCSIM as of V5.4+SP8 is compatible with SIMATIC PCS 7 V10.0.

Function

S7-PLCSIM simulates a SIMATIC S7 CPU with the associated process images. The program to be tested is loaded into the simulated S7 CPU in a manner identical to the procedure with real hardware, and is executed there. S7-PLCSIM is completely integrated in STEP 7. Process data can be exchanged between S7-PLCSIM and other Windows applications via an interface.

Selection and ordering data

S7-PLCSIM V5.4 (including SP) Functional testing on PC/PG of programs created with CFC/SFC 5 languages (English, German, French, Italian, Spanish) Runs with the following operating systems: • Windows 7 Ultimate 64-bit • Windows 10 Enterprise 2015 LTSB 64-bit • Windows Server 2012 R2 Standard 64-bit Floating license for 1 user, without SIMATIC PCS 7 Software Media Package Goods delivery Software and electronic documentation on CD, license key on USB flash drive, Certificate of License	**6ES7841-0CC05-0YA5**

More information

Update/Upgrade

S7-PLCSIM Versions 3.x, 4.x, 5.0, 5.2 or 5.3 can be upgraded to Version 5.4. In addition, a Software Update Service in the form of a subscription is offered for S7-PLCSIM.

You can find more information in the section "Update/Upgrade Packages" under "Updates/Upgrades Asynchronous to the PCS 7 Version" - "Upgrades for S7-PLCSIM Simulation Software".

Further test and simulation programs

SIMIT Simulation Platform for testing and commissioning of project-specific user software on a partially virtual plant, see Catalog ST PCS 7 T "SIMATIC PCS 7 Process Control System – Technology components" subsection in "Simulations and training systems" section.

© Siemens AG 2024

Overview

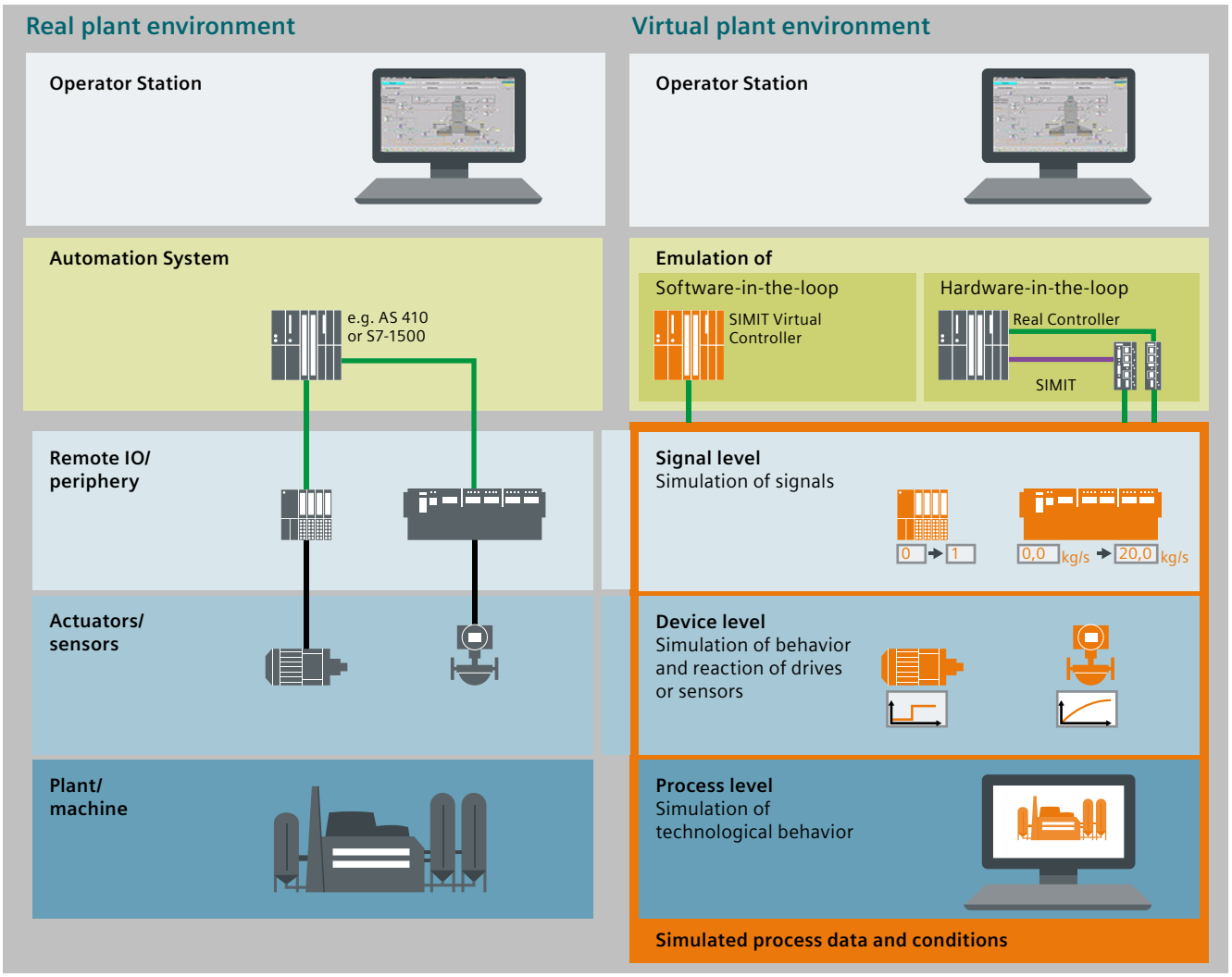

SIMIT Simulation

Bringing products to the market faster and with consistently high quality requires an optimized engineering workflow in the automation and the shortest possible assembly and commissioning times for new production lines. The SIMIT simulation software permits real-time simulation and emulation for comprehensive examination of automation solutions.

SIMIT simulates what SIMATIC automates

SIMIT is based on a uniform simulation platform that enables not only the virtual commissioning of the automation engineering of systems, machines and processes, but also realistic training environments for plant operators. This can be easily done directly at the workplace, even without requiring equipment or the need for in-depth knowledge of simulation. Either a real or virtual automation system is used for the control, for example, the SIMIT Virtual Controller.

SIMIT Virtual Controller instances can emulate the SIMATIC S7-300/S7-400 automation systems from the SIMATIC S7 and SIMATIC PCS 7 product range used in an automation project.

Many efficient tests for detection and elimination of potential faults can already be carried out before the real plant is even available, e.g.:

- Application of correct identifications
- Testing of interconnection or interlocking logic

In this manner it is possible to optimize the quality of the configuration process without a risk for the real plant.

Note:

SIMIT V11.2 can be used in combination with the following products:

- SIMATIC PCS 7
- SIMATIC PCS neo
- TIA Portal
- STEP 7

Notice: Please observe compatibility.

© Siemens AG 2024

Benefits

- Testing and training environments without real hardware
- Virtual controllers for emulation of automation systems
- Flexible simulation and emulation environment for projects of any size
- Synchronized simulation and emulation in real-time or virtual time
- Testing of original automation project
- Higher quality for automation engineering configuration
- Reduced commissioning time and risk due to pretesting
- No simulation configuration in the automation project

Design

SIMIT runs on the latest notebooks or desktop computers with the Microsoft Windows operating system as well as on virtual systems (VMware ESXi Server V7.0). Flexible application is possible and integration is possible via open interfaces into the factory automation with SIMATIC S7 and SIMATIC WinCC or into the process automation with SIMATIC PCS 7 or SIMATIC PCS neo.

Since the models can be calculated in real time, SIMIT can be linked to the actual automation engineering ("hardware-in-the-loop"), using the SIMIT unit for connection via the PROFINET or PROFIBUS interfaces. A "software-in-the-loop" test is also possible through virtualization of the automation system using the S7-PLCSIM or S7-PLCSIM Advanced emulation software, or the integrated SIMIT Virtual Controller.

Interfacing to the real automation system is usually made via PROFIBUS DP or PROFINET IO, With interface modules (SIMIT units) which simulate the devices on PROFIBUS DP/PROFINET IO.

Additional simulation models can be coupled to SIMIT:

- Data exchange via standardized interfaces such as OPC DA, OPC UA and shared memory
- Data exchange via one freely programmable external coupling (by the user)
- Synchronization via the remote control interface

In the case of coupling via the remote control interface, SIMIT can be either the master or client (slave) for other simulations. Using virtual time management, simulations can also be implemented faster or slower than in real-time.

SIMIT Simulation Platform

SIMIT can be perfectly adapted to individual requirements with four different software packages to suit the project size:

SIMIT Engineering S	4 000 simulation tags
SIMIT Engineering M	16 500 simulation tags
SIMIT Engineering L	200 000 simulation tags
SIMIT Engineering XL	1 000 000 simulation tags

SIMIT Engineering S - XL functional scope

- Portal view with workflow management for creation of simulation project
- Standard component library
- 3D viewer based on VRML (Virtual Reality Modeling Language)
- Interfaces for PROFIBUS DP, PROFINET IO and PRODAVE
- Interface for SIMIT Virtual Controller and OPC
- Trends and messages (TME)
- Scripting environment
- Editor for creating macro components (MCE)
- Editor for creating dynamic graphics and animations (DGE)
- Automatic Control Interface (ACI)
- Automatic generation of signal lists from SIMATIC Manager data
- Runtime for components developed with the Component Type Editor
- S7-PLCSIM, S7-PLCSIM Advanced, OPC and Remote Control interfaces
- Modification of simulation model during runtime
- Simulation in virtual time

© Siemens AG 2024

Design (continued)

- Engineering efficiency for SIMATIC PCS 7 (SMD)
- Automatic model generation based on templates
- Bulk engineering
- Shared memory interface for high-performance coupling
- XML interface for automatic generation of models and connections

SIMIT extension libraries

The following extension libraries make available specific technological components:

- SIMIT FLOWNET Library

  Library for simulation of flow networks with homogeneous media (water/gases) including pressures, temperatures and flow rates.
- SIMIT CONTEC Library

  Library for 2D simulation of material handling equipment.
- SIMIT CHEM BASIC Library

  For simplified creation of simulations in the chemical and pharmaceutical industries. By connecting components of these libraries, a SIMIT model of a pipeline network (so-called flow network) is created and can be used to simulate the thermodynamic processes in pipeline networks. The flow networks then connect components with storage characteristics, e.g. containers. The CHEM BASIC library enables use of a special solution method in SIMIT that calculates the flow rates, pressures and specific enthalpies during simulation of pipeline networks.

SIMIT Component Type Editor

For creating library components according to your own requirements and functional expectations.

© Siemens AG 2024

Function

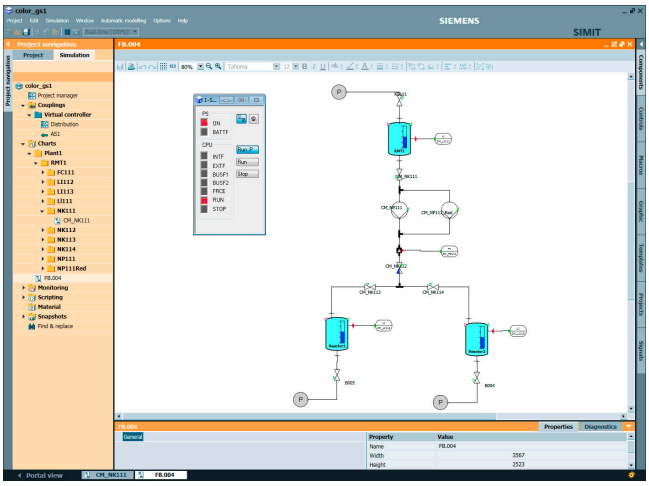

SIMIT, Graphical User Interface (GUI)

Component-based, signal flow oriented modeling of the plant is performed through the graphical user interface of SIMIT supported by expandable base libraries. For this, pre-defined components are selected from the library, placed on the graphic interface, connected with one another, and parameters are set. Beyond this, the simulation model can be generated with an export of the engineering data from COMOS. Special simulation skills are not required.

The efficient simulation is based on the abstraction at three different levels: Signals, devices (e.g. actuators and sensors) and technological response. Here, the technological response is represented mathematically and logically or by additive libraries.

Physical plant	Simulation with SIMIT	
Field equipment 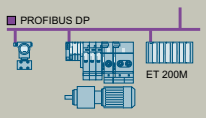	Signals Devices	Import (e.g. symbol table) Base library for • DRIVES • SENSORS
Technological plant/unit 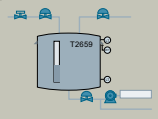	Technological response	Additive libraries • FLOWNET • CHEM BASIC
Production technology 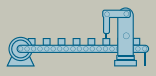		• CONTEC

Abstraction levels of the simulation

The signal couplings can be created easily by importing the symbol table or a list of signal names. Files of the Import/Export Assistant, Control Module (CM) files (SIMATIC PCS 7), or suitable Microsoft Excel files (SIMATIC S7) can be used together with simulation templates from the base library to simulate the devices.

Additive libraries support the simulation of the technological response and round off the SIMIT offer:

- FLOWNET can be used for rapid and simple simulation of the dynamic processes of pressures, flows and temperature distributions of water in pipeline networks.
- CONTEC can be used for simulation of material conveyor technology.
- With CHEM BASIC you can simulate models of pipeline networks in the chemical and pharmaceutical industries quickly and easily. Using CHEM BASIC, the models from COMOS P&ID can be automatically generated via the generic import.
- Device library for the creation of device simulation models (actuators and sensors) in SIMIT as a counterpart to the PCS 7 / PCS neo / APL / TIA Portal and other drivers. Can be used for DCS engineering, virtual commissioning or as the basis of an OTS simulation.

© Siemens AG 2024

Function (continued)

- SIMIT Water Library as an add-on for the creation of process simulation models for the water industry (fresh water extraction, water transport and reverse osmosis systems). Can be used for DCS engineering, virtual commissioning or as the basis of an OTS simulation. Requirement: SIMIT FLOWNET LIBRARY

The user can also create custom components and templates that enable effective customer-specific modeling.

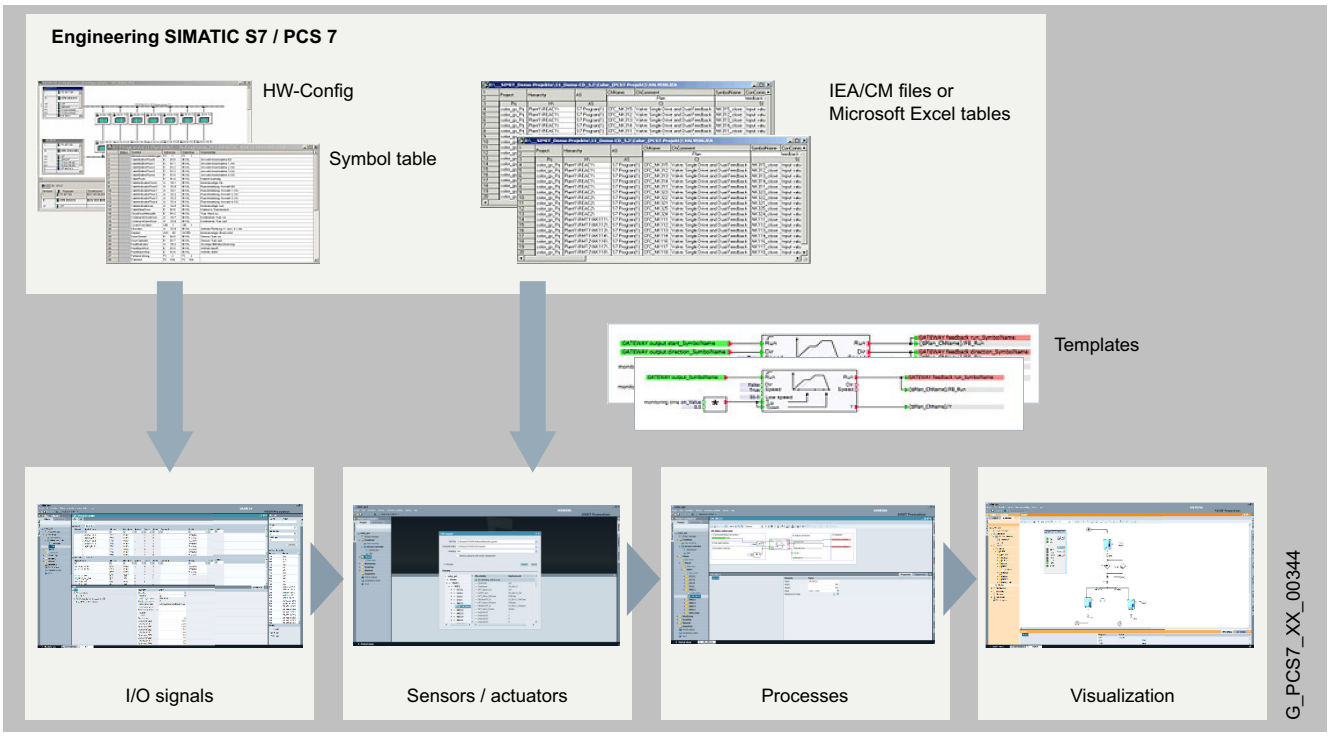

Workflow to create a simulation

SIMIT supports two types of virtual commissioning:

Software in the loop: Pretesting without a physical plant

When SIMIT is used in conjunction with the Virtual Controller or coupled to the S7-PLCSIM or S7-PLCSIM Advanced emulation software, the automation function can be tested in advance in the engineering office without the physical hardware – from the sensor through the automation system and back down to the actuator.

The user program is loaded in SIMATIC Manager into the automation system emulated by the SIMIT Virtual Controller, S7-PLCSIM or S7-PLCSIM Advanced without modifications and started. It obtains the simulated I/O signals via the coupling of the emulated automation system from SIMIT.

Hardware in the loop: Factory Acceptance Test (FAT)

The physical automation systems are loaded with the user program for the Factory Acceptance Test (FAT). SIMIT simulates the I/O signals, instrumentation and field devices. The simulation values are sent as message frames to the automation systems via the hardware interface modules (simulation unit). When SIMIT also simulates the technological response of the plant, the FAT becomes a plant test. Commissioning can be performed on the virtual process in an early phase of the project.

SIMIT Project Handling

You or your customers require a simulation solution based on SIMIT and the automation (SIMATIC S7, SIMATIC PCS 7 and SPPA-T3000) with specific properties for Hardware-in-the-Loop or Software-in-the-Loop. We execute the projects for you and achieve the best results possible based on our decades of experience with simulation projects. We offer:

- Complete simulators and process models for virtual commissioning and training simulators
- High-precision process simulators for various industries
- Customer-specific simulation libraries (e.g. pharmaceuticals, power generation and distribution, hydrogen, etc.)

SIMIT Consulting and Training Courses

You or your customers require support or training for a simulation project based on SIMIT and the automation (SIMATIC S7/PCS 7) with specific properties for Hardware-in-the-Loop or Software-in-the-Loop. To help you complete your task optimally, we can support and advise you during the corresponding phases of the automation project using our decades of experience in simulation projects. You can also have our experts support you with your simulation from the planning phase to project setup right up to automation testing. We offer:

- Pre-defined consulting packages
- Specific packages, depending on customer requirements
- Customer-specific trainings

SIMIT Rental Components

The option of renting portfolio elements from the range of SIMIT products reduces the costs for a simulation environment. If these

© Siemens AG 2024

Function (continued)

components are required for validation or testing of the automation for only a limited time, it is often more economical to rent them. The rental components are always supplied with the latest hardware and software versions. We offer:

- Rental licenses for SIMIT and SIMIT Virtual Controller
- Rental of SIMIT UNIT

If you are interested in this offer and would like to receive more information, please contact:

Siemens AG
Digital Industries
Process Automation
DI PA SW ID MBS TS
Gerrit Wolf
Siemenspromenade 3
91058 Erlangen
Germany
Email: gerrit.wolf@siemens.com

Selection and ordering data

SIMIT software packages Note: Can only be used in connection with a valid license/dongle V11.2	
SIMATIC License Carrier USB Stick	6DL8900-7XX00-0XB8-ZY01Y02
SIMATIC License Carrier DL	6DL8900-7XX00-0XH8-ZY01Y02
SIMATIC License USB Dongle	6DL8900-8XX00-0XB8-ZY01
SIMATIC License USB Dongle (spare part)	6DL8900-8XX01-0XB8-ZY01
SIMIT Simulation Platform Software Engineering S V11.2	6DL8913-0AL20-0AB5
SIMIT Simulation Platform Software Engineering M V11.2	6DL8913-0BL20-0AB5
SIMIT Simulation Platform Software Engineering L V11.2	6DL8913-0CL20-0AB5
SIMIT Simulation Platform Software Engineering XL V11.2	6DL8913-0DL20-0AB5
SIMIT Simulation Platform Software Player S V11.2	6DL8913-0TL20-0AB5
SIMIT Simulation Platform Software Player M V11.2	6DL8913-0UL20-0AB5
SIMIT Simulation Platform Software Player L V11.2	6DL8913-0VL20-0AB5
SIMIT Simulation Platform Software Player XL V11.2	6DL8913-0WL20-0AB5
SIMIT Simulation Platform Software Engineering S DL V11.2	6DL8913-0AL20-0AH5
SIMIT Simulation Platform Software Engineering M DL V11.2	6DL8913-0BL20-0AH5
SIMIT Simulation Platform Software Engineering L DL V11.2	6DL8913-0CL20-0AH5
SIMIT Simulation Platform Software Engineering XL DL V11.2	6DL8913-0DL20-0AH5
SIMIT Simulation Platform Software Player S DL V11.2	6DL8913-0TL20-0AH5
SIMIT Simulation Platform Software Player M DL V11.2	6DL8913-0UL20-0AH5
SIMIT Simulation Platform Software Player L DL V11.2	6DL8913-0VL20-0AH5
SIMIT Simulation Platform Software Player XL DL V11.2	6DL8913-0WL20-0AH5
Upgrades	
SIMIT Simulation Platform Software Engineering S Upgrade V11.1 -> V11.2	6DL8913-0AL20-0AE5
SIMIT Simulation Platform Software Engineering M Upgrade V11.1 -> V11.2	6DL8913-0BL20-0AE5
SIMIT Simulation Platform Software Engineering L Upgrade V11.1 -> V11.2	6DL8913-0CL20-0AE5

Selection and ordering data (continued)

SIMIT Simulation Platform Software Engineering XL Upgrade V11.1 -> V11.2	6DL8913-0DL20-0AE5
SIMIT Simulation Platform Software Engineering Conversion Pack S -> M V11.2	6DL8913-0BL20-0AD5
SIMIT Simulation Platform Software Engineering Conversion Pack M -> L V11.2	6DL8913-0CL20-0AD5
SIMIT Simulation Platform Software Engineering Conversion Pack L -> XL V11.2	6DL8913-0DL20-0AD5
SIMIT Simulation Platform Software Engineering S Upgrade V11.1 -> V11.2 DL	6DL8913-0AL20-0AK5
SIMIT Simulation Platform Software Engineering M Upgrade V11.1 -> V11.2 DL	6DL8913-0BL20-0AK5
SIMIT Simulation Platform Software Engineering L Upgrade V11.1 -> V11.2 DL	6DL8913-0CL20-0AK5
SIMIT Simulation Platform Software Engineering XL Upgrade V11.1 -> V11.2 DL	6DL8913-0DL20-0AK5
SIMIT Simulation Platform Software Engineering Conversion Pack S -> M DL V11.2	6DL8913-0BL20-0AJ5
SIMIT Simulation Platform Software Engineering Conversion Pack M -> L DL V11.2	6DL8913-0CL20-0AJ5
SIMIT Simulation Platform Software Engineering Conversion Pack L -> XL DL V11.2	6DL8913-0DL20-0AJ5
Extension libraries	
SIMIT Simulation Platform Software Component Type Editor	6DL8913-0EK20-0AB5
SIMIT Simulation Platform Software FLOWNET Library	6DL8913-0FK20-0AB5
SIMIT Simulation Platform Software CONTEC Library	6DL8913-0GK20-0AB5
SIMIT Simulation Platform Software CHEM BASE Library	6DL8913-0HK20-0AB5
SIMIT Simulation Platform Software Component Type Editor DL	6DL8913-0EK20-0AH5
SIMIT Simulation Platform Software FLOWNET Library DL	6DL8913-0FK20-0AH5
SIMIT Simulation Platform Software CONTEC Library DL	6DL8913-0GK20-0AH5
SIMIT Simulation Platform Software CHEM BASE Library DL	6DL8913-0HK20-0AH5

© Siemens AG 2024

Selection and ordering data (continued)

Software Update Service (SUS) Note: Under this contract, you receive all current software versions for a period of 1 year. The contract is automatically extended by a further year unless canceled three months prior to expiration. Period of delivery and service: 1 year from date of invoice	
SIMIT Simulation Software Engineering S Software Update Service for Simulation Software Engineering S; subscription contract for 1 year with automatic renewal; requirement: current software version	6DL8913-0AX00-0AL8
SIMIT Simulation Software Engineering M Software Update Service for Simulation Software Engineering M; subscription contract for 1 year with automatic renewal; requirement: current software version	6DL8913-0BX00-0AL8
SIMIT Simulation Software Engineering L Software Update Service for Simulation Software Engineering L; subscription contract for 1 year with automatic renewal; requirement: current software version	6DL8913-0CX00-0AL8
SIMIT Simulation Software Engineering XL Software Update Service for Simulation Software Engineering XL; subscription contract for 1 year with automatic renewal; requirement: current software version	6DL8913-0DX00-0AL8
SIMIT Simulation Software Player S Software Update Service for Simulation Software Player S; subscription contract for 1 year with automatic renewal; requirement: current software version	6DL8913-0TX00-0AL8
SIMIT Simulation Software Player M Software Update Service for Simulation Software Player M; subscription contract for 1 year with automatic renewal; requirement: current software version	6DL8913-0UX00-0AL8
SIMIT Simulation Software Player L Software Update Service for Simulation Software Player L; subscription contract for 1 year with automatic renewal; requirement: current software version	6DL8913-0VX00-0AL8
SIMIT Simulation Software Player XL Software Update Service for Simulation Software Player XL; subscription contract for 1 year with automatic renewal; requirement: current software version	6DL8913-0WX00-0AL8
SIMIT Simulation Software Engineering S DL Software Update Service for Simulation Software Engineering S; subscription contract for 1 year with automatic renewal; requirement: current software version	6DL8913-0AX00-0AV8

Selection and ordering data (continued)

SIMIT Simulation Software Engineering M DL Software Update Service for Simulation Software Engineering M; subscription contract for 1 year with automatic renewal; requirement: current software version	6DL8913-0BX00-0AV8
SIMIT Simulation Software Engineering L DL Software Update Service for Simulation Software Engineering L; subscription contract for 1 year with automatic renewal; requirement: current software version	6DL8913-0CX00-0AV8
SIMIT Simulation Software Engineering XL DL Software Update Service for Simulation Software Engineering XL; subscription contract for 1 year with automatic renewal; requirement: current software version	6DL8913-0DX00-0AV8
SIMIT Simulation Software Player S DL Software Update Service for Simulation Software Player S; subscription contract for 1 year with automatic renewal; requirement: current software version	6DL8913-0TX00-0AV8
SIMIT Simulation Software Player M DL Software Update Service for Simulation Software Player M; subscription contract for 1 year with automatic renewal; requirement: current software version	6DL8913-0UX00-0AV8
SIMIT Simulation Software Player L DL Software Update Service for Simulation Software Player L; subscription contract for 1 year with automatic renewal; requirement: current software version	6DL8913-0VX00-0AV8
SIMIT Simulation Software Player XL DL Software Update Service for Simulation Software Player XL; subscription contract for 1 year with automatic renewal; requirement: current software version	6DL8913-0WX00-0AV8
Demonstration software Note: Limited functionality (see product information); no liability or warranty	
SIMIT demo version V11.2	Download in the Siemens Industry Online Support Portal
Consulting and training offers	
SIMIT Consulting Consultation on analysis, design, project setup and test operation on a daily basis Customer-specific training: Software-in-the-loop simulation platform, hardware-in-the-loop simulation platform and SIMIT VC interfaces Type of delivery: Written contract	9AP1471-2AD00

More information

More information is available on the internet at:
http://www.siemens.com/simit

© Siemens AG 2024

Overview

Bringing products to the market faster and with consistently high quality requires an optimized engineering workflow in the automation and the shortest possible assembly and commissioning times for new production lines. The SIMIT simulation software permits real-time simulation and emulation for comprehensive examination of automation solutions.

SIMIT simulates what SIMATIC automates

SIMIT is based on a uniform simulation platform that enables not only the virtual commissioning of the automation engineering of systems, machines and processes, but also realistic training environments for plant operators. This can be easily done directly at the workplace, even without requiring equipment or the need for in-depth knowledge of simulation. Either a real or virtual automation system can be used for the control.

Many efficient tests for detection and elimination of potential faults can already be carried out before the real plant is even available, e.g.:

- Application of correct identifications
- Testing of interconnection or interlocking logic

In this manner it is possible to optimize the quality of the configuration process without a risk for the real plant.

Benefits

- Testing and training environments with real hardware (CPU)
- Flexible simulation and emulation environment for projects of any size
- Synchronized simulation and emulation in real-time or virtual time
- Testing of original automation project
- Higher quality for automation engineering configuration
- Reduced commissioning time and risk due to pretesting
- No simulation configuration in the automation project

© Siemens AG 2024

Design

Since the models can be calculated in real time, SIMIT can be linked to the actual automation engineering ("hardware-in-the-loop"), using the SIMIT unit for connection via the PROFINET or PROFIBUS interfaces. The SIMIT units simulate the devices on PROFIBUS DP/PROFINET IO while the simulation values, influenced by SIMIT, are sent as message frames to the automation systems via the hardware interfaces (simulation unit). When SIMIT also simulates the technological response of the system it becomes possible to carry out a full system test, making it possible to perform commissioning on the virtual model in an early phase of the project.

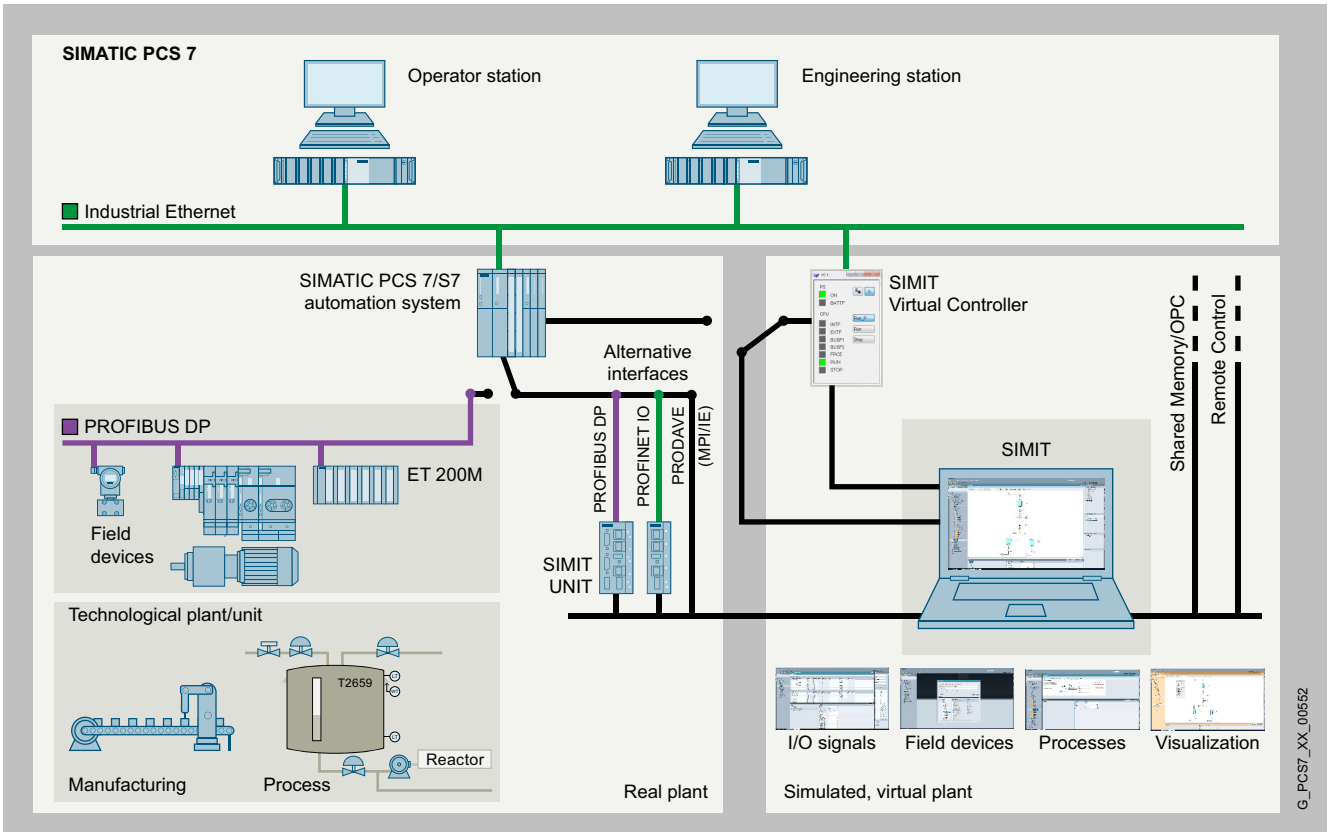

SIMIT Simulation Platform for PCS 7

Function

Coupling with SIMIT allows an efficient engineering workflow for hardware-in-the-loop simulation. The execution of load and safety tests prior to actual commissioning adds greater protection for personnel and machines/plants and a time/cost reduction through early error detection.

The following products are offered for simulating PROFINET and PROFIBUS:

- SIMIT UNIT PB 2
- SIMIT UNIT PN 128
- SIMIT UNIT PN 256

PROFIBUS simulation

Using the SIMIT UNIT PB hardware interface, you can simulate the complete behavior of up to 125 PROFIBUS slaves on the field bus, reaction-free and in real time.

PROFINET simulation

Using the SIMIT UNIT PN hardware interface, you can simulate the complete behavior of up to 256 PROFINET I/O devices on the field bus, reaction-free and in real time.

© Siemens AG 2024

Selection and ordering data

SIMIT software packages Note: Can only be used in connection with a valid license/dongle V11.2	
SIMIT UNIT PB 2 2-channel interface module for SIMIT for simulation of PROFIBUS DP slaves in a DP master system; maximum of 125 DP slaves per channel	**9AE4122-2AA00**
SIMIT UNIT PN 128 Single channel interface module for SIMIT for simulation of 128 PROFINET I/O devices	**9AE4120-2AA00**
SIMIT UNIT PN 256 Single channel interface module for SIMIT for simulation of 256 PROFINET I/O devices	**9AE4120-2AB00**
Demonstration software Note: Limited functionality (see product information); no liability or warranty	
SIMIT demo version V11.0	Download in the Siemens Industry Online Support Portal

More information

More information is available on the internet at:
http://www.siemens.com/simit

© Siemens AG 2024

Overview

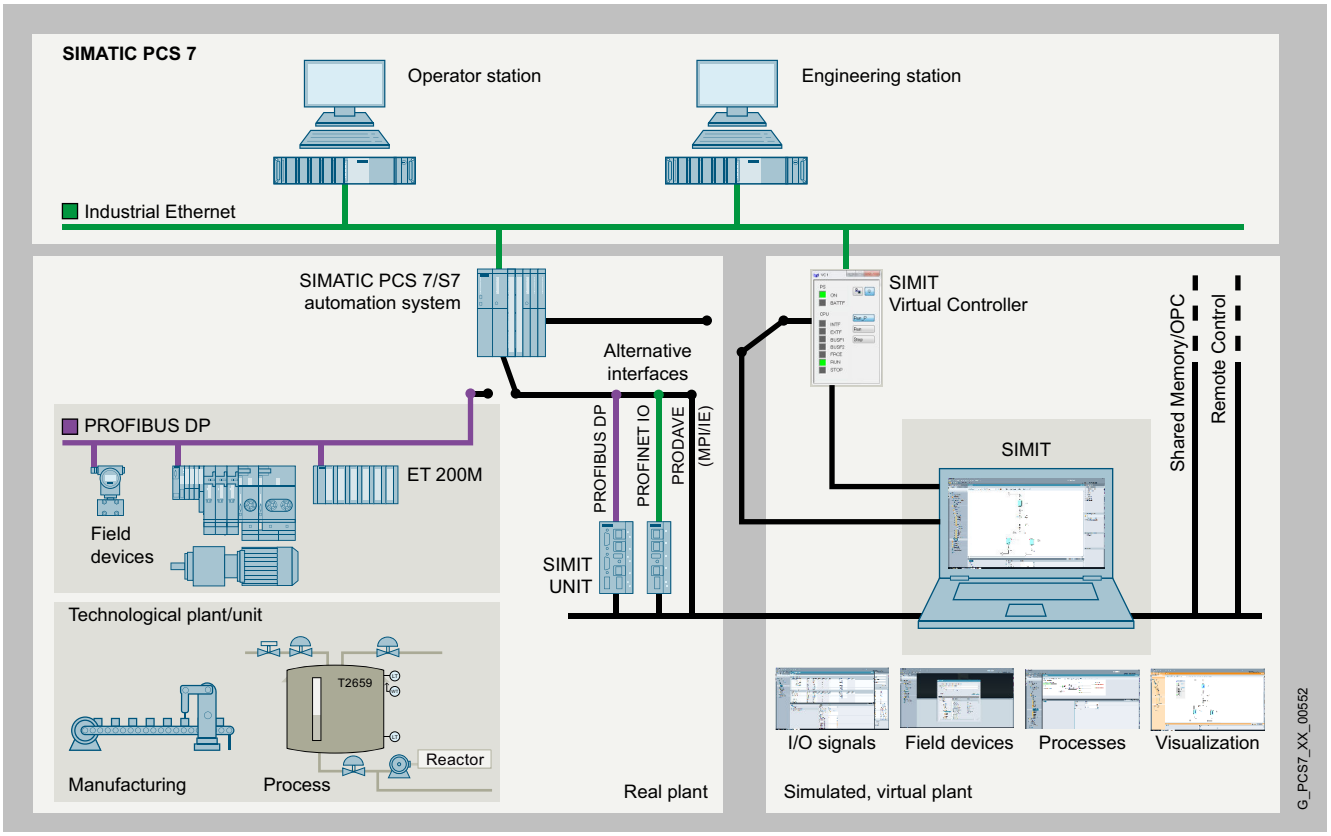

Application area and integration options of SIMIT

Bringing products to the market faster and with consistently high quality requires an optimized engineering workflow in the automation and the shortest possible assembly and commissioning times for new production lines. The SIMIT simulation software permits real-time simulation and emulation for comprehensive examination of automation solutions.

SIMIT simulates what SIMATIC automates

SIMIT is based on a uniform simulation platform that enables not only the virtual commissioning of the automation engineering of systems, machines and processes, but also realistic training environments for plant operators. This can be easily done directly at the workplace, even without requiring equipment or the need for in-depth knowledge of simulation. Either a real or virtual automation system is used for the control, for example, the SIMIT Virtual Controller.

SIMIT Virtual Controller instances can emulate the SIMATIC S7-300/S7-400 automation systems from the SIMATIC S7 and SIMATIC PCS 7 product range used in an automation project.

Many efficient tests for detection and elimination of potential faults can already be carried out before the real plant is even available, e.g.:

- Application of correct identifications
- Testing of interconnection or interlocking logic

In this manner it is possible to optimize the quality of the configuration process without a risk for the real plant.

© Siemens AG 2024

Benefits

- Testing and training environments without real hardware
- Virtual controllers for emulation of automation systems
- Flexible simulation and emulation environment for projects of any size
- Synchronized simulation and emulation in real-time or virtual time
- Testing of original automation project
- Higher quality for automation engineering configuration
- Reduced commissioning time and risk due to pretesting
- No simulation configuration in the automation project

Design

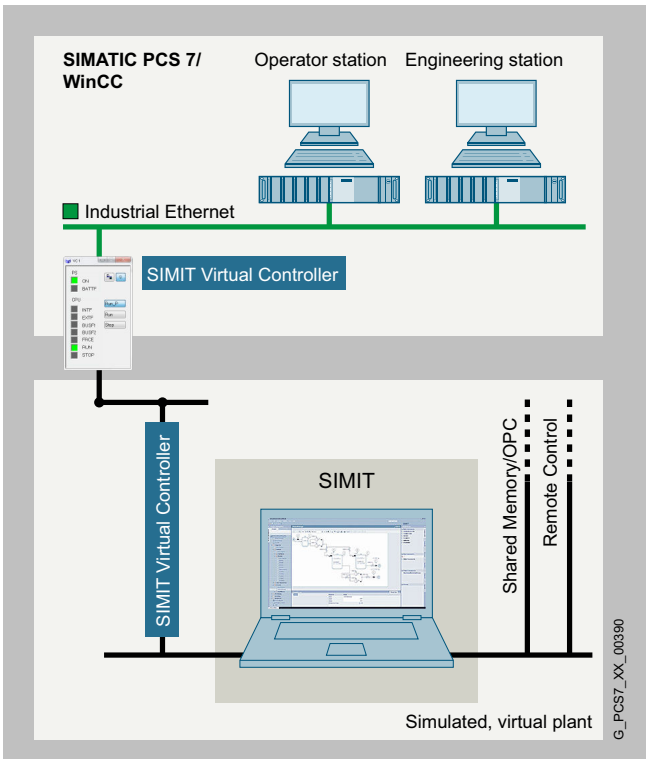

SIMIT Virtual Controller

You can use SIMIT Virtual Controllers to implement testing and training systems of any size without physical hardware. This means you can test the original automation programs completely before commissioning and train operators in the practical work with the configured automation functions.

To do so, the SIMIT Engineering S–XL software package are extended with cumulative SIMIT Virtual Controller instances. SIMIT Virtual Controller instances emulate the SIMATIC S7-300, S7-400 and S7-410 automation systems used in a SIMATIC S7 or SIMATIC PCS 7 automation project on the latest notebooks or desktop computers with the Microsoft Windows operating system, or in a virtual environment (ESXi Server V7.0).

The following products are offered for emulation:

- SIMIT Virtual Controller software for 1 controller
- SIMIT Virtual Controller software for 5 controllers

Specification/Configuration

- Almost unlimited number of SIMIT Virtual Controllers, distributed over multiple computers (max. 32 virtual controllers per SIMIT Engineering)
- One SIMIT Engineering S–XL is required for each simulation system (not included in the SIMIT Virtual Controller scope of supply)

© Siemens AG 2024

Function

When SIMIT is used in connection with the Virtual Controller, the automation function can be tested in advance in the engineering office without the physical hardware – from the sensor through the automation system and back down to the actuator.

The user program is loaded in SIMATIC Manager into the automation system emulated by the SIMIT Virtual Controller without modifications and started. It obtains the simulated I/O signals via the coupling of the emulated automation system from SIMIT.

SIMIT Virtual Controller

SIMIT Virtual Controllers are high-performance emulation systems for the SIMATIC S7-300, S7-400 and S7-410 automation systems which are integrated in SIMIT.

Special features

- High degree of reusability of the information from the engineering system
- SIMIT Virtual Controller are synchronized with each other
- The automation system is loaded by means of the engineering system as in the actual automation system
- Runtime is independent of the engineering system
- Automation programs can run in virtual time (faster or slower than in real-time)
- Current states of the SIMIT Virtual Controller and the SIMIT simulation model can be saved in the shared snapshot

System and communication functions

For detailed information on supported SIMATIC S7/SIMATIC PCS 7 system and communication functions, as well as communication services, see the SIMIT V11.2 manual:
(manual not yet available)

Note:

The SIMIT Virtual Controller does not support, among others:

- BRAUMAT Classic
- Data record communication
- Named Connections via RFC1006
- Communication blocks TSEND, TRECV

Selection and ordering data

SIMIT software packages Note: Can only be used in connection with a valid license/dongle V11.2	
SIMATIC License Carrier USB Stick	**6DL8900-7XX00-0XB8-ZY01Y02**
SIMATIC License Carrier DL	**6DL8900-7XX00-0XH8-ZY01Y02**
SIMATIC License USB Dongle	**6DL8900-8XX00-0XB8-ZY01**
SIMATIC License USB Dongle (spare part)	**6DL8900-8XX01-0XB8-ZY01**
SIMIT Virtual Controller Software Full V11.2 (1 controller)	**6DL8913-0JL20-0AB5**
SIMIT Virtual Controller Software Full V11.2 (1 controllers) DL	**6DL8913-0JL20-0AH5**
SIMIT Virtual Controller Software Full V11.2 (5 controllers)	**6DL8913-0KL20-0AB5**
SIMIT Virtual Controller Software Full V11.2 (5 controllers) DL	**6DL8913-0KL20-0AH5**
SIMIT Virtual Controller Software 300 V11.2 (1 controller)	**6DL8913-0NL20-0AB5**
SIMIT Virtual Controller Software 300 V11.2 (1 controller) DL	**6DL8913-0NL20-0AH5**
SIMIT Virtual Controller Software 300 V11.2 (5 controllers)	**6DL8913-0PL20-0AB5**
SIMIT Virtual Controller Software 300 V11.2 (5 controllers) DL	**6DL8913-0PL20-0AH5**
SIMIT Virtual Controller Software Entry / SIS V11.2 (1 controller)	**6DL8913-0QL20-0AB5**
SIMIT Virtual Controller Software Entry / SIS V11.2 (1 controller) DL	**6DL8913-0QL20-0AH5**
SIMIT Virtual Controller Software Entry / SIS V11.2 (5 controllers)	**6DL8913-0RL20-0AB5**
SIMIT Virtual Controller Software Entry / SIS V11.2 (5 controllers) DL	**6DL8913-0RL20-0AH5**
Upgrades	
SIMIT Virtual Controller Software Full (1 controller) Upgrade V11.1 > V11.2	**6DL8913-0JL20-0AE5**
SIMIT Virtual Controller Software Full (1 controller) Upgrade V11.1 > V11.2 DL	**6DL8913-0JL20-0AK5**
SIMIT Virtual Controller Software Full (5 controllers) Upgrade V11.1 > V11.2	**6DL8913-0KL20-0AE5**
SIMIT Virtual Controller Software Full (5 controllers) Upgrade V11.1 > V11.2 DL	**6DL8913-0KL20-0AK5**
SIMIT Virtual Controller Software 300 (1 controller) Upgrade V11.1 > V11.2	**6DL8913-0NL20-0AE5**
SIMIT Virtual Controller Software 300 (1 controller) Upgrade V11.1 > V11.2 DL	**6DL8913-0NL20-0AK5**
SIMIT Virtual Controller Software 300 (5 controllers) Upgrade V11.1 > V11.2	**6DL8913-0PL20-0AE5**
SIMIT Virtual Controller Software 300 (5 controllers) Upgrade V11.1 > V11.2 DL	**6DL8913-0PL20-0AK5**
SIMIT Virtual Controller Software Entry / SIS (1 controller) Upgrade V11.1 > V11.2	**6DL8913-0QL20-0AE5**
SIMIT Virtual Controller Software Entry / SIS (1 controller) Upgrade V11.1 > V11.2 DL	**6DL8913-0QL20-0AK5**

© Siemens AG 2024

Selection and ordering data (continued)

SIMIT Virtual Controller Software Entry / SIS (1 controller) Upgrade V11.1 > V11.2	**6DL8913-0RL20-0AE5**
SIMIT Virtual Controller Software Entry / SIS (1 controller) Upgrade V11.1 > V11.2 DL	**6DL8913-0RL20-0AK5**
Software Update Service (SUS) Note: Under this contract, you receive all current software versions for a period of 1 year. The contract is automatically extended by a further year unless canceled three months prior to expiration. Period of delivery and service: 1 year from date of invoice	
SIMIT Virtual Controller Software (1 controller) Software Update Service for Virtual Controller Software Full 1VC; subscription contract for 1 year, with automatic renewal; requirement: current software version	**6DL5260-0DA00-2YL8**
SIMIT Virtual Controller Software Full (1 controller) DL Software Update Service for Virtual Controller Software Full 1VC; subscription contract for 1 year, with automatic renewal; requirement: current software version	**6DL5260-0DA00-2YV8**
SIMIT Virtual Controller Software (5 controllers) Software Update Service for Virtual Controller Software Full 5VC; subscription contract for 1 year, with automatic renewal; requirement: current software version	**6DL5260-0DB00-2YL8**
SIMIT Virtual Controller Software Full (5 controllers) DL Software Update Service for Virtual Controller Software Full 5VC; subscription contract for 1 year, with automatic renewal; requirement: current software version	**6DL5260-0DB00-2YV8**
SIMIT Virtual Controller Software 300 (1 controller) Software Update Service for Virtual Controller Software 300 1VC; subscription contract for 1 year, with automatic renewal; requirement: current software version	**6DL8913-0NX00-0AL8**
SIMIT Virtual Controller Software 300 (1 controller) DL Software Update Service for Virtual Controller Software 300 1VC; subscription contract for 1 year, with automatic renewal; requirement: current software version	**6DL8913-0NX00-0AV8**
SIMIT Virtual Controller Software 300 (5 controllers) Software Update Service for Virtual Controller Software 300 5VC; subscription contract for 1 year, with automatic renewal; requirement: current software version	**6DL8913-0PX00-0AL8**
SIMIT Virtual Controller Software 300 (5 controllers) DL Software Update Service for Virtual Controller Software 300 5VC; subscription contract for 1 year, with automatic renewal; requirement: current software version	**6DL8913-0PX00-0AV8**

Selection and ordering data (continued)

SIMIT Virtual Controller Software Entry / SIS (1 controller) Software Update Service for Virtual Controller Software Entry / SIS 1VC; subscription contract for 1 year, with automatic renewal; requirement: current software version	**6DL8913-0QX00-0AL8**
SIMIT Virtual Controller Software Entry / SIS (1 controller) DL Software Update Service for Virtual Controller Software Entry / SIS 1VC; subscription contract for 1 year, with automatic renewal; requirement: current software version	**6DL8913-0QX00-0AV8**
SIMIT Virtual Controller Software Entry / SIS (5 controllers) Software Update Service for Virtual Controller Software Entry / SIS 5VC; subscription contract for 1 year, with automatic renewal; requirement: current software version	**6DL8913-0RX00-0AL8**
SIMIT Virtual Controller Software Entry / SIS (5 controllers) DL Software Update Service for Virtual Controller Software Entry / SIS 5VC; subscription contract for 1 year, with automatic renewal; requirement: current software version	**6DL8913-0RX00-0AV8**
Demonstration software Note: Limited functionality (see product information); no liability or warranty	
SIMIT demo version V11.2	Download in the Siemens Industry Online Support Portal

More information

More information is available on the internet at:
http://www.siemens.com/simit

© Siemens AG 2024

4/2 SIMATIC PCS 7 Plant Automation Accelerator

© Siemens AG 2024

Overview

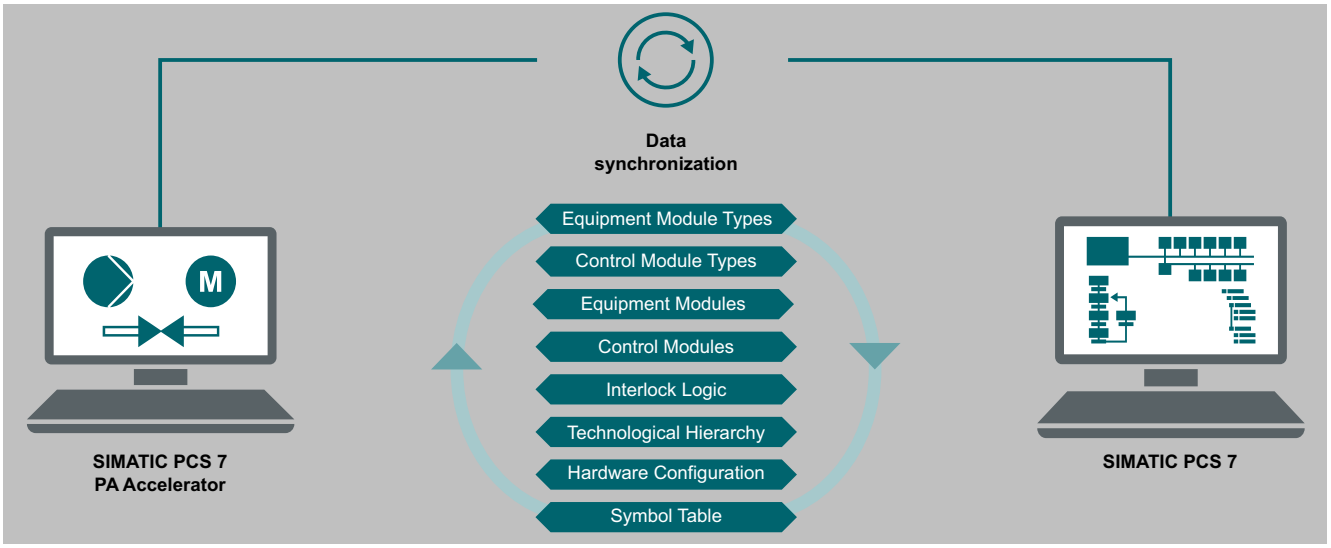

Data exchange between SIMATIC PCS 7 Plant Automation Accelerator and SIMATIC PCS 7

Performance in engineering

With regard to planning and engineering, performance can be equated with minimizing time and costs. "Integrated Engineering" offers a unique approach here: an integrated planning workflow from the description of the process to the automation program.

Using the SIMATIC PCS 7 Plant Automation Accelerator (PAA), both engineers and planning offices and end users can significantly reduce their configuration and commissioning costs while simultaneously improving the quality of engineering.

PAA expands the functionality for plant configuration and documentation. To improve efficiency in plant engineering, the PAA provides support generating offers with a plant topology plan and the bills of materials to the automatic generation of SIMATIC PCS 7 data from electrical and function diagrams.

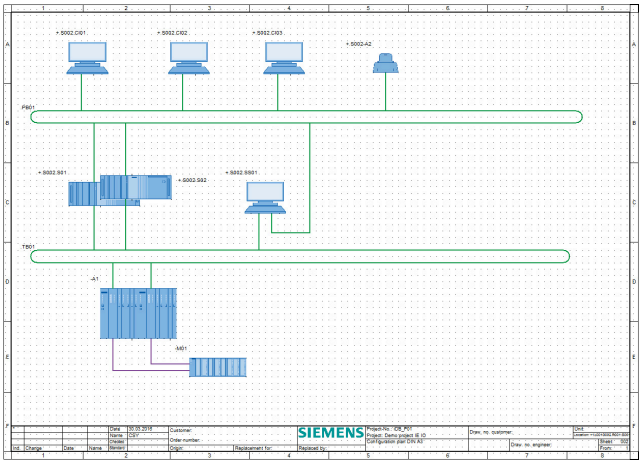

Plant topology plan

© Siemens AG 2024

Overview (continued)

SIEMENS

Bill of material - without bundles	Project	Demo project IE IO
Cabinet	Project-No.	iDB_P01
	Building	+0L001
TAG-No.	P&ID no.	
Location +0L001G001.R001.S001	Unit	

1	Name	Article description	MLFB
2	0	Rack, UR2	6ES7 400-1JA01-0AA0
3	1	Rack, UR2	6ES7 400-1JA01-0AA0
4	0	Profile rail, 483mm	6ES7 195-1GA00-0XA0
5	0	Profile rail, 483mm	6ES7 195-1GA00-0XA0
6	0	Profile rail, 483mm	6ES7 195-1GA00-0XA0
7	0	Profile rail, 483mm	6ES7 195-1GA00-0XA0
8	0	Profile rail, 483mm	6ES7 195-1GA00-0XA0
9	1	PS 405, 10A, DC 24/48/60V, DC 5V/10A	6ES7 405-0KA02-0AA0
10	3	CPU 410-5H	6ES7 410-5HX08-0AB0
11	5	CP 443-5 Ext	6GK7 443-5DX05-0XE0
12	1	PS 405, 10A, DC 24/48/60V, DC 5V/10A	6ES7 405-0KA02-0AA0
13	3	CPU 410-5H	6ES7 410-5HX08-0AB0
14	5	CP 443-5 Ext	6GK7 443-5DX05-0XE0
15	0	PS 307 AC 120/230V, DC 24V/2A	6ES7 307-1BA01-0AA0
16	2	IM 153-2 HF	6ES7 153-2BA02-0XB0
17	01	Bus unit, 2x40mm	6ES7 195-7HB00-0XA0
18	02	Bus unit, 2x40mm	6ES7 195-7HB00-0XA0
19	03	Bus unit, 2x40mm	6ES7 195-7HB00-0XA0
20	04	Bus unit, 2x40mm	6ES7 195-7HB00-0XA0
21	0	PS 307 AC 120/230V, DC 24V/2A	6ES7 307-1BA01-0AA0
22	2	IM 153-2 HF	6ES7 153-2BA02-0XB0
23	01	Bus unit, 2x40mm	6ES7 195-7HB00-0XA0
24	02	Bus unit, 2x40mm	6ES7 195-7HB00-0XA0
25	03	Bus unit, 2x40mm	6ES7 195-7HB00-0XA0
26	04	Bus unit, 2x40mm	6ES7 195-7HB00-0XA0
27	0	PS 307 AC 120/230V, DC 24V/2A	6ES7 307-1BA01-0AA0
28	2	IM 153-2 HF	6ES7 153-2BA02-0XB0
29	01	Bus unit, 2x40mm	6ES7 195-7HB00-0XA0
30	02	Bus unit, 2x40mm	6ES7 195-7HB00-0XA0
31	03	Bus unit, 2x40mm	6ES7 195-7HB00-0XA0
32	04	Bus unit, 2x40mm	6ES7 195-7HB00-0XA0
33	0	PS 307 AC 120/230V, DC 24V/2A	6ES7 307-1BA01-0AA0
34	2	IM 153-2 HF	6ES7 153-2BA02-0XB0
35	01	Bus unit, 2x40mm	6ES7 195-7HB00-0XA0
36	02	Bus unit, 2x40mm	6ES7 195-7HB00-0XA0
37	03	Bus unit, 2x40mm	6ES7 195-7HB00-0XA0
38	04	Bus unit, 2x40mm	6ES7 195-7HB00-0XA0
39	0	PS 307 AC 120/230V, DC 24V/2A	6ES7 307-1BA01-0AA0
40	2	IM 153-2 HF	6ES7 153-2BA02-0XB0
41	01	Bus unit, 2x40mm	6ES7 195-7HB00-0XA0
42	02	Bus unit, 2x40mm	6ES7 195-7HB00-0XA0
43	03	Bus unit, 2x40mm	6ES7 195-7HB00-0XA0
44	04	Bus unit, 2x40mm	6ES7 195-7HB00-0XA0
45	03	Synchronization module up to 10m	6ES7 960-1AA06-0XA0
46	04	Synchronization module up to 10m	6ES7 960-1AA06-0XA0

*				Draw. no. customer			
				Status			
				Sheet	1	From	3
Ind.	Change	Date	Name	Date	18.04.2017	Name	@SETUP
Protection note							

Bills of materials

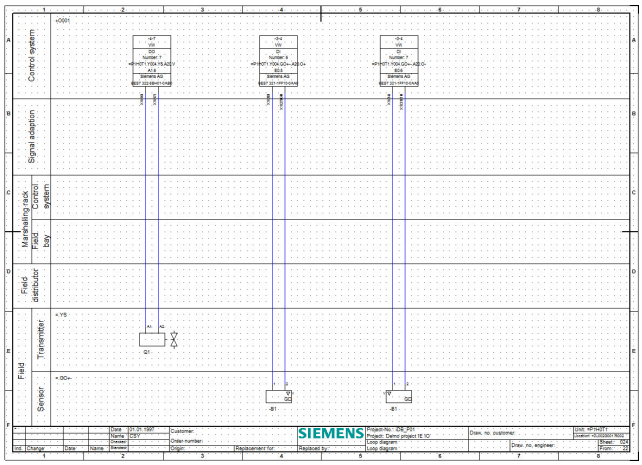

Electrical planning

If electrical planning has been carried out with planning tools from other manufacturers, this data can be imported in Microsoft Excel format using signal or process tag lists.

Benefits

- Reduced customizing and planning time with integrated processes for engineering, automation and operation
- Shorter project terms with consistent and simple data synchronization between engineering and automation
- Increased plant availability with error-free data transfer and system documentation that is always up-to-date
- Increased engineering efficiency and cost reductions with optimized change management

© Siemens AG 2024

Function

Data changes can be undertaken at both ends and exchanged bidirectionally. If the user triggers data exchange, all changes are listed in a comparison and the user can select which changes are to be applied.

The automation hardware, the automation software and their interconnections are generated automatically when signal lists are exported from an external plan.

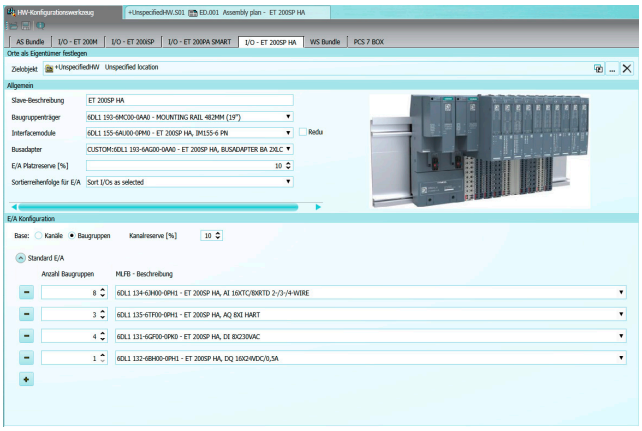

Engineering wizard

Engineering wizards efficiently support hardware engineering. The PAA uses the complete basic functional scope of COMOS products with

- User administration
- Change management with working layers
- Scalability

The PAA automatically generates hardware and software documents for redocumentation of existing SIMATIC PCS 7 projects.

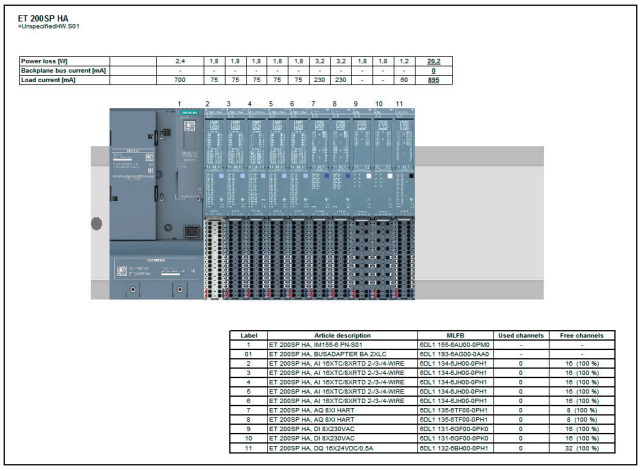

Assembly plan

Function (continued)

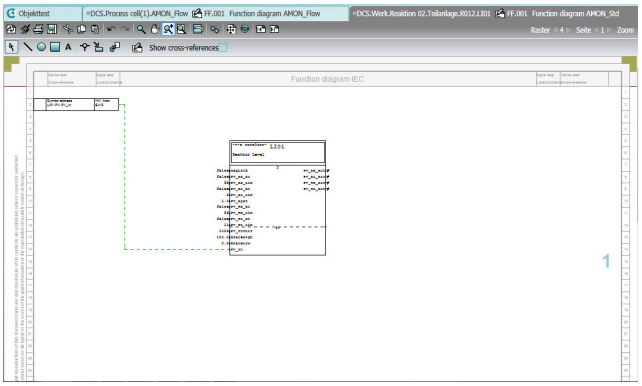

Function diagram

The PAA is thus the first product to offer the direct connection of a DCS system (SIMATIC PCS 7) to an automation-neutral tool for plant engineering (COMOS) and thus represents a significant step towards the digital plant.

More information

Ordering information

The SIMATIC PCS 7 Plant Automation Accelerator (PAA) cannot be ordered through this catalog or the Industry Mall. Please get in touch with your regional contact.

© Siemens AG 2024

Operator System

5

5/2	**Introduction**
5/5	**OS software**
5/6	OS standard software for single station/server/client
5/11	SFC Visualization
5/12	**OS redundancy**
5/19	**Operator control and monitoring via Web**
5/19	SIMATIC PCS 7 Web Server

© Siemens AG 2024

Overview

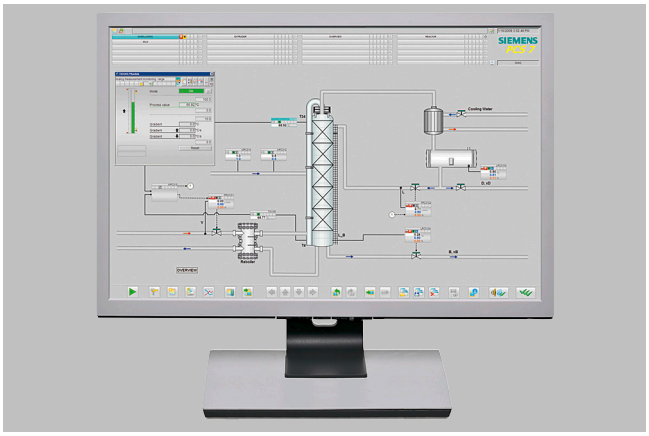

The Operator System of the SIMATIC PCS 7 process control system allows easy and safe control of the process by the operating personnel. The operator can observe the process sequence by means of various views and intervene to control the system when necessary.

The operator system architecture is extremely variable and can be flexibly adapted to different plant architectures and customer requirements.

The basis is perfectly coordinated operator stations for single-user systems (OS single stations) and for multi-user systems with client/server architecture.

The system software of the operator stations can be expanded by cumulative SIMATIC PCS 7 OS Runtime licenses for 100, 1 000 and 5 000 process objects (PO) up to the following configuration limits:

- 8 500 PO per OS single station
- 12 000 POs per OS server (with client/server architecture)

Benefits

- High-performance operator stations based on versatile, robust-SIMATIC Process Control System IPC, optimized for use inIndustrial environments
- Flexible, modular architecture with scalable hardware andsoftware components for
  - Single-user systems (OS single stations) with up to 8 500 process objects
  - Flat system configurations based on a redundantOS single station pairs, expandable with reference stations onup to 8 OS single stations
  - Client/server multi-user systems with up to 18 OS servers/server pairsfor 12 000 process objects (PO) each and up to 40 OS clients
- High-performance archiving system based on Microsoft SQL Server withcircular archives and integrated archive backup, optionally expandablethrough long-term archiving with the Process Historian
- Self-diagnostics of important OS server applications
- Copying of modifications without interfering with ongoingoperation and online testing by selectively loading redundant servers
- Optimized AS/OS communication:

  Data transmission only following change in data, independent of AS reply cycle;suppression of flutter messages
- User-friendly process control and high operational reliability with supportof multi-screen technology
- Extended status displays through combination of status/analog valueswith alarm information
- Highly effective alarm management provides support for operating personnel
  - Assignment of priorities with up to 16 message priorities as additional attribute to the message classes
  - Visual and acoustic suppression of messages that are irrelevant depending on the operating status (dynamic or manual)
  - Suppression of sensor/actuator alarms during commissioning or in case of malfunction
- Central user administration with access control and electronic signature
- Sign-of-life monitoring for lower-level systems connected to the plant bus
- System-wide time synchronization based on UTC (Universal Time Coordinated)

© Siemens AG 2024

Design

All operator stations are based on modern SIMATIC Process Control System IPCs optimized for use as OS single station, OS client or OS server. The SIMATIC Process Control System IPCs are suitable for use in harsh industrial environments and are characterized by powerful industrial PC technology combined with a Windows Desktop operating system (Windows 10 2019/2021 LTSC) or a Windows Server operating system (Windows Server 2019/2022) from Microsoft. Standard components and interfaces from the PC world offer generous scope for system-, customer- or sector-specific options and expansions.

The operating system and the following ES/OS software of the SIMATIC PCS 7 process control system are preinstalled:

- Single station: PCS 7 Engineering Software for AS/OS including OS Runtime software
- Server: PCS 7 OS Software Server
- Client: PCS 7 OS Software Client

You only need the corresponding software licenses in order to use the preinstalled SIMATIC PCS 7 software.

Depending on the customer's particular requirements, you can equip an OS single station, OS server or OS client with optional hardware components, such as:

- Hardware and software components for redundant operation
- Smart card reader for access protection
- Multi-monitor graphics card for operation of up to 4 process monitors
- Process monitors for office and industrial environments

See section "Industrial Workstation/IPC" for ordering data and detailed information on the scope of supply and technology of the SIMATIC Process Control System IPC as well as available options/expansions.

Single-user system (OS single station)

In a single station system architecture, all operation and monitoring functions for a complete project (plant/unit) are concentrated in one station.

This OS single station can be operated on the plant bus together with other single-user systems or parallel to a multi-user system. Redundant operation of two OS single stations (SIMATIC PCS 7 Single Station Redundancy) and their expansion with reference stations into a flat system configuration with up to 8 OS single stations is also possible.

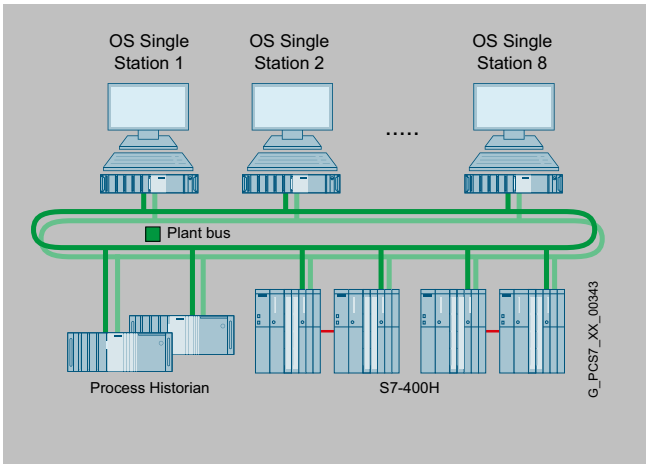

Example of a flat system architecture

Design (continued)

Depending on the version (IE or BCE), the OS single station can be connected to the Industrial Ethernet plant bus via one of the following network components:

- IE: CP 1623 communications module (preinstalled in SIMATIC PCS 7 Industrial Workstation) for communication with max. 64 automation systems
- BCE: Standard Ethernet network adapter (10/100/1000 Mbps) and Basic Communication Ethernet for communication with up to 8 automation systems (no redundancy stations)

Two 10/100/1000 Mbps Ethernet RJ45 ports are always integrated onboard for use as desired.

The OS engineering is located as standard in a separate engineering system.

Multi-user system with client/server architecture

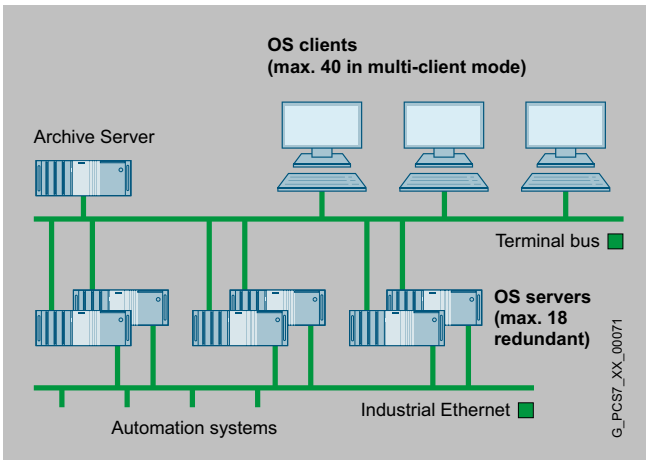

Example of multi-user system

A multi-user system consists of operator stations (OS clients) which receive data (project data, process values, archive data, alarms and messages) from one or more OS servers over a terminal bus. The terminal bus can share the transmission medium with the plant bus or it can be designed as a separate bus (Industrial Ethernet with TCP/IP).

In this architecture, redundant OS Servers may be set up to meet higher availability requirements. Critical applications running on the OS Server are monitored by Health Check for software faults that may trigger redundancy failover. Synchronization of the redundant OS Servers takes place automatically and at high speed.

OS Clients can access the data of not only one OS Server/server pair, but from several OS Servers/pairs of servers simultaneously (multi-client mode). This makes it possible to divide a plant into technological units and to distribute the data accordingly to several OS servers/pairs of servers. In addition to scalability, the advantage of distributed systems is the ability to decouple plant units from each other, which results in higher availability.

The OS Servers are designed in addition with client functions which permit them to access the data (archives, messages, tags, variables) from the other OS Servers of the multi-user system. This means that process displays on one OS Server can also be linked with variables on other OS Servers (area-independent displays).

Like the OS single stations, OS servers can be connected to the Industrial Ethernet plant bus using one of the following network components:

- IE: CP 1623 communications module (preinstalled in SIMATIC PCS 7 Industrial Workstation) for communication with max. 64 automation systems

© Siemens AG 2024

Design (continued)

- BCE: Standard Ethernet network adapter (10/100/1000 Mbps) and Basic Communication Ethernet for communication with up to 8 automation systems (no redundancy stations)

Two 10/100/1000 Mbps Ethernet RJ45 ports onboard can be used to connect to the terminal bus.

Data archiving

The OS single stations and OS servers already include a high-performance archiving system, configurable in runtime, based on Microsoft SQL Server with circular archives for short-term archiving of process values (typically for 1 to 4 weeks) and messages/events (typically for 2 months). This may be combined with an external data archiving system for long-term data storage. The Process Historian offered in the section "Process data archiving and reporting" is available for this purpose.

The archive data can be saved on all memory media supported by the operating system, for example on a NAS drive.

Technical specifications

Definitions	
OS tag	An OS tag or parameter is a defined memory location required for operator control and monitoring with the Operator System; values can be written into it and read from it (e.g. setpoint, actual value etc.).
Process object (PO)	A process object (PO) is synonymous with a block that can be operated and monitored. A PO usually has several OS tags (which can be operated and monitored). The number of OS tags differs depending on the block type. For example, motors or valves require fewer tags than closed-loop controls or dosing units.
Licensing	Licensing and license verification of the OS software for SIMATIC PCS 7 are based on the process objects. Every block fulfilling the following criteria is counted and calculated as a PO: • The block is not a driver block. • The block can be operated and monitored. • This block can handle messages. The license verification also takes into account the sum of all OS tags used.

OS quantity framework	
Max. number of OS single stations	8
Max. number of OS servers/pairs of servers	18
Max. number of automation systems per OS server/pair of servers	64
Max. number of OS clients in multi-client mode[1] per multi-user system	40
Max. number of monitors per operator station with multi-channel operation	4
Max. number of OS areas	64
Max. number of windows per monitor	1 to 16 (adjustable)
Number of trends per trend window	10
Selection time for OS area display (100 process symbols)	< 2 s
Max. number of configurable messages per server	200 000
Max. number of configurable process objects	Approx. 216 000
Max. number of configurable process tags	Approx. 128 000[2]
Integral high-performance archive system (circular buffer), based on Microsoft SQL server, for:	
• Process value archiving (per OS server/single station)	Approx. 1 500/s
• Message archiving (per OS server/single station)	Permanent load approx. 10/s Reporting surge approx. 3 000 / 4 s

[1] If every OS client has access to all OS servers/pairs of servers
[2] Approx. 300 000 I/O

© Siemens AG 2024

Overview

The SIMATIC Process Control System IPC, the operating system, and the OS software are matched to one another in accordance with the application as OS single station, OS server or OS client.

Design

The OS standard software is pre-configured for the corresponding OS single station, OS server or OS client as the target system, and preinstalled on it. You only need the corresponding software licenses in order to use it.

This basic level can be extended using additive software components and licenses.

You can equip OS single stations and OS clients, for example, with SIMATIC PCS 7 SFC Visualization and SIMATIC S7 Safety Matrix Viewer.

Redundant system configurations are also possible with OS single stations and OS servers. See "OS redundancy" in the "Operator System" section for details.

The following tables provide a selection aid for ordering an operator station. Depending on whether a redundant or non-redundant design is selected, the tables indicate the respectively required number.

- SIMATIC Process Control System IPC
- Licenses for OS standard software
- Volume licenses (quantity options)
- Licenses for optional supplementary OS software

Single-user system		
OS single station	Redundancy	
with Windows 10 Enterprise 2019/2021 LTSC operating system	without	with
SIMATIC Process Control System IPC for ES/OS single station		
• With BCE communication for up to 8 automation systems	1	2
• With Industrial Ethernet (IE) communication	1	2
Additional IE communication software for SIMATIC Process Control System IPC with IE communication		
SIMATIC NET HARDNET-IE S7-REDCONNECT PowerPack	1	2
OS standard software		
SIMATIC PCS 7 OS Software Single Station	1	–
SIMATIC PCS 7 Single Station Redundancy	–	1
Volume licenses and supplementary OS software (optional)		
SIMATIC PCS 7 OS Runtime License for adding OS Runtime POs	1	2
SIMATIC PCS 7 OS Archive for expansion of short-term circular buffer archive	1	2
SIMATIC PCS 7 SFC Visualization	1	2
SIMATIC S7 Safety Matrix Viewer	1	2

Multi-user system with client/server architecture		
OS server	Redundancy	
with Windows Server 2019/2022 operating system	without	with
SIMATIC Process Control System IPC for OS server		
• With BCE communication for up to 8 automation systems (no redundancy stations)	1	2
• With Industrial Ethernet communication	1	2
Additional IE communication software for SIMATIC Process Control System IPC with IE communication		
SIMATIC NET HARDNET-IE S7-REDCONNECT PowerPack	1	2
OS standard software		
SIMATIC PCS 7 OS Software Server	1	–
SIMATIC PCS 7 OS Software Server Redundancy	–	1

Design (continued)

Multi-user system with client/server architecture		
Volume licenses (optional)		
SIMATIC PCS 7 OS Runtime License for adding OS Runtime POs	1	2
SIMATIC PCS 7 OS Archive for expansion of short-term circular buffer archive	1	2
OS client		
with Windows 10 Enterprise 2019/2021 LTSC operating system; connection for terminal bus onboard		
SIMATIC Process Control System IPC for OS client		
• SIMATIC Process Control System IPC for OS client, alternatively with onboard standard graphics or with multi-monitor graphics card	1	
• SIMATIC PCS 7 OS Client IPC BX-39A / PX-39A (Microbox)	1	
OS standard software		
SIMATIC PCS 7 OS Software Client	1	
Supplementary OS software (optional)		
SIMATIC PCS 7 SFC Visualization	1	
SIMATIC S7 Safety Matrix Viewer	1	
SIMATIC PCS 7 Logic Matrix Viewer (see "Engineering", "SIMATIC PCS 7 Logic Matrix" section)	1	

Note on Microsoft SQL Server software

The "SQL Server" software from Microsoft which is delivered together with SIMATIC PCS 7 is exclusively intended for this process control system.

© Siemens AG 2024

Overview

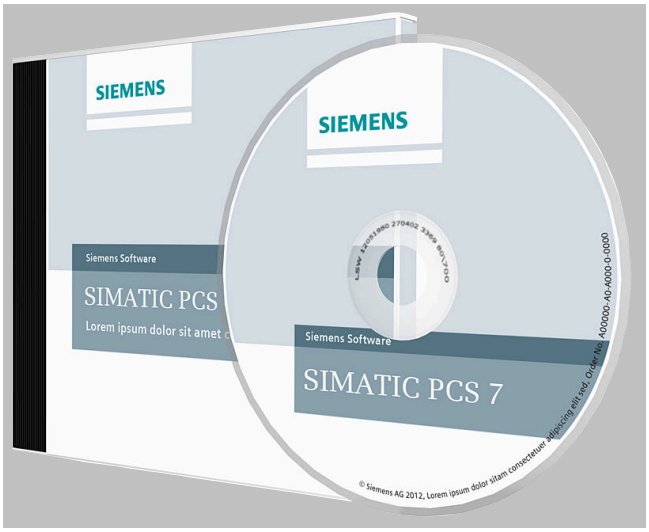

PCS 7 software incl. packaging

The OS standard software is adapted to the SIMATIC Process Control System IPCs offered (OS single station, OS server and OS client).

It can be adapted to plants of various sizes by adding cumulative SIMATIC PCS 7 OS Runtime licenses for sets of 100, 1 000 and 5 000 process objects (PO). The expansion limits are

- 8 500 PO per OS single station
- 12 000 PO per OS server

The high-performance circular buffer archiving system integrated in the OS standard software for OS single station and OS server for temporary archiving can be expanded up to the maximum limit of 10 000 tags with cumulative SIMATIC PCS 7 OS volume licenses.

The OS standard software for a redundant pair of OS servers or two redundant OS single stations is combined in a package (SIMATIC PCS 7 OS Software Server Redundancy or SIMATIC PCS 7 OS Software Single Station Redundancy). See section "OS redundancy" for details.

Subsequent conversion of the software license from OS Single Station to OS Server

It frequently happens in practice that systems based on OS Single Stations are later expanded to client-server configurations. The SIMATIC PCS 7 OS Software ConversionPack Single Station to Server allows you to subsequently convert the software license of your existing OS single station to an OS server license.

© Siemens AG 2024

Function

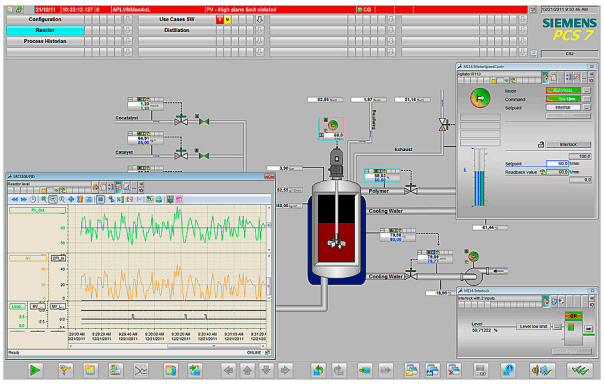

OS process control with freely-positionable windows

Graphical user interface (GUI)

The pre-defined user interface of the Operator System has all the features typical of a control system. It is multilingual, clearly structured, ergonomic and easy to understand. Operators can survey the process extremely easily, and rapidly navigate between different views of the plant. The system supports them in this process with hierarchical display structures that can be configured as required. These facilitate the direct selection of lower-level areas during process control. The current position within the hierarchy can always be recognized in a window of the Picture Tree Manager.

Process displays and process tags can also be called directly by their name, or by a "Loop-in-alarm" starting from a selected message. An online language selector permits the user to change the display language during runtime.

The representative functional display of the plant is supported by a high-quality, modern design. The global appearance can be set using pre-defined or user-specific designs: color palette, colors, styles (fill patterns), optical effects (2D/3D, shading, transparency, colored identification of an image object when selected, etc.). These can be changed locally for each image object.

The design is also defined using a wide range of attractive elements provided by the Graphics Designer during configuration in the engineering system.

Process tag browser

The SIMATIC PCS 7 process tag browser enables status information from APL-based process tags to be displayed, filtered and sorted. Process tags that have a certain status can then be quickly identified and selected. The faceplate of a process tag can be selected directly in the process display via the Loop In function. The query results of the process tag browser can be saved and printed out.

TrendControls function for table displays and curve displays

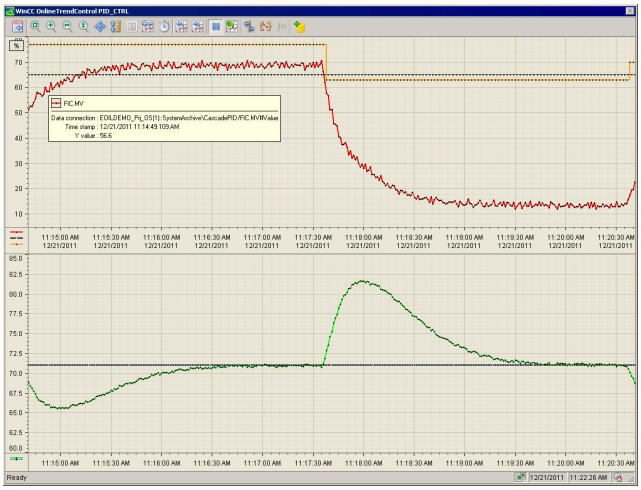

Trend window on the operator station

With TrendControls the operator can display archived values:

- Archive tags from the process value archive
- Online values of process tags from tag management

The display is in relation to time (table/trend window) or in relation to another value (function window).

The time can be defined statically (absolute, as configured) or dynamically (in relation to the actual system time) as:

- Start and end times
- Start time and period
- Start time and number of measuring points

All TrendControls have scrolling functions and a function for directly selecting the start or end.

During runtime, operators can individually adapt the TrendControls functions which have already been pre-defined during plant configuration, and save the settings globally or user-specific. They are able to change the data link during runtime, and to access other data. It is also possible to integrate exported archive databases online.

© Siemens AG 2024

Function (continued)

APL Operator Trend Control

The APL Operator Trend Control coordinated with the Advanced Process Library offers another option to the operator for flexible online compilation of trends. The values for the trend display are selected with a simple mouse click, in which case the value range and unit are adopted automatically by the process tag. The selection made can be subsequently adjusted by adding and removing values. In addition, messages corresponding to the trend selection can be called.

AlarmControl function for message display and processing

Up to 200 000 messages can be configured per OS single station / OS server:

Pre-defined system messages, triggered by a system event

- Individual or group messages, initiated by a change in process states
- Operator input messages, resulting from the manual operation of objects

The message system integrated in the Operator System records these process messages and local events, saves them in message archives, and displays them using message lists.

Flexible setting options for audio output support message signaling with a sound card or by controlling external horns via a signal module.

The "Loop-in-alarm" and "Select display using process tag" functions support the quick evaluation and resolution of faults. Using "Loop-in-alarm", the operator can jump directly from a message selected in the message window to the process display with the object which caused the fault, and can then call up the associated faceplate (loop display) through the process tag whose block icon is colored (cyan). The faceplate window (loop display) can be anchored so that it remains visible even when the display is changed.

Group displays visually signal the messages currently present in the process display. They also provide information on whether messages are disabled or not.

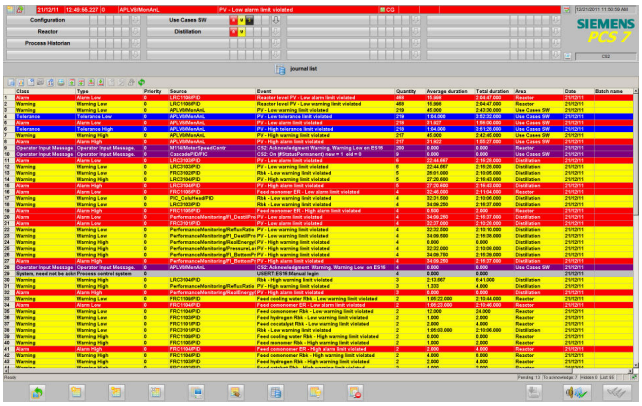

Operator station message list

Reporting and logging system

The project created during configuration is documented with the reporting system. The logging system allows an easy-to-read printout of data acquired during operation. Different types of pre-defined logs are available:

- Message sequence log
- Message and archive log
- Measured value log
- Operator activity log
- System message log
- User log

However, a page layout editor can be used to create completely new page layouts or to individually adapt pre-defined ones. Log objects to be printed are simply selected from the editor's object palette, positioned and configured.

Data archiving

The high-performance archiving system, configurable at runtime, in the OS standard software of OS single stations and OS servers temporarily records process values and messages/events (alarms) in circular archives. Intervals of approximately 1 to 4 weeks for process values and approximately 2 months for alarms are typical for this short-term archiving. Data from the circular archives can be exported time-controlled or event-controlled to the Process Historian for permanent archiving. See the "Process data archiving and reporting" section for information on this

Central user administration, access control and electronic signature

With SIMATIC Logon, the Operator System has central user administration with access control that complies with the validation requirements of 21 CFR Part 11. The administrator can divide the users into groups and assign differently defined access rights (roles) to these groups. The operator obtains the specific rights when logging on within the scope of the access control. Apart from the keyboard, an optional smart card reader, for example, can be used as the logon device. In addition, SIMATIC Logon offers the "electronic signature" function.

SIMATIC Logon is fully integrated in SIMATIC PCS 7. In the context of SIMATIC PCS 7, no software licenses need to be ordered for this. For more information on SIMATIC Logon as well as ordering data for an optional smart card reader, see "Expansion components, Smart card reader" in the "Industrial Workstation/IPC" section.

© Siemens AG 2024

Selection and ordering data

OS software Single Station	
Runs with the following operating systems (see SIMATIC PCS 7 Readme for the latest information[1]):	
• Windows 10 Enterprise 2019/2021 LTSC	
SIMATIC PCS 7 OS software Single Station V10.0 **incl. 100 OS Runtime PO** 5 languages (English, German, French, Italian, Spanish), software class A, single license for 1 installation With SIMATIC PCS 7 Software Media Package	
• Goods delivery License key on USB flash drive, Certificate of License, bundled with 1 × SIMATIC PCS 7 Software Media Package per order item	6ES7658-2AA78-0YA0
• Online delivery License key download and online Certificate of License, combined with SIMATIC PCS 7 Software Media Package (software download and online Certificate of License) : Email address required!	6ES7658-2AA78-0YH0
SIMATIC PCS 7 OS software Single Station ASIA V10.0 **incl. 100 OS Runtime PO** 2 languages (English, Chinese), software class A, single license for 1 installation With SIMATIC PCS 7 Software Media Package ASIA Goods delivery ASIA license key on USB hardlock and Certificate of License, bundled with 1 × SIMATIC PCS 7 Software Media Package ASIA per order item	
• ASIA	6ES7658-2AA78-0CA0
• SN ASIA (including SOFTNET RED-CONNECT)	6ES7658-2AA78-6CA0
OS software Server	
Runs with the following operating systems (see SIMATIC PCS 7 Readme for the latest information[1]):	
• Windows Server 2019/2022 Standard Edition	
SIMATIC PCS 7 OS software Server V10.0 **incl. 100 OS Runtime PO** 5 languages (English, German, French, Italian, Spanish), software class A, single license for 1 installation With SIMATIC PCS 7 Software Media Package	
• Goods delivery License key on USB flash drive, Certificate of License, bundled with 1 × SIMATIC PCS 7 Software Media Package per order item	6ES7658-2BA78-0YA0
• Online delivery License key download and online Certificate of License, combined with SIMATIC PCS 7 Software Media Package (software download and online Certificate of License) : Email address required!	6ES7658-2BA78-0YH0

Selection and ordering data (continued)

SIMATIC PCS 7 OS software Server ASIA V10.0 **incl. 100 OS Runtime PO** 2 languages (English, Chinese), software class A, single license for 1 installation With SIMATIC PCS 7 Software Media Package ASIA Goods delivery ASIA license key on USB flash drive and Certificate of License, bundled with 1 × SIMATIC PCS 7 Software Media Package ASIA per order item	
• ASIA	6ES7658-2BA78-0CA0
• SN ASIA (including SOFTNET RED-CONNECT)	6ES7658-2BA78-6CA0
Volume licenses (quantity options)	
Runtime licenses for PO expansion for OS software Single Station/OS software Server	
SIMATIC PCS 7 OS Runtime License For extending the OS Runtime POs, cumulative Language-neutral, software class A, single license for 1 installation Without SIMATIC PCS 7 Software Media Package	
• Goods delivery License key on USB flash drive and Certificate of License	
- 100 POs	6ES7658-2XA00-0XB0
- 1 000 POs	6ES7658-2XB00-0XB0
- 5 000 POs	6ES7658-2XC00-0XB0
• Online delivery License key download and online Certificate of License : Email address required!	
- 100 POs	6ES7658-2XA00-0XH0
- 1 000 POs	6ES7658-2XB00-0XH0
- 5 000 POs	6ES7658-2XC00-0XH0
Expansion of integrated high-performance circular buffer archive (512 tags) of OS Single Station and OS Server	
SIMATIC PCS 7 OS Archive Cumulative archive licenses, independent of language, software class A, single license for 1 installation Without SIMATIC PCS 7 Software Media Package	
• Goods delivery License key on USB flash drive and Certificate of License	
- 1 500 tags	6ES7658-2EA00-2YB0
- 5 000 tags	6ES7658-2EB00-2YB0
- 10 000 tags	6ES7658-2EC00-2YB0
- 30 000 tags	6ES7658-2ED00-2YB0
• Online delivery License key download and online Certificate of License : Email address required!	
- 1 500 tags	6ES7658-2EA00-2YH0
- 5 000 tags	6ES7658-2EB00-2YH0
- 10 000 tags	6ES7658-2EC00-2YH0
- 30 000 tags	6ES7658-2ED00-2YH0

© Siemens AG 2024

Selection and ordering data (continued)

OS software Client Runs with the following operating systems (see SIMATIC PCS 7 Readme for the latest information[1]): • Windows 10 Enterprise 2019/2021 LTSC	
SIMATIC PCS 7 OS Software Client V10.0 5 languages (English, German, French, Italian, Spanish), software class A, floating license for 1 user Without SIMATIC PCS 7 Software Media Package	
• Goods delivery License key on USB flash drive and Certificate of License	6ES7658-2CX78-0YB5
• Online delivery License key download and online Certificate of License : Email address required!	6ES7658-2CX78-0YH5
SIMATIC PCS 7 OS Software Client ASIA V10.0 2 languages (English, Chinese), software class A, floating license for 1 user Without SIMATIC PCS 7 Software Media Package ASIA	
• Goods delivery ASIA license key on USB flash drive and Certificate of License	6ES7658-2CX78-0CB5
Conversion of the software license from OS single station to OS server Runs with the following operating systems (see SIMATIC PCS 7 Readme for the latest information[1]): • Windows Server 2019/2022 Standard Edition	
SIMATIC PCS 7 OS software ConversionPack Single Station to Server V10.0 For conversion of an operator station from OS single station to OS server Supports all languages of the OS software Single Station, software class A, single license for 1 installation Without SIMATIC PCS 7 Software Media Package	
• Goods delivery License key on USB flash drive and Certificate of License	6ES7658-2BA78-0YD0
• Online delivery License key download and online Certificate of License : Email address required!	6ES7658-2BA78-0YJ0

[1] See "Software Media and Logistics" section, under "System documentation"
For more information on the Software Media Package, see section "Software Media and Logistics", under "Software Packages".

More information

Regional product variants

All SIMATIC PCS 7 software products are designed for international use, in other words there is only one product variant for worldwide use and this is offered in up to 5 languages: English, German, French, Italian and Spanish. However, the number of supported languages is not standard; it can vary from product to product.

In addition, a regional "ASIA" product variant will also be offered for the SIMATIC PCS 7 Software Media Package and specific SIMATIC PCS 7 software products of the "Engineering System" and "Operator System" system components. The ASIA products are available in two languages: English and Chinese (simplified). They are explicitly identified in the name by the suffix "ASIA". If a product listed in this catalog does not have the suffix "ASIA" in its name, it can always be used globally. However, the following restriction applies: If a regional ASIA product is offered, the counterpart for international use does not support the Asian languages (currently Chinese simplified) present in the ASIA product. The products for international use, i.e. products without the suffix "ASIA", are not intended as the basis for Runtime systems with fonts in Asian languages.

The following special points must be observed as a result of the definition of separate products for installation software and licenses. The SIMATIC PCS 7 installation software is available in the form of two data storage medium packages:

- SIMATIC PCS 7 Software Media Package
- SIMATIC PCS 7 Software Media Package ASIA

The specific ASIA software licenses harmonize exclusively with the SIMATIC PCS 7 Software Media Package ASIA. SIMATIC PCS 7 software licenses for which there is no ASIA counterpart can be used with both SIMATIC PCS 7 Software Media Packages

© Siemens AG 2024

Overview

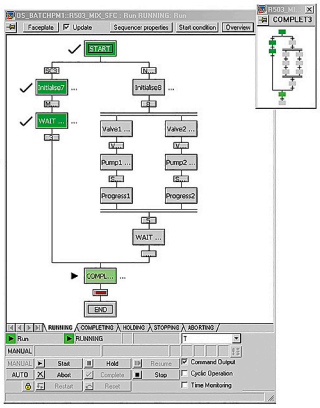

The OS standard software can be expanded with the SIMATIC PCS 7 SFC Visualization. This allows you to display and operate configured sequential controls on the engineering system.

In an overview display it is possible, for example, to open step and transition displays and to present step comments or dynamically supplied step enabling conditions.

Selection and ordering data

SIMATIC PCS 7 SFC Visualization V10.0 For displaying and operating SFC sequence controls on an operator station 6 languages (English, German, French, Italian, Spanish, Chinese), software class A Runs with the following operating systems (see SIMATIC PCS 7 Readme for the latest information[1]): • Windows 10 Enterprise 2019/2021 LTSC • Windows Server 2019/2022 Standard Edition Floating license for 1 user, without SIMATIC PCS 7 Software Media Package	
• Goods delivery License key on USB flash drive and Certificate of License	**6ES7652-0XD78-2YB5**
• Online delivery License key download and online Certificate of License : Email address required!	**6ES7652-0XD78-2YH5**

[1] See "Software Media and Logistics" section, under "System documentation"

© Siemens AG 2024

Overview

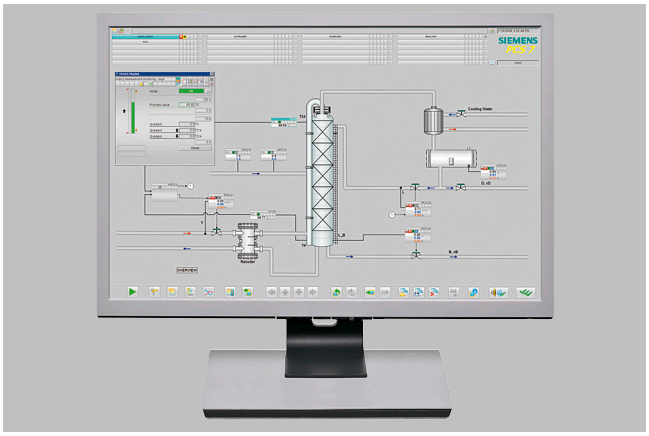

SIMATIC PCS 7 Operator Station

OS single stations and OS servers can have a redundant design if necessary. The following program packages are available:

- SIMATIC PCS 7 Single Station Redundancy for setup of redundantOS single stations
- SIMATIC PCS 7 Server Redundancy for setup of redundantOS servers

For optimizing internal communication, connect the two stations of the redundant OS single station/OS server pair to each other via an Ethernet cable, e.g. cross-over network cable with RJ45 connectors (up to 100 m). The cable material is to be ordered separately in each case:

Depending on the ambient conditions and the distance involved, the Ethernet connection between the two redundant stations can be implemented either as an electrical or optical connection. For more information, refer to the "SIMATIC PCS 7 High Availability Process Control Systems" manual; for suitable cable material and other accessories, see Catalog IK PI (Industrial Communication).

What further components are required depends on the plant architecture. The design of the plant bus and terminal bus is of particular importance, as well as the type and number of subordinate automation systems. The maximum requirements are determined by the redundant configuration shown in the figure with a fault-tolerant automation system and two redundant rings each for the plant bus and terminal bus.

© Siemens AG 2024

Design

The following table provides an overview of which components are required for a redundant OS Single Station or OS pair of servers depending on certain criteria:

Hardware and software components		Up to 8 AS per Single Station or server pair	9 to 64 AS per Single Station or server pair	Min. 1 redundant AS
SIMATIC Process Control System IPC, version ES/OS single station or OS server				
• Incl. Ethernet network adapter 10/100/1000 Mbps and BCE communication		2	–	–
• Incl. CP 1623 and SIMATIC NET HARDNET-IE S7		2 (alternative to BCE)	2	2
Software				
SIMATIC PCS 7 Single Station/Server Redundancy		1	1	1
SIMATIC NET HARDNET-IE S7-REDCONNECT PowerPack		–	–	2
Connection to redundant plant bus				
• BCE	Desktop adapter network adapter	2	–	–
• CP 1623	Communications module	2 (alternative to BCE)	2	2
	SIMATIC NET HARDNET-IE S7	2 (alternative to BCE)	2	2
	SIMATIC NET HARDNET-IE S7-REDCONNECT (1 ring)	–	–	2
	SIMATIC NET HARDNET-IE S7-REDCONNECT (2 rings)	2	2	2
Connection to redundant terminal bus with PRP (2 rings)				
SOFTNET-IE RNA communication software		1 × per PCS 7 station on the terminal bus	1 × per PCS 7 station on the terminal bus	1 × per PCS 7 station on the terminal bus
Integration of non-PRP-enabled terminal devices in redundant terminal bus with PRP				
SCALANCE X204RNA		1 × for 2 terminal devices	1 × for 2 terminal devices	1 × for 2 terminal devices

Connection to plant bus

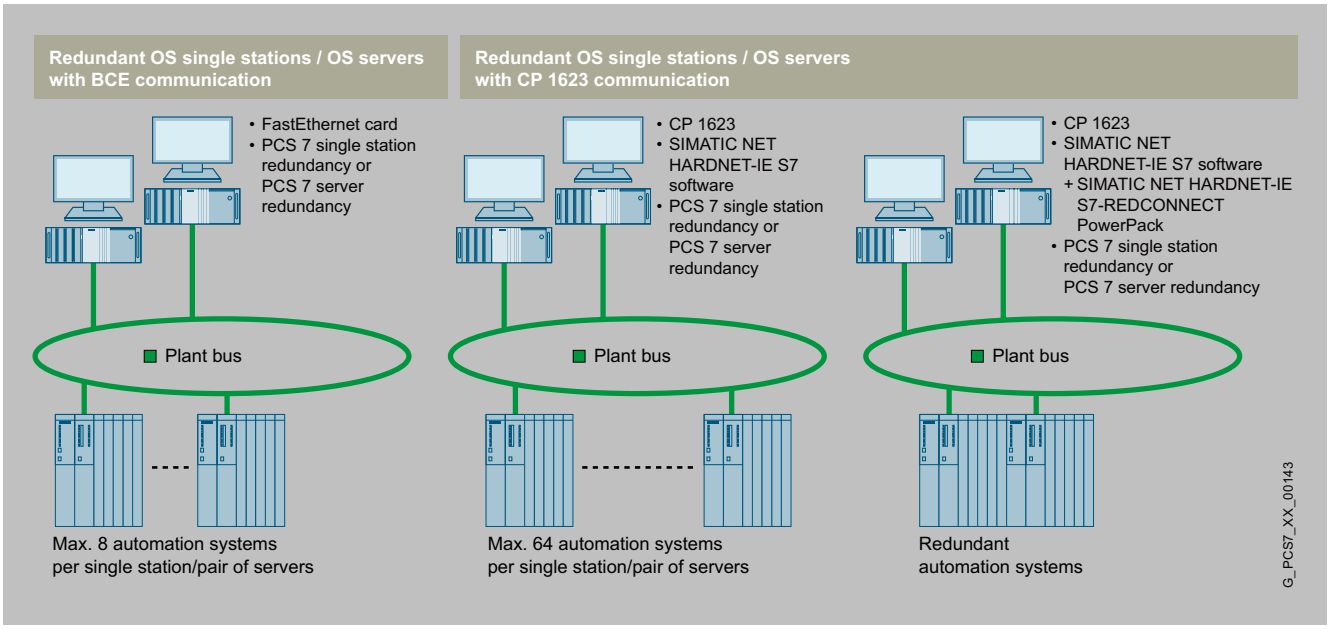

Components for connection of redundant OS Single Stations / OS Servers on the plant bus

© Siemens AG 2024

Design (continued)

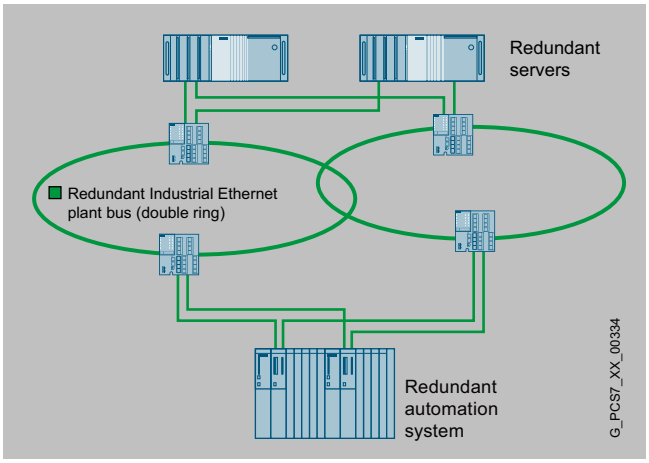

Redundant plant bus

The Operator Systems (Single Stations or Servers) communicate with the automation systems via the Industrial Ethernet plant bus. The following special points must be observed for redundant configurations:

- In principle, BCE communication via a 10/100/1000 Mbps Ethernet network adapter is also sufficient for redundant operator stations. This allows up to 8 automation systems to be connected per server pair (AS single stations only, no AS redundancy stations). The BCE license is included for the BCE variants of the SIMATIC PCS 7 Industrial Workstation. It is also valid for an additional desktop adapter network card.
- Industrial Ethernet communication via CP 1623 (in IE variant, the SIMATIC Process Control System IPC is preinstalled) is required in the following situations:
  - The number of automation systems per OS is larger than 8.
  - Redundant automation systems (AS redundancy stations) are used.
- The IE variants of the SIMATIC Process Control System IPC are equipped with CP 1623 and SIMATIC NET HARDNET-IE S7 communication software, licensed for up to four CP 1623 (4x license). If lower-level AS redundancy stations are to be connected, however, SIMATIC NET HARDNET-IE S7-REDCONNECT is required. The SIMATIC NET HARDNET-IE S7-REDCONNECT PowerPack (4x license) product is suitable as a functional extension.
- If an operator station with BCE communication is to be upgraded for operation with AS redundancy stations, a CP 1623 communications module is required in addition to the SIMATIC NET HARDNET-IE S7-REDCONNECT (4x license).
- If the plant bus is to be designed as a redundant dual ring, you require two interface modules (2 x Ethernet network adapters 10/100/1000 Mbps or 2 x CP 1623) per OS single station or OS server.

The communication software for CP 1623 is always supplied with the SIMATIC PCS 7 software and is installed in line with the operating system.

In order to activate this communication software, you may need additional licenses for the following communication products:

- SIMATIC NET HARDNET-IE S7
- SIMATIC NET HARDNET-IE S7-REDCONNECT
- SIMATIC NET HARDNET-IE S7-REDCONNECT PowerPack.

Connection to terminal bus

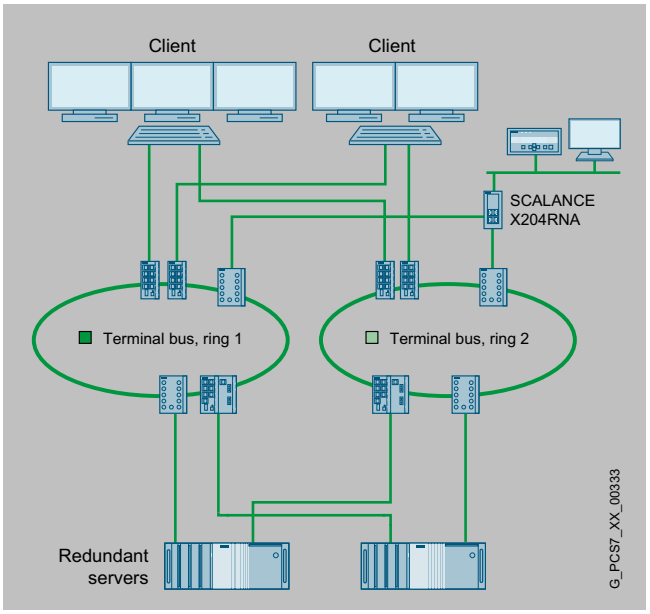

Redundant terminal bus

You can connect clients and servers to the terminal bus using integrated Industrial Ethernet interface modules or a desktop adapter network card.

A configuration with two separate rings is recommended for the redundant, high-availability terminal bus. Communication is performed in this case using the Parallel Redundancy Protocol (PRP) in accordance with IEC 62439-3. Each PCS 7 station should be connected to one of two Industrial Ethernet interface modules on each of the two separate rings.

The SIMATIC NET SOFTNET-IE RNA communication software on the redundantly connected PCS 7 stations organizes communication processes based on PRP. Therefore, SIMATIC NET SOFTNET-IE RNA communication software is required on each of the redundantly connected PCS 7 stations.

Connecting non-PRP-enabled devices

Non-PRP-enabled terminal devices, which only have an Industrial Ethernet connection, can be integrated into a redundant, high-availability terminal bus with PRP protocol using the required RUGGEDCOM RSG900 switches. Two product variants of the RUGGEDCOM RSG900 are available for this:

- RUGGEDCOM RSG907R

  network access in metal enclosure with 4x optical ports for connection of up to four non-PRP-enabled terminal devices and two optical/electrical combo ports for network connection to redundant networks
- RUGGEDCOM RSG909R

  power access in metal enclosure with 6x electrical terminal ports and two optical/electrical combo ports for network connection of up to two non-PRP-enabled terminal devices to redundant networks

RUGGEDCOM RSG900 is typically installed with the stations to be connected in a control cabinet.

For more information and technical specifications for the two RUGGEDCOM product variants, see Catalog IK PI.

© Siemens AG 2024

Design (continued)

For details on redundant SIMATIC PCS 7 configurations, refer to the manual "High Availability Process Control Systems".

Subsequent conversions

It is common practice to retroactively change or expand a plant. The following SIMATIC PCS 7 OS Software ConversionPacks support both retrofitting of the redundancy functionality and conversion from redundant OS single stations to redundant OS servers:

- SIMATIC PCS 7 OS Software ConversionPack 2x Single Station to Single Station Redundancy for the conversion of two OS single stations to OS single station redundancy
- SIMATIC PCS 7 OS Software ConversionPack 2x Server to Server Redundancy for the conversion of two OS servers to OS server redundancy
- SIMATIC PCS 7 OS Software ConversionPack Single Station Redundancy for the conversion of two redundant OS single stations from OS single station redundancy to OS server redundancy

© Siemens AG 2024

Selection and ordering data

Setup of redundant OS Single Stations	
SIMATIC PCS 7 OS Software Single Station Redundancy V10.0, incl. 100 OS Runtime PO 5 languages (English, German, French, Italian, Spanish), software class A, runs with Windows 10 Enterprise 2019/2021 LTSC (see SIMATIC PCS 7 Readme for the latest information[1)]), single license for 2 installations With SIMATIC PCS 7 Software Media Package	
• Goods delivery License key on USB flash drive, Certificate of License, bundled with 1 × SIMATIC PCS 7 Software Media Package per order item	6ES7652-3AA78-2YA0
• Online delivery License key download and online Certificate of License, combined with SIMATIC PCS 7 Software Media Package (software download and online Certificate of License) : Email address required!	6ES7652-3AA78-2YH0
SIMATIC PCS 7 OS Software Single Station Redundancy ASIA V10.0, incl. 100 OS Runtime PO 2 languages (English, Chinese), software class A, runs with Windows 10 Enterprise 2019 LTSC (see SIMATIC PCS 7 Readme for the latest information[1)]), single license for 2 installations Goods delivery ASIA license key on USB flash drive and Certificate of License, bundled with 1 × SIMATIC PCS 7 Software Media Package ASIA per order item	
• ASIA	6ES7652-3AA78-2CA0
• SN ASIA (includingSOFTNET REDCONNECT)	6ES7652-3AA78-6CA0
Setup of redundant OS servers	
SIMATIC PCS 7 OS software Server Redundancy V10.0, inc. 100 OS Runtime PO 5 languages (English, German, French, Italian, Spanish), software class A, runs with Windows Server 2019/2022 Standard Edition (see SIMATIC PCS 7 Readme for the latest information[1)]), single license for 2 installations With SIMATIC PCS 7 Software Media Package	
• Goods delivery License key on USB flash drive, Certificate of License, bundled with 1 × SIMATIC PCS 7 Software Media Package per order item	6ES7652-3BA78-2YA0
• Online delivery License key download and online Certificate of License, combined with SIMATIC PCS 7 Software Media Package (software download and online Certificate of License) : Email address required!	6ES7652-3BA78-2YH0

Selection and ordering data (continued)

SIMATIC PCS 7 OS Software Server Redundancy ASIA V10.0, inc. 100 OS Runtime PO 2 languages (English, Chinese), software class A, runs with Windows Server 2019/2022 Standard Edition (see SIMATIC PCS 7 Readme for the latest information[1)]), single license for 2 installations With SIMATIC PCS 7 Software Media Package ASIA Goods delivery ASIA license key on USB flash drive and Certificate of License, bundled with 1 × SIMATIC PCS 7 Software Media Package ASIA per order item	
• ASIA	6ES7652-3BA78-2CA0
• SN ASIA (including SOFTNET REDCONNECT)	6ES7652-3BA78-6CA0
Volume licenses (quantity options)	
Runtime licenses for PO expansion for SIMATIC PCS 7 OS Single Station/OS Server (cumulative); 2 required for each	
SIMATIC PCS 7 OS Runtime License For extending the OS Runtime POs, cumulative Language-neutral, software class A, single license for 1 installation Without SIMATIC PCS 7 Software Media Package	
• Goods delivery License key on USB flash drive and Certificate of License	
- 100 POs	6ES7658-2XA00-0XB0
- 1 000 POs	6ES7658-2XB00-0XB0
- 5 000 POs	6ES7658-2XC00-0XB0
• Online delivery License key download and online Certificate of License : Email address required!	
- 100 POs	6ES7658-2XA00-0XH0
- 1 000 POs	6ES7658-2XB00-0XH0
- 5 000 POs	6ES7658-2XC00-0XH0
Expansion of integrated high-performance circular buffer archive (512 tags) of OS Single Station and OS Server; 2 licenses required for each	
SIMATIC PCS 7 OS Archive Cumulative archive licenses, independent of language, software class A, single license for 1 installation Without SIMATIC PCS 7 Software Media Package	
• Goods delivery License key on USB flash drive and Certificate of License	
- 1 500 tags	6ES7658-2EA00-2YB0
- 5 000 tags	6ES7658-2EB00-2YB0
- 10 000 tags	6ES7658-2EC00-2YB0
- 30 000 tags	6ES7658-2ED00-2YB0

© Siemens AG 2024

Selection and ordering data (continued)

• Online delivery License key download and online Certificate of License : Email address required!	
- 1 500 tags	6ES7658-2EA00-2YH0
- 5 000 tags[2)]	6ES7658-2EB00-2YH0
- 10 000 tags	6ES7658-2EC00-2YH0
- 30 000 tags	6ES7658-2ED00-2YH0
Conversion of two OS single stations to redundant OS single stations	
SIMATIC PCS 7 OS Software ConversionPack 2x Single Station to Single Station Redundancy V10.0 For conversion of two OS single stations to OS single station redundancy Supports all languages of the OS software single station, software class A, runs with Windows 10 Enterprise 2019/2021 LTSC (see SIMATIC PCS 7 Readme for the latest information[1)]), single license for 2 installations Without SIMATIC PCS 7 Software Media Package	
• Goods delivery License key on USB flash drive and Certificate of License	6ES7652-3AA78-2YD0
• Online delivery License key download and online Certificate of License : Email address required!	6ES7652-3AA78-2YJ0
Conversion of two redundant OS single stations to redundant OS servers	
SIMATIC PCS 7 OS Software ConversionPack Single Station Redundancy to Server Redundancy V10.0 For the conversion of two redundant OS single stations from OS single station redundancy to OS server redundancy Supports all languages of the OS software Single Station Redundancy, software class A, runs with Windows Server 2019/2022 Standard Edition (see SIMATIC PCS 7 Readme for the latest information[1)]), single license for 2 installations Without SIMATIC PCS 7 Software Media Package	
• Goods delivery License key on USB flash drive and Certificate of License	6ES7652-3BA78-2YC0
• Online delivery License key download and online Certificate of License : Email address required!	6ES7652-3BA78-1YJ0

Selection and ordering data (continued)

SIMATIC PCS 7 OS Software ConversionPack 2x Server to Server Redundancy V10.0 For the conversion of two OS servers to OS server redundancy Supports all languages of the OS software server, software class A, runs with Windows Server 2019/2022 Standard Edition (see SIMATIC PCS 7 Readme for the latest information[1)]), single license for 2 installations Without SIMATIC PCS 7 Software Media Package	
• Goods delivery License key on USB flash drive and Certificate of License	6ES7652-3BA78-2YD0
• Online delivery License key download and online Certificate of License : Email address required!	6ES7652-3BA78-2YJ0
Single components	
Desktop adapter network adapter for BCE and as spare part for redundant terminal bus INTEL PCI network card for connection to Industrial Ethernet (10/100/1000 Mbps), with RJ45 connection and PCI express interface Note: License for the BCE communication with SIMATIC PCS 7 Industrial Workstations with BCE communication already included System IPCs with BCE communication included	A5E02639550
CP 1623 PCI Express x1 card for connection to Industrial Ethernet (10/100/1000 Mbps), with 2-port switch (RJ45)	6GK1162-3AA00
Licenses may be required for activating the functionality of the CP 1623 (Communication software is part of the SIMATIC PCS 7 software) ***Activation license if no redundant AS are used***	
SIMATIC NET HARDNET-IE S7 V18 Runtime software, 2 languages (German/English), software class A license for up to 4 Industrial Ethernet CPs, floating license for 1 user without SIMATIC PCS 7 Software Media Package	
• Goods delivery Software and electronic manual on DVD, license key USB flash drive	6GK1716-1CB18-0AA0
• Online delivery Software, manual and license key download : Email address required!	6GK1716-1CB18-0AK0
Activation licenses when using redundant AS Alternative license for SIMATIC NET HARDNET-IE S7:	

© Siemens AG 2024

Selection and ordering data (continued)

SIMATIC NET HARDNET-IE S7-REDCONNECT V18 Runtime software, 2 languages (English, German), software class A License for up to 4 Industrial Ethernet CPs, floating license for 1 user Without SIMATIC PCS 7 Software Media Package	
• Goods delivery Software and electronic manual on DVD, license key USB flash drive	**6GK1716-0HB18-0AA0**
• Online delivery Software, manual and license key download : Email address required!	**6GK1716-0HB18-0AK0**
Additive license for SIMATIC NET HARDNET-IE S7:	
SIMATIC NET HARDNET-IE S7-REDCONNECT PowerPack V18 Runtime software, 2 languages (English, German), software class A License for up to 4 Industrial Ethernet CPs, floating license for 1 user Without SIMATIC PCS 7 Software Media Package	
• Goods delivery License key USB flash drive	**6GK1716-0HB18-0AC0**
• Online delivery License key download : Email address required!	**6GK1716-0HB18-0AK1**
Components for connecting SIMATIC PCS 7 stations to a redundant terminal bus with PRP protocol	
SOFTNET-IE RNA V18 Software for connecting SIMATIC PCS 7 stations to PRP-enabled networks with integrated SNMP Runtime software, 2 languages (English, German), software class A, runs with Windows 10 Enterprise 2019 LTSC, Windows Server 2019 Standard Edition Floating license for 1 user Without SIMATIC PCS 7 Software Media Package	
• Goods delivery Software and electronic manual on DVD, license key USB flash drive	**6GK1711-1EW18-0AA0**
• Online delivery Software, manual and license key download : Email address required!	**6GK1711-1EW18-0AK0**

Selection and ordering data (continued)

Industrial Ethernet routers RUGGEDCOM RSG900	
• **RUGGEDCOM RSG907R** Industrial hardened fully-managed Ethernet switch with 7 ports and integrated HSR/PRP RedBox for use in harsh industrial environments. The product has 3x 1 Gbps SFP slots and 4x 100 Mbps multimode LC ports (max. 2 km). Operating temperature from -40 to +85 °C (without fan).	**6GK6490-7RB..-....**
• **RUGGEDCOM RSG909R** Industrial hardened fully-managed Ethernet switch with 9 ports and integrated HSR/PRP RedBox for use in harsh industrial environments. The product has 3x 1 Gbps SFP slots and 6x 10/100/1000 Mbps RJ45 Ethernet ports. Operating temperature from -40 to +85 °C (without fan).	**6GK6498-0RB..-....**
Accessories such as cable material, connection plugs and plug-in transceivers	See section Communication, Industrial Ethernet, System connection PCS 7 systems

1) See "Software Media and Logistics" section, under "System documentation"
2) Delivery only in exchange for OS Archive license, special distribution release required.

You can find more information on the Software Media Package in the section "Software Media and Logistics", under "PCS 7 Software Packages".

More information

Regional product variants

All SIMATIC PCS 7 software products are designed for international use, in other words there is only one product variant for worldwide use and this is offered in up to 5 languages: English, German, French, Italian and Spanish. However, the number of supported languages is not standard; it can vary from product to product.

In addition, a regional "ASIA" product variant will also be offered for the SIMATIC PCS 7 Software Media Package and specific SIMATIC PCS 7 software products of the "Engineering System" and "Operator System" system components. The ASIA products are bilingual: English and Chinese (simplified). They are explicitly identified in the name by the suffix "ASIA".

If a product listed in this catalog does not have the suffix "ASIA" in its name, it can always be used globally. However, the following restriction applies: If a regional ASIA product is offered, the counterpart for international use does not support the Asian languages (currently Chinese simplified) present in the ASIA product.

The products for international use, i.e. products without the suffix "ASIA", are not intended as the basis for Runtime systems with fonts in Asian languages.

The following special points must be observed as a result of the definition of separate products for installation software and licenses. The SIMATIC PCS 7 installation software is available in the form of two data storage medium packages:

- SIMATIC PCS 7 Software Media Package
- SIMATIC PCS 7 Software Media Package ASIA

The specific ASIA software licenses harmonize exclusively with the SIMATIC PCS 7 Software Media Package ASIA. SIMATIC PCS 7 software licenses for which there is no ASIA counterpart can be used with both SIMATIC PCS 7 Software Media Packages.

© Siemens AG 2024

Overview

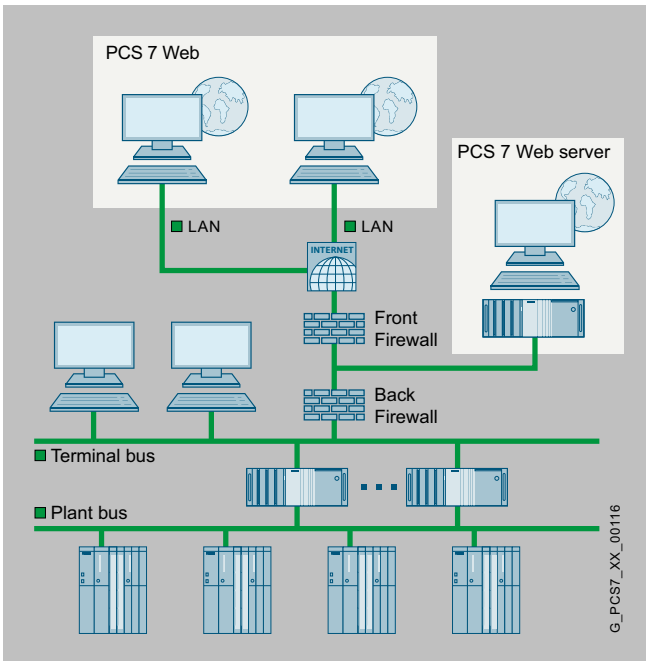

The PCS 7 Web Server makes available the project data of the OS servers for PCS 7 web clients and thus enables worldwide operator control and monitoring of a plant via intranet/internet.

It does this by accessing project-specific process data in the lower-level OS servers using the mechanisms of a multi-client. The integrated OS user management guarantees a high degree of security here.

Application

A differentiation is basically made between the following types of application when operating and monitoring SIMATIC PCS 7 systems via the Web:

- Standard:

  Up to 100 PCS 7 web clients access the data of a PCS 7 Web Server over intranet/internet.

- Diagnostics:

  One or only a few PCS 7 web clients have access to several PCS 7 web servers/single station systems for remote operation, diagnostics or monitoring.

Function

A plant can be operated and monitored via PCS 7 web clients in the same manner as via the OS clients.

The process pictures are displayed on the PCS 7 web clients with Internet Explorer. The PCS 7 web clients access the project data provided by the PCS 7 Web Server via an intranet or the internet.

If PCS 7 SIMATIC BATCH with the Batch OS Controls is also operated via web clients, additional licenses are required (SIMATIC BATCH OS Control Web Client). These licenses can be found in the section "Batch Automation".

© Siemens AG 2024

Selection and ordering data

"Standard" application	
SIMATIC PCS 7 Web Server Basic V10.0 6 languages (English, German, French, Italian, Spanish, Chinese), software class A, runs with Windows Server 2019/2022 Standard Edition (see SIMATIC PCS 7 Readme for the latest information[1]), single license for 1 installation Without SIMATIC PCS 7 Software Media Package	
• Goods delivery License key on USB flash drive, Certificate of License	6ES7658-2GX78-2YB0
• Online delivery License key download, online Certificate of License : Email address required!	6ES7658-2GX78-2YH0
SIMATIC PCS 7 Web Server License (cumulative) Language-neutral, software class A, single license for 1 installation Without SIMATIC PCS 7 Software Media Package	
• Goods delivery License key on USB flash drive, Certificate of License	
- 1 client	6ES7658-2GE00-0XB0
- 5 clients	6ES7658-2GF00-0XB0
- 10 clients	6ES7658-2GG00-0XB0
• Online delivery License key download, online Certificate of License : Email address required!	
- 1 client	6ES7658-2GE00-0XH0
- 5 clients	6ES7658-2GF00-0XH0
- 10 clients	6ES7658-2GG00-0XH0
"Diagnostics" application	
SIMATIC PCS 7 Web Diagnostics Server V10.0 6 languages (English, German, French, Italian, Spanish, Chinese), software class A, runs with Windows Server 2019/2022 Standard Edition (see SIMATIC PCS 7 Readme for the latest information[1]), single license for 1 installation Without SIMATIC PCS 7 Software Media Package	
• Goods delivery License key on USB flash drive, Certificate of License	6ES7658-2HX78-2YB0
• Online delivery License key download, online Certificate of License : Email address required!	6ES7658-2HX78-2YH0

Selection and ordering data (continued)

SIMATIC PCS 7 Web Diagnostics Client V10.0 6 languages (English, German, French, Italian, Spanish, Chinese), software class A, runs with Windows 10 Enterprise 2019/2022 LTSC (see SIMATIC PCS 7 Readme for the latest information[1]), single license for 1 installations Without SIMATIC PCS 7 Software Media Package	
• Goods delivery License key on USB flash drive, Certificate of License	6ES7658-2JX78-2YB0
• Online delivery License key download, online Certificate of License : Email address required!	6ES7658-2JX78-2YH0
Additive OS software Client license for the "Standard" and "Diagnostics" applications (required on the PCS 7 Web Server in addition to SIMATIC PCS 7 Web Server license or SIMATIC PCS 7 Web Diagnostics Server license)	
SIMATIC PCS 7 OS Software Client V10.0[2] 5 languages (English, German, French, Italian, Spanish), software class A, runs with Windows 10 Enterprise 2019/2021 LTSC (see SIMATIC PCS 7 Readme for the latest information[1]), floating license for 1 user Without SIMATIC PCS 7 Software Media Package	
• Goods delivery License key on USB flash drive, Certificate of License	6ES7658-2CX78-0YB5
• Online delivery License key download, online Certificate of License : Email address required!	6ES7658-2CX78-0YH5
SIMATIC PCS 7 OS Software Client ASIA V10.0[1] 2 languages (English, Chinese), software class A, runs with Windows 10 Enterprise 2019/2021 LTSC (see SIMATIC PCS 7 Readme for the latest information[1]), floating license for 1 user Without SIMATIC PCS 7 Software Media Package ASIA	
• Goods delivery ASIA license key on USB flash drive, Certificate of License	6ES7658-2CX78-0CB5

1) See "Software Media and Logistics" section, under "System documentation"
2) Deviating from the specification in the ordering data, the license of the OS software Client in these special applications is also enabled for the server operating system Windows Server 2019 Standard Edition.

More information

To ensure safe operation of the plant, you need to take suitable protective measures that also include IT security (e.g. network segmentation). For more information on the topic of Industrial Security, go to:
http://www.siemens.com/industrialsecurity

© Siemens AG 2024

Process data archiving and reporting

6

6/2	Introduction
6/3	Process Historian and Information Server

© Siemens AG 2024

Overview

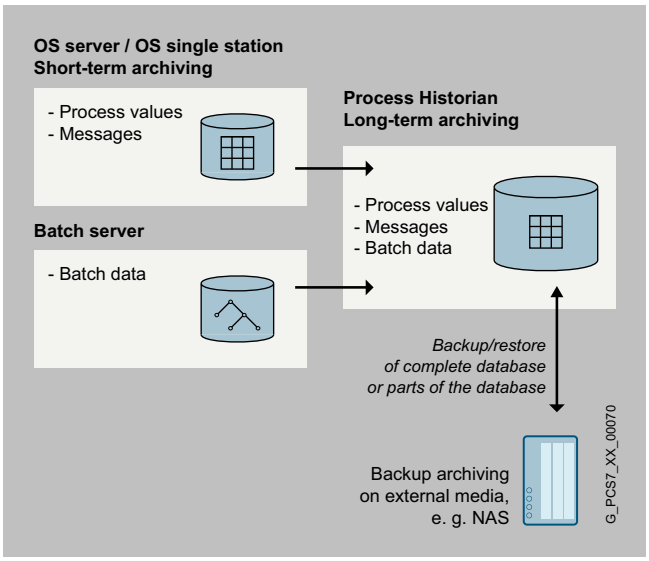

Short-term and long-term archiving

The Operator System already includes a high-performance archiving system based on Microsoft SQL Server with cyclic logs for short-term archiving of process values (typically 1 to 4 weeks) and messages (typically 2 months). Data from the cyclic logs and batch data from SIMATIC BATCH can be exported time-controlled or event-controlled to the Process Historian for permanent archiving.

The Process Historian can be expanded by an Information Server to work as a reporting system. The Information Server can optionally access the archived data in the Process Historian and in the operator stations in parallel.

Data managed in the Process Historian can be backed up on external storage media such as an NAS or an SAN. This requires additional hardware and software that the utilized operating system supports.

In addition, process values and messages from third-party sources can be read and archived if they have an OPC UA server. This data is read by the Process Historian OPC UA Data Collector during runtime and archived in the Process Historian database. They are subject to the same backup and recovery mechanisms as PCS 7 data. Here, too, the Information Server is used as a reporting system

Process operating actions as well as messages that are marked as relevant for Audit Trail are also archived separately as audit data.

Benefits

Process Historian

- Scalable high-performance archiving system in SIMATIC PCS 7
- No restriction with respect to single stations, servers or server pairs that can be archived
- May be combined with Information Server for the generation of reports

© Siemens AG 2024

Overview

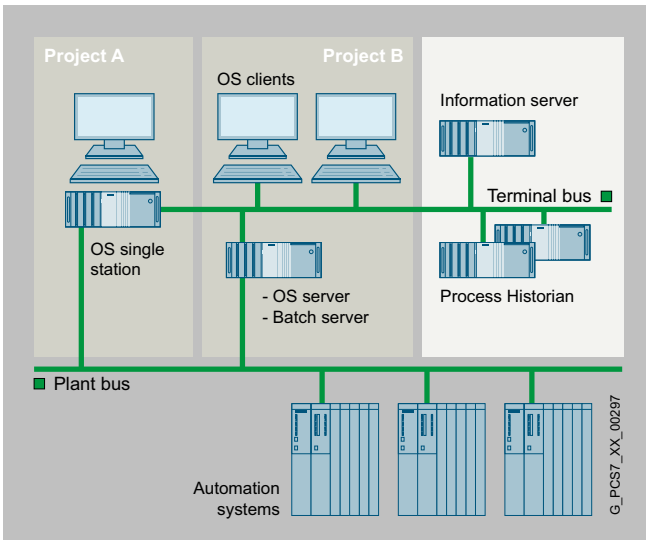

The Process Historian is used for long-term archiving of the following data from the SIMATIC PCS 7 process control system:

- OS archive data (process values and messages)
- Batch data

The process values and messages exported from the OS archives, as well as the batch data from SIMATIC BATCH are managed by the Process Historian in a central database. They can be visualized on OS clients or OS single stations either directly or with the support of the information server.

Design

Individual consultation on project-specific hardware configurations is recommended. The **PH-HW Advisor** tool is provided to determine the suitable hardware for the Process Historian:

https://support.industry.siemens.com/cs/us/en/view/109740115

The PH Trend Viewer tool, which is part of the product, is helpful during initial commissioning.

The Information Server can be installed and operated on the Process Historian hardware or on separate hardware.

Process Historian and Information Server run with the Windows Server 2019 and 2022 operating system; the Information Server can also run on separate hardware with Windows 10.

The Process Historian and Information Server do not need a connection to the plant bus. They can be connected to the OS and Batch Servers of the SIMATIC PCS 7 system via terminal bus, e.g. via the integrated network connection (Ethernet RJ45 port onboard) of the server.

Configuration of the Process Historian

The licenses contained in the SIMATIC PCS 7 Process Historian Basic Package or SIMATIC PCS 7 Process Historian and Information Server Basic Package products are required for configuration of the Process Historian as the long-term archive of a SIMATIC PCS 7 system. These licenses must always be stored on the Process Historian server. The SIMATIC PCS 7 Process Historian Archive BATCH software product for archiving batch data from SIMATIC BATCH can be ordered optionally.

Configuration of applicative couplings with the Process Historian

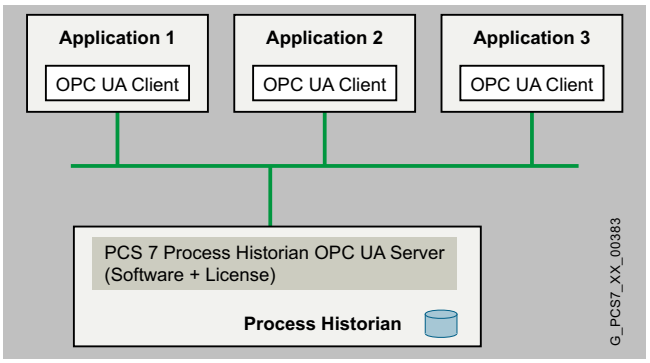

Reading of Process Historian data via OPC UA

As an OPC UA Client, any applications can read the process values and messages archived in the database of the Process Historian. A SIMATIC PCS 7 Process Historian OPC UA Server is required for this on the Process Historian (software from SIMATIC PCS 7 Software Media Package plus single license for one installation).

© Siemens AG 2024

Design (continued)

Configuration of the Information Server

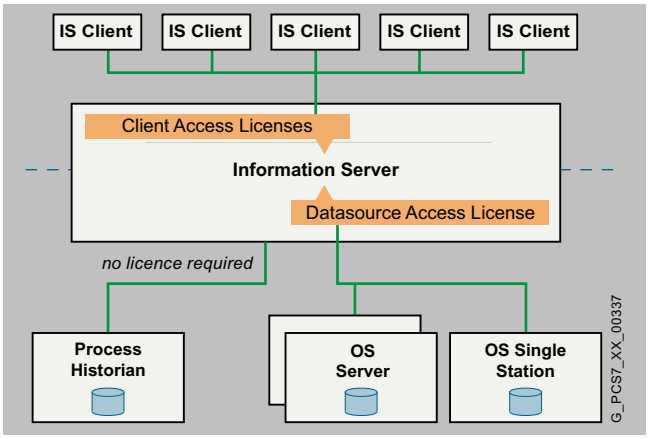

In addition to the SIMATIC PCS 7 Information Server Basic Package or the SIMATIC PCS 7 Process Historian and Information Server Basic Package, for configuration of the Information Server you require cumulative SIMATIC PCS 7 Information Server Client Access licenses corresponding to the number of clients that access the Information Server.

The Information Server is able to access one or multiple data sources in parallel. In addition to the Process Historian, this might also include archive data from operator stations (OS Single Station, OS Server). Unlike when you access the Process Historian, you need cumulative licenses for SIMATIC PCS 7 Information Server Data Source Access to read data from OS Single Stations and OS Servers. The license volume depends on the number of sources.

The installation of the SIMATIC PCS 7 Information Server Client Access and Data Source Access licenses is performed on the Information Server.

© Siemens AG 2024

Function

Process Historian

The Process Historian can archive process values, messages, and batch data from the SIMATIC PCS 7 process control system. It is configured in a SIMATIC PCS 7 project similar to other stations of the SIMATIC PCS 7 process control system (e.g. OS servers, Batch servers, Route Control servers, OpenPCS 7 servers or all clients).

The process values and alarms managed in the database of the Process Historian on the OS clients and OS single stations can be visualized in a clear and user-friendly manner. Data selection is supported by integrated filter functions. Messages and process values can be shown in table form, and process values also in graphic form. Tables of process values can be exported in CSV format for further processing in other Windows applications, e.g. Microsoft Excel.

Any application can access the archived process values and messages in the Process Historian via OPC UA.

The data managed by Process Historian can be transferred to external storage media (Backup/Restore). This requires additional hardware and software suitable for the operating system of the Process Historian, for example NAS.

The Process Historian also supports backup and restoring of the complete database – both manually and automatically.

Archiving and visualization functions

- Real-time archiving of process values and messages from SIMATIC PCS 7 Operator Systems (OS single stations and OS servers)
- Real-time archiving for the batch data of SIMATIC BATCH
- Real-time archiving of process values and messages from third-party systems via OPC UA
- Conversion of Runtime segments to archive segments:
  - Loss-free data compression
  - Reduction of segment size in accordance with assignment and release of unused storage space
- Support of multiple SIMATIC PCS 7 projects
- Scaling relative to the basic hardware used in terms of performance and configuration limits
- Export of all data as well as cataloging onto external storage media
- Reading the swapped-out data and cataloging from external storage media
- Bulk data export of process values and messages to text files
- Data visualization on the OS clients/OS single stations:
  - Configuration of views (picture windows and masks) including the selection criteria for displaying the data
  - Visualizing of messages in table form dependent on filter functions
  - Displaying of process values in table or graphic form dependent on filter functions
  - Visualization of a batch overview (selecting the detailed log of a batch from the batch overview is possible)

Information Server

The Information Server is the reporting system of the Process Historian. Based on the Microsoft Reporting Services, it offers web-based thin-client access to the historical data. An add-in for Microsoft Excel provides additional access to the database of the Process Historian.

© Siemens AG 2024

Function (continued)

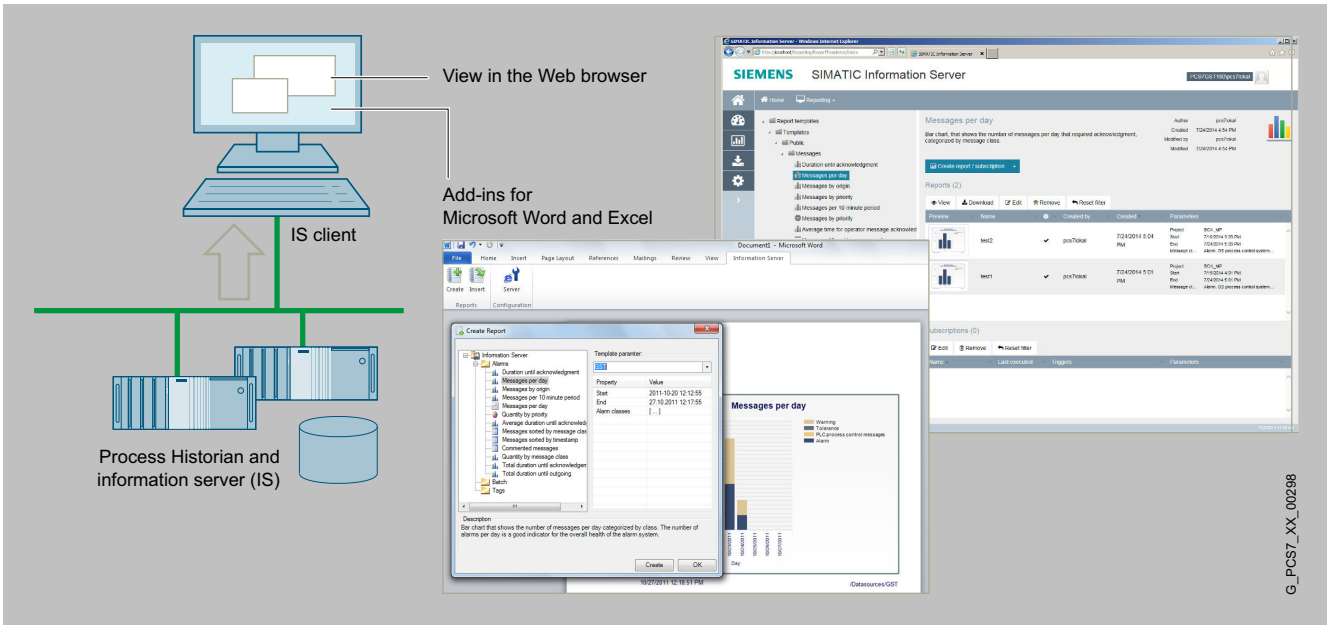

Reporting functions

- Frequently used report templates for process values, messages and batches
- Open reporting system for creating any number of new report templates
- Storage of configured (parameterized) report templates for faster access
- Report export in common document formats
- Support of subscriptions for cyclic report generation including email service
- Creation and storage of dashboards including interactive controls
- Creation of Microsoft Excel reports for historical process values and messages as well as storage of the Excel report templates on the Information Server
- Support of subscriptions for Microsoft Excel report templates

© Siemens AG 2024

Selection and ordering data

Process Historian and Information Server on shared hardware	
SIMATIC PCS 7 Process Historian and Information Server Basic Package V10.0 For the shared installation of Process Historian and Information Server on an Industrial Workstation 5 languages (English, German, French, Italian, Spanish), software class A, runs with Windows Server 2019/2022 Standard Edition (see SIMATIC PCS 7 V10.0 Readme for the latest information[1)]), single license for 1 installation Without SIMATIC PCS 7 Software Media Package	
• Goods delivery License key on USB flash drive, Certificate of License	6ES7652-7AX78-2YB0
• Online delivery License key download, online Certificate of License : Email address required!	6ES7652-7AX78-2YH0
SIMATIC PCS 7 Process Historian and Information Server Upgrade Package V10.0 For the shared installation of Process Historian and Information Server on an Industrial Workstation 5 languages (English, German, French, Italian, Spanish), software class A, runs with Windows Server 2019/2022 Standard Edition (see SIMATIC PCS 7 V10.0 Readme for the latest information[1)]), single license for 1 installation Without SIMATIC PCS 7 Software Media Package	
• Goods delivery License key on USB flash drive, Certificate of License	6ES7652-7AX78-2YE0
• Online delivery License key download, online Certificate of License : Email address required!	6ES7652-7AX78-2YK0
Process Historian on separate hardware	
SIMATIC PCS 7 Process Historian Basic Package V10.0 For installation of the Process Historian on a Server version of the Industrial Workstation, separate from the Information Server 5 languages (English, German, French, Italian, Spanish), software class A, runs with Windows Server 2019/2022 Standard Edition (see SIMATIC PCS 7 V10.0 Readme for the latest information[1)]), single license for 1 installation Without SIMATIC PCS 7 Software Media Package	
• Goods delivery License key on USB flash drive, Certificate of License	6ES7652-7BX78-2YB0
• Online delivery License key download, online Certificate of License : Email address required!	6ES7652-7BX78-2YH0

Selection and ordering data (continued)

SIMATIC PCS 7 Process Historian Server Redundancy V10.0 for redundant operation 5 languages (English, German, French, Italian, Spanish), software class A, runs with Windows Server 2019/2022 Standard Edition (see SIMATIC PCS 7 V10.0 Readme for the latest information[1)]), single license for 1 installation Without SIMATIC PCS 7 Software Media Package	
• Goods delivery License key on USB flash drive, Certificate of License	6ES7652-7CX78-2YB0
• Online delivery License key download, online Certificate of License : Email address required!	6ES7652-7CX78-2YH0
SIMATIC PCS 7 Process Historian OPC UA Data Collector V10.0 for third-party data archiving 5 languages (English, German, French, Italian, Spanish), software class A, runs with Windows Server 2019/2022 Standard Edition (see SIMATIC PCS 7 V10.0 Readme for the latest information[1)]), single license for 1 installation Without SIMATIC PCS 7 Software Media Package	
• Goods delivery License key on USB flash drive, Certificate of License	6ES7652-7GX78-2YB0
• Online delivery License key download, online Certificate of License : Email address required!	6ES7652-7GX78-2YH0
SIMATIC PCS 7 Process Historian Archive Tags (1000 Tags) for third-party data archiving 5 languages (English, German, French, Italian, Spanish), software class A, runs with Windows Server 2019/2022 Standard Edition (see SIMATIC PCS 7 V10.0 Readme for the latest information[1)]), single license for 1 installation Without SIMATIC PCS 7 Software Media Package	
• Goods delivery License key on USB flash drive, Certificate of License	6ES7652-7HA00-2YB0
• Online delivery License key download, online Certificate of License : Email address required!	6ES7652-7HA00-2YH0

© Siemens AG 2024

Selection and ordering data (continued)

SIMATIC PCS 7 Information Server Upgrade Package V10.0 For installation of the Process Historian on a Server version of the Industrial Workstation, separate from the Information Server 5 languages (English, German, French, Italian, Spanish), software class A, runs with Windows Server 2019/2022 Standard Edition (see SIMATIC PCS 7 V10.0 Readme for the latest information[1]), single license for 1 installation Without SIMATIC PCS 7 Software Media Package	
• Goods delivery License key on USB flash drive, Certificate of License	6ES7652-7BX78-2YE0
• Online delivery License key download, online Certificate of License : Email address required!	6ES7652-7BX78-2YK0
Functional options for Process Historian	
SIMATIC PCS 7 Process Historian Archive BATCH V10.0 5 languages (English, German, French, Italian, Spanish), software class A, runs with Windows Server 2019/2022 Standard Edition (see SIMATIC PCS 7 V10.0 Readme for the latest information[1]), single license for 1 installation Without SIMATIC PCS 7 Software Media Package	
• Goods delivery License key on USB flash drive, Certificate of License	6ES7652-7DX78-2YB0
• Online delivery License key download, online Certificate of License : Email address required!	6ES7652-7DX78-2YH0
SIMATIC PCS 7 Process Historian OPC UA Server V10.0 For connection to third-party system 5 languages (English, German, French, Italian, Spanish), software class A, runs with Windows Server 2019/2022 Standard Edition (see SIMATIC PCS 7 V10.0 Readme for the latest information[1]), single license for 1 installation Without SIMATIC PCS 7 Software Media Package	
• Goods delivery License key on USB flash drive, Certificate of License	6ES7652-7FX78-2YB0
• Online delivery License key download, online Certificate of License : Email address required!	6ES7652-7FX78-2YH0

Selection and ordering data (continued)

SIMATIC PCS 7 Process Historian Archive AUDIT V10.0 5 languages (English, German, French, Italian, Spanish), software class A, runs with Windows Server 2019/2022 Standard Edition (see SIMATIC PCS 7 V10.0 Readme for the latest information[1]), single license for 1 installation Without SIMATIC PCS 7 Software Media Package	
• Goods delivery License key on USB flash drive, Certificate of License	6ES7652-7JX78-2YB0
• Online delivery License key download, online Certificate of License : Email address required!	6ES7652-7JX78-2YH0
Information Server on separate hardware	
SIMATIC PCS 7 Information Server Basic Package V10.0 For installation of the Information Server on a single station or server version of the Industrial Workstation, separate from the Process Historian 5 languages (English, German, French, Italian, Spanish), software class A, runs with Windows 10 Enterprise 2019/2021 LTSC and Windows Server 2019/2022 Standard Edition (see SIMATIC PCS 7 Readme for the latest information10.0[1]), single license for 1 installation Without SIMATIC PCS 7 Software Media Package	
• Goods delivery License key on USB flash drive, Certificate of License	6ES7652-7EX78-2YB0
• Online delivery License key download, online Certificate of License : Email address required!	6ES7652-7EX78-2YH0

Quantity options for Information Server	
SIMATIC PCS 7 Information Server Client Access Cumulative Client Access licenses, independent of language, software class A, single license for 1 installation Without SIMATIC PCS 7 Software Media Package	
• Goods delivery License key on USB flash drive, Certificate of License	
- 1 client	6ES7652-7YA00-2YB0
- 3 clients	6ES7652-7YB00-2YB0
• Online delivery License key download, online Certificate of License : Email address required!	
- 1 client	6ES7652-7YA00-2YH0
- 3 clients	6ES7652-7YB00-2YH0

© Siemens AG 2024

Selection and ordering data (continued)

SIMATIC PCS 7 Information Server Data Source Access License for direct access to the archive data of operator stations (sources) Cumulative source licenses, independent of language, software class A, single license for 1 installation Without SIMATIC PCS 7 Software Media Package	
• Goods delivery License key on USB flash drive, Certificate of License	
- 1 source	**6ES7652-7YE00-2YB0**
- 3 sources	**6ES7652-7YF00-2YB0**
• Online delivery License key download, online Certificate of License : Email address required!	
- 1 source	**6ES7652-7YE00-2YH0**
- 3 sources	**6ES7652-7YF00-2YH0**

1) See "Software Media and Logistics" section, under "System documentation"

© Siemens AG 2024

Plant device management

7

7/2	SIMATIC PDM
7/14	SIMATIC PCS 7 Maintenance Station
7/19	SIMATIC PDM Maintenance Station

© Siemens AG 2024

Overview

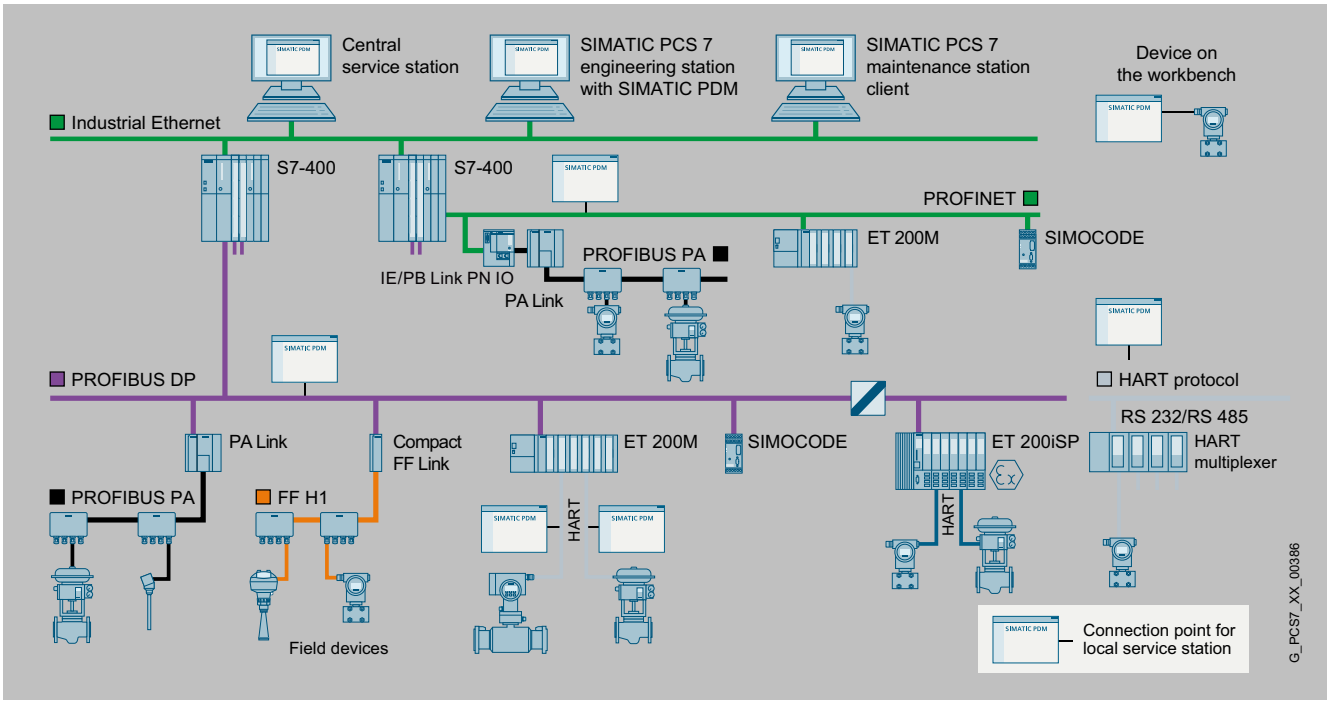

Configuration options with SIMATIC PDM

SIMATIC PDM (Process Device Manager) is a universal, vendor-independent tool for the configuration, parameter assignment, commissioning, diagnostics and servicing of intelligent field devices (sensors and actuators) and field components (remote I/Os, multiplexers, control room devices, compact controllers, compact modules), which in the following sections will be referred to simply as devices.

With *one* software product, SIMATIC PDM enables users to work with over 4 500 devices and device variants of Siemens and over 200 other manufacturers worldwide on a *single* homogeneous user interface.

The user interface satisfies the requirements of the VDI/VDE GMA 2187 and IEC 65/349/CD directives. Parameters and functions for all supported devices are displayed in a consistent and uniform fashion independent of their communications interface. Even complex devices with several hundred parameters can be represented clearly and processed quickly. Using SIMATIC PDM it is very easy to navigate in highly complex stations such as remote I/Os and even connected field devices.

From the viewpoint of device integration, SIMATIC PDM is the most powerful open process device manager on the global market. Devices not previously supported can be integrated in SIMATIC PDM by importing their device description packages (either EDD or FDI). This provides security for your investment and saves you investment costs, training expenses and follow-up costs.

SIMATIC PDM supports the operative system management in particular through:

- Uniform representation and operation of devices
- Uniform representation of diagnostics information
- Indicators for preventive maintenance and servicing
- Detection of changes in the project and device
- Increasing the operational reliability
- Reducing the investment, operating and maintenance costs
- Quantity options for
  - Transfer of parameters between devices
  - Transfer of parameter sets to the devices
  - Export and import functions
  - Diagnostics update

SIMATIC PDM can be used extremely flexibly and tailored to a specific task for field device service:

- Single-point station for point-to-point connection to field devices
- Local service and parameter assignment station with connection to fieldbus segments
- Central service and parameter assignment station with connection to plant bus
- Central HART service and parameter assignment station for HART multiplexers and WirelessHART field devices
- Integrated into the stand-alone SIMATIC PDM Maintenance Station
- Integrated into the SIMATIC PCS 7 process control system

Maintenance personnel can assign field device parameters at mobile and stationary workstations with SIMATIC PDM. Practically every workstation integrated in the production plant can be used for configuration. Service personnel are thus able to work directly at the location of the field device, while data is stored centrally in the engineering station or maintenance station. This leads to a significant shortening of maintenance and travel times. Additional device-independent system functions support higher-level maintenance stations for creating progress lists for work and servicing.

When a maintenance station is configured in the SIMATIC PCS 7 process control system, SIMATIC PDM is integrated into it and trans-

© Siemens AG 2024

Overview (continued)

mits parameter data, diagnostic information and processing information. You can switch directly to the SIMATIC PDM views from the diagnostics faceplates in the maintenance station to perform diagnostics and work on the device in more detail.

A SIMATIC PDM user administration system based on SIMATIC Logon is used to assign various roles with defined function privileges to users. These function privileges refer to SIMATIC PDM system functions, e.g. writing to the device.

For all devices integrated with device description packages, SIMATIC PDM provides a range of information for display and further processing on the maintenance station, for example:

- Device type information (electronic rating plate)
- Detailed diagnostics information (manufacturer information, information on error diagnostics and troubleshooting, further documentation)
- Results of internal condition monitoring functions
- Status information (for example local configuration changes), device test completed
- Information on changes (Audit Trail report)
- Parameter information

© Siemens AG 2024

Design

Components	Product packages SIMATIC PDM Stand alone				SIMATIC PDM System-integrated in the configuration environment		
	Minimum configuration	Basic configuration	Service and parameter assignment station				
			local	central	SIMATIC S7	SIMATIC PCS 7	
	PDM Single Point	PDM Basic	PDM Service	PDM Stand alone Server	PDM S7	PDM PCS 7	PDM PCS 7 Server
SIMATIC PDM TAGs[1] in scope of supply	1	4	4 + 50	4 + 100	4 + 100	4 + 100	4 + 100
SIMATIC PDM expansion options							
Count Relevant Licenses (accumulative) - 10 TAGs - 100 TAGs - 1 000 TAGs	*Cannot be expanded*	o	o	o	o	o	o
SIMATIC PDM Basic		●	●	●	●	●	●
SIMATIC PDM Extended		o	o	●	●	●	●
SIMATIC PDM integration in STEP 7/PCS 7		o	o	o	●	●	●
SIMATIC PDM Routing[2]		o	o	o	o	●	●
SIMATIC PDM Server		o	o	●	o	o	o
SIMATIC PDM 1 Client[3]		o	o	● (2 ×)	o	o	o
SIMATIC PDM HART Server		o	o	o	o	–	–

SIMATIC PDM product structure
● Product component is part of the product package
o Optional product component for the product package; order additive
– Product component is not relevant for the product package or not available
1) For TAG definition, see Design section under "SIMATIC PDM TAGs"
2) Can only be operated in STEP 7/PCS 7 in combination with the SIMATIC PDM Integration option package
3) Can only be used in combination with the SIMATIC PDM Server option package

Customer-oriented product structure

The customer-oriented product structure of SIMATIC PDM provides optimal support for the named main use cases and enables you to adapt the scope of functions and performance to your individual requirements. The product range is organized as follows:

SIMATIC PDM Stand alone product packages

- SIMATIC PDM Single Point, a minimum configuration for single device handling
- SIMATIC PDM Basic for local service and parameter assignment stations as well as basic configuration for individual product package with optional product components
- SIMATIC PDM Service for local service and parameter assignment stations
- SIMATIC PDM Stand alone Server for central service and parameter assignment stations, e.g. for various plant units

SIMATIC PDM system-integrated product packages

- SIMATIC PDM S7 for local SIMATIC S7 engineering and service stations
- Various configurations for central SIMATIC PCS 7 engineering and service stations:
  - SIMATIC PDM PCS 7
  - SIMATIC PDM PCS 7 Server (enables device parameter assignment and diagnostics on clients of the PCS 7 engineering station and PCS 7 Maintenance Station)

In some circumstances, the product packages can be expanded with optional product components (for details, see the Design section).

Product range	SIMATIC PDM V9.3 Single Point	Basic	Service	Stand alone Server	S7	PCS 7	PCS 7 Server
TAGs contained	**1**	**4**	**4 + 50**	**4 + 100**	**4 + 100**	**4 + 100**	**4 + 100**
Project: Create offline	●	●	●	●	●	●	●
Project: Usable TAG extensions	–	●	●	●	●	●	●
Project: Process device network view	●	●	●	●	●	●	●
Project: Process device plant view	●	●	●	●	●	●	●
Project: Export/import devices	●	o	o	●	●	●	●
Project: Export/import parameters	●	o	o	●	●	●	●
Project: HW Config	–	o	o	o	●	●	●
Project: Utilization of SIMATIC PDM options	–	●	●	●	●	●	●
Project: Integration in STEP 7/PCS 7	–	o	o	o	●	●	●
Group operations	–	o	o	●	o	●	●
Setting device IDs	–	o	o	●	o	●	●
Communication: HART modem	●	●	●	●	●	–	–
Communication: HART interface	●	●	●	●	●	–	–
Communication: PROFIBUS DP/PA	●	●	●	●	●	●	●

© Siemens AG 2024

Design (continued)

Product range	SIMATIC PDM V9.3 Single Point	Basic	Service	Stand alone Server	S7	PCS 7	PCS 7 Server
Communication: HART over PROFIBUS DP	●	●	●	●	●	●	●
Communication: FF H1	–	–	–	–	o	o	o
Communication: Modbus	●	●	●	●	●	●	●
Communication: Ethernet	●	●	●	●	●	●	●
Communication: PROFINET	●	●	●	●	●	●	●
Communication: HART over PROFINET	●	●	●	●	●	●	●
Devices: Export/import parameters	–	o	o	●	●	●	●
Devices: Comparison of parameter values	–	o	o	●	●	●	●
Devices: Saving parameters	●	●	●	●	●	●	●
Devices: Change log (Audit Trail)	–	o	o	●	●	●	●
Devices: Calibration report	–	o	o	●	●	●	●
Devices: Print function	●	o	o	●	●	●	●
Devices: Document manager	–	o	o	●	●	●	●
Lifelist: Basic functionality	●	●	●	●	●	●	●
Lifelist: Expanded functionality (scan range, diagnostics, export, addressing)	–	o	o	●	●	●	●
Communication: Data record routing	–	o	o	o	o	●	●
Communication: HART multiplexer	–	o	o	o	o	–	–
Communication: WirelessHART	–	o	o	o	o	–	–
Function: Device parameterization on PCS 7 Maintenance Station Clients	–	o	o	o	o	o	●
Function: Device parameterization on SIMATIC PDM Clients	–	o	o	● (2 ×)	o	o	o

SIMATIC PDM overview of functions and features
● Product component is part of the product package
o Optional product component for the product package; order additive
– Product component is not relevant for the product package or not available

SIMATIC PDM Stand alone product packages

SIMATIC PDM Single Point V9.3

This minimum configuration with handheld functionality is intended for handling exactly *one* field device via point-to-point coupling. It cannot be expanded with functions or with SIMATIC PDM TAG or SIMATIC PDM 1 Client licenses. Upgrading to a different product variant, e.g. SIMATIC PDM Basic, or a different product version is also not possible.

Supported communication types:

- PROFIBUS DP/PA
- HART communication (modem, RS 232 and via PROFIBUS/PROFINET)
- Modbus
- Ethernet
- PROFINET

The functionality is matched accordingly. The device functions are supported as defined in the device description, for example:

- Managing the device description library and unlimited device selection
- Parameter assignment and diagnostics according to the device description
- Exporting and importing of parameter data
- Device identification
- LifeList
- Printing the parameter list

SIMATIC PDM Basic V9.3

SIMATIC PDM Basic is for local service and parameter assignment stations on any computers (IPC/notebook) with local connection to bus segments or direct connection to the device.

Supported communication types:

- PROFIBUS DP/PA
- HART communication (modem, RS 232 and via PROFIBUS/PROFINET)
- Modbus
- Ethernet
- PROFINET

SIMATIC PDM Basic is equipped with all basic functions required for operation and parameter assignment of devices. That is, compared to SIMATIC PDM Single Point, it has the following additional functions:

- Managing the device description library and unlimited device selection
- Parameter assignment and diagnostics according to the device description
- Exporting and importing of parameter data
- Device identification
- LifeList
- Memory function
- Communication with HART field devices via remote I/Os

© Siemens AG 2024

Design (continued)

- Communication via station objects (routing)

As a basic block for an individual configuration, SIMATIC PDM Basic can be expanded with all functional SIMATIC PDM options (PDM Routing only required in combination with PDM Integration in STEP 7/PCS 7) as well as with cumulative sets of 10, 100 or 1 000 SIMATIC PDM TAGs. Without TAG expansion, SIMATIC PDM Basic is suitable for projects with up to 4 TAGs. SIMATIC PDM 1 Client licenses (sets of 1) can also be added in combination with the SIMATIC PDM Server option.

The SIMATIC PDM Extended option allows the activation of additional SIMATIC PDM system functions:

- Change log
- Calibration report
- Extended information in the LifeList (diagnostics)
- Exporting and importing functions
- Print functions
- Document manager
- Comparison function
- Set operations
- Parameter transfer function

(For details, see Optional product components, SIMATIC PDM Extended V9.3).

SIMATIC PDM Service V9.3

With this product package for extended service, local service and parameter assignment stations can be realized on any type of computer (IPC/notebook) with a local connection to a bus segment or direct connection to field devices.

It comprises:

- SIMATIC PDM Basic (incl. 4 SIMATIC PDM TAGs)
- 50 SIMATIC PDM TAGs

Like SIMATIC PDM Basic, SIMATIC PDM Service can be expanded with all functional SIMATIC PDM options (PDM Routing only in combination with PDM Integration in STEP 7/PCS 7 required) as well as with cumulative SIMATIC PDM TAGs (sets of 10, 100 or 1 000) (see "Optional product components"). SIMATIC PDM 1 Client licenses (sets of 1) can also be added in combination with the SIMATIC PDM Server option. It is permitted to upgrade to another product version.

Note: For use of gateways and for PROFINET or Ethernet communication with field devices, SIMATIC PDM TAG licenses are charged for according to the objects configured in the process device plant view as follows:

- 10 SIMATIC PDM TAGs per S7 DSGW (data record gateway) with one PROFIBUS subnet
- 20 SIMATIC PDM TAGs per S7 DSGW with more than one PROFIBUS subnet
- 10 TAGs per IE/PB Link
- 1 TAG per field device (except in the case of special specifications)

SIMATIC PDM Stand alone Server V9.3

With the SIMATIC PDM Stand alone Server product package, you can establish central service and parameter assignment stations that operate according to the client/server principle. Portals opened on licensed SIMATIC PDM Clients (SIMATIC PDM sessions) enable handling of production plant field devices via the SIMATIC PDM Server on the plant bus assigned via registration. The product package can be used multiple times within a plant, e.g. for various plant units. It comprises:

- SIMATIC PDM Basic (incl. 4 SIMATIC PDM TAGs)
- SIMATIC PDM Extended
- SIMATIC PDM Server
- 2 × SIMATIC PDM 1 Client
- 100 SIMATIC PDM TAGs

SIMATIC PDM Stand alone Server can be expanded with all functional SIMATIC PDM options (PDM Routing only in combination with PDM Integration in STEP 7/PCS 7 required) as well as with cumulative sets of 10, 100 or 1 000 SIMATIC PDM TAGs and 1 SIMATIC PDM 1 Client licenses (see "Optional product components"). The portals opened on these clients (SIMATIC PDM sessions) must also be licensed with the SIMATIC PDM 1 Client Licenses besides the SIMATIC PDM Clients. For details about this, refer to "SIMATIC PDM 1 Client" under "Optional product components". For user management of the SIMATIC PDM Clients, the SIMATIC Logon product is also required. It is possible to upgrade to another product version.

Note: For use of gateways and for PROFINET or Ethernet communication with field devices, SIMATIC PDM TAG licenses are charged according to the objects configured in the process device plant view (for details, see corresponding note under SIMATIC PDM Service V9.3).

SIMATIC PDM system-integrated product packages

SIMATIC PDM S7 V9.3

The SIMATIC PDM S7 product package designed for use in a SIMATIC S7 configuration environment is intended for setup of a local SIMATIC S7 engineering and service station. It requires the installation of STEP 7 V5.5+SP4. It includes:

- SIMATIC PDM Basic (incl. 4 SIMATIC PDM TAGs)
- SIMATIC PDM Extended
- SIMATIC PDM integration in STEP 7/PCS 7
- 100 SIMATIC PDM TAGs

SIMATIC PDM S7 can be expanded with the functional options SIMATIC PDM Routing, SIMATIC PDM Server, and SIMATIC PDM HART Server as well as with cumulative SIMATIC PDM TAGs (sets of 10, 100 or 1 000) (see "Optional product components"). SIMATIC PDM 1 Client licenses (sets of 1) can also be added in combination with the SIMATIC PDM Server option.

SIMATIC PDM PCS 7 V9.3

The SIMATIC PDM PCS 7 product package suitable for use in a SIMATIC PCS 7 configuration environment is intended for use in a central SIMATIC PCS 7 engineering and service station. It comprises:

- SIMATIC PDM Basic (incl. 4 SIMATIC PDM TAGs)
- SIMATIC PDM Extended
- SIMATIC PDM integration in STEP 7/PCS 7
- SIMATIC PDM Routing
- 100 SIMATIC PDM TAGs

SIMATIC PDM PCS 7 can be expanded with the functional options SIMATIC PDM Communication FOUNDATION Fieldbus and SIMATIC PDM Server as well as with cumulative SIMATIC PDM TAGs (sets of 10, 100 or 1000) (see "Optional product components"). SIMATIC PDM 1 Client licenses (sets of 1) can also be added in combination with the SIMATIC PDM Server option.

SIMATIC PDM PCS 7 Server V9.3

Instead of SIMATIC PDM PCS 7, the SIMATIC PDM PCS 7 Server product package expanded with the SIMATIC PDM Server option can also be used for a central SIMATIC PCS 7 engineering and ser-

© Siemens AG 2024

Design (continued)

vice station. Field devices integrated using an Electronic Device Description (EDD) can then be assigned parameters on any client of the SIMATIC PCS 7 Maintenance Station as well as on local SIMATIC PDM Clients. The following are components of SIMATIC PDM PCS 7 Server:

- SIMATIC PDM Basic (incl. 4 SIMATIC PDM TAGs)
- SIMATIC PDM Extended
- SIMATIC PDM integration in STEP 7/PCS 7
- SIMATIC PDM Routing
- SIMATIC PDM Server
- 100 SIMATIC PDM TAGs

SIMATIC PDM PCS 7 Server can be expanded with cumulative sets of 10, 100 or 1 000 SIMATIC PDM TAGs and 1 SIMATIC PDM 1 Client licenses (see "Optional product components"). The portals opened on these clients (SIMATIC PDM sessions) must also be licensed with the SIMATIC PDM 1 Client Licenses besides the SIMATIC PDM Clients. For details about this, refer to "SIMATIC PDM 1 Client" under "Optional product components".

Optional product components

SIMATIC PDM Extended V9.3 option

The SIMATIC PDM Extended option enables you to unlock other system functions for SIMATIC PDM Basic and SIMATIC PDM, for example:

- Change log
- Calibration report
- Extended information in the Lifelist
- Export and import functions
- Print functions
- Document manager
- Comparison function
- Group operations
- Setting device IDs

This functionality is already integrated in the following product packages: SIMATIC PDM Stand alone Server, SIMATIC PDM S7, SIMATIC PDM PCS 7, SIMATIC PDM PCS 7 Server and SIMATIC PDM PCS 7-FF.

SIMATIC PDM Integration option in STEP 7/PCS 7 V9.3

This option is used for the integration of SIMATIC PDM in a SIMATIC S7 or SIMATIC PCS 7 configuration environment. SIMATIC PDM can then be started directly from the hardware configurator (HW Config) in STEP 7/SIMATIC PCS 7.

This functionality is already integrated in the product packages of category "SIMATIC PDM system-integrated" (SIMATIC PDM S7, SIMATIC PDM PCS 7, SIMATIC PDM PCS 7 Server).

SIMATIC PDM Routing V9.3 option

If SIMATIC PDM is used on an engineering station, the SIMATIC PDM Routing option enables handling of every device in the field that can be configured per EDD throughout the plant and across different bus systems and remote I/Os. SIMATIC PDM Routing can be used in combination with SIMATIC PDM Integration in STEP 7/SIMATIC PCS 7.

Routing is already integrated in SIMATIC PDM PCS 7, SIMATIC PDM PCS 7 Server. SIMATIC PDM Routing can be additionally installed as an option on a local SIMATIC S7 engineering and service station with SIMATIC PDM S7.

SIMATIC PDM Server V9.3 option

The server functionality can be activated in a local or central service station with this option. It enables parameter assignment of selected field devices on any client of the SIMATIC PCS 7 Maintenance Station as well as on local SIMATIC PDM Clients. This functionality is already integrated in the SIMATIC PDM Stand alone Server and SIMATIC PDM PCS 7 Server. The SIMATIC PDM Clients as well as the portals opened on these clients (SIMATIC PDM sessions) must be licensed with SIMATIC PDM 1 Client licenses. For details about this, refer to "SIMATIC PDM 1 Client" under "Optional product components".

SIMATIC PDM HART Server V9.3 option

This option permits the use of HART multiplexers from various vendors in SIMATIC PDM. Furthermore, WirelessHART field devices can also be parameterized with SIMATIC PDM.

SIMATIC PDM Command Interface V9.3 option

With this option, SIMATIC PDM configurations for stand-alone operation (based on the SIMATIC PDM Basic or SIMATIC PDM Service product package) can be remote-controlled with regard to configuration and field device operation.

Note: You cannot order the SIMATIC PDM Command Interface option. It is only intended for project-specific use and not for mass use. Programming knowledge is necessary.

SIMATIC PDM TAGs (version-independent)

Depending on the project size, the SIMATIC PDM TAGs supplied with a product package (except SIMATIC PDM Single Point) can be cumulatively expanded with sets of 10, 100 or 1 000 SIMATIC PDM TAGs.

A SIMATIC PDM TAG corresponds to a SIMATIC PDM object that represents the individual field devices or field components within a project, e.g. measuring instruments, positioners, switching devices or remote I/Os. SIMATIC PDM TAGs are also relevant for diagnostics with the lifelist of SIMATIC PDM. In this case, TAGs are considered to be all recognized devices with diagnostics capability, whose detailed diagnostics is effected through the device description (EDD).

SIMATIC PDM 1 Client (version-independent)

SIMATIC PDM 1 Client is a cumulative 1 Client license for SIMATIC PDM configurations with SIMATIC PDM Server, for example SIMATIC PDM Stand alone Server or SIMATIC PDM PCS 7 Server. The license is used to activate registered SIMATIC PDM Clients and SIMATIC PDM Sessions (opened portals) on these clients.

Each "SIMATIC PDM 1 Client" license activates one SIMATIC PDM Client with one SIMATIC PDM session. A SIMATIC PDM session is defined as one opened portal together with the parameter views of the field devices opened from the portal. Each additional simultaneously opened SIMATIC PDM session on this client requires its own "SIMATIC PDM 1 Client" license. For larger projects, up to 30 registered SIMATIC PDM Clients are possible.

The "SIMATIC PDM 1 Client" license must be transferred to the computer with the SIMATIC PDM Server. The SIMATIC PDM Stand alone Server product package comes with 2 "SIMATIC PDM 1 Client" licenses.

SIMATIC PDM Software Media Package V9.3

The current SIMATIC PDM installation software is offered without a license in the form of the SIMATIC PDM Software Media Package. Purchasing of corresponding software licenses is necessary to unlock the product-specific functionalities.

With SIMATIC PDM product packages, a SIMATIC PDM Software Media Package is supplied together with each ordering item when supplied via "goods delivery" (not with optional product components). Further SIMATIC PDM Software Media Packages must be ordered separately as required.

© Siemens AG 2024

Design (continued)

The software of the SIMATIC PDM Media Package without a license can be used for demonstration purposes in demo mode. The SIMATIC PDM functionality is limited as follows in demo mode:

- Stand alone mode
- Storage functions disabled
- Export and import functions disabled
- Expanded functionality disabled
- Communication functions restricted

Information on ordering and delivery

Installation software for the SIMATIC PDM is provided in the form of a software media package. Software media packages and product-specific software licenses are separate packages, which are not merged into a single delivery unit for a goods delivery.

The number of delivered software media packages can be determined by the number of ordered items. You can find more information under "Goods delivery" in the section "Software Media and Logistics", subsection "PCS 7 Software Packages" in the ST PCS 7 catalog.

© Siemens AG 2024

Function

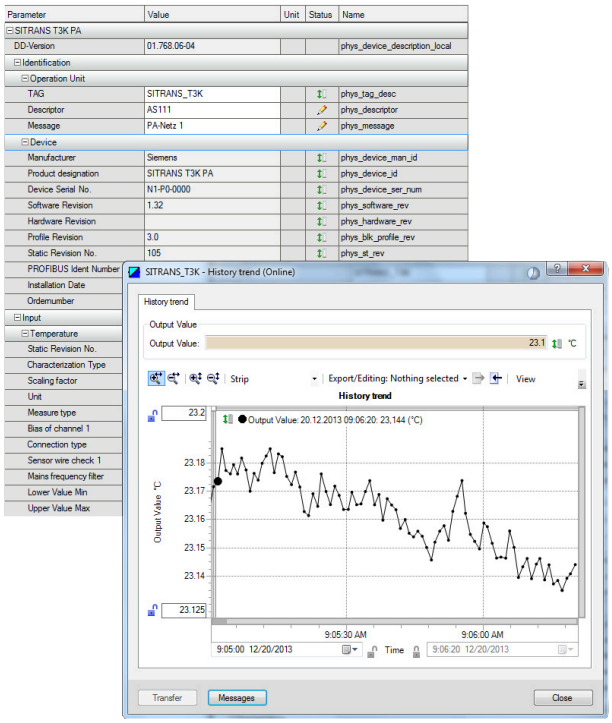

SIMATIC PDM, parameter view and trend window

SIMATIC PDM core functions

- Creation of project-specific device libraries
- Adjustment and modification of device parameters
- Comparing (e.g. project and device data)
- Plausibility testing of data input
- Device identification and testing
- Device status indication (operating modes, interrupts, states)
- Simulation
- Diagnostics (standard, detailed)
- Export/import (parameter data, logs, documents)
- Management (e.g. networks and PCs)
- Commissioning functions, e.g. measuring circuit tests of device data
- Lifecycle management functions, e.g. for device replacement
- Global and device-specific modification logbook for user operations (audit trail)
- Device-specific calibration reports
- Graphic presentations of echo envelope curves, trend displays, valve diagnosis results etc.
- Presentation of incorporated manuals
- Document manager for integration of up to 10 multimedia files

Integration

Device integration

SIMATIC PDM supports all devices defined by the Electronic Device Description (EDD) and devices described by Field Device Integration Technology (FDI Technology V1.2). EDD is standardized to EN 50391 and IEC 61804. Internationally it is the most widely used standardized technology for device integration. At the same time, it is the guideline of the established organizations for

- PROFIBUS and PROFINET (PI – PROFIBUS & PROFINET International)
- HART (FCG: Field Communication Group)
- Foundation Fieldbus (FCG: Field Communication Group)

The devices are integrated directly in SIMATIC PDM through a company-specific EDD or through the libraries of the FCG. To achieve improved transparency, they can be managed in project-specific device libraries.

Field devices are described in the EDD or FDI device description packages in terms of functionality and construction using the Electronic Device Description Language (EDDL). Using this description, SIMATIC PDM automatically creates its user interfaces with the specific device data. By simply importing the manufacturer's device-specific device description packages, you can update existing devices and integrate further devices in SIMATIC PDM.

Technical support

If you wish to use devices which cannot be found in the SIMATIC PDM device description library, we would be pleased to help you integrate them.

Support Request

You can request support by service specialists at Technical Support by using a "Support Request" on the internet:

Contacts in the Region

The Technical Support responsible for your Region can be found on the internet at:

© Siemens AG 2024

Selection and ordering data

SIMATIC PDM Stand alone product packages	
Minimum configuration	
SIMATIC PDM Single Point V9.3 including 1 TAG; product package for operation and configuration of one field device; communication via PROFIBUS DP/PA, HART (modem, RS 232, PROFIBUS/PROFINET), Modbus, Ethernet or PROFINET Additional functions or SIMATIC PDM TAGs are not possible 6 languages (English, German, French, Italian, Spanish, Chinese), software class A, runs with Windows 10 Enterprise 2019/2021 LTSC and Windows Server 2019/2022 Standard Edition, for operation within the SIMATIC PCS 7 product family, the specifications there take precedence (see SIMATIC PDM V9.3 Readme for the latest information), floating license for 1 user Without SIMATIC PCS 7 Software Media Package	
• Goods delivery License key on USB flash drive and Certificate of License, bundled with 1 × SIMATIC PDM Software Media Package per order item	6ES7658-3HA88-0YA5
• Online delivery License key download and online Certificate of License combined with SIMATIC PDM Software Media Package (SIMATIC PDM and device library software download) : Email address required!	6ES7658-3HA88-0YH5
Basic configuration for individual product packages	
SIMATIC PDM Basic V9.3 including 4 TAGs; product package for operation and configuration of field devices and components; communication via PROFIBUS DP/PA, HART (modem, RS 232, PROFIBUS/PROFINET), Modbus, Ethernet or PROFINET 6 languages (English, German, French, Italian, Spanish, Chinese), software class A, runs with Windows 10 Enterprise 2019/2021 LTSC and Windows Server 2019/2022 Standard Edition, for operation within the SIMATIC PCS 7 product family, the specifications there take precedence (see SIMATIC PDM V9.3 Readme for the latest information), floating license for 1 user Without SIMATIC PCS 7 Software Media Package	
• Goods delivery License key on USB flash drive and Certificate of License, bundled with 1 × SIMATIC PDM Software Media Package per order item	6ES7658-3AB88-0YA5
• Online delivery License key download and online Certificate of License combined with SIMATIC PDM Software Media Package (SIMATIC PDM and device library software download) : Email address required!	6ES7658-3AB88-0YH5

Selection and ordering data (continued)

Configuration for a local service and parameter assignment station	
SIMATIC PDM Service V9.3 Product package for service and measuring circuit tests on a local service station, with • SIMATIC PDM Basic incl. 4 TAGs • 50 TAGs 6 languages (English, German, French, Italian, Spanish, Chinese), software class A, runs with Windows 10 Enterprise 2019/2021 LTSC and Windows Server 2019/2022 Standard Edition, for operation within the SIMATIC PCS 7 product family, the specifications there take precedence (see SIMATIC PDM V9.3 Readme for the latest information), floating license for 1 user Without SIMATIC PCS 7 Software Media Package	
• Goods delivery License key on USB flash drive and Certificate of License, bundled with 1 × SIMATIC PDM Software Media Package per order item	6ES7658-3JD88-0YA5
• Online delivery License key download and online Certificate of License combined with SIMATIC PDM Software Media Package (SIMATIC PDM and device library software download) : Email address required!	6ES7658-3JD88-0YH5
Configuration for a central service and parameter assignment station	
SIMATIC PDM Stand alone Server V9.3 Product package for service and device management in plant units, with - SIMATIC PDM Basic incl. 4 TAGs - SIMATIC PDM Extended - SIMATIC PDM Server - 2 × SIMATIC PDM 1 Client - 100 TAGs 6 languages (English, German, French, Italian, Spanish, Chinese), software class A, runs with Windows 10 Enterprise 2019/2021 LTSC and Windows Server 2019/2022 Standard Edition, for operation within the SIMATIC PCS 7 product family, the specifications there take precedence (see SIMATIC PDM V9.3 Readme for the latest information), single license for 1 installation Without SIMATIC PCS 7 Software Media Package	
• Goods delivery License key on USB flash drive and Certificate of License, bundled with 1 × SIMATIC PDM Software Media Package per order item	6ES7658-3TX88-0YA5
• Online delivery License key download and online Certificate of License combined with SIMATIC PDM Software Media Package (SIMATIC PDM and device library software download) : Email address required!	6ES7658-3TX88-0YH5
SIMATIC PDM system-integrated product packages	

© Siemens AG 2024

Selection and ordering data (continued)

Configuration for integration in SIMATIC S7 configuration environment	
SIMATIC PDM S7 V9.3 Product package for use in a SIMATIC S7 configuration environment, with - SIMATIC PDM Basic incl. 4 TAGs - SIMATIC PDM Extended - SIMATIC PDM Integration in STEP 7/PCS 7 - 100 TAGs 6 languages (English, German, French, Italian, Spanish, Chinese), software class A, runs with Windows 10 Enterprise 2019/2021 LTSC and Windows Server 2019/2022 Standard Edition, for operation within the SIMATIC PCS 7 product family, the specifications there take precedence (see SIMATIC PDM V9.3 Readme for the latest information), floating license for 1 user Without SIMATIC PCS 7 Software Media Package	
• Goods delivery License key on USB flash drive and Certificate of License, bundled with 1 × SIMATIC PDM Software Media Package per order item	**6ES7658-3KD88-0YA5**
• Online delivery License key download and online Certificate of License combined with SIMATIC PDM Software Media Package (SIMATIC PDM and device library software download) : Email address required!	**6ES7658-3KD88-0YH5**
Configuration for integration in SIMATIC PCS 7 configuration environment	
SIMATIC PDM PCS 7 V9.3 Product package for use in a SIMATIC PCS 7 configuration environment 6 languages (English, German, French, Italian, Spanish, Chinese), software class A, runs with Windows 10 Enterprise 2019/2021 LTSC and Windows Server 2019/2022 Standard Edition, for operation within the SIMATIC PCS 7 product family, the specifications there take precedence (see SIMATIC PDM V9.3 Readme for the latest information) Floating license for 1 user, with - SIMATIC PDM Basic incl. 4 TAGs - SIMATIC PDM Extended - SIMATIC PDM Integration in STEP 7/PCS 7 - SIMATIC PDM Routing - 100 TAGs Without SIMATIC PCS 7 Software Media Package	
• Goods delivery License key on USB flash drive and Certificate of License, bundled with 1 × SIMATIC PDM Software Media Package per order item	**6ES7658-3LD88-0YA5**
• Online delivery License key download and online Certificate of License combined with SIMATIC PDM Software Media Package (SIMATIC PDM and device library software download) : Email address required!	**6ES7658-3LD88-0YH5**

Selection and ordering data (continued)

SIMATIC PDM PCS 7-FF V9.3 Product package for use in a SIMATIC PCS 7 configuration environment, including FOUNDATION Fieldbus H1 communication 6 languages (English, German, French, Italian, Spanish, Chinese), software class A, runs with Windows 10 Enterprise 2019/2021 LTSC and Windows Server 2019/2022 Standard Edition, for operation within the SIMATIC PCS 7 product family, the specifications there take precedence (see SIMATIC PDM V9.3 Readme for the latest information) Floating license for 1 user, with - SIMATIC PDM Basic incl. 4 TAGs - SIMATIC PDM Extended - SIMATIC PDM Integration in STEP 7/PCS 7 - SIMATIC PDM Routing - SIMATIC PDM Communication FOUNDATION Fieldbus - 100 TAGs Without SIMATIC PCS 7 Software Media Package	
• Goods delivery License key on USB flash drive and Certificate of License, bundled with 1 × SIMATIC PDM Software Media Package per order item	**6ES7658-3MD88-0YA5**
• Online delivery License key download and online Certificate of License combined with SIMATIC PDM Software Media Package (SIMATIC PDM and device library software download) : Email address required!	**6ES7658-3MD88-0YH5**
SIMATIC PDM PCS 7 Server V9.3 Product package for use in a SIMATIC PCS 7 configuration environment, including server functionality 6 languages (English, German, French, Italian, Spanish, Chinese), software class A, runs with Windows 10 Enterprise 2019/2021 LTSC and Windows Server 2019/2022 Standard Edition, for operation within the SIMATIC PCS 7 product family, the specifications there take precedence (see SIMATIC PDM V9.3 Readme for the latest information) Single license for 1 installation, with - SIMATIC PDM Basic incl. 4 TAGs - SIMATIC PDM Extended - SIMATIC PDM Integration in STEP 7/PCS 7 - SIMATIC PDM Routing - SIMATIC PDM Server - 100 TAGs Without SIMATIC PCS 7 Software Media Package	
• Goods delivery License key on USB flash drive and Certificate of License, bundled with 1 × SIMATIC PDM Software Media Package per order item	**6ES7658-3TD88-0YA5**
• Online delivery License key download and online Certificate of License combined with SIMATIC PDM Software Media Package (SIMATIC PDM and device library software download) : Email address required!	**6ES7658-3TD88-0YH5**

© Siemens AG 2024

Selection and ordering data (continued)

Optional product components for SIMATIC PDM	
SIMATIC PDM Extended V9.3 For enabling additional system functions 6 languages (English, German, French, Italian, Spanish, Chinese), software class A, runs with Windows 10 Enterprise 2019/2021 LTSC and Windows Server 2019/2022 Standard Edition, for operation within the SIMATIC PCS 7 product family, the specifications there take precedence (see SIMATIC PDM V9.3 Readme for the latest information), floating license for 1 user Without SIMATIC PCS 7/SIMATIC PDM Software Media Package	
• Goods delivery License key on USB flash drive and Certificate of License	6ES7658-3NX88-2YB5
• Online delivery (without SIMATIC PCS 7/SIMATIC PDM Software Media Package) License key download and online Certificate of License : Email address required!	6ES7658-3NX88-2YH5
SIMATIC PDM Integration in STEP 7/SIMATIC PCS 7 V9.3 For integration in a SIMATIC S7/SIMATIC PCS 7 configuration environment 6 languages (English, German, French, Italian, Spanish, Chinese), software class A, runs with Windows 10 Enterprise 2019/2021 LTSC and Windows Server 2019/2022 Standard Edition, for operation within the SIMATIC PCS 7 product family, the specifications there take precedence (see SIMATIC PDM V9.3 Readme for the latest information), floating license for 1 user Without SIMATIC PCS 7/SIMATIC PDM Software Media Package	
• Goods delivery License key on USB flash drive and Certificate of License	6ES7658-3BX88-2YB5
• Online delivery License key download and online Certificate of License : Email address required!	6ES7658-3BX88-2YH5
SIMATIC PDM Routing V9.3 For plant-wide navigation to field devices 6 languages (English, German, French, Italian, Spanish, Chinese), software class A, runs with Windows 10 Enterprise LTSC 2019 and LTSC 2021 64-bit, for operation within the SIMATIC PCS 7 product family, the specifications there take precedence (see SIMATIC PDM V9.3 Readme for the latest information), floating license for 1 user Without SIMATIC PCS 7/SIMATIC PDM Software Media Package	
• Goods delivery License key on USB flash drive and Certificate of License	6ES7658-3CX88-2YB5
• Online delivery License key download, online Certificate of License : Email address required!	6ES7658-3CX88-2YH5

Selection and ordering data (continued)

SIMATIC PDM Server V9.3 For activating the server functionality 6 languages (English, German, French, Italian, Spanish, Chinese), software class A, runs with Windows 10 Enterprise 2019/2021 LTSC and Windows Server 2019/2022 Standard Edition, for operation within the SIMATIC PCS 7 product family, the specifications there take precedence (see SIMATIC PDM V9.3 Readme for the latest information), single license for 1 installation Without SIMATIC PCS 7/SIMATIC PDM Software Media Package	
• Goods delivery License key on USB flash drive, Certificate of License	6ES7658-3TX88-2YB5
• Online delivery License key download and online Certificate of License : Email address required!	6ES7658-3TX88-2YH5
SIMATIC PDM Communication FOUNDATION Fieldbus V9.3 For communication with field devices on FOUNDATION Fieldbus H1 6 languages (English, German, French, Italian, Spanish, Chinese), software class A, runs with Windows 10 Enterprise 2019/2021 LTSC, for operation within the SIMATIC PCS 7 product family, the specifications there take precedence (see SIMATIC PDM V9.3 Readme for the latest information), floating license for 1 user Without SIMATIC PCS 7/SIMATIC PDM Software Media Package	
• Goods delivery License key on USB flash drive and Certificate of License	6ES7658-3QX88-2YB5
• Online delivery License key download and online Certificate of License : Email address required!	6ES7658-3QX88-2YH5
SIMATIC PDM HART Server V9.3 For using HART multiplexers as well as for configuration of WirelessHART field devices 6 languages (English, German, French, Italian, Spanish, Chinese), software class A, runs with Windows 10 Enterprise LTSC 2019 and LTSC 2021 64-bit, for operation within the SIMATIC PCS 7 product family, the specifications there take precedence (see SIMATIC PDM V9.3 Readme for the latest information), floating license for 1 user Without SIMATIC PCS 7/SIMATIC PDM Software Media Package	
• Goods delivery License key on USB flash drive and Certificate of License	6ES7658-3EX88-2YB5
• Online delivery License key download and online Certificate of License : Email address required!	6ES7658-3EX88-2YH5

© Siemens AG 2024

Selection and ordering data (continued)

SIMATIC PDM Command Interface V9.3 Use of remote control of SIMATIC PDM with 1 × SIMATIC PDM 1 Client Note: Special conditions of purchase and supply	
• Goods delivery (without SIMATIC PCS 7/SIMATIC PDM Software Media Package) License key on USB flash drive and Certificate of License	**6ES7658-3SX88-2YB5**
SIMATIC PDM 1 Client Cumulative client license for SIMATIC PDM configurations with SIMATIC PDM Server, software class A, single license for 1 installation	
• Goods delivery License key on USB flash drive and Certificate of License	**6ES7658-3UA00-2YB5**
• Online delivery License key download and online Certificate of License : Email address required!	**6ES7658-3UA00-2YH5**
SIMATIC PDM TAGs TAG licenses for expanding the available TAG volume, cumulative, software class A, floating license for 1 user	
• Goods delivery License key on USB flash drive and Certificate of License	
- 10 TAGs	**6ES7658-3XC00-2YB5**
- 100 TAGs	**6ES7658-3XD00-2YB5**
- 1 000 TAGs	**6ES7658-3XE00-2YB5**
• Online delivery License key download and online Certificate of License : Email address required!	
- 10 TAGs	**6ES7658-3XC00-2YH5**
- 100 TAGs	**6ES7658-3XD00-2YH5**
- 1 000 TAGs	**6ES7658-3XE00-2YH5**
SIMATIC PDM Software Media Package	
SIMATIC PDM Software Media Package V9.3 Installation software without license, 6 languages (English, German, French, Italian, Spanish, Chinese), software class A, runs with Windows 10 Enterprise 2019/2021 LTSC, for operation within the SIMATIC PCS 7 product family, the specifications there take precedence (see SIMATIC PDM V9.3 Readme for the latest information) Without SIMATIC PCS 7 Software Media Package Note: Can only be used in conjunction with a valid license or in demo mode!	
• Goods delivery SIMATIC PDM and device library software on DVD	**6ES7658-3GX88-0YT8**
• Online delivery SIMATIC PDM and device library software download : Email address required!	**6ES7658-3GX88-0YG8**

Technical specifications

SIMATIC PDM V9.3	
Hardware	• PG/PC/notebook with processor corresponding to operating system requirements
Operating system (alternatives)	• Windows 10 Professional • Windows 10 Enterprise 2019 LTSC • When integrated, specifications for SIMATIC PCS 7 take precedence
Integration in STEP 7/PCS 7	• SIMATIC PCS 7 V8.1/V8.2 (without Communication FOUNDATION Fieldbus) • SIMATIC PCS 7 V9.x
SIMATIC PDM Client	• Microsoft Internet Explorer 10 or 11 • Google Chrome

More information

Update/Upgrade

Existing installations based on SIMATIC PDM V8.x/V9.0 (including SP in each case) can be upgraded straight to V9.3 with upgrade packages.

Projects with SIMATIC PDM V7.0 can only be upgraded to version 9.3 by first upgrading to version 8.0. Two upgrade packages are offered for SIMATIC PDM V8.x/V9.0:

- SIMATIC PDM Upgrade Package Basic[1)] (with/without SIMATIC PDM HART Server option in each case) for configurations based on:
  - SIMATIC PDM Basic
  - SIMATIC PDM Service
  - SIMATIC PDM S7
  - SIMATIC PDM PCS 7
- SIMATIC PDM Upgrade Package Complete[1)] for configurations based on:
  - SIMATIC PDM PCS 7 Server
  - SIMATIC PDM PCS 7-FF

1) Optional product components for SIMATIC PDM such as PDM Extended, PDM Integration in STEP 7/PCS 7, PDM Routing, PDM Server and PDM Communication FOUNDATION Fieldbus are each included in a product package listed in the SIMATIC PDM Upgrade Package Basic or SIMATIC PDM Upgrade Package Complete and are implicitly authorized to be updated via the corresponding license. The SIMATIC PDM Upgrade Package Complete is required for use of the product components PDM Server or PDM Communication FOUNDATION Fieldbus.

You can find more information in the section "Update/Upgrade Packages" under "Updates/Upgrades Asynchronous to the PCS 7 Version" - "Upgrades SIMATIC PDM", as well as "Sales and delivery release: SIMATIC PDM V9.3"
https://support.industry.siemens.com/cs/ww/en/view/109971621

© Siemens AG 2024

Overview

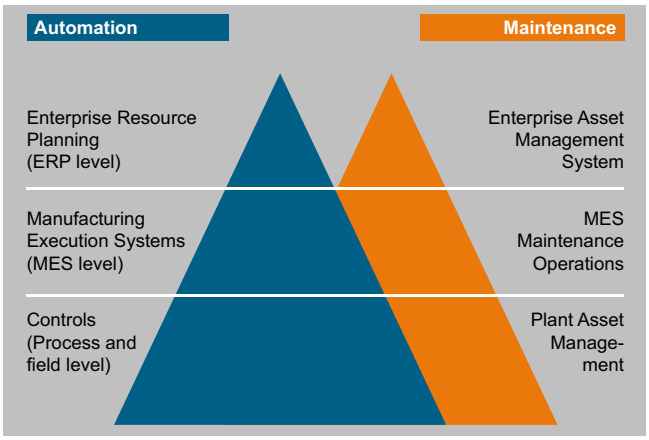

The Maintenance Station is specialized for plant asset management (also known as plant-floor asset management), i.e. the management of company assets that are used as fixed assets for production. Its tasks include efficient administration and management of equipment in technological systems, in particular the I&C equipment, with the objective of maintaining and increasing the value.

The following maintenance strategies are used for this purpose:

- **Corrective maintenance**

  Response to pending error and diagnostic messages

  - Failures are risked or minimized by redundant configurations
  - Maintenance in the form of repair or replacement

- **Preventive maintenance**

  Preventive diagnostics and maintenance

  - Initiation of appropriate maintenance measures before a fault actually occurs
  - Maintenance in the form of time-dependent or status-dependent maintenance (depending on degree of wear)

- **Predictive maintenance**

  Predictive diagnostics for timely detection of potential problems and determination of the remaining service life

Using the Maintenance Station, the maintenance engineer can check the hardware of the automation system, evaluate its diagnostic messages and information and derive maintenance measures from them. He or she is thus in a position to plan, control and document the entire maintenance cycle - starting with the arrival of a diagnostics message, continuing with the evaluation of detailed diagnostics information and the planning, initiation and tracking of maintenance measures, all the way to their completion.

Overview (continued)

SIMATIC PCS 7 Maintenance Station

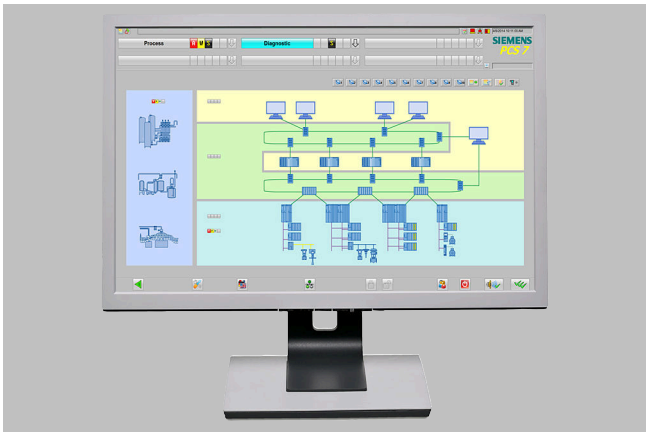

The SIMATIC PCS 7 Maintenance Station makes additional hardware or software components for plant asset management superfluous. Fully integrated in SIMATIC PCS 7, it supplements the process control system with a valuable instrument for minimizing the total cost of ownership over the complete life cycle of the plant.

Parallel to process control, the SIMATIC PCS 7 Maintenance Station provides consistent maintenance information and functions for the system components of the plant (assets):

- The plant operator receives all process-relevant information via the operator system, as well as an overview of the diagnostics status of the process control system.
- The maintenance engineer checks the hardware of the automation system using the SIMATIC PCS 7 Maintenance Station, and processes its diagnostic messages and maintenance requests.

The SIMATIC PCS 7 Maintenance Station provides maintenance and service personnel access to:

- Components of the process control system, e.g. intelligent field devices and I/O modules, fieldbuses, controllers, network components and plant buses as well as Single Stations, Servers and Clients
- Assets that do not directly belong to the process control system, such as pumps, motors, centrifuges, heat exchangers (mechanical assets) or control loops. They are represented by proxy objects in which the diagnostics rules are stored.

It is therefore no longer the case that maintenance functions and information are only available in a separate level independent of the production process.

Plant operators and service personnel are thus able to constantly act the following, for example:

- Service requests
- Service approvals
- Placing an asset in "In Service" status
- Information regarding a completed service measure

© Siemens AG 2024

Design

Architecture

The SIMATIC PCS 7 Maintenance Station uses hardware and software components of the Engineering System (ES) and Operator System (OS) for asset management. Depending on the project-specific SIMATIC PCS 7 architecture, it can be implemented on the basis of a SIMATIC PCS 7 BOX (PCS 7 BOX RTX ES/OS system or PCS 7 BOX ES/OS system), a SIMATIC PCS 7 ES single station, or a client/server combination.

As a result of the close interlacing, ES, OS, and asset management functions run on common hardware. Such a multi-functional station cannot only be used for asset management, but also for system engineering or HMI.

The following table shows possible hardware/software configurations of the SIMATIC PCS 7 Maintenance Station (MS).

SIMATIC PCS 7 Maintenance Station as	Single-user system	Single-user system	Multi-user system (client-server combination)		
Required SIMATIC PCS 7 hardware/software	PCS 7 BOX	PCS 7 ES Single Station	PCS 7 MS/ES Client	PCS 7 MS Server	PCS 7 ES Server or Single Station
Basic hardware					
SIMATIC PCS 7 BOX RTX ES/OS system or SIMATIC PCS 7 BOX ES/OS system	●	–	–	–	–
SIMATIC PCS 7 Industrial Workstation for ES/OS single system	–	●	●	–	● (Single Station)
SIMATIC PCS 7 Industrial Workstation for OS server	–	–	–	●	● (Server)
Required SIMATIC PCS 7 software corresponding to operating system of basic hardware (without taking into account the quantity frameworks)					
SIMATIC PCS 7 Engineering software AS/OS	–	●	●	–	●
Optional[1]: SIMATIC PDM PCS 7 Server[2]	●	●	–	–	●
SIMATIC PCS 7 OS software Server	–	–	–	●	–
SIMATIC PCS 7 OS software Client	–	–	●	–	–
SIMATIC PCS 7 Maintenance Station Engineering	●	●	●	–	●
SIMATIC PCS 7 Maintenance Station Runtime (basic package and additional asset TAGs)	●	●	–	●	–

1) Only when you use intelligent field devices or the AssetMon functionality
2) Allows SIMATIC PDM to be started on every MS client

The MS Server can even be operated as a redundant pair of servers. The redundant MS servers must be configured like redundant OS servers and expanded by the SIMATIC PCS 7 Maintenance Station Runtime functionality.

The SIMATIC PCS 7 Maintenance Station Runtime basic package already contains 100 asset TAGs. These can be expanded by cumulative SIMATIC PCS 7 Maintenance Station Runtime licenses for 100 or 1 000 asset TAGs (Count Relevant Licenses).

The signaling system, user interface, picture hierarchy and operator prompting are based on the HMI philosophy of the Operator System. The diagnostics data of all assets are displayed on uniform faceplates whose contents depend on the intelligence of the respective component. This means that working with the SIMATIC PCS 7 Maintenance Station is simple and intuitive – a time-consuming training period is not required.

The SIMATIC PCS 7 Maintenance Station uses the optional product package SIMATIC PDM PCS 7 Server for parameter assignment and diagnostics of the devices integrated via an Electronic Device Description (EDD).

For editing the devices, the user receives the functional rights corresponding to their role following identification. User management and access control for the SIMATIC PCS 7 Maintenance Station is handled by SIMATIC Logon integrated in SIMATIC PCS 7.

SIMATIC PDM supplies comprehensive device information for display and further processing on the Maintenance Station and can be called from any SIMATIC PCS 7 Maintenance Station Client (MS Client). The display of diagnostics displays structured according to the plant hierarchy with the operating states of the SIMATIC PCS 7 components is possible both on purely MS clients and combined MS/OS clients. The faceplates of these stations can also display the enhanced diagnostics information determined by SIMATIC PDM. A device-specific call of SIMATIC PDM is also possible. However, enhanced online diagnostics functions in conjunction with HW Config can only be called on stations that are both an MS client and engineering station for SIMATIC PCS 7 at the same time.

Configuration

The SIMATIC PCS 7 Maintenance Station is based on the hardware and software project of the application which is generated during the standard configuration with the SIMATIC PCS 7 engineering system. With system support, all data relevant to the plant asset management are derived from the project data of the application, and the diagnostics screens are also generated, simply by pressing a

© Siemens AG 2024

Design (continued)

button. The procedure is simple, and requires no additional configuration work:

- Generation of the hardware and software project of the application
- Parameter assignment for optional functionalities
- System-supported generation of the diagnostics screens with all components present in the project, including the picture hierarchy based on the project's hardware structure
- Compilation of the configuration data, and downloading to the operator station and Maintenance Station with subsequent test and commissioning phase

The names of imported pictures, icons, etc. can be permanently changed for further use in the maintenance project.

Conformity to international standards, specifications, and recommendations

Plant asset management with the SIMATIC PCS 7 Maintenance Station conforms to international standards, specifications, and recommendations. It is based on the NAMUR requirements (process control standards committee in the chemical and pharmaceutical industries) defined for systems for plant asset management and for status messages from field devices:

- NAMUR recommendation NE129 (requirements for systems for plant asset management)
- NAMUR recommendation NE105 (requirements for the integration of field devices in engineering tools)
- NAMUR recommendation NE107 (status messages from field devices "Device failure", "Maintenance requirements", "Function check")

In addition, it also observes IEC 61804-2 for describing devices by means of the Electronic Device Description Language (EDDL) and specifications made by the PROFIBUS & PROFINET International (PI) organization, e.g.:

- PROFIBUS Profile Guidelines Identification & Maintenance Functions
- PROFIBUS PA Profile for Process Control Devices

© Siemens AG 2024

Function

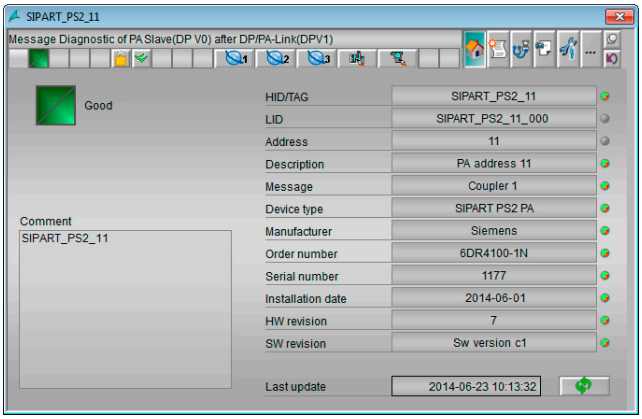

Diagnostic message of a component in the "Identity" faceplate view

The SIMATIC PCS 7 Maintenance Station provides maintenance engineers with comprehensive maintenance information on the system components (assets) of the plant. Starting from the overview display, maintenance engineers can navigate to the diagnostics screens of the subordinate hardware levels to obtain information on the diagnostics status of individual plant areas or components. If a fault is signaled in the overview display, the "Loop in alarm" function permits rapid switching to the diagnostics faceplate of the associated component.

The scope of information available depends on the individual possibilities of the asset, and is filtered according to the user's area of responsibility.

The following information is available, for example:

- Display of diagnostics status detected by the system
- Information on the component, such as process tag name, manufacturer or serial number
- Display of diagnostic messages of an individual component
- Visualization of the type and current state of the initiated maintenance measure

Information on mechanical assets

For mechanical assets without self-diagnostics (pumps, motors, etc.), the AssetMon function block can determine inadmissible operating states from various measured values and their deviations from a defined normal status. These are displayed as maintenance alarms on the SIMATIC PCS 7 Maintenance Station. AssetMon is able to process up to 3 analog values and up to 16 binary values.

In addition, AssetMon is suitable for implementation of:

- Individual diagnostics structures
- Project-specific diagnostics rules
- Condition monitoring functions

Enhanced information for assets according to IEC 61804-2

More information can be called up for assets described by the electronic device description (EDD) according to IEC 61804-2. This information is automatically read out of the components and made available by SIMATIC PDM in the background.

- Device type information (electronic rating plate)

Function (continued)

- Detailed diagnostics information
  - Device-specific information from the manufacturer
  - Information on fault diagnostics and troubleshooting
  - Additional documentation
- Results of internal condition monitoring functions
- Status information, e.g. local configuration changes
- Information on changes (audit trail report)
- Parameter information

Visualization of the maintenance information

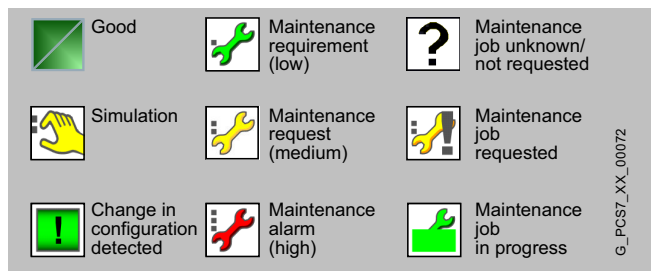

Uniform symbols for visualization of the maintenance status as well as operator prompting

The hierarchical structuring of information and the uniform symbols support the overview, facilitate orientation, and permit the maintenance engineer to rapidly access detailed information starting from the plant overview.

The symbol set defined for the plant asset management contains symbols which identify the diagnostic status of the devices/components, the relevance of the maintenance request, and the status of the maintenance measure.

Group displays in the plant overview visualize the diagnostics status of the subordinate structures/components according to a type of traffic light with red, yellow or green.

In line with their significance, the components described with a device description package in SIMATIC PDM can be marked as follows and also directly filtered using these features:

- Normal
- Important
- Safety Instrumented Function (SIF)
- Device checked
- Project-specific write protection

Diagnostics screens display the status of components and subordinate devices/components through standardized symbols with the following elements:

- Bitmap of component
- Tag identification of component
- Maintenance status display
- Group display for diagnostics status of subordinate components

Clicking an element in the symbol display either opens the subordinate hierarchy level or a component faceplate. The component faceplate offers various views of the associated component with additional device-specific information, e.g. an identification, message or maintenance view.

© Siemens AG 2024

Selection and ordering data

SIMATIC PCS 7 Maintenance Station Runtime Basic Package V10.0 including SNMP OPC server license and 100 asset TAGs 6 languages (English, German, French, Italian, Spanish, Chinese), software class A Runs with the following operating systems (see SIMATIC PCS 7 V10.0 Readme for latest information): • Windows 10 Enterprise LTSC 2019 • Windows 10 Enterprise LTSC 2021 • Windows Server 2019 Standard Edition • Windows Server 2022 Standard Edition Single license for 1 installation, without SIMATIC PCS 7 Software Media Package	
• Goods delivery License key on USB flash drive, Certificate of License	6ES7658-7GB78-0YB0
• Online delivery License key download, online Certificate of License : Email address required!	6ES7658-7GB78-0YH0
SIMATIC PCS 7 Maintenance Station Runtime Asset TAGs for adding asset TAGs, cumulative Language-neutral, software class A, single license for 1 installation Without SIMATIC PCS 7 Software Media Package	
• Goods delivery License key on USB flash drive, Certificate of License	
- 100 asset TAGs	6ES7658-7GB00-2YB0
- 1 000 asset TAGs	6ES7658-7GC00-2YB0
• Online delivery License key download, online Certificate of License : Email address required!	
- 100 asset TAGs	6ES7658-7GB00-2YH0
- 1 000 asset TAGs	6ES7658-7GC00-2YH0
Maintenance Station Engineering	
SIMATIC PCS 7 Maintenance Station Engineering V10.0 6 languages (English, German, French, Italian, Spanish, Chinese), software class A Runs with the following operating systems (see SIMATIC PCS 7 V10.0 Readme for latest information): • Windows 10 Enterprise LTSC 2019 • Windows 10 Enterprise LTSC 2021 • Windows Server 2019 Standard Edition • Windows Server 2022 Standard Edition Floating license for 1 user, without SIMATIC PCS 7 Software Media Package	
• Goods delivery License key on USB flash drive, Certificate of License	6ES7658-7GX78-0YB5

Selection and ordering data (continued)

• Online delivery License key download, online Certificate of License : Email address required!	6ES7658-7GX78-0YH5

Asset TAGs

Asset TAGs license the number of asset objects that are monitored with the SIMATIC PCS 7 Maintenance Station. An asset object represents individual hardware components within a SIMATIC PCS 7 project, e.g.

- Measuring devices monitored per EDD, positioners, switching devices, or remote I/O stations
- Basic devices or Ethernet components monitored per OPC coupling in the Maintenance Station

The asset TAGs of the SIMATIC PCS 7 Maintenance Station Runtime licenses (sets of 100 and 1 000) are cumulative (Count Relevant Licenses).

© Siemens AG 2024

Overview

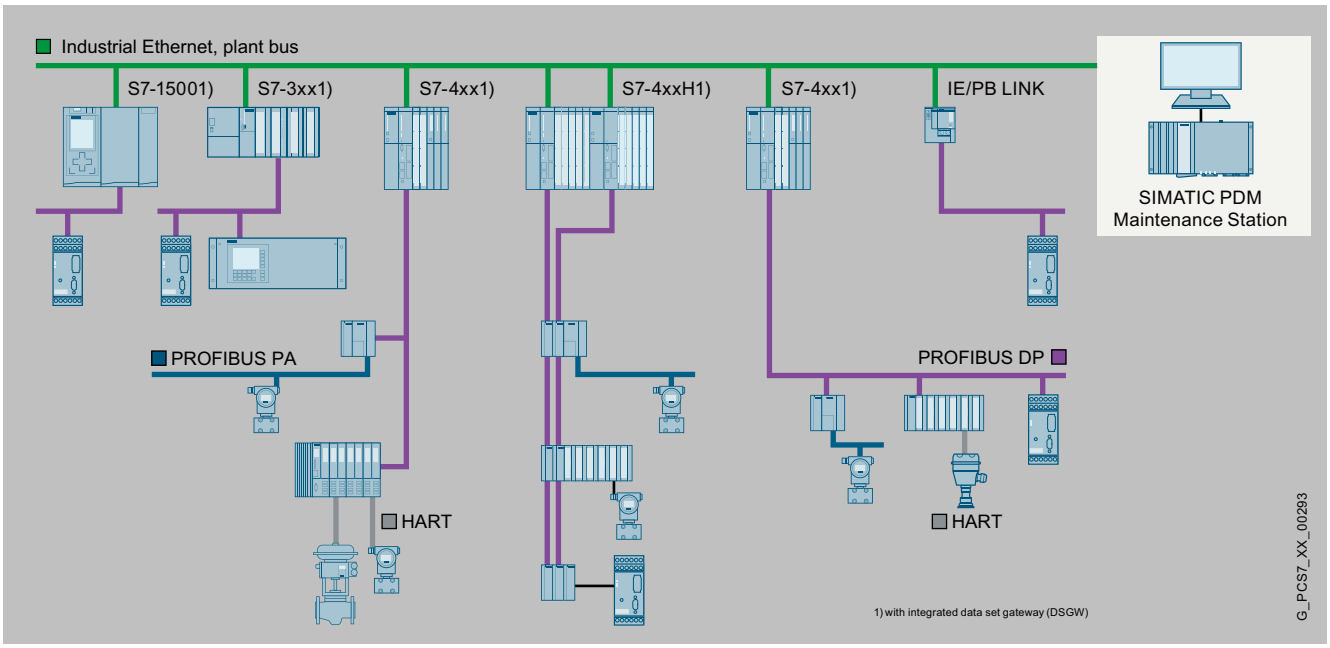

Integration of the system-independent SIMATIC PDM Maintenance Station in SIMATIC and SIMATIC PCS 7 to connect to the plant bus

In contrast to SIMATIC PCS 7 Maintenance Station, which is seamlessly integrated into the SIMATIC PCS 7 process control system, SIMATIC PDM Maintenance Station operates on separate hardware, independent of the automation projects and the employed automation systems (controllers). It integrates field devices and components via their Electronic Device Description and uses the communication paths of SIMATIC PDM to exchange information.

Note:

The SIMATIC PDM Maintenance Station is based on software components from SIMATIC PCS 7.

The device management and integration functions are based on SIMATIC PDM.

© Siemens AG 2024

Application

The SIMATIC PDM Maintenance Station is suitable for all projects which use communication modes supported by SIMATIC PDM as well as field devices described by an Electronic Device Description (EDD/FDI).

Field devices and field components which were integrated into SIMATIC PDM using an EDD/FDI device description can be monitored and evaluated.

It is also easy to monitor and diagnose HART field devices and field components connected to HART multiplexers or communicating via Wireless HART on site.

The SIMATIC PDM Maintenance Station is especially suited to the following tasks:

- Implementation of small to medium-sized service projects. Up to 1000 devices can be managed per Maintenance Station.
- Greater quantities can be attained by using multiple SIMATIC PDM Maintenance Stations.
- Configuration of unit-granular maintenance stations or stand-alone solutions.
- Formation of up to three field device groups for cyclic data export functions.
- Maintenance station retrofitting in SIMATIC S7/SIMATIC PCS 7 projects independent of the project version.
- Implementation of maintenance stations in SIMATIC S7/SIMATIC PCS 7 projects without "Plant-wide data record routing" functionality.
- Separate technological projects and service projects.
- Implementation of maintenance stations in projects without SIMATIC S7/SIMATIC PCS 7 automation systems (controllers).

Design

The SIMATIC PDM Maintenance Station on a software package with the following contents:

- SIMATIC PCS 7 Media Package for circulation media
- SIMATIC PDM Device Description Library
- License packages for PDM MS and SIMIT VC

The SIMATIC PDM Maintenance Station should ideally be operated on a Microbox PCS IPC BX-39A (IPC427G), as it is suitable for 24-hour continuous operation at temperatures from 0 to 50 °C due to its excellent physical properties.

The PC Station should have the following minimum requirements:

- 32 GB RAM
- 256 GB SSD space

Pre-installed software

- Windows 10 Enterprise 2021 LTSC

Included software

- SIMATIC PCS 7 V10.0 Media Package for SW Package Installation
- SIMATIC PDM Device Description Library 1#2024

© Siemens AG 2024

Function

The functionality of the SIMATIC PDM Maintenance Station is largely based on the SIMATIC PCS 7 Maintenance Station and the SIMATIC PDM Process Device Manager for stand-alone operation. The operator interfaces are comparable with those of the SIMATIC PCS 7 Maintenance Station configured as single station. SIMATIC PDM integrates the intelligent field devices (sensors/actuators) and field components (remote I/Os, multiplexers, control room devices, compact controllers, etc.) via their Electronic Device Description (EDD).

For communication with field devices/components, SIMATIC PDM Maintenance Station uses the SIMATIC PDM communication paths over the following communication interfaces:

- Industrial Ethernet
- PROFIBUS DP
- PROFIBUS PA
- HART on PROFIBUS
- PROFINET
- HART Multiplexer
- WirelessHART
- MODBUS (on request)

The diagnostic information is determined over a cyclic polling algorithm. Polling can be configured for each individual field device in the SIMATIC PDM Maintenance Station in cycles of 10 min/1 h/12 h/1 d.

Selection and ordering data

SIMATIC PDM Maintenance Station Single Station V5.0 software Software for engineering and operation; with virtual controller; with SIMATIC PCS 7 Media Package; SIMATIC PDM, SIMATIC PDM Device Library 1#2024 5 languages (English, German, French, Italian, Spanish) Software class A, single license for 1 installation With SIMATIC PCS 7 Software Media Package License frame for up to 1 000 objects (OS RT PO, MS RT PO) 104 PDM TAGs License VC dongle VC V11.2	
• Goods delivery License key on USB flash drive, Certificate of License; Bundled with 1 × SIMATIC PCS 7 Software Media Package per order item	**6ES7651-5GX05-0YA5**
SIMATIC PDM Maintenance Station Upgrade Package V4.0 ⇒ V5.0 Software upgrade for engineering and operation; with virtual controller; with SIMATIC PCS 7 Media Package; SIMATIC PDM, SIMATIC PDM Device Library 1#2024 5 languages (English, German, French, Italian, Spanish); software class A; single license for 1 installation; with SIMATIC PCS 7 Software Media Package License VC dongle VC V11.2	
• Goods delivery License key on USB flash drive, Certificate of License; Bundled with 1 × SIMATIC PCS 7 Software Media Package per order item	**6ES7651-5GX05-0YE5**
SIMATIC PDM Maintenance Station Software Update Service (SUS) Subscription for 1 year with automatic extension Requirement: current software version Software Media Package SIMATIC PCS 7 Software Media Package SIMATIC PDM	
• Goods delivery License key on USB flash drive and Certificate of License	**6ES7658-3XX03-0YL8**

Add-on/expansion components

SIMATIC PDM TAGs TAG licenses for expanding the available TAG volume, cumulative, software class A, floating license for 1 user	
• Goods delivery License key on USB flash drive and Certificate of License	
- 10 TAGs	**6ES7658-3XC00-2YB5**

© Siemens AG 2024

Selection and ordering data (continued)

- 100 TAGs	6ES7658-3XD00-2YB5
- 1 000 TAGs	6ES7658-3XE00-2YB5
• Online delivery License key download and online Certificate of License : Email address required!	
- 10 TAGs	6ES7658-3XC00-2YH5
- 100 TAGs	6ES7658-3XD00-2YH5
- 1 000 TAGs	6ES7658-3XE00-2YH5
Keyboard/mouse	
USB keyboard TKL-105 Color: black	
• Keyboard layout, German	6AV6881-0AU14-0AA0
• Keyboard layout, US International	6AV6881-0AU14-1AA0
SIMATIC HMI USB mouse Optical mouse with scroll wheel and USB connection, color anthracite	6AV2181-8AT00-0AX0

© Siemens AG 2024

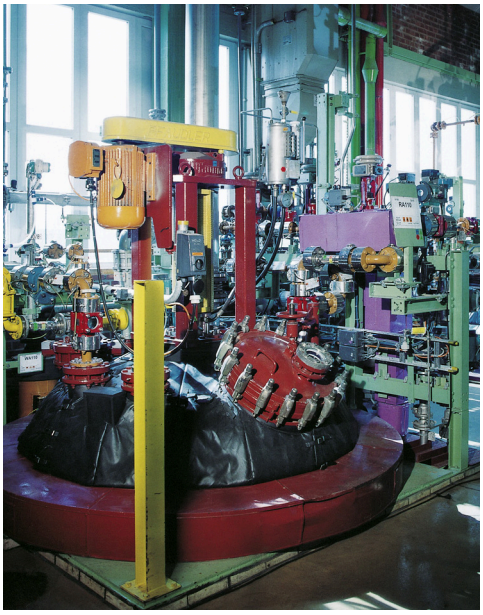

8/2 **SIMATIC BATCH**
8/4 SIMATIC BATCH software

© Siemens AG 2024

Overview

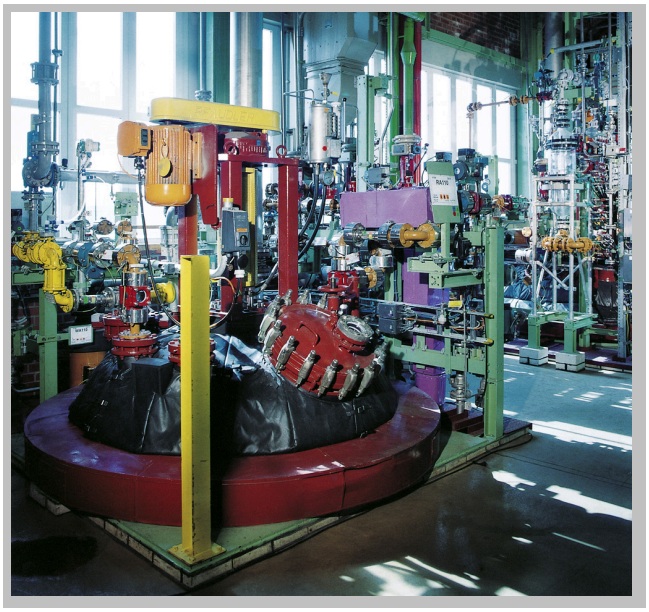

In the process industry, discontinuous processes – so-called batch processes – are of great significance. Permanently shorter product lifecycles as well as the versatility required by consumers are two of the reasons for this.

Product quality that stays the same even in the umpteenth batch, quick response to changed market conditions, traceability for production (FDA compliance), fulfillment of legal standards, as well as the economic and technical necessity to utilize production plants flexibly and optimally – all of this places high demands on plant automation.

The SIMATIC PCS 7 process control system with the SIMATIC BATCH software package offers the right solution for low-cost and effective automation of batch processes.

SIMATIC BATCH is completely integrated in SIMATIC PCS 7, both in the visualization and in the engineering system. Thanks to the modular design and the flexible scaling, it can be used in small test centers as well as in production plants of any size.

Design

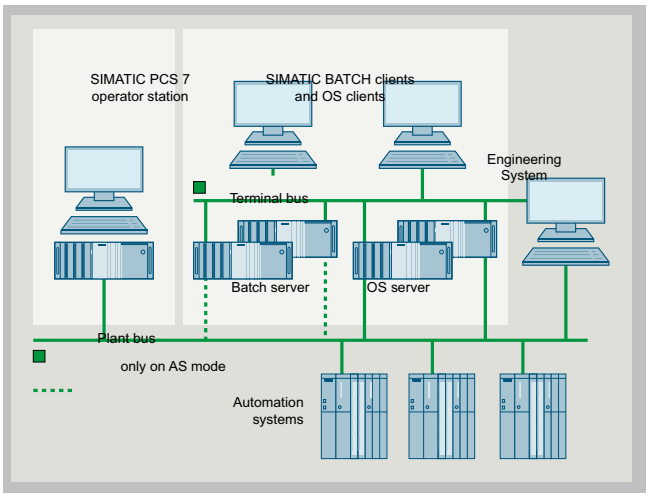

Scalability

SIMATIC BATCH is configured as a single station system or as a client/server system and can be used in plants of any size due to its modular architecture and scalability in cumulative SIMATIC BATCH UNITs (sets of 1, 10 and 50 plant unit instances).

Single-user system for small applications

For small batch applications, SIMATIC BATCH can be installed together with the OS software on a single station system.

Client/server configuration

However, a characteristic feature of the automation of batch processes using SIMATIC BATCH is client/server architectures in which one Batch server and multiple Batch clients together process a plant project. The Batch Server in such a configuration can also be configured with redundancy in order to increase availability.

SIMATIC BATCH clients and OS clients can run on separate or common basic hardware.

The Batch server software, SIMATIC BATCH Basic or SIMATIC BATCH Server, provided for configuration of a Batch server usually runs on dedicated server hardware (Batch Server). Depending on the load on the Operator System, the OS Server and Batch Server software can also be run on shared server hardware (OS/Batch Server).

The hardware configuration of the Batch Server depends on the SIMATIC BATCH operating mode:

- In **PC mode**, the complete recipe logic is executed in the batch server. If SIMATIC BATCH is only executed in PC mode, the Batch server does not require a connection to the plant bus. Communication with the automation system is via the Operator System.
- In **AS mode**, the unit recipe logic is executed in the automation system. Mixed operation with PC operating mode is also possible within a batch where unit recipes are run on both the Batch Server and on the automation system. In AS mode, the Batch Server requires a connection to the plant bus for communication with the automation system.

System connection

Batch single station and Batch server can be connected to the Industrial Ethernet plant bus via a CP 1623 communications module or via a simple FastEthernet network adapter with BCE (suitable for communication with up to 8 automation systems; not redundant systems).

The IE variants of the SIMATIC Process Control System IPC for single stations and servers are equipped with a CP 1623 communications module with the SIMATIC NET HARDNET-IE S7 communication software. When using redundant automation systems, the SIMATIC Pro-

© Siemens AG 2024

Design (continued)

cess Control System IPC requires SIMATIC NET HARDNET-IE S7-REDCONNECT communication software instead of the SIMATIC NET HARDNET-IE S7 communication software. SIMATIC NET HARDNET-IE S7-REDCONNECT PowerPack can be used to upgrade the communication software. For order data on this, see "Industrial Communication" section, "Industrial Ethernet, System Connection PCS 7 Systems" subsection.

The 10/100/1000 Mbps Ethernet RJ45 port is already onboard and can be used for connecting to the terminal bus.

Redundancy

SIMATIC BATCH supports Batch server redundancy. The two Batch Servers in a redundant pair of servers have identical configurations. A separate Ethernet connection via separate network adapters/connectors between these servers is used to optimize the internal communication. This must always be provided as an Ethernet connection. This also applies if SIMATIC BATCH software and SIMATIC PCS 7 OS software are installed together on the redundant pair of servers. The serial RS 232 connection described in the section "OS redundancy" is not possible in this case.

A redundant optical or electrical connection can be used depending on the ambient conditions and the distance between the two Batch Servers, for example up to 100 m per crossover network cable (RJ45 plug). For details, refer to the "High Availability Process Control Systems" manual; for appropriate cable material and other accessories, see Catalog IK PI.

Note:

Licenses for the server, API and UNITs and for SIMATIC BATCH OS Control Web Client must be installed on both servers for the redundant version.

Basic hardware

The modularity and flexibility of SIMATIC BATCH are optimally supported by the hardware available. The basic hardware spectrum from the "Process Control System IPC" section can be used for SIMATIC BATCH. Please note that the operating system and the ES/OS software of the SIMATIC PCS 7 process control system are preinstalled as standard on the SIMATIC Process Control System IPC of the single station, server and client versions. If these basic devices are used for SIMATIC BATCH, it is possible to extend the existing SIMATIC PCS 7 installation or restore it for the operating system using the Restore DVD set.

Expansion options

OS/Batch Single Station and Batch client can be optionally expanded for multi-monitor mode with up to 4 monitors. Using multi-monitor mode, the visualization of a plant/unit can be divided among 2 to 4 process monitors per operator station using different views. These plant sections can all be operated using just one keyboard and one mouse.

Note:

Since all messages from SIMATIC BATCH are processed in the message system of the Operator System, the use of a signal module is only recommendable with multi-function OS/Batch stations (clients, single stations).

Integration

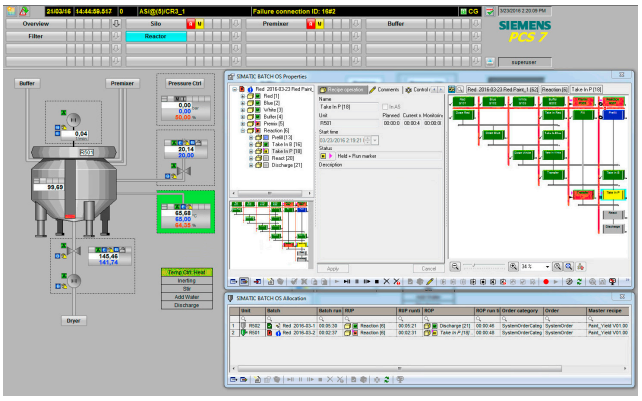

Process picture with integrated OS Control

Integration in SIMATIC PCS 7

SIMATIC BATCH is completely integrated in SIMATIC PCS 7. The plant data can be configured entirely using the engineering system. The engineering system transfers all data required for creating recipes to the Batch server. It is therefore possible to edit recipes separate from the engineering system. Changes to the configuration which are made in the engineering system are available to the Batch server using an update function (online/offline).

SIMATIC BATCH supports the operation and monitoring of batch processes by means of standard faceplates (faceplates and OS controls integrated in the process picture). With SIMATIC PCS 7 V10.0, operation is also possible using OS controls configured on a Web client.

The SIMATIC Logon integrated in SIMATIC PCS 7 uses SIMATIC BATCH for the following functions:

- Central user administration with access control
- "Electronic Signature" function

  This means that actions cannot be performed until enabled by authorized users/user groups.

A smart card reader that is suitable as a login device is offered in the chapter "SIMATIC Process Control System IPC", section "Expansion components, Smart card readers".

Communication with the automation systems

Depending on the operating mode, SIMATIC BATCH communicates with the automation systems via the Operator System or directly via S7-DOS.

SFC instances derived from a SFC type template are generally used as the interface to the subordinate automation level. The properties of the SFC type can be defined in a properties dialog, including:

- Control strategies
- Setpoint/actual value
- Instance parameters
- Timers

In addition to the SFC instances, individual unit parameters can be described by parameter steps of the recipe.

© Siemens AG 2024

Overview

The product structure of the SIMATIC BATCH software is optimized for configuration of client-server systems and single station systems. SIMATIC BATCH Basic and SIMATIC BATCH Server are two alternative software products for the server installation, and differ in their functional scope.

Additional functions of SIMATIC BATCH Server compared to SIMATIC BATCH Basic are, for example:

- ROP Library
- Separation Procedures/Formulas
- Electronic signature
- MES High Level Synchronization
- Route Control Integration

In exceptional cases, the SIMATIC BATCH Client software can also be operated on the BATCH server. However, the preferred target system for the SIMATIC BATCH Client software is the standalone BATCH client.

The SIMATIC BATCH Single Station Package is intended for the BATCH single station. The SIMATIC BATCH Recipe System already integrated in the SIMATIC BATCH Single Station Package must be ordered separately for the stations of the client/server system. The SIMATIC BATCH API can be optionally used in both the BATCH single station and in BATCH servers.

The SIMATIC BATCH project can be matched quantitatively to the plant size using SIMATIC BATCH UNITs (cumulative quantity options for instances of plant units).

SIMATIC BATCH Server Expansion Pack

With highly complex process cells that can process a high volume of batches, the total amount of main memory required by all batches together can exceed the level of 1.5 GB. No additional batches can be released or started. This can be avoided by additionally installing **Server Expansion Packs**, each of which provides an additional 500 MB of work memory.

Software products/licenses	BATCH single station	BATCH server	Redundant BATCH server pair Server A	Redundant BATCH server pair Server B	BATCH client
Basic software					
SIMATIC BATCH Single Station Package[1]	●	–	–	–	–
SIMATIC BATCH Basic[2][6]	–	●	●	●	–
SIMATIC BATCH Server[2][6]	–	●	●	●	–
SIMATIC BATCH Client[3]	–	o	o	o	●
SIMATIC BATCH Recipe System	–	o	o	o	o[4]
SIMATIC BATCH API[6]	o	o	o	o	–
Quantity options: Cumulative objects[6]					
• SIMATIC BATCH UNITs[5]					
- 1 UNIT	o	o	o	o	–
- 10 UNITs	o	o	o	o	–
- 50 UNITs	o	o	o	o	–
• SIMATIC BATCH OS Control Web Client					
- 1 Web client	o	o	o	o	–
- 5 Web clients	o	o	o	o	–
• Server Expansion Pack					
- 500 MB	o	o	o	o	–

SIMATIC BATCH software products/licenses for BATCH single station, BATCH server and BATCH client

1) SIMATIC BATCH Single Station Package License includes the server, client and recipe system functionalities. However, these cannot be extracted as individual licenses and distributed over multiple computers.
2) Alternative BATCH server software: SIMATIC BATCH Server with full functionality or SIMATIC BATCH Basic with reduced range of functions.
3) A SIMATIC BATCH Client License is needed for the BATCH Control Center (BatchCC) and for the BATCH OS Controls. If both BatchCC and the BATCH OS Control are being used on a PC, only 1 SIMATIC BATCH Client License has to be installed.
4) A client/server system is required on at least one client.
5) Instances of units; at least one SIMATIC BATCH UNIT License is required per project.
6) In a redundant configuration, the licenses must be installed on both servers.

● Software product/license required
o Software product/license optional
– Software product/license not required or not available

© Siemens AG 2024

Function

Recipe editor

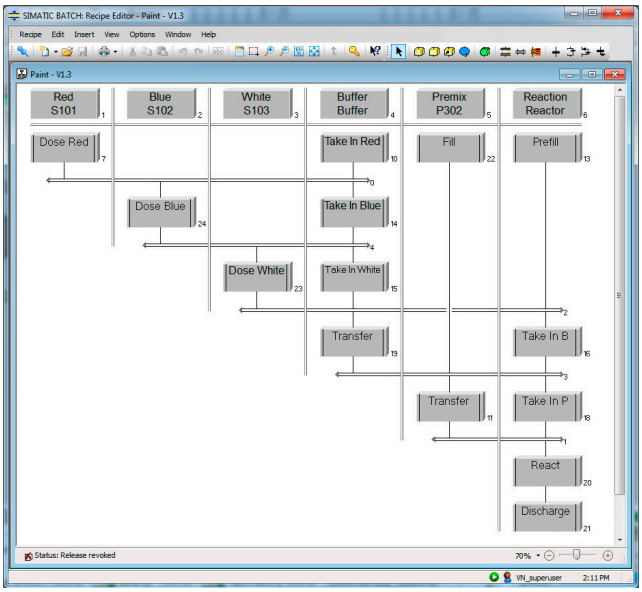

The recipe editor is integrated in the SIMATIC BATCH Single Station Package and can be installed as a functional expansion component of the SIMATIC BATCH Recipe System on a batch client and batch server.

It is used for easy, intuitive creation and modification of master recipes and library operations. The basis for recipe creation are the batch objects created from the plant configuration using the SIMATIC PCS 7 Engineering System, e.g. units and equipment phases.

The Batch Recipe Editor can be started individually, but can also be launched from the Batch Control Center (BatchCC). It possesses a GUI, processing functions typical to Microsoft Windows for individual and grouped objects, and a structural syntax check.

The recipe editor offers powerful functions for the following tasks:

- Creation of new master recipes and library operations
- Definition of user interface in the project settings
- Modification of existing master recipes and library operations (changes in structure or parameters)
- Querying the states of recipe objects and process values in transition conditions
- Assignment of route control locations as transfer parameters (source, target, via) to the transport phases, in order to direct products of one batch to other units (local or external)
- Configuration of arithmetic expressions for calculating setpoints for transitions and recipe parameters from recipe variables and constants
- Documentation of master recipes and library operations
- Validation under inclusion of user-specific plausibility checks
- Selection of unit candidates via a class-based view or limitation of the equipment properties
- Releasing master recipes and library operations for test or production

Hierarchical recipes according to ISA-88.01

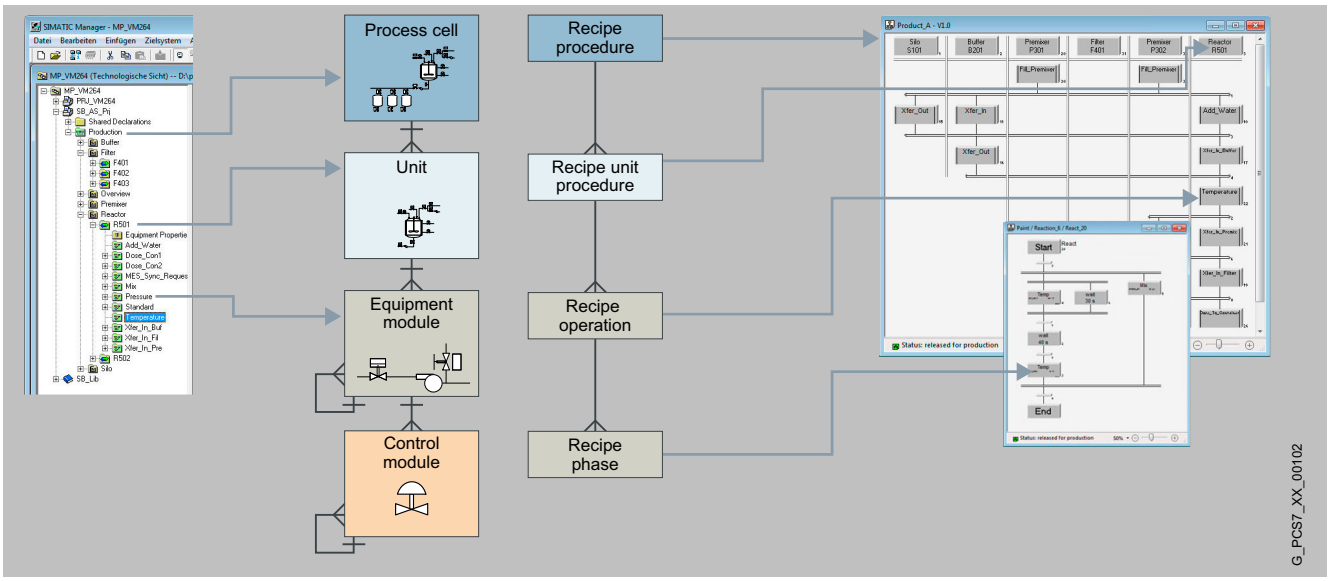

Hierarchical recipes according to ISA-88.01

SIMATIC BATCH supports hierarchical recipes in accordance with the ISA-88.01 standard. SIMATIC BATCH and SIMATIC PCS 7 form a functional unit that fully covers the models described in the standard.

The hierarchical recipe structure is mapped on the plant module as follows:

© Siemens AG 2024

Function (continued)

- Recipe procedure for controlling the process or the production in a plant
- Recipe unit procedure for controlling a process step in a plant unit
- Recipe operation/function for the process engineering task/function in an equipment module

Recipe elements for handling of exceptions

Monitoring of process states is possible during runtime by marking freely selectable recipe sections. It is then possible to automatically react to evaluated events or faults using a command block or jump function in a special container.

ROP Library

Recipe operations managed in a user library (ROP library) can be installed in the recipe procedures of hierarchical recipes as a reference and thus modified centrally.

This reduces the effort for engineering and validation. If the reference link is broken, the recipe operation becomes a fixed component of the recipe procedure, and is thus independent of further central modifications.

Separation Procedures/Formulas

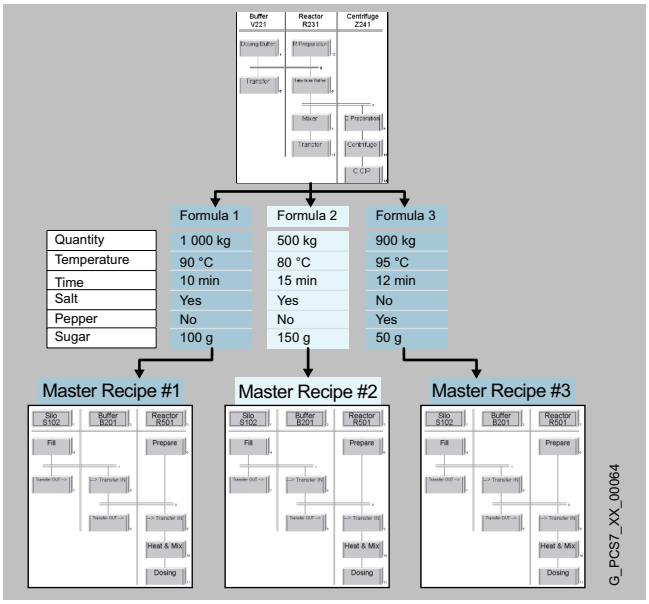

The flexibility achieved by recipes which are independent of specific units can be increased even further if the procedure and parameter sets (formulas) are separated from one another. Various master recipes can be created by linking several formulas using 1 recipe procedure. This enables central modification of procedures. The formula structure is determined by the formula category defined by the user.

Batch Control Center (BatchCC)

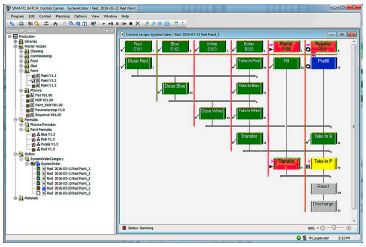

The SIMATIC BATCH Batch Control Center (BatchCC) is the "command center" for monitoring and controlling batch processes with SIMATIC BATCH. Using BatchCC you can manage all data relevant to SIMATIC BATCH through a graphical user interface.

BatchCC offers powerful functions for the following tasks:

- Import and update of basic automation plant data
- Definition of user privileges for all functions, for clients, or for plant units of SIMATIC BATCH
- Definition of material names and codes
- Management of master recipes
- Management of libraries with recipe elements (library operations)
- Editing of formula categories and management of associated formulas
- Creation of master recipes from control recipe
- Exporting and importing of master recipes, formulas and library objects
- Creation of batches with master recipes
- Starting of batch processing and controlling of batches
- Monitoring and diagnostics of batch processing
- Allocation strategy for recipe creation and unit allocation at batch runtime
- Online modification, deletion or insertion of objects (RPH, ROP, RUP) and structure elements (loops, transitions, etc.) of the recipe (special privileges and explicit authorization required)
- Recording and archiving of recipes and batch data
- Opening SFC visualization directly from the control recipe

Batch OS Control

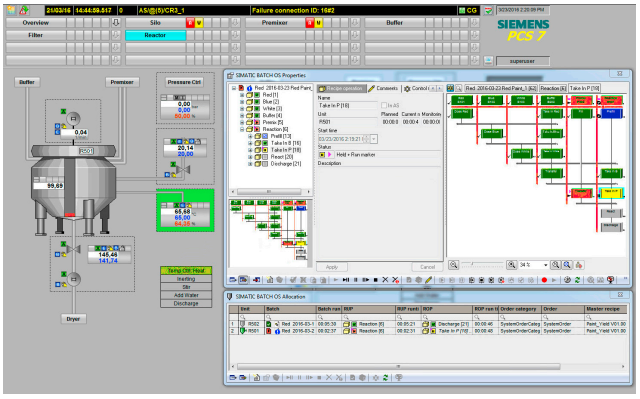

Batch OS Control

OS Controls which can be directly superimposed on the process display provide you with a practical alternative to BatchCC for the operation and monitoring of batch processes.

The following OS controls are available:

- Unit overview
- ROP overview
- Batch creation
- Job and batch overview

© Siemens AG 2024

Function (continued)

- Batch operation and monitoring

The BATCH OS controls are also web-supported, i.e. operator control and monitoring is possible on a PCS 7 Web Client.

Batch planning

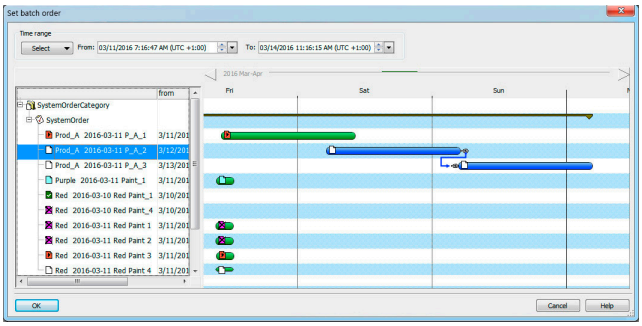

Batch Control Center enables the creation of individual production orders and batches. However, Batch Planning offers significantly more planning functions. The batches for a large number of production orders can then be planned in advance.

The functional scope not only includes planning, but also modification, cancellation, deletion and release of batches. Creation and distribution of the batches for a production order are possible manually, but can also be carried out automatically depending on the definition of the batch number or production quantity.

The following batch properties can be set and changed:

- Quantity
- Start mode (immediately, following operator input, or time-driven)
- Unit allocation
- Formula
- Run sequence (chaining to previous or subsequent batch)
- Displaying the runtime of a batch
- Definition of minimum time interval for batch chaining

Batch planning and control are supported in a user-friendly manner and simplified, thanks to special displays such as the order category list, production order list, batch planning list, batch status list, or batch results list.

All batches including their unit allocation can be clearly presented in a combination of Gantt diagram and table. Time conflicts or those resulting from multiple allocation of units are identified by symbols. Time conflicts can be eliminated simply by shifting the associated batches in the Gantt diagram.

SIMATIC Batch API

The SIMATIC BATCH API Application Programming Interface, which is offered as an expansion component, is an open interface for customer-specific extensions. It provides users with access to data and functions of SIMATIC BATCH and enables programming of special applications for specific sectors or projects.

© Siemens AG 2024

Selection and ordering data

Basic software for Batch Single Station, Batch Server and Batch Client	
Runs with the following operating systems (see SIMATIC PCS 7 V10.0 Readme for the latest information[1]): • Windows 10 2019/2021 LTSC • Windows Server 2019/2022 Standard Edition	
SIMATIC BATCH Single Station Package V10.0 6 languages (English, German, French, Italian, Spanish, Chinese), software class A, single license for 1 installation Without SIMATIC PCS 7 Software Media Package	
• Goods delivery License key on USB flash drive, Certificate of License	6ES7657-0UX78-0YB0
• Online delivery License key download, online Certificate of License : Email address required!	6ES7657-0UX78-0YH0
SIMATIC BATCH Basic V10.0 Batch server software with reduced functionality 6 languages (English, German, French, Italian, Spanish, Chinese), software class A, single license for 1 installation Without SIMATIC PCS 7 Software Media Package	
• Goods delivery License key on USB flash drive, Certificate of License	6ES7657-0YX78-0YB0
• Online delivery License key download, online Certificate of License : Email address required!	6ES7657-0YX78-0YH0
SIMATIC BATCH Server V10.0 6 languages (English, German, French, Italian, Spanish, Chinese), software class A, single license for 1 installation Without SIMATIC PCS 7 Software Media Package	
• Goods delivery License key on USB flash drive, Certificate of License	6ES7657-0TX78-0YB0
• Online delivery License key download, online Certificate of License : Email address required!	6ES7657-0TX78-0YH0
SIMATIC BATCH Client V10.0 6 languages (English, German, French, Italian, Spanish, Chinese), software class A, floating license for 1 user Without SIMATIC PCS 7 Software Media Package	
• Goods delivery License key on USB flash drive, Certificate of License	6ES7657-0VX78-0YB5
• Online delivery License key download, online Certificate of License : Email address required!	6ES7657-0VX78-0YH5

Selection and ordering data (continued)

Functional add-on components	
Runs with the following operating systems (see SIMATIC PCS 7 V10.0 Readme for latest information): • Windows 10 2019/2021 LTSC • Windows Server 2019/2022 Standard Edition	
SIMATIC BATCH Recipe System V10.0 For recipe creation; installation on at least one client of a client/server system (alone or in combination with the SIMATIC BATCH client software) 6 languages (English, German, French, Italian, Spanish, Chinese), software class A, floating license for 1 user Without SIMATIC PCS 7 Software Media Package	
• Goods delivery License key on USB flash drive, Certificate of License	6ES7657-0AX78-0YB5
• Online delivery License key download, online Certificate of License : Email address required!	6ES7657-0AX78-0YH5
SIMATIC BATCH API V10.0 1 language (English), software class A, single license for 1 installation Without SIMATIC PCS 7 Software Media Package	
• Goods delivery License key on USB flash drive, Certificate of License	6ES7657-0MX78-2YB0
• Online delivery License key download, online Certificate of License : Email address required!	6ES7657-0MX78-2YH0
Quantity options for Batch Single Station and Batch Server (cumulative)	
SIMATIC BATCH UNITs[2] For SIMATIC BATCH Single Station Package/SIMATIC BATCH Server software Language-neutral, software class A, single license for 1 installation Without SIMATIC PCS 7 Software Media Package	
• Goods delivery License key on USB flash drive, Certificate of License	
- 1 UNIT	6ES7657-0XA00-0YB0
- 10 UNITs	6ES7657-0XB00-0YB0
- 50 UNITs	6ES7657-0XC00-0YB0
• Online delivery License key download, online Certificate of License : Email address required!	
- 1 UNIT	6ES7657-0XA00-0YH0
- 10 UNITs	6ES7657-0XB00-0YH0
- 50 UNITs	6ES7657-0XC00-0YH0

© Siemens AG 2024

Selection and ordering data (continued)

SIMATIC BATCH OS Control Web Client For SIMATIC BATCH Single Station Package/SIMATIC BATCH Server software Language-neutral, software class A, single license for 1 installation Without SIMATIC PCS 7 Software Media Package	
• Goods delivery License key on USB flash drive, Certificate of License	
- 1 Web Client	**6ES7657-0XF00-0YB0**
- 5 Web Clients	**6ES7657-0XG00-0YB0**
• Online delivery License key download, online Certificate of License : Email address required!	
- 1 Web Client	**6ES7657-0XF00-0YH0**
- 5 Web Clients	**6ES7657-0XG00-0YH0**
SIMATIC BATCH Server Expansion Pack (500 MB) 6 languages (English, German, French, Italian, Spanish, Chinese), software class A, single license for 1 installation Without SIMATIC PCS 7 Software Media Package	
• Goods delivery License key on USB flash drive, Certificate of License	**6ES7657-0QX58-2YB0**
• Online delivery License key download, online Certificate of License : Email address required!	**6ES7657-0QX58-2YH0**

1) See "Software Media and Logistics" section, under "System documentation"
2) Instances of plant units

© Siemens AG 2024

9/2	**SIMATIC Route Control**
9/6	SIMATIC Route Control Runtime software
9/9	SIMATIC Route Control Engineering software

© Siemens AG 2024

Overview

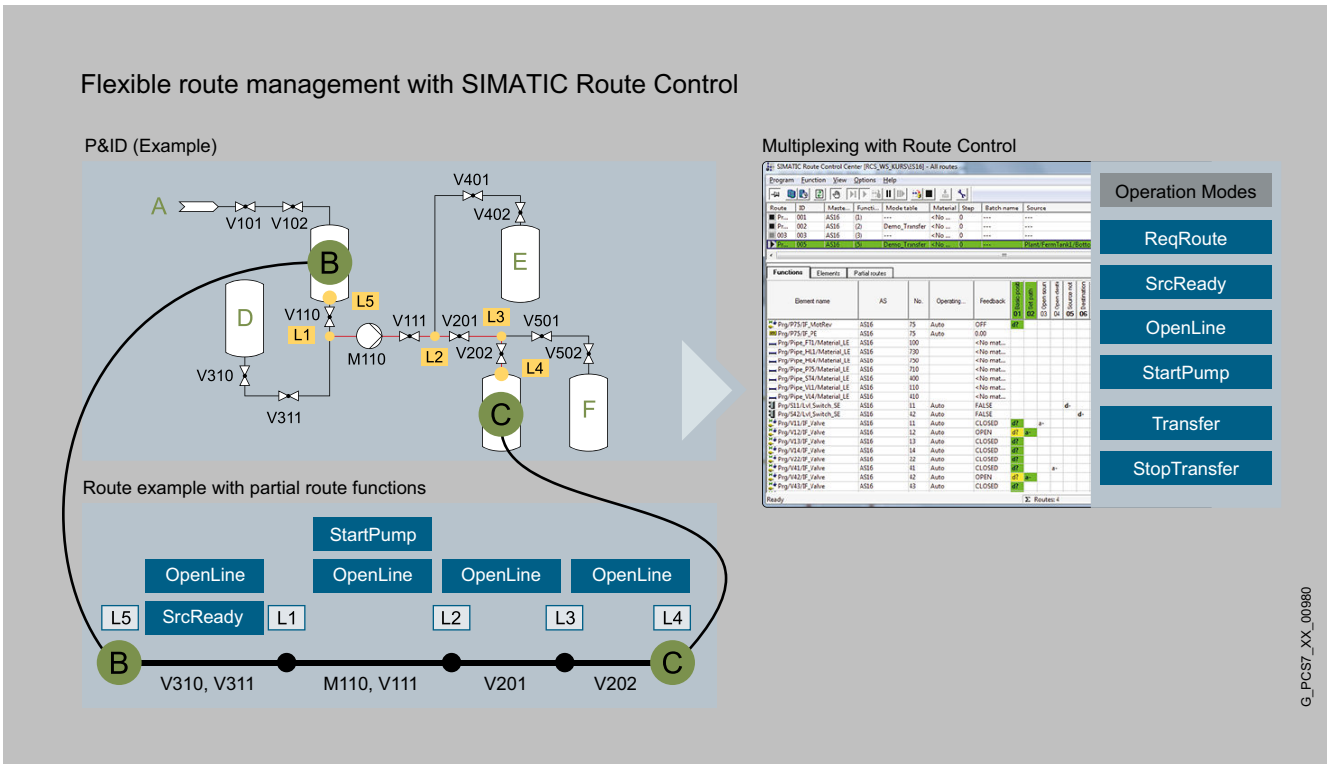

Management of route processes

With SIMATIC Route Control, the SIMATIC PCS 7 process control system offers an innovative and proven route management system at the same time. Due to its flexibility and scalability, SIMATIC Route Control can be used beneficially for almost any plant scale in a wide range of industries.

Using SIMATIC Route Control, engineering and planning offices as well as plant operators can significantly reduce project configuration and commissioning costs and at the same time increase configuration quality. Thanks to the flexible "multiplexing" capability of SIMATIC Route Control, plant expansions often no longer require new configuration. They can instead be configured during operation. Actuator control can be rescheduled and adapted during runtime. SIMATIC Route Control thus offers the highest degree of flexibility with unconditional assurance of plant safety.

SIMATIC Route Control can be profitably used for a wide range of applications. It significantly increases safe plant operation through automated, controlled actuator activation with simultaneous monitoring of interlocks, limits and material compatibility. The very easy-to-use operator interface of SIMATIC Route Control significantly reduces plant complexity for the plant operator and avoids operator errors. The optional redundancy of the Route Control Servers and the automation system-based control of routes ensure the high system availability required in many industries. The detailed documentation of operator interventions and the system activities enable full tracking of routing processes, which is especially required in validated environments.

© Siemens AG 2024

Application

SIMATIC Route Control can be profitably used for almost any plant size in a wide range of applications in the process industries.

SIMATIC Route Control shows its strengths in the following situations, among others:

- High plant safety combined with maximum flexibility for route control required.
- Operator errors should be specifically avoided by employing automatisms
- Frequent changes to the route network are necessary due to modifications or expansion, including the involved actuators and sensors
- Materials used are incompatible or change frequently
- Source and destination (including reversal of direction for bidirectional routes) should be able to be specified dynamically
- Routes are often controlled in parallel
- Plant projects are executed with SIMATIC BATCH

Design

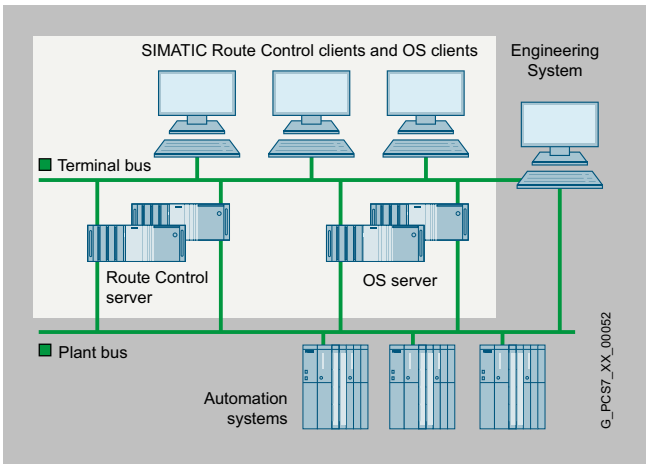

The modularity and flexibility of SIMATIC Route Control are optimally supported by the hardware available. The SIMATIC PCS 7 Industrial Workstations from the "Industrial Workstation/IPC" section can be used for SIMATIC Route Control.

Hardware for small plants

With small plants, SIMATIC Route Control Client and Server can be installed together with the OS software on a single-station system to save costs. You can select the hardware for this OS/RC single station from the section "Industrial Workstation/IPC", under "SIMATIC Rack PC".

Client/server configuration

In medium and large plants, the SIMATIC Route Control route management system is typically used as a distributed multi-station system with client-server architecture. Depending on the application, it is generally possible to operate SIMATIC Route Control Server, SIMATIC Batch Server and SIMATIC OS Server on common basic hardware. Taking into account the availability and performance requirements of the respective application, it must be decided whether separate server hardware must be provided for each component.

The availability of the RC Server can be increased further by a redundant design of the SIMATIC Route Control Server hardware. SIMATIC PCS 7 supports a SIMATIC Route Control Server or pair of SIMATIC Route Control Servers for each multi-user system.

The SIMATIC Route Control Client (RC Client) is represented by the SIMATIC Route Control Center (RCC). The RCC can be installed on a SIMATIC OS Client, a SIMATIC Batch Client or separate client hardware.

Increasing plant availability due to the use of redundant SIMATIC Route Control Servers

The SIMATIC Route Control Server software supports SIMATIC Route Control Server redundancy. Additional software components or separate connection between the two servers are not required.

With the assistance of the SIMATIC Route Control Server software, the two redundant SIMATIC Route Control Servers monitor each other during operation. If the active SIMATIC Route Control Server fails, the redundant partner takes over operation. In this case, the SIMATIC Route Control Clients are automatically switched to the new active SIMATIC Route Control Server. Once the failed SIMATIC Route Control Server has resumed operation, data is synchronized with the active SIMATIC Route Control Server.

© Siemens AG 2024

Design (continued)

Supported automation systems

SIMATIC Route Control supports standard automation systems, fault-tolerant and safety-related automation systems of the S7-400 range based on to the following CPU types:

- CPU 416 3 (parallel control of up to 30 routes)
- CPU 417-4 and CPU 417-4H (parallel control of up to 300 routes)
- CPU 410 5H (parallel control of up to 300 routes)
- PCS 7 BOX

Configuration

The SIMATIC PCS 7 Route Control system has a modular design and can be flexibly adapted to the respective application. In accordance with the growing demand of a plant, the required number of routes can be flexibly adapted using additional SIMATIC Route Control Routes software packages (10 and 50 route packages) up to the project upper limit of 300 routes.

The data managed by SIMATIC Route Control is protected against unauthorized access by a role/rights system. SIMATIC Logon as the central SIMATIC PCS 7 component for user management ensures optimum user administration.

SIMATIC Route Control Engineering – Individual interconnection of blocks no longer necessary

The central SIMATIC PCS 7 engineering system also provides SIMATIC Route Control Engineering in addition to other things. This includes the SIMATIC Route Control Library (for controlling route elements, etc.) and the SIMATIC Route Control Wizard for automated support of project configuration.

To control and monitor elements of a plant, blocks from a SIMATIC PCS 7 library are conventionally installed in CFCs in SIMATIC PCS 7 and interconnected with plant control blocks according to the technological requirements. Individual connection of the blocks is no longer necessary with SIMATIC Route Control (RC)! The standard blocks of the technological elements relevant for SIMATIC Route Control (RC elements) are adapted via uniform, reduced interface blocks of the SIMATIC Route Control Library. SIMATIC Route Control then takes of the control and monitoring of the elements.

The advantages of controlling and monitoring technological elements with SIMATIC Route Control are also possible in existing plants without increased work. Changes in the SIMATIC Route Control engineering project can be recorded and documented with a change log.

SIMATIC Route Control Runtime - Route management based on multiplexers

To control a route, the operator requests a route via SIMATIC Route Control Center, specifying source, destination and optional waypoints. Alternatively, the control of a route can also be automated (e.g. via SIMATIC Batch).

After successfully searching for a requested route, SIMATIC Route Control Server is ready to control the route. The control of a route takes place according to a defined function catalog, which contains the sequence and configuration of the control functions (control strategies). The SIMATIC Route Control Server (RC Server) supplies the SIMATIC Route Control Clients (Route Control Center) with the necessary data and transfers their operating information to the automation systems.

The detailed operating messages generated by SIMATIC Route Control allow all operating actions to be traced at any time (audit trail). SIMATIC Route Control can be used to request and safely perform maintenance work on automation systems. The automation systems involved can be specifically placed "in maintenance" (out of service). SIMATIC Route Control waits for the termination of active route controls for this.

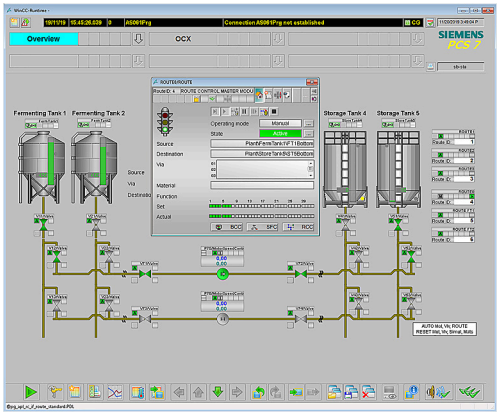

Route Control master module

© Siemens AG 2024

Configuration (continued)

SIMATIC Route Control block icons representing a specific route can be added to process pictures of SIMATIC PCS 7 operator stations. A SIMATIC Route Control block icon references a corresponding SIMATIC Route Control faceplate that displays detailed information about the route and allows the route to be operated.

© Siemens AG 2024

Overview

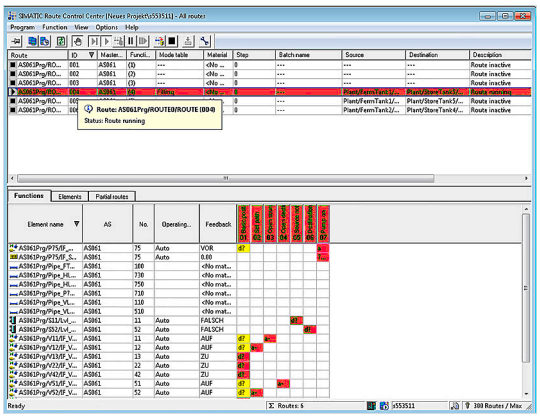

SIMATIC Route Control Center

Software components (runtime)	RC Single Station	RC Server single	RC Server redundant Server A	RC Server redundant Server B	RC Client
SIMATIC Route Control Server	●	●	●	●	–
SIMATIC Route Control Center	●	–	–	–	●
Quantity options: cumulative SIMATIC Route Control Routes[1)]					
• 10 routes[1)]	o	o	o	o	–
• 50 routes[1)]	o	o	o	o	–

SIMATIC Route Control software for RC Single Station, RC Server, and RC Client
1) Number of simultaneous material transports; at least one "SIMATIC Route Control Routes" license (for sets of 10/50) is required per project, total project limit: 300 routes
● Software product/license required
o Software product/license optional
– Software product/license not required or not available

Due to its software structure, SIMATIC Route Control can be flexibly adapted to different plant sizes and architectures (single-user/multi-user systems):

- SIMATIC Route Control Engineering (components of the SIMATIC PCS 7 Engineering System)
- SIMATIC Route Control Server
- SIMATIC Route Control Center (RCC)

SIMATIC Route Control and SIMATIC Operator System work together harmoniously and efficiently. For small plants, this makes it possible to install Route Control Center and Route Control Server together with SIMATIC Operator System software on a Single Station. The ordering data for the OS software can be found in the section "Operator System".

In the case of multiple station systems with low configuration limits, it is also possible to operate the SIMATIC Route Control Server, SIMATIC Batch Server and SIMATIC OS Server on shared basic hardware.

However, to further increase both the availability and the performance of the SIMATIC PCS 7 system, it is recommended to install the respective server software on separate server hardware.

The SIMATIC Route Control Center (RCC) can be installed on a SIMATIC OS Client, a SIMATIC Batch Client or on separate SIMATIC Route Control Client hardware.

In addition to the SIMATIC Route Control Server and SIMATIC Route Control Center runtime software, SIMATIC Route Control software packages that can be ordered separately are also required for a SIMATIC Route Control project, depending on the size of the plant. This software licenses the use of a certain number of routes (cumulative 10 and 50 quantity options for the number of simultaneously controlled routes). Several sets of 10 and 50 SIMATIC Route Control Routes licenses can be combined up to a total project limit of 300 routes.

© Siemens AG 2024

Function

SIMATIC Route Control Server

The SIMATIC Route Control Server supplies the Route Control Clients (faceplate or SIMATIC Route Control Center) with data and forwards operating information to the automation systems. When there is a requested route search, the SIMATIC Route Control Server has the task of finding an optimum route based on specified parameters (source, destination, waypoints) and taking into account other parameters (e.g. mode tables, function or material identifiers). Changes in the project configuration are made available to the SIMATIC Route Control Server by a simple loading and activation process and are then taken into account for new route searches.

Updating the Route Control Server configuration requires a comment from the user and triggers a corresponding WinCC message. This also contributes to safe plant operation and traceability of system modifications.

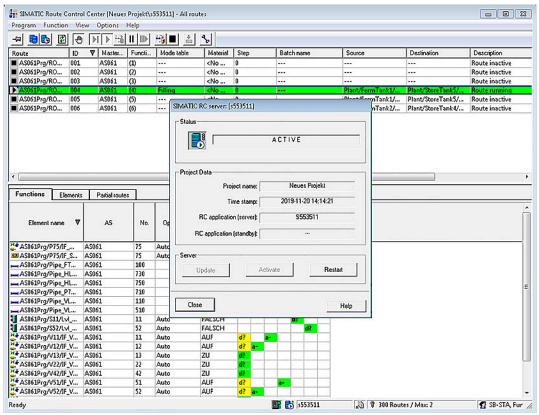

SIMATIC Route Control Server

SIMATIC Route Control Center (RCC)

The SIMATIC Route Control Center displays an overview of all routes known to the SIMATIC Route Control Server including all detailed information.

Key functional features are:

- Overview of all SIMATIC Route Control elements, partial routes and request details
- Configuration and operation of the routes:
  - Selection of operating mode: Manual/automatic
  - Request, start, stop, continue and terminate route in manual mode
  - Set/modify request parameters (origin, destination, intermediate points) as well as general properties (mode table, function ID, material ID and "ignore error") in manual mode
  - Enable/disable sequence functions in manual mode
- Extensive diagnostic options for route requests (e.g. detection of request errors due to blocked elements or blocked partial routes, detection of inconsistent actuations or prohibited follow-up materials)
- Extensive diagnostics of ongoing material transports (e.g. color and textual status display of routes; detailed analyses by evaluating feedback from SIMATIC Route Control elements)
- Operation of server functions (e.g. selecting SIMATIC Route Control Server, displaying its status and re-reading data)
- Display of operator who has logged on
- Definition of route parameters (source, destination, material, function ID etc.), and saving and loading these settings
- Management of the maintenance function for automation systems

© Siemens AG 2024

Selection and ordering data

SIMATIC Route Control Server V10.0 for single station or client/server configuration 6 languages (English, German, French, Italian, Spanish, Chinese), software class A Runs with Windows 10 Enterprise 2019/2021 LTSC or Windows Server 2019/2022 Standard Edition 64-bit (see SIMATIC PCS 7 V10.0 Readme for more information[1]) Single license for 1 installation, without SIMATIC PCS 7 Software Media Package	
• Goods delivery License key on USB flash drive, Certificate of License	**6ES7658-7FX78-0YB0**
• Online delivery License key download, online Certificate of License : Email address required!	**6ES7658-7FX78-0YH0**
Quantity options for single station/server (cumulative)	
SIMATIC Route Control Routes[2] For expansion of the SIMATIC Route Control Server software for single station or client/server configuration, cumulative Language-neutral, software class A, single license for 1 installation Without SIMATIC PCS 7 Software Media Package	
• Goods delivery License key on USB flash drive, Certificate of License	
- 10 routes[2]	**6ES7658-7FF00-0XB0**
- 50 routes[2]	**6ES7658-7FG00-0XB0**
• Online delivery License key download, online Certificate of License : Email address required!	
- 10 routes[2]	**6ES7658-7FF00-0XH0**
- 50 routes[2]	**6ES7658-7FG00-0XH0**
SIMATIC Route Control Center V10.0 6 languages (English, German, French, Italian, Spanish, Chinese), software class A Runs with Windows 10 Enterprise 2019/2021 LTSC or Windows Server 2019/2022 Standard Edition 64-bit (see SIMATIC PCS 7 V10.0 Readme for more information[1]) Floating license for 1 user, without SIMATIC PCS 7 Software Media Package	
• Goods delivery License key on USB flash drive, Certificate of License	**6ES7658-7EX78-0YB5**
• Online delivery License key download, online Certificate of License : Email address required!	**6ES7658-7EX78-0YH5**

1) See "Software Media and Logistics" section, under "System documentation"
2) Number of simultaneous material transports; total project limit: 300 routes

© Siemens AG 2024

Overview

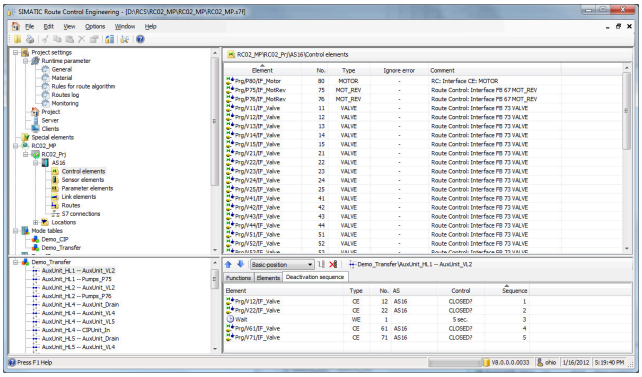

SIMATIC Route Control Engineering

With SIMATIC Route Control Engineering, SIMATIC PCS 7 plant engineering is extended by adapting technological elements relevant for SIMATIC Route Control. This adaptation is a standardized process requiring little effort. This procedure also enables the uncomplicated extension of existing plants.

The adaptation is performed using the CFC Editor using standardized interface blocks from the SIMATIC Route Control Library.

© Siemens AG 2024

Function

In addition to the basic tools of the SIMATIC PCS 7 Engineering System (SIMATIC Manager, CFC, etc.), the following components from the SIMATIC Route Control Engineering software package are available for configuring SIMATIC Route Control applications:

SIMATIC Route Control Library

The SIMATIC Route Control Library contains blocks for configuring the SIMATIC Route Control system and for route representation and adaptation of the route elements. It is provided in the catalog of the CFC editor.

SIMATIC Route Control Wizard

The SIMATIC Route Control Wizard supports and simplifies the SIMATIC Route Control engineering process. It automatically recognizes the configuration data of the SIMATIC PCS 7 project specific to SIMATIC Route Control and prepares it for SIMATIC Route Control engineering. In addition to incoming plausibility checks, it defines the communication links between AS-OS and AS-AS (NetPro and CFC) and configures the SIMATIC Route Control Server messages, for example.

SIMATIC Route Control Engineering – Configuration of the route management

SIMATIC Route Control Engineering is used to configure the objects relevant for the route management system. This process takes place after data preparation by the SIMATIC Route Control Wizard.

The following objects are relevant here:

- Partial routes:

  Routes are made up of partial routes. Partial routes provide specific information for the route search (e.g. flow direction, priority) and at the same time increase the flexibility of the route search.

- Interconnections:

  The term "interconnection" refers to the installation of a SIMATIC Route Control element in a partial route. Through this process, SIMATIC Route Control elements receive functions or properties of the partial route (e.g. in the initial state: "close valve").

- Function catalogs:

  A function catalog is a grouping of several related control strategies (also referred to as function levels) - e.g. "Cleaning", "Sterilization" or "Material transfer". The partial routes can be assigned to function catalogs according to technological and product-specific aspects. Function catalogs serve as search criteria for route searches, for example.

- Function stages:

  Function catalogs can contain up to 32 function levels (control strategies). The function levels are used to determine the control of the SIMATIC Route Control connected in partial routes (e.g. basic position of the control elements, open source valve, switch on pump).

The configuration of partial routes, function catalogs and function levels is performed using a user-friendly matrix.

Graphical offline route search

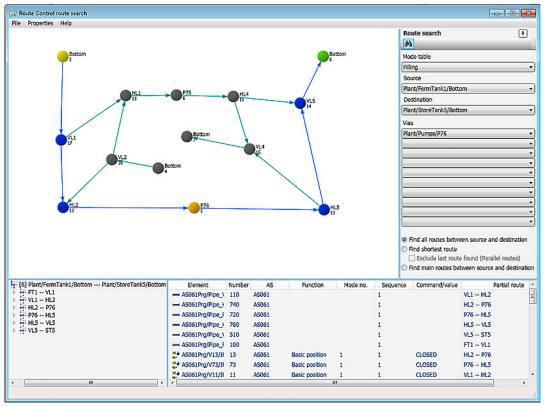

Graphical offline route search for checking the route network

A route search independent of the runtime system is possible with SIMATIC Route Control Engineering. Comparable to a navigation system, the graphically visualized offline route search determines possible route options.

Errors in the route network can be detected already during the engineering phase. According to the preferences, a preferred route can be selected from the offline route search results and saved as a static route.

© Siemens AG 2024

Selection and ordering data

SIMATIC Route Control Engineering V10.0 6 languages (English, German, French, Italian, Spanish, Chinese), software class A Runs with Windows 10 Enterprise 2019/2021 LTSC or Windows Server 2019/2022 Standard Edition 64-bit (see SIMATIC PCS 7 V10.0 Readme for the latest information[1]) Floating license for 1 user, without SIMATIC PCS 7 Software Media Package	
• Goods delivery License key on USB flash drive, Certificate of License	**6ES7658-7DX78-0YB5**
• Online delivery License key download, online Certificate of License : Email address required!	**6ES7658-7DX78-0YH5**

[1] See "Software Media and Logistics" section, under "System documentation"

© Siemens AG 2024

Safety Integrated for Process Automation

10

10/2	**Introduction**
10/5	**SIMATIC Safety Integrated**
10/6	SIMATIC S7 F Systems
10/8	SIMATIC S7 Safety Matrix
10/13	**Functional Safety Services**

© Siemens AG 2024

Overview

Safety Integrated for Process Automation is the comprehensive range of products and services from Siemens for safe, fault-tolerant applications in the process industry. This is characterized by:

- Safety-related F/FH automation systems of the S7-400 series (see "Automation Systems" section)
- Safe communication with the PROFIsafe profile via PROFIBUS (see section "Industrial Communication, PROFIBUS") or PROFINET (see section "Industrial Communication, PROFINET")
- Fail-safe transmitters (SITRANS P DS III) on the PROFIBUS PA with PROFIsafe (see Catalog FI 01, Field devices for process automation)
- ET 200SP HA, ET 200iSP and ET 200M distributed I/O systems with safety-related F-I/O modules/submodules (see "Process I/O" section)
- Fail-safe process instruments/devices for connection to ET 200 distributed I/O systems (see Catalog FI 01, Field Instruments for Process Automation)
- SIMATIC Safety Integrated software for implementation and operation of safety applications, with additional components for the Engineering System and the operator stations: SIMATIC S7 F systems, SIMATIC S7 Safety Matrix
- Special applications, for example, Partial Stroke Test
- Safety Lifecycle Management with support by highly qualified solution partners: services for all phases in the lifecycle of a safety instrumented system (analysis, implementation, and operation)

Benefits

Safety Integrated for Process Automation enables full integration of safety technology in the SIMATIC PCS 7 process control system. The Basic Process Control System (BPCS) and Safety Instrumented System (SIS) combine seamlessly to form a uniform and innovative complete system. The advantages of this fusion are quite clear:

- One common controller platform
- One common engineering system
- No separate safety bus – standard and safety-related communication take place on the same fieldbus (PROFIBUS/PROFINET with PROFIsafe)
- Mixed operation of standard and safety-related I/O modules in SIMATIC ET 200SP HA, SIMATIC ET 200iSP and SIMATIC ET 200M remote I/O stations
- Integrated data management – no complex data exchange between BPCS and SIS
- Integration of safety-related applications into process visualization on the operator station
- Automatic integration of safety-related fault messages with time stamping into the process control system
- Integration of safety-related hardware into the asset management with the SIMATIC PCS 7 Maintenance Station for diagnostics and preventive maintenance

© Siemens AG 2024

Design

The PROFIsafe profile allows safety-related communication between the automation system (controller) and the process I/O via either PROFIBUS or PROFINET. The decision for choosing either PROFINET IO or the PROFIBUS DP/PA fieldbuses has a significant influence on the architecture of the safety-related system.

Safety-related design versions with PROFIBUS

In the case of a safety-related system with PROFIBUS communication integrated into SIMATIC PCS 7, a distinction is made across all architecture levels between two design versions:

- Single-channel, non-redundant design
- Redundant, fault-tolerant design

Both design versions are extremely variable, and offer a large scope for different customer requirements. Standard automation (basic process control) and safety-related functions can be combined flexibly, not only in the area of distributed I/O. Even at the controller level, they can be combined in one system or separated. In addition, there are numerous possibilities arising from the use of flexible modular redundancy.

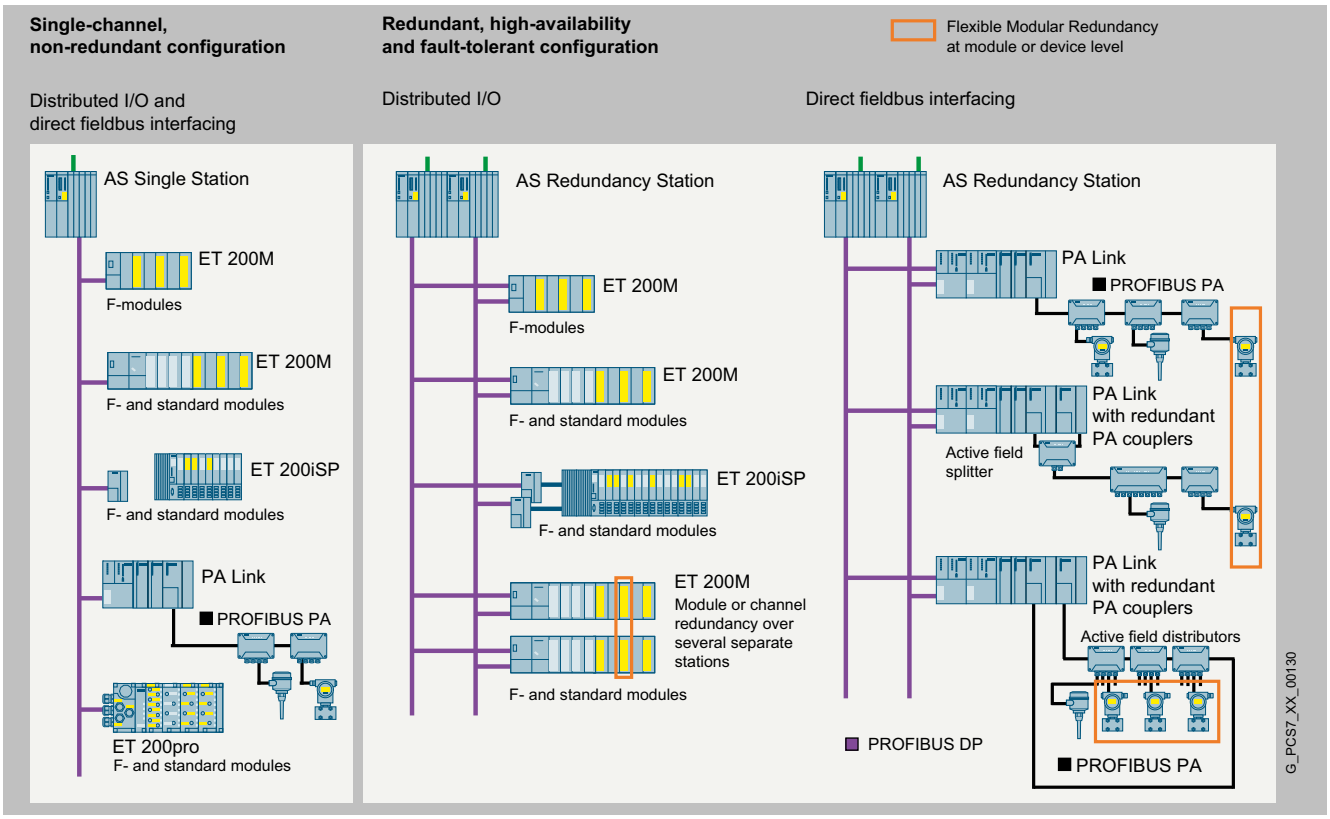

Safety-related design versions with PROFIBUS

At the individual architecture levels (controller, fieldbus, I/O), you have the configuration alternatives shown in the figure in line with the I/O used (ET 200SP HA, ET 200iSP, ET 200M remote I/O stations or PROFIBUS PA devices with PA profile 3.0 or higher).

Safety-related design versions with PROFINET

Safety-related AS single stations (F systems) and AS redundancy stations (FH systems) from the S7-400 series can be networked simply and effectively with remote I/O stations via PROFINET IO. For this purpose, the PN/IE interface integrated in the CPU and the corresponding PROFINET interface module in the remote I/O stations (e.g. IM 155-6 PN HA for ET 200SP HA) are available on the automation system side.

The availability of the I/O devices on an AS Single Station (F-system) can be increased by a ring topology with media redundancy. If the transmission link in the ring is interrupted at one point, for example, due to a break in the ring cable or the failure of a station, the redundancy manager then immediately activates the alternative communication path.

© Siemens AG 2024

Design (continued)

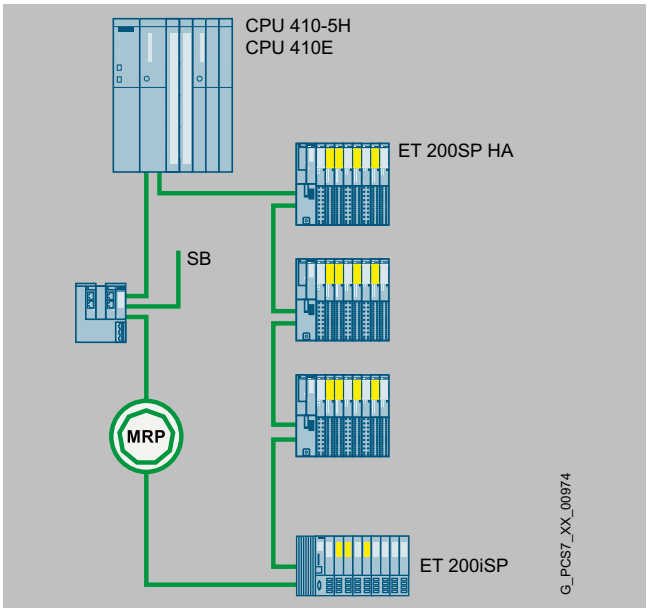

Safety-related PROFINET IO communication with media redundancy

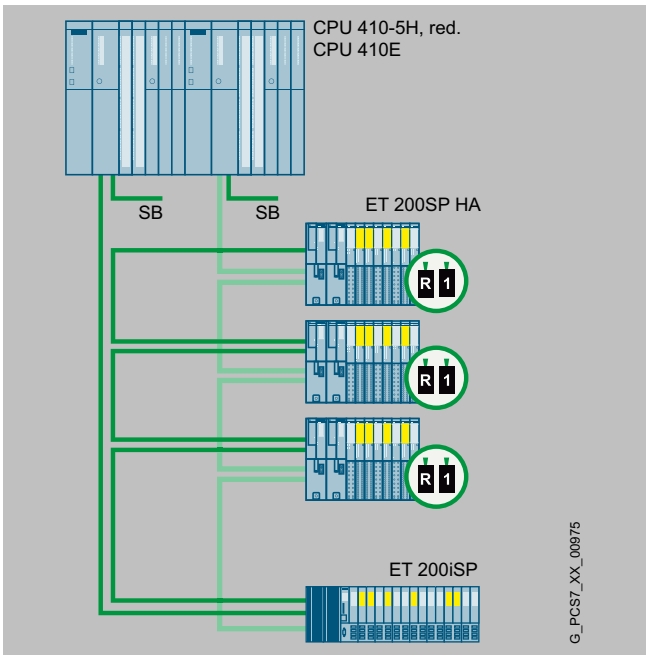

Safety-related PROFINET IO communication with system redundancy

The maximum availability with minimum fault reaction times is achieved by the AS Redundancy Station (FH system) in conjunction with the redundant PROFINET configuration R1. From the CPUs of the H system onwards, the R1 devices are connected via two separate line structures. In order to increase availability, we recommend reverse cabling (as shown in the blueprint). In contrast to the single-sided I/O device connection to only one CPU, failure of a CPU in this case does not automatically lead to failure of the connected I/O devices.

© Siemens AG 2024

Overview

Together with the SIMATIC S7 F Systems and SIMATIC Safety Matrix software, SIMATIC Safety Integrated supports the implementation and operation of safety applications for process automation.

Using the SIMATIC S7 F Systems engineering tool, you can configure the safety-related F/FH automation systems of the S7-400 series as well as the safety-related F-modules from the ET 200 range.

You can also configure the safety-related applications simply, efficiently and without any time-consuming familiarization using continuous function charts (CFC) and pre-defined function blocks from the F-block library of the SIMATIC S7 F systems. However, this is even simpler, more convenient and faster using the Safety Matrix Tool based on CFC. This tool works according to the principle of a Cause&Effect matrix. Once you have defined reactions (effects) to all events (causes) occurring during a process, the tool automatically produces complex safety programs.

The Safety Matrix Viewer allows you to operate and monitor the SIMATIC Safety Matrix from the SIMATIC PCS 7 OS single station or from the SIMATIC PCS 7 OS client.

© Siemens AG 2024

Overview

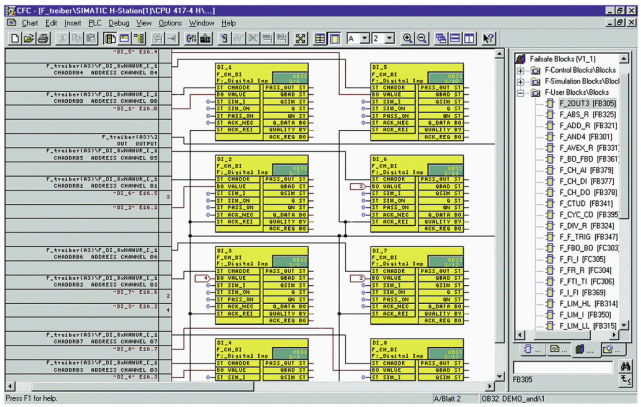

The SIMATIC S7 F Systems engineering tool for configuration of safety-related SIMATIC PCS 7 automation systems and safety-related F-modules from the ET 200 range is integrated in the SIMATIC Manager. SIMATIC S7 F Systems are based on pre-configured and German Technical Inspectorate certified blocks. The following functions are then available:

- Parameterization of CPU and F signal modules
- Creation of safety-related applications in the CFC

Design

Information on ordering and delivery

Installation software for the SIMATIC S7 F Systems is provided in the form of a software media package. Software media packages and product-specific software licenses are separate packages, which are not merged into a single package item for a goods delivery.

The number of delivered software media packages can be determined by the number of ordered items. You can find more information under "Goods delivery" in the "Software Media and Logistics" section, subsection "PCS 7 software packages" of the Catalog ST PCS 7.

Configuration

SIMATIC S7 F Systems supports configuration using functions for:

- Comparison of safety-related F programs
- Recognition of changes in the F program using the checksum
- Separation of safety-related and standard functions.

Access to the F functions can be password-protected.

The F block library integrated in SIMATIC S7 F Systems contains predefined function blocks for generating safety-related applications with the CFC or the CFC-based SIMATIC S7 Safety Matrix. The certified F blocks are extremely robust and intercept programming errors such as division by zero or out-of-range values. They avoid the need for diverse programming tasks for detecting and reacting to errors.

Note:

The SIMATIC S7 F Systems RT license for processing safety-related user programs in the controller is already integrated in the "AS bundles" of the safety-related automation systems. The article number for ordering further licenses can be found in the section "Automation systems" under "AS 410 modular systems", "Safety-related automation systems" and under "Complementary S7-400 systems".

Selection and ordering data

SIMATIC S7 F Systems	
SIMATIC S7 F Systems V6.4 Programming and configuration environment for creating and using safety-oriented STEP 7 programs 2 languages (English, German), software class A Runs on the following operating systems • Windows 10 Enterprise 2015 LTSB (64-bit), Windows 10 Enterprise 2019 LTSC 64-bit, Windows Server 2016 Standard Edition 64-bit, Windows Server 2016 Datacenter Edition 64-bit, Windows Server 2019 Standard Edition 64-bit, Windows Server 2019 Datacenter Edition 64-bit Floating license for 1 user, without SIMATIC PCS 7 Software Media Package	
• Goods delivery License key on USB flash drive and Certificate of License, bundled with 1 × SIMATIC S7 F Systems Software Media Package per order item	**6ES7833-1CC46-0YA5**
• Online delivery License key download and online Certificate of License combined with SIMATIC S7 F Systems Software Media Package (software download and online Certificate of License) : Email address required	**6ES7833-1CC46-0YH5**
SIMATIC S7 F Systems Software Media Package	
SIMATIC S7 F Systems Software Media Package V6.4 Installation software without license 2 languages (English, German), software class A Runs on the following operating systems: • Windows 10 Enterprise 2015 LTSB 64-bit, Windows 10 Enterprise 2019 LTSC 64-bit, Windows Server 2016 Standard Edition 64-bit, Windows Server 2016 Datacenter Edition 64-bit, Windows Server 2019 Standard Edition 64-bit, Windows Server 2019 Datacenter Edition 64-bit Without SIMATIC PCS 7 Software Media Package Note: Can only be used in conjunction with a valid license.	
• Goods delivery Software on DVD and Certificate of License	**6ES7833-4CC46-0YT8**
• Online delivery Software download and online Certificate of License : Email address required!	**6ES7833-4CC46-0YG8**

© Siemens AG 2024

Selection and ordering data (continued)

Upgrades for SIMATIC S7 F Systems See "Upgrades for Safety Integrated for Process Automation" in section "Update/upgrade packages", "Updates/upgrades asynchronous to the PCS 7 version". Note: With a SIMATIC S7 F Systems Upgrade from V5.x to V6.x, the type of SIMATIC S7 F Systems License changes from single license to floating license.	

© Siemens AG 2024

Overview

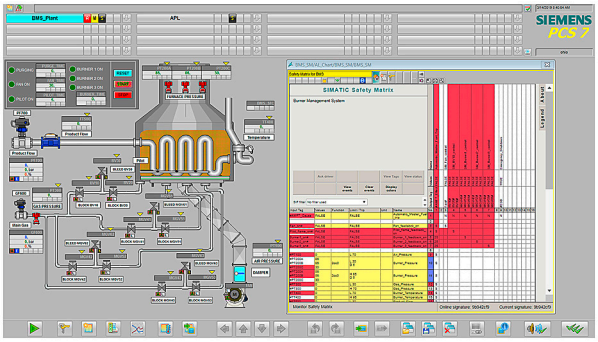

Process image of an operator station with the SIMATIC S7 Safety Matrix Viewer displayed

The SIMATIC S7 Safety Matrix, which can be used in addition to the CFC, is an innovative safety lifecycle tool from Siemens that can be used not only for user-friendly configuration of safety applications, but also for their operation and service. The tool, which is based on the proven principle of a cause & effect matrix, is ideally suited to processes where defined states require specific safety reactions.

The SIMATIC S7 Safety Matrix means that programming of the safety logic is not only significantly simpler and more convenient, but also much faster than conventional processes. During the risk analysis of a plant, the configuration engineer can assign precisely defined reactions (effects) to events (causes) which may occur during a process.

© Siemens AG 2024

Benefits

Advantages of the SIMATIC S7 Safety Matrix in the implementation and operation phase

Implementation phase

- Direct further processing of safety specification possible
- Simple programming with the cause & effect method
- No programming knowledge required
- Preprocessing of input values
- Alarm generation and provision of diagnostic information for each individual cause & effect
- Prealarm for analog values
- Free color selection for alarms and messages
- Automatic generation of CFCs including driver blocks
- Matrix comparison on basis of created CFC charts
- Automatic version tracking
- integrated change tracking
- 1-to-1 expression of the cause & effect matrix

Operating phase

- Complete integration in SIMATIC PCS 7
- All relevant information can be seen at a glance in the template
- Cause & effect-dependent matrix and alarm display
- Tag display in the alarm
- Sequence of event display and saving
- First-up alarm display and saving
- Integral operating functions such as reset, override, and parameter modification
- Automatic saving of operating interventions for the safety life-cycle management
- Integral maintenance functions such as bypass and simulation
- Display of all relevant process values, also during maintenance
- Automatic version tracking
- Automatic documentation of modifications

Design

In the context of SIMATIC PCS 7, the following individual products are offered for the SIMATIC S7 Safety Matrix:

SIMATIC S7 Safety Matrix Tool

Designed for the SIMATIC PCS 7 Engineering System; for creating, configuring and compiling the SIMATIC S7 Safety Matrix, as well as for loading and operator control and monitoring of the safety-related CFC program.

The application covers the complete safety lifecycle, from analysis through implementation up to operation and maintenance.

SIMATIC S7 Safety Matrix Viewer

For the SIMATIC PCS 7 Operator System; for operator control and monitoring of the SIMATIC S7 Safety Matrix in the operating phase.

The SIMATIC S7 Safety Matrix Viewer can be installed on the SIMATIC PCS 7 Operator Station, Single Station or Client version to allow simple and intuitive operation and monitoring of the safety application during operation.

Information on ordering and delivery

Installation software for the SIMATIC S7 Safety Matrix is provided in the form of a software media package. Software media packages and product-specific software licenses are separate packages, which are not merged into a single package item for a goods delivery.

The number of delivered software media packages can be determined by the number of ordered items. You can find more information under "Goods delivery" in the "Software Media and Logistics" section, subsection "PCS 7 software packages" of the Catalog ST PCS 7.

© Siemens AG 2024

Function

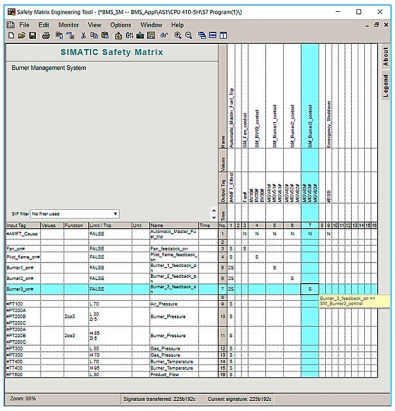

SIMATIC S7 Safety Matrix: intersections define the linking of causes and effects

The matrix table is comparable with a spreadsheet program, and the project engineer first enters the possible process events (inputs) in the horizontal lines, and then configures their type and number, logical links, possible delays and interlocks, and any tolerable faults. The reactions (outputs) to a particular event are then defined in the vertical columns.

The events and reactions are linked by simply clicking the cell at the intersection of the row and column. Using these data, the SIMATIC S7 Safety Matrix automatically generates complex, safety-related CFC programs. The project engineer requires no special programming skills and can completely concentrate on the safety requirements of the plant.

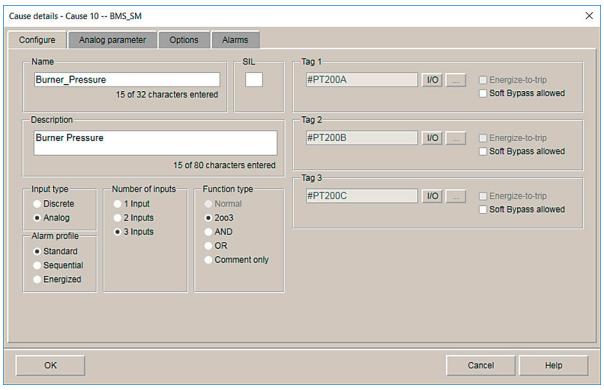

Input window for configuration of analog "causes" with process value preprocessing

Each input value can be combined with a freely configurable preprocessing if necessary without giving up the simulation option.

The alarm management is supported by collective alarms, alarm prioritization and individually adjustable acknowledgement.

In addition to the alarms derived from process values, alarms can also be generated and diagnostics information can be provided for each individual cause and effect. Priorities and response behavior can be defined in various profiles here. The color scheme for the alarms and messages can be adapted on a customer- or country-specific basis.

For the Safety Life-cycle Management, functions are integrated for the version management and for the documentation of program changes and operator interventions.

Function (continued)

During plant operation, the operator has direct access to the relevant data with the viewer of the SIMATIC S7 Safety Matrix. From the overall view it can change directly to cause or effect related detailed views and return from there. In the detailed views, alarm indications corresponding with the respective cause or effect can be called up.

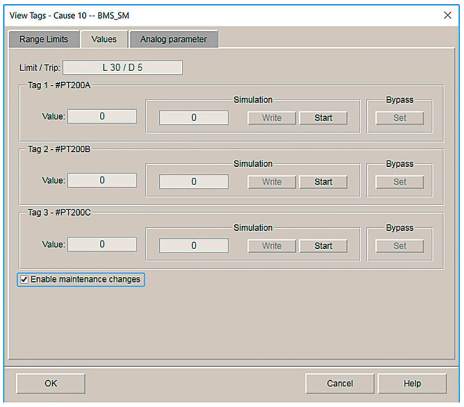

Tag display in online mode with process value, simulation value and active value

The signal status is indicated online in the Cause & Effect matrix. The process value, simulation value and active value are indicated on the tag display in each case.

The SIMATIC S7 Safety Matrix viewer enables the operator to display and save initial messages, as well as to record safety-relevant events. Changes in parameters are supported, as are bypass, reset and override functions.

© Siemens AG 2024

Selection and ordering data

SIMATIC S7 Safety Matrix	
Runs with the following operating systems (see SIMATIC S7 Safety Matrix V6.3 Readme for the latest information): • MS Windows 7 Ultimate with SP1 (64-bit) • MS Windows 7 Enterprise with SP1 (64-bit) • MS Windows 7 Professional with SP1 (64-bit) • MS Windows 10 Enterprise 2015 LTSB • MS Windows 10 Enterprise 2019 LTSC (64-bit) • MS Windows Server 2008 R2 with SP1 (64-bit) • MS Windows Server 2012 R2 Standard • MS Windows Server 2016 Standard Edition (64-bit) • MS Windows Server 2016 Datacenter Edition (64-bit) • MS Windows Server 2019 Standard Edition (64-bit) • MS Windows Server 2019 Datacenter Edition (64-bit)	
SIMATIC S7 Safety Matrix Tool V6.3 Creation, configuration, compilation and loading of the SIMATIC S7 Safety Matrix as well as operator control and monitoring in a SIMATIC PCS 7 environment 2 languages (German, English), software class A, floating license for 1 user Without SIMATIC PCS 7 Software Media Package	
• Goods delivery License key on USB flash drive and Certificate of License, bundled with 1 × SIMATIC S7 Safety Matrix Software Media Package per order item	6ES7833-1SM03-0YA5
• Online delivery License key download and online Certificate of License, combined with SIMATIC S7 Safety Matrix Software Media Package (software download and online Certificate of License) : Email address required; installation software also available separately as SIMATIC S7 Safety Matrix Software Media Package.	6ES7833-1SM03-0YH5

Selection and ordering data (continued)

SIMATIC S7 Safety Matrix Viewer V6.3 For operator control and monitoring of the SIMATIC S7 Safety Matrix via OS Single Station/OS Client Runtime software, 2 languages (German, English), software class A, floating license for 1 user Without SIMATIC PCS 7 Software Media Package	
• Goods delivery License key on USB flash drive and Certificate of License, bundled with 1 × SIMATIC S7 Safety Matrix Software Media Package per order item	6ES7833-1SM63-0YA5
• Online delivery License key download and online Certificate of License, combined with SIMATIC S7 Safety Matrix Software Media Package (software download and online Certificate of License) : Email address required; installation software also available separately as SIMATIC S7 Safety Matrix Software Media Package.	6ES7833-1SM63-0YH5
SIMATIC S7 Safety Matrix Software Media Package	
SIMATIC S7 Safety Matrix Software Media Package V6.3 (incl. SP) Installation software without license, 2 languages (German, English), software class A Without SIMATIC PCS 7 Software Media Package Note: Can only be used in conjunction with a valid license.	
• Goods delivery Software on DVD and Certificate of License	6ES7833-4SM36-0YT8
• Online delivery Software download and online Certificate of License : Email address required!	6ES7833-4SM36-0YG8
Upgrades for SIMATIC S7 Safety Matrix Tool and SIMATIC S7 Safety Matrix Viewer See "Safety Integrated Upgrades for Process Automation", chapter "Update/upgrade packages", section "Updates/upgrades asynchronous to the PCS 7 version"	

© Siemens AG 2024

Technical specifications

	Safety lifecycle support	Operating modes	Hardware requirements	Software requirements
SIMATIC S7 Safety Matrix Tool V6.3	Complete lifecycle: • Analysis phase • Implementation phase • Operation and maintenance phase	Offline, online	SIMATIC PCS 7 with safety-related automation systems (SIMATIC S7 F Systems RT license integrated) Installation basis: SIMATIC PCS 7 Engineering Station	Microsoft Windows operating system (depending on the software requirements of the SIMATIC PCS 7 version) For offline testing: S7-PLCSIM or SIMIT SIMATIC S7 F systems as of V6.1 SP2
SIMATIC S7 Safety Matrix Viewer V6.3	Operating phase (operator control and monitoring)	Online	SIMATIC PCS 7 with safety-related automation systems (SIMATIC S7 F Systems RT license integrated) Installation basis: SIMATIC PCS 7 Operator Station, single station or client version	Microsoft Windows operating system (depending on the software requirements of the SIMATIC PCS 7 version)

System requirements for SIMATIC S7 Safety Matrix

© Siemens AG 2024

Overview

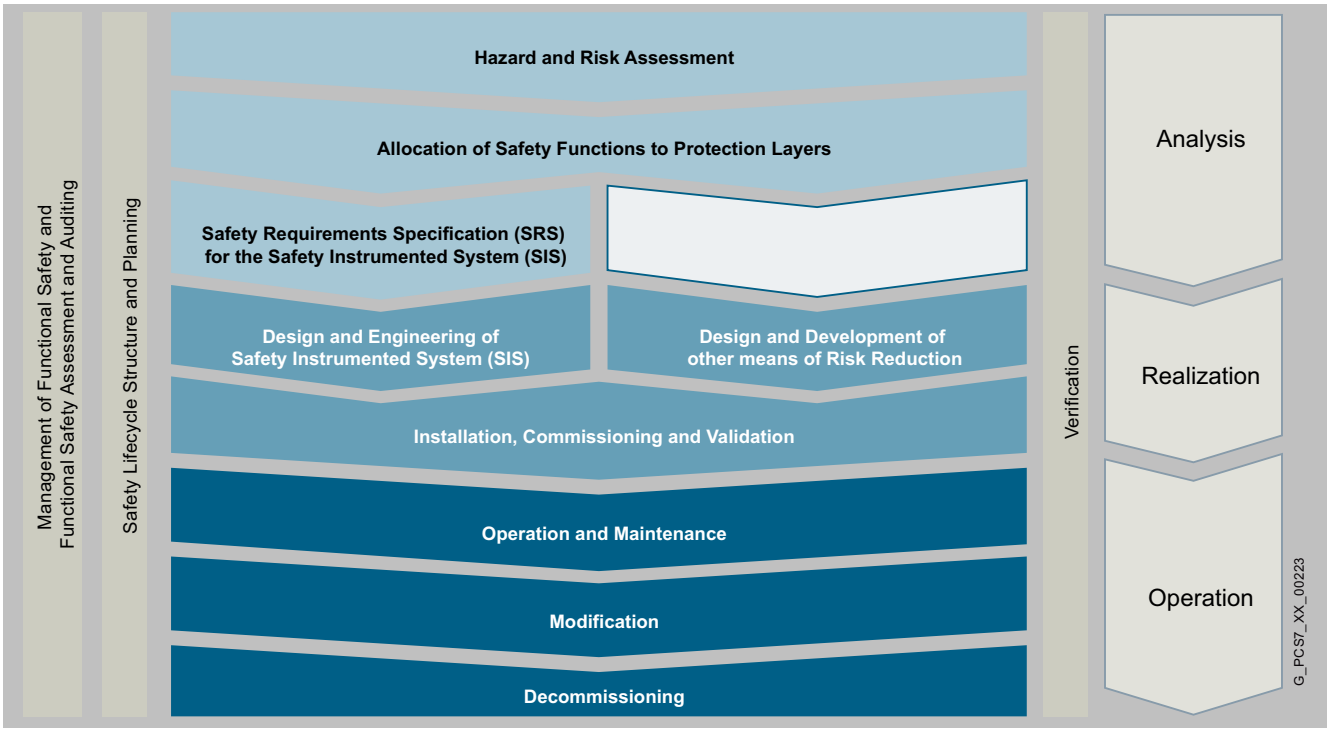

Simplified representation of the safety lifecycle (IEC 61511)

Safety lifecycle services for the process industry in accordance with IEC 61511

The area of functional safety covers much more than just the Installation SIL-certified hardware and software components. It requires expert knowledge, always aware of latest directives and technologies.

Plant operators, PLT protective devices for risk reduction - this includes operators of almost all chemical plants, refineries, distillation and combustion plants - must implement a system for management of functional safety. Operators are obliged to verify sufficient risk reduction.

In addition to the correct hardware and software, applied planning, operating, and change processes are decisive in ensuring that these systems effectively maintain their intended function throughout the complete life cycle of the plant.

The basis for these processes are:

- Safety Life Cycle (SLC)
- Safety Integrity Level (SIL)

The safety life cycle reflects the life cycle of process plants and is divided into separate phases: Risk analysis, specification of the safety requirements, planning, installation and commissioning, operation, change as well as decommissioning. Errors in the early stages of the project can often only be corrected later at great effort and cost. We systematically prevent errors in all project phases using our standardized engineering guidelines and verification templates.

Benefits

- Standardized processes for faster and safer project implementation and commissioning
- Uniform verification and validation documents
- Reduction of development time and costs through interdisciplinary team of experts with process and automation expertise
- Acceleration of the acceptance of plants by means of customized safety concepts

Application

- Plant operators that use PLT protective equipment to reduce risks - this includes the operators of almost all chemical plants, all refineries, distillation and combustion plants.
- SIMATIC PCS 7 plants with integrated safety technology using SIMATIC S7 F systems and the SIMATIC S7 Safety Matrix, and in which processing must be performed according to IEC 61511 or a specific safety integrity level (SIL).

© Siemens AG 2024

Design

Our service offer

- Management and evaluation of functional safety and audits
- Planning and configuration of the SLC (Safety Plan)
- Hazard and safety assessment
- Assignment of the safety functions to the protection levels
- Safety Requirement Specification (SRS)
- Verification and validation, e.g. SIL verification, hardware/software audit
- Modification (Management of Change)
- Training (see also SITRAIN Digital Industry Academy - SITRAIN, Siemens Training and IEC 61511 - Practical use (ST-WSPUP) - SITRAIN Germany, Siemens Training)

More information

Siemens AG
Engineering & Consulting
Team-ec.industry@siemens.com
Tel.: +49 (69) 797-84500
More information is available on the internet at:

© Siemens AG 2024

Industrial Security

11

11/2	Network Security
11/6	Industrial Cybersecurity Services
11/7	SIMATIC Logon

© Siemens AG 2024

Overview

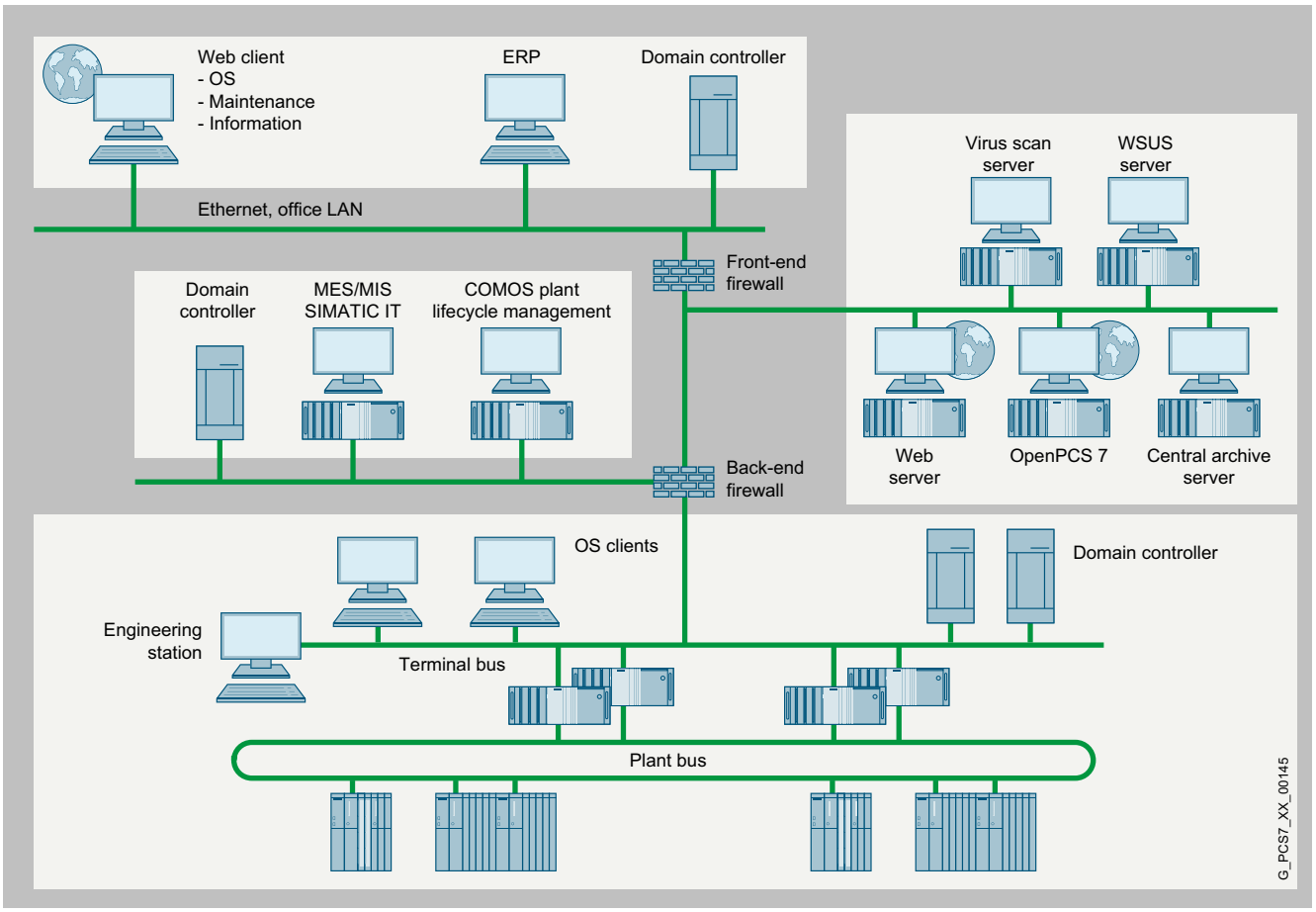

Example of a defense in depth security architecture

With advancing standardization, openness and networking, the security risks for process control systems have risen significantly. The danger potential arising from malicious programs such as computer viruses, worms and trojans or from access by unauthorized personnel ranges from network overloads or failures and theft of passwords and data to unauthorized interventions in the process automation. Apart from property damage, targeted sabotage can also have dangerous consequences for personnel and the environment.

With the security concept developed for SIMATIC PCS 7, you have comprehensive protection for your process control system against these various dangers. Siemens supports you with additional services as needed, including security assessment, security implementation and security management during operation (for details, see "Industrial Security Services" section).

SIMATIC PCS 7 security concept

The SIMATIC PCS 7 security concept, which is described in detail in the "PCS 7 Security Concept (Basic)" manual and in other documents, provides far-reaching recommendations (best practices) for safeguarding process plants based on a defense in depth security architecture. It is not restricted to the use of individual security methods (e.g. encryption) or devices (e.g. firewalls).

The strengths of this holistic concept lie rather in the interaction of a host of security measures in the plant network:

- Formation of a network architecture with defense in depth security, combined with segmenting of the plant into security cells
- Network administration, assignment of IP addresses, and division into subnetworks
- Operation of plants in Windows domains (active directory)
- Administration of Windows operator authorizations and SIMATIC PCS 7 operator authorizations; integration of SIMATIC PCS 7 operator authorizations into the Windows administration
- Reliable control of time synchronization
- Management of security patches for Microsoft products
- Use of virus scanners, allowlisting software and firewalls
- Establishment and operation of support access and remote access (VPN, IPSec)

The manual "PCS 7 Security Concept (Basic)" is available from the Siemens Industry Online Support:

https://support.industry.siemens.com/cs/ww/en/view/26462131

© Siemens AG 2024

Design

On the system side, SIMATIC PCS 7 supports implementation of guidelines and recommendations of the security concept by:

- The compatibility statement with anti-virus software can be found in the compatibility tool: https://support.industry.siemens.com/kompatool/pages/main/index.jsf
- Use of the local Windows firewall
- Automatic setting of safety-related parameters during setup, e.g. Windows firewall
- Operator administration and authentication using SIMATIC Logon (for details, see "SIMATIC Logon" section)
- Integration of the Industrial Security Appliance SCALANCE SC-600
- Industrial Next Generation Firewall: https://mall.industry.siemens.com/mall/en/b1/Catalog/Products/10354142?tree=CatalogTree
- Application allowlisting

Industrial Next Generation Firewall

With the Industrial Next Generation Firewall (see: PCS 7 Add-Ons Catalog, "Industrial Cybersecurity Services" section), Siemens offers a tested and validated firewall in different performance classes (PA-440, PA-450, PA-460 and PA-1410). It is coordinated for use with SIMATIC PCS 7 and WinCC. The Industrial Next Generation Firewall works excellently with SIMATIC NET communication products. It features comprehensive hardware and software functions for SIMATIC PCS 7 and WinCC projects. These functions include:

- Application layer / Stateful inspection firewall
- IPSec VPN gateway
- Intrusion detection system
- File and data filtering
- High availability (optional)

The Industrial Next Generation Firewall has numerous advantages compared with conventional firewalls, e.g.:

- Excellent price/performance ratio
- Partnership with Palo Alto Networks (repeated "Gartner Magic Quadrant Leader" for Enterprise Network Firewalls)
- Hardened operating system (on Linux-based PanOS)
- Secure system architecture (e.g. combination of OS and FW updates in a single bundle)
- Detection of Layer 7 communication (e.g. start, stop, read, write to the S7 protocol and numerous other protocols)
- Extensibility with optional functions (e.g. virus and malware protection, URL filtering, identification of compromised hosts)

More information

More information is available online at:

www.siemens.com/ngfw

Industrial DMZ Infrastructure

The Industrial DMZ Infrastructure is a turnkey concept with integrated security functions for the segmentation of IT from OT networks. With the experience of Siemens experts in the fields of automation, digitalization and cybersecurity, this complete solution is optimized for use in production networks and meets the highest requirements in terms of both availability and security.

The concept has the following properties, among others:

Design (continued)

- Very high demands on technology
  - The use of the Industrial Next Generation Firewall enables data analysis beyond the usual protocol and port checks up to the application layer (OSI Layer 7).
- Segmenting of IT/OT networks
  - The Industrial DMZ Infrastructure protects the OT network and its production from unauthorized access from the internet and IT networks by using (optionally redundant) front and back firewalls.
- Virtualization
  - The security functions are provided virtualized on a dedicated virtualization host, which makes it possible to extend the Industrial DMZ Infrastructure with further security functions in addition to the functions offered.

Support in selecting the firewall as well as information on integrated and additive services and the Industrial DMZ Infrastructure is available at:

Customer Service

Email: services.automation@siemens.com

More information

More information is available online at:

www.siemens.com/idmz

SCALANCE SC Industrial Security Appliances

The SCALANCE S Industrial Security Appliances are used for protecting devices and networks in automation engineering and industrial communication. They are distinguished, for example, by the following features:

- Implementation of a cell protection concept and support in implementing the Siemens Defense in Depth security concept
- Checking and filtering of data traffic by integrated firewall and thus:
  - Protection against operator mistakes
  - Prevention of unauthorized access
  - Prevention of faults and communications overload
- Authentication of communication partners and encryption of transmitted data via VPN, thus protecting communication against espionage and manipulation
- Rugged, industry-compatible device design
- Easy and clear configuration:

  The TIA Portal can be used to configure and diagnose all SIMATIC NET security products from a central point
- Protocol-agnostic communication security (e.g. independent of PROFINET or other Ethernet-based fieldbus solutions)
- Secure remote access via the internet possible with any provider

Product variants:

Industrial Firewall Appliances:

SCALANCE SC622-2C;

- Used for network separation according to PROFIsafe in order to make PROFIsafe address easier to manage
- Uses stateful inspection firewall to protect network segments against unauthorized access
- Connection via 2x combo port, electrical with RJ45 (10/100/1 000 Mbps) or optical via SFPs (1 000 Mbps)

© Siemens AG 2024

Design (continued)

- Firewall data throughput up to 600 Mbps
- Connection to SINEMA Remote Connect via VPN

SCALANCE SC632-2C;

- Uses stateful inspection firewall to protect network segments against unauthorized access
- Connection via 2x combo port, electrical with RJ45 (10/100/1 000 Mbps) or optical with SFPs (100 Mbps or 1 000 Mbps)
- Firewall data throughput up to 600 Mbps
- Connection to SINEMA Remote Connect via VPN

SCALANCE SC636-2C;

- Uses stateful inspection firewall to protect network segments against unauthorized access
- Connection via 4x port, electrical with RJ45 (10/100/1000 Mbps) and 2x combo port, electrical with RJ45 (10/100/1000 Mbps) or optical with SFPs (100 Mbps or 1000 Mbps)
- Firewall data throughput up to 600 Mbps
- Connection to SINEMA Remote Connect via VPN

Industrial VPN Appliances:

SCALANCE SC642-2C;

- Uses stateful inspection firewall to protect network segments against unauthorized access
- Simultaneous operation of up to 200 VPN tunnels possible
- Connection via 2x combo port, electrical with RJ45 (10/100/1 000 Mbps) or optical with SFPs (100 Mbps or 1 000 Mbps)
- Firewall data throughput up to 600 Mbps
- VPN data throughput up to 120 Mbps
- Connection to SINEMA Remote Connect via VPN

SCALANCE SC646-2C;

- Uses stateful inspection firewall to protect network segments against unauthorized access
- Simultaneous operation of up to 200 VPN tunnels possible
- Connection via 4x port, electrical with RJ45 (10/100/1000 Mbps) and 2x combo port, electrical with RJ45 (10/100/1000 Mbps) or optical with SFPs (100 Mbps or 1000 Mbps)
- Firewall data throughput up to 600 Mbps
- VPN data throughput up to 120 Mbps
- Connection to SINEMA Remote Connect via VPN

Note:

Configuration is carried out using the TIA Portal. This means that all SIMATIC NET security products can be configured and diagnosed from a central point. All the configuration data can be saved on the optional C-plug removable data storage medium (not included in scope of supply) so that the Industrial Security Appliance can be replaced quickly in the event of a fault and without the need for a programming device.

Configuration using Web Based Management (WBM), Command Line Interface (CLI) or SNMP in addition to configuration via TIA Portal.

Design (continued)

SCALANCE S Industrial Security Appliance

© Siemens AG 2024

Selection and ordering data

SCALANCE S Industrial Security Appliances For protecting devices and networks in discrete manufacturing and the process industry used for securing industrial communication; Industrial Security Appliances protect network segments against unauthorized access using a Stateful Inspection Firewall; choice of 10/100/1000 Mbps ports for connection; electronic manual on DVD; English, German	
SCALANCE SC622-2C Industrial Security Appliance; for protecting devices and networks in discrete manufacturing and the process industry for securing industrial communication with firewall. Additional functions: Address translation (NAT/NAPT); 2x combo port, electrical with RJ45 (10/100/1000 Mbps) or optical with SFPs (1 000 Mbps); hardware separation of ports; integrated SINEMA RC device license	**6GK5622-2GS00-2AC2**
SCALANCE SC632-2C Industrial Security Appliance; for protecting devices and networks in discrete manufacturing and the process industry for securing industrial communication with firewall; additional functions: Address translation (NAT/NAPT); 2x combo port, electrical with RJ45 (10/100/1 000 Mbps) or optical with SFPs (100 Mbps or 1000 Mbps); integrated SINEMA RC device license	**6GK5632-2GS00-2AC2**
SCALANCE SC636-2C Industrial Security Appliance; for protecting devices and networks in discrete manufacturing and the process industry for securing industrial communication with firewall; additional functions: Flexible security zones, address translation (NAT/NAPT); 4x electrical with RJ45 (10/100/1 000 Mbps) and 2x combo port, electrical with RJ45 (10/100/1000 Mbps) or optical with SFPs (100 Mbps or 1 000 Mbps); integrated SINEMA RC device license	**6GK5636-2GS00-2AC2**
SCALANCE SC642-2C Industrial Security Appliance; for protecting devices and networks in discrete manufacturing and the process industry for securing industrial communication with firewall and VPN; additional functions: Address translation (NAT/NAPT); 2x combo port, electrical with RJ45 (10/100/1 000 Mbps) or optical with SFPs (100 Mbps or 1000 Mbps); integrated SINEMA RC device license	**6GK5642-2GS00-2AC2**

Selection and ordering data (continued)

SCALANCE SC646-2C Industrial Security Appliance; for protecting devices and networks in discrete manufacturing and the process industry for securing industrial communication with firewall and VPN; additional functions: Flexible security zones, address translation (NAT/NAPT); 4x electrical with RJ45 (10/100/1 000 Mbps) and 2x combo port, electrical with RJ45 (10/100/1000 Mbps) or optical with SFPs (100 Mbps or 1 000 Mbps); integrated SINEMA RC device license	**6GK5646-2GS00-2AC2**
Accessories	
C-PLUG Removable data storage medium for simple replacement of devices in event of fault; for saving of configuration and application data, can be used in SIMATIC NET products with C-PLUG slot	**6GK1900-0AB00**
SITOP compact 24 V/0.6 A 1-phase power supply with wide-range input 85 to 264 V AC; 110 to 300 V DC; stabilized output voltage 24 V, rated output current value 0.6 A, slim design	**6EP1331-5BA00**

Note:

For more components and accessories, especially cable material and connectors, as well as tools and supplementary material for assembly, see "Industrial communication - Industrial Ethernet - Passive network components" in the sections "FastConnect", "ITP cables and connectors" and "Fiber-optic cables" as well as Catalog IK PI.

More information

Siemens provides automation and drive products with industrial security functions that support the secure operation of plants or machines. They are an important component in a holistic industrial security concept. With this in mind, our products undergo continuous development. We therefore recommend that you keep yourself informed with respect to our product updates. Please find further information and newsletters on this subject at:

To ensure the secure operation of a plant or machine it is also necessary to take suitable preventive action (e.g. cell protection concept) and to integrate the automation and drive components into a state-of-the-art holistic industrial security concept for the entire plant or machine. Any third-party products that may be in use must also be taken into account. Please find further information at:

© Siemens AG 2024

Overview

The security requirements of an industrial control system differ significantly from those of office IT. This starts with the ultimate goal, the availability of the system, and ends with the constraints in the industrial environment, such as systems that have long since been totally discontinued. With Industrial Cybersecurity Services, Siemens offers the answer for cybersecurity in the automation environment.

The comprehensive protection of your plant with Industrial Cybersecurity Services is based on the recommendations of international standard IEC 62443. With "Defense in Depth," Siemens has developed a multi-level security strategy that includes not only the necessary hardware and software, but also service experts who combine expertise in automation, digitalization and security. This is where Industrial Cybersecurity Services come in, offering services for plant security, network security and system integrity.

Plant Security Services:

- Security assessments according to IEC 624443 and NIS 2
- Industrial Security Consulting
- Remote Industrial Operations Services

Network Security Services:

- Industrial Next Generation Firewalls
- Industrial DMZ Infrastructure
- Remote Platform Software as a Service

System Integrity Services:

- Endpoint Protection
- Vilocify Vulnerability Services
- Patch Management
- Backup and Restore

Transparency of the current security status

Our security experts examine your system for specific vulnerabilities and security risks. This is based on international standards such as IEC 62443. On this basis, a security roadmap for the protection of your system is created with your cooperation.

Increased security level through closing of security vulnerabilities

With the help of innovative state-of-the-art technologies, organizational measures and employee training, the service experts close existing security vulnerabilities in your network and thus improve the protection of your system against cyberattacks. Siemens also relies on cooperation with competent, best-in-class partners to find the optimal solution for your plant.

Overview (continued)

Long-term protection through continuous security management

Industrial security is not a one-time action, but rather an ongoing process. Service experts ensure that the security strategy and measures are constantly adapted to new circumstances, threats and regulatory requirements. Continuous monitoring leads to transparency and early detection of cyber threats.

Selection and ordering data

The current selection and ordering data can be accessed directly in the Siemens Industry Mall:

https://mall.industry.siemens.com/mall/en/WW/Catalog/Products/10368837?tree=CatalogTree

More information

More information on the Industrial Cybersecurity Services is available on the internet:

http://www.siemens.com/icss

If you have any further questions, please contact:

Email: services.automation@siemens.com

© Siemens AG 2024

Overview

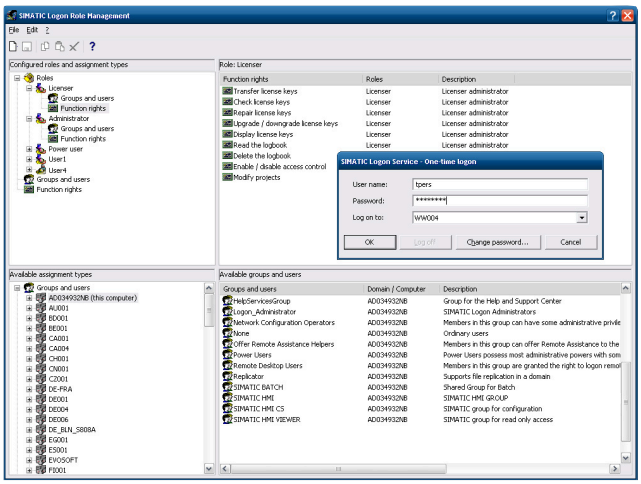

SIMATIC Logon role management

Centralized user administration with access control and electronic signature

SIMATIC Logon is a centralized user administration system with access control that also supports an electronic signature. It is in a position to work with applications in which roles have already been created or can be defined.

SIMATIC Logon facilitates the validation of plants in compliance with FDA 21 CFR Part 11.

Application

The SIMATIC Logon V2.0 software package is released for the following systems:

- SIMATIC PCS 7 Process Control System V9.1 and V10.0- SIMATIC WinCC V8.0
- SIMATIC WinCC Runtime Professional V19 (TIA Portal)
- In conjunction with SIMATIC Logon Remote Access also SIMATIC WinCC Runtime Advanced

Note:

The products listed here in the ordering data are not relevant for SIMATIC PCS 7 V10.0. The software and license of SIMATIC Logon V2.0 are integrated.

Design

Logon devices

The following logon devices are supported by SIMATIC Logon:

- Keyboard
- Smart card reader (see "SIMATIC Industrial Workstation/IPC" section under "Expansion components")

Number of licenses

If SIMATIC Logon is not integrated on the system side, you require the same number of SIMATIC Logon licenses as the number of Clients/Single Stations accessing the application for which SIMATIC Logon is used as access protection.

SIMATIC Logon Upgrade

All previous versions can be upgraded to the current version.

Function

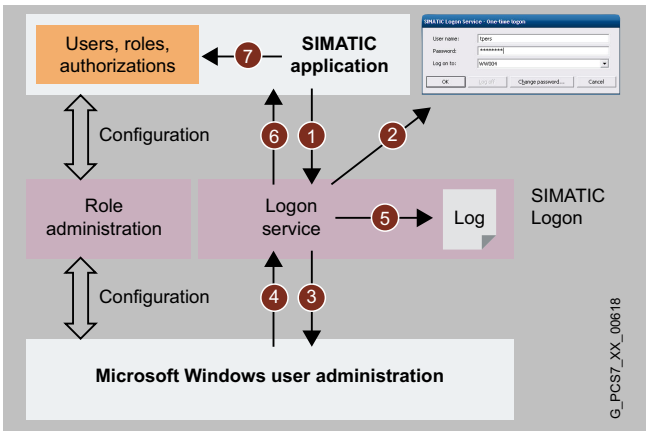

User logon procedure using the SIMATIC Logon Service.

SIMATIC Logon can be used to configure the associated roles and functional authorizations (role management) for a SIMATIC application. This configuration is stored in the database of the SIMATIC application.

SIMATIC Logon performs Windows user authentication during application runtime; the procedure is as follows:

- When prompted by a SIMATIC application (1), the SIMATIC Logon Service opens a logon dialog (2). The user enters his or her name, password and domain. The logon data are sent to the user administration of the operating system (3), which then reports the authentication attempt event to the logon service (4).
- The logon service records all events in an event log (5), for example successful logon, failed logon attempts, logoff by the user, automatic logoff and password change.
- If authentication is successful, the SIMATIC Logon Service sends this information, including the Windows group membership, to the SIMATIC application (6), which maps the roles and associated functional rights within the application (7).

Electronic signature

The electronic signature means that operations cannot be performed until enabled by a previously authorized user. Authorization is assigned in the application by associating the users grouped at operating system level with the group with the operations.

Note:

At the moment this function is implemented as a system function only on SIMATIC BATCH. The electronic signature can, however, also be flexibly implemented for specific applications.

Development Kit

The Development Kit uses an example to show the programmer how to embed SIMATIC Logon into a customer application.

© Siemens AG 2024

Selection and ordering data

For TIA applications only	
SIMATIC Logon V2.0 Single license for 1 installation, 7 languages (English, German, French, Italian, Spanish, Chinese, Japanese), software class A Runs with the following operating systems: • Windows 10 • Windows Server 2016 • Windows Server 2019 Type of delivery: 2× USB flash drive Note: This product is not intended for SIMATIC PCS 7 applications!	**6ES7658-7BX02-0YA0**
SIMATIC Logon Upgrade to V2.0 Single license for 1 installation, 7 languages (English, German, French, Italian, Spanish, Chinese, Japanese), software class A For operating systems, see above Type of delivery: 2× USB flash drive Note: This product is not intended for SIMATIC PCS 7 applications!	**6ES7658-7BX02-0YE0**
Additional components for SIMATIC Logon with SIMATIC WinCC flexible and WinCC TIA Portal	
SIMATIC Logon Remote Access (3 clients) Remote access for 3 clients (configured with WinCC flexible Version 2007 and higher or WinCC TIA Portal), single license for 1 installation Goods delivery: License key USB flash drive, Certificate of License	**6ES7658-7BA00-2YB0**
SIMATIC Logon Remote Access (10 clients) Remote access for 10 clients (configured with WinCC flexible Version 2007 and higher or WinCC TIA Portal), single license for 1 installation Goods delivery: License key USB flash drive, Certificate of License	**6ES7658-7BB00-2YB0**

© Siemens AG 2024

12/2	**Introduction**
12/3	**SIMATIC Rack PC**
12/6	IPC547J
12/12	IPC647E
12/21	IPC847E
12/30	**SIMATIC Microbox PC**
12/33	OS Client IPC427E
12/35	OS Client IPC477E
12/37	**Expansion components**
12/37	Mouse and keyboard
12/40	Smart card reader
12/41	Input tools

This chapter was taken unmodified from SIMATIC PCS 7 V9.1 and will be updated in September 2024.

© Siemens AG 2024

Overview

We offer a select range of modern and powerful SIMATIC Process Control System IPCs for the system architecture located above the controller level in the SIMATIC PCS 7 system architecture, e.g. for

- Engineering
- Operator control and monitoring (also via internet/intranet)
- Asset management
- Batch automation
- Route control
- Remote control
- IT applications

SIMATIC Process Control System IPCs based on a SIMATIC Rack PC of the type IPC 647E or IPC 847E are optimized for use as single station, server or client, and can be expanded in line with the system.

As a supplement, the SIMATIC Microbox PC in the SIMATIC Process Control System Client IPC427E / IPC477E version provides low-cost client alternatives for operator control and monitoring and for batch automation.

Application

Basic hardware for single station/server

SIMATIC Process Control System IPCs of type IPC 647E or IPC 847E, which are available for use as single stations or servers, vary in their power, features, expansion spares, and length of product lifecycle. A table compares the essential features of these types in the catalog section "SIMATIC Rack PC, introduction", allowing you to quickly narrow down the search for your specific application. You can then use the detailed technical data in the same catalog section to define this preselection in detail.

Basic hardware for clients

Compared to the more compact SIMATIC Process Control System Client IPC427E / IPC477E client versions, clients based on a SIMATIC Rack PC have a larger number and greater variety of interfaces. They therefore offer more expansion options and can be used more universally. In multi-monitor mode, you can control up to four process monitors with equivalent quality.

The main advantage of the SIMATIC Process Control System Clients IPC427E / IPC477E is their highly compact and rugged design which allows continuous 24/7 maintenance-free operation without fans. These clients are particularly resistant to vibration and shock in the version with solid-state drive (SSD) because there are no rotating storage media. The Process Control System Client IPC427E is a computing unit without monitor in a compact metal enclosure. The SIMATIC Process Control System Client IPC477E was designed as built-in unit with a 22" TFT Touch Panel and integrated computing unit. The expansion options for both devices are limited due to their design.

Options

Notes on the use of other basic hardware and non-SIMATIC software

Siemens guarantees the compatibility of hardware and software for system configurations based on components in this catalog.

The system test confirms that the system software of the SIMATIC PCS 7 process control system can be run on the basic hardware offered in this catalog. Despite comprehensive tests, it cannot be excluded that the function of a SIMATIC PCS 7 system could be disturbed or interfered with as a result of additional non-SIMATIC software, i.e. software which has not been explicitly approved for SIMATIC PCS 7.

If you use hardware other than the basic hardware offered in this catalog, or additional non-SIMATIC software, this is at your own risk. If compatibility problems arise as a result of these hardware/software components, the support provided for their elimination is not free of charge.

The licenses for plant bus communication via Industrial Ethernet, i.e. for Basic Communication Ethernet (BCE) and CP 1623/1628 communication (IE), are bound to the SIMATIC Process Control System IPCs. Depending on the selected type of communication, the SIMATIC Process Control System IPCs for Single Stations and Servers are delivered as standard with a network adapter plus BCE license or a CP 1623 plus SIMATIC NET HARDNET IE S7 communication software.

SIMATIC PCS 7 BCE V9.1 license

If you are using SIMATIC PCS 7 V9.1 on other computers (not SIMATIC Process Control System IPC), you also require a SIMATIC PCS 7 BCE V9.1 license (Article No. 6ES7650-1CD68-2YB5 for goods delivery; Article No. 6ES7650-1CD68-2YH5 for online delivery) for all Single Stations or Servers that are connected to the plant bus via a standard network adapter and not via a CP 1623/CP 1628.

More information

Note:

All product information contained here on the subject of the Process Control System IPC has not yet been updated and corresponds to the status of April 2024. A comprehensive update to version V10.0 of the products and descriptions offered is expected to be released by September 2024.

© Siemens AG 2024

Overview

SIMATIC IPC647E and IPC847E

The SIMATIC Process Control System IPC is an excellent platform for the configuration of single stations, servers and clients. With their all-round capabilities they are ideally equipped for numerous applications in process automation.

Since the basic components such as chip set, processor and work memory are identical, many technical specifications of the IPC647E and IPC847E are comparable. The essential differences result from the different overall heights. Since the IPC647E is only half as high as IPC847E, the number and variety of free slots are reduced. On the other hand, the more compact design requires significantly less space and enables higher packing densities in the control cabinet. This allows the realization of space-saving designs.

The IPC847E is the most powerful and best equipped SIMATIC Process Control System IPC. Its numerous and varied slots provide a great deal of potential for expansion. The IPC847E is predestined for use as a server or single station. Since it would be over-dimensioned as a client, IPC847E is not offered in this version.

© Siemens AG 2024

Application

Features		SIMATIC Process Control System IPC	
		IPC647E	IPC847E
Available SIMATIC PCS 7 pre-installations	V9.1	●	●
Available versions	ES/OS single station	●	●
	OS Server	●	●
	OS Client	●	●
Height		2 U	4 U
ECC work memory		●	●
Onboard RAID controller	RAID 1 (SATA HDD)	●	●
	RAID 1 (SATA SSD)	●	●
	RAID 5 (SATA SSD)	–	●
Hardware RAID controller (PCI x8)	RAID 1 (SAS HDD)	●	●
	RAID 5 (SAS HDD)	–	●
Hard disks or solid state drives (SSD)	SATA/SAS HDD	●/●	●/●
	SATA SSD	●	●
	M.2 NVMe SSD	●	●
Redundant power supply	With diagnostics	●	●
	Without diagnostics	–	–
Lifecycle	Marketing	5 years	5 years
	Spare parts/repair	5 years	5 years

Specially optimized versions are available for operation as single stations, servers or clients. The operating system and the following ES/OS software of the SIMATIC PCS 7 process control system are factory installed:

- Single station: PCS 7 Engineering Software for AS/OS (including OS Runtime software)
- Server: PCS 7 OS software Server
- Client: PCS 7 OS software Client

You only need the corresponding licenses in order to use the pre-installed SIMATIC PCS 7 software.

Note:

Please note the standard installation when using the SIMATIC Process Control System IPC within the SIMATIC PCS 7 process control system for other tasks, e.g. as basic hardware for SIMATIC BATCH, SIMATIC Route Control, PCS 7 TeleControl, PCS 7 PowerControl, PCS 7 Process Historian, PCS 7 Information Server or PCS 7 Web Server. You can then expand or discard the existing SIMATIC PCS 7 pre-installation, or restore it using one of the Restore DVD sets included (for details, see "Restore DVD set" for the relevant IPC type).

© Siemens AG 2024

Design

Types of plant bus communication

A Process Control System IPC in the single station or server version can be operated in a variety of ways on the Industrial Ethernet plant bus, depending on the type and number of automation systems connected:

Interface module	Software	for AS communication
Communications module CP 1623/CP 1628	SIMATIC NET HARDNET-IE S7 communication software, licensed for up to four CP 1623/CP 1628 (4x license)	with up to 64 AS single stations (no AS redundancy stations)
	SIMATIC NET HARDNET-IE S7-REDCONNECT communication software, licensed for up to four CP 1623/CP 1628 (4x license)	with redundant automation systems (redundancy stations)
Ethernet card	BCE (Basic Communication Ethernet) license	with up to 8 AS single stations

The SIMATIC NET HARDNET-IE S7-REDCONNECT PowerPack is suitable for upgrading the SIMATIC NET HARDNET-IE S7 communication software. For order data, see "Industrial Communication" section, "Industrial Ethernet, System Connection PCS 7 Systems" subsection.

The Industrial Ethernet versions of the SIMATIC Process Control System IPC for single stations and servers are equipped as standard with a CP 1623 communications module and SIMATIC NET HARDNET-IE S7 communication software. The BCE license is relevant for the BCE versions of the SIMATIC Process Control System IPC.

Upgrade from BCE to CP 1623/1628 communication

OS single station and OS server with BCE communication can be retro-upgraded for communication with CP 1623/1628. Items required:

- Network card for connecting to Industrial Ethernet:
  - CP 1623 with PCI Express interface or
  - CP 1628 with PCI Express interface and additional security functions
- S7 Communication Software for CP 1623/CP 1628
  - SIMATIC NET HARDNET-IE S7 for communication with AS single stations or
  - SIMATIC NET HARDNET-IE S7 REDCONNECT for communication with AS redundancy stations and AS single stations

You can find more information about the components and order data in the "Industrial Communication" section, "Industrial Ethernet, System Connection PCS 7 Systems" subsection.

Expansion components

The core component of the SIMATIC Process Control System IPC is a SIMATIC industrial PC without mouse, keyboard or monitor. This basic hardware can be expanded further with the following components from this catalog depending on the environment of use and customer requirements:

- Accessories
  - Memory modules
  - Country-specific power supply cord
  - Tower kit (IPC847E only)
- Expansion components
  - Mouse and keyboard
  - Input tools (touch pens)
  - Smart card reader

Design (continued)

Multi-monitor mode can be selected when configuring the SIMATIC Process Control System IPC using the selection table or configurator, but it can also be installed and expanded later. The number of process monitors that can be operated on a SIMATIC Process Control System IPC varies according to the IPC type and configuration. In the maximum configuration, multi-monitor mode with 4 process monitors is possible depending on the IPC type.

© Siemens AG 2024

Selection and ordering data

Individually configurable SIMATIC Process Control System IPC547J

	Article No.									
SIMATIC Process Control System - IPC547J **For ES/OS Single Station, OS client** (RACK PC, 19", 4 U) Interfaces: 3 x Gbps Ethernet (RJ45); 1 x DVI-D; 2 x DisplayPort; 1 x COM (RS 232, 9-pin); audio; 6 x USB3.1 Gen2 on the rear (2 x Type C, 4 x Type A), 2 x USB3.1 Gen1 (Type A) on the front; 2 x USB2.0 internal; 7 slots: 5 x CI Express, 2 x PCI; temperature and fan monitoring; watchdog; card retainer	**6ES7660-** **8**	•	•	•	•	-	•	•	•	•
Processor and system type										
Core i3-10100E (4C/8T, 3.2 (3.8) GHz, 6 MB cache) / MB (chipset W480E)										
• Core i3-10100E (4C/8T, 3.2 (3.8) GHz, 6 MB cache) / MB (chip set W480E) - PCS 7 ES/OS Single Station, OS client[1)]		**A**								
Core i5-10500E (6C/12T, 3.1 (4.2) GHz, 12 MB cache) / MB (chipset W480E), iAMT										
• Core i5-10500E (6C/12T, 3.1 (4.2) GHz, 12 MB cache) / MB (chip set W480E), iAMT - PCS 7 ES/OS Single Station, OS client[1)]		**B**								
Core i7-10700E (8C/16T, 2.9 (4.5) GHz, 16 MB cache) / MB (chipset W480E), iAMT										
• Core i7-10700E (8C/16T, 2.9 (4.5) GHz, 16 MB cache) / MB (chip set W480E), iAMT - PCS 7 ES/OS Single Station, OS client[2)]		**D**								
Xeon W-1270E (8C/16T, 3.4 (4.8) GHz, 16 MB cache) / MB (chipset W480E), iAMT										
• Xeon W-1270E (8C/16T, 3.4 (4.8) GHz, 16 MB cache) / MB (chip set W480E), iAMT - PCS 7 ES/OS Single Station, OS client[2)]		**H**								
Drives:										
(HDD)										
• 1 TB HDD [Enterprise] 3.5" SATA			**A**							
• 2 TB HDD [Enterprise] 3.5" SATA			**B**							
• RAID1, 2 x 1 TB HDD [Enterprise] 3.5" SATA			**C**							
• RAID1, 2 x 2 TB HDD [Enterprise] 3.5" SATA			**D**							
• RAID1, 2 x 2 TB HDD [Enterprise] 3.5" SATA + 2 TB HDD [Enterprise] 3.5" SATA as Hot Spare			**E**							
• RAID1, 2 x 2 TB HDD [Enterprise] 3.5" SATA + 480 GB 2.5" SSD SATA (for operating system if M.2 SSD not ordered)			**F**							
SSD										
• 480 GB SSD 2.5" SATA			**P**							
• 960 GB SSD 2.5" SATA			**Q**							
• 1920 GB SSD 2.5" SATA			**R**							
• RAID1, 2 x 480 GB SSD 2.5" SATA			**S**							
• RAID1, 2 x 960 GB SSD 2.5" SATA			**T**							
• RAID1, 2 x 1920 GB SSD 2.5" SATA			**U**							
Without drives [3)]			**X**							
Drive cage / M.2 memory										
• Drive cage for internal installation, 0.5 g vibration, 5 g shock[3)]				**0**						
• Drive cage for internal installation, 0.5 g vibration, 5 g shock, 512 GB SSD M.2 NVMe (M.2 slot occupied) (for operating system)				**1**						
• Drive cage for internal installation, 0.5 g vibration, 5 g shock, 1024 GB SSD M.2 NVMe (M.2 slot occupied) (for operating system)				**2**						
• Drive cage for removable trays, on the front[3)]				**4**						
• Drive cage for removable trays, on the front, 512 GB SSD M.2 NVMe (M.2 slot occupied) (for operating system)				**5**						
• Drive cage for removable trays, on the front, 1024 GB SSD M.2 NVMe (M.2 slot occupied) (for operating system)				**6**						
Main memory / TPM										
• 8 GB DDR4 SDRAM (2 × 4 GB), dual channel					**0**					
• 16 GB DDR4 SDRAM (2 × 8 GB), dual channel					**1**					
• 32 GB DDR4 SDRAM (2 × 16 GB), dual channel					**2**					
• 64 GB DDR4 SDRAM (2 × 32 GB), dual channel					**3**					
• 128 GB DDR4 SDRAM (4 × 32 GB), dual channel					**4**					
• 16 GB DDR4 SDRAM (2 × 8 GB), dual channel, TMP 2.0					**5**					
• 32 GB DDR4 SDRAM (2 × 16 GB), dual channel, TMP 2.0					**6**					
• 64 GB DDR4 SDRAM (2 × 32 GB), dual channel, TMP 2.0					**7**					
• 128 GB DDR4 SDRAM (4 × 32 GB), dual channel, TMP 2.0					***8***					

© Siemens AG 2024

Selection and ordering data (continued)

	Article No.									
Software installation										
• PCS 7 V9.1 preinstalled							1			
Operating system / Restore data storage medium										
• Windows 10 IoT Enterprise 2019 LTSC, MUI (en, de, fr, it, sp, ch), 64-bit, without Restore USB flash drive (for processor Core i3 / i5)[2]								A		
• Windows 10 IoT Enterprise 2019 LTSC, MUI (en, de, fr, it, sp, ch), 64-bit, with Restore USB flash drive (for processor Core i3 / i5)[2]								B		
• Windows 10 IoT Enterprise 2019 LTSC, MUI (en, de, fr, it, sp, ch), 64-bit, without Restore USB flash drive (for processor Core i7 / Xeon)[1]								C		
• Windows 10 IoT Enterprise 2019 LTSC, MUI (en, de, fr, it, sp, ch), 64-bit, with Restore USB flash drive (for processor Core i7 / Xeon)[1]								D		
Enclosure / Communication / Multi-monitor										
• Blue chromated enclosure, without expansions									A	
• Blue chromated enclosure, multi-monitor 4-5 displays, combined, onboard interfaces (2 x DP) + PCIe x16 graphics card (3 x mDP: 3 x adapter mDP to DP), 2 GB (1 slot occupied)									B	
• Blue chromated enclosure, BCE									C	
• Blue chromated enclosure, BCE, multi-monitor 4-5 displays, combined, onboard interfaces (2 x DP) + PCIe x16 graphics card (3 x mDP: 3 x adapter mDP to DP), 2 GB (1 slot occupied)									D	
• Blue chromated enclosure, Industrial Ethernet (CP1623), (1 slot occupied)									E	
• Blue chromated enclosure, Industrial Ethernet (CP1623), (1 slot occupied), multi-monitor 4-5 displays, combined, onboard interfaces (2 x DP) + PCIe x16 graphics card (3 x mDP: 3 x adapter mDP to DP), 2 GB (1 slot occupied)									F	
• Painted enclosure, without expansions									G	
• Painted enclosure, multi-monitor 4-5 displays, combined, onboard interfaces (2 x DP) + PCIe x16 graphics card (3 x mDP: 3 x adapter mDP to DP), 2 GB (1 slot occupied)									H	
• Painted enclosure, BCE									J	
• Painted enclosure, BCE, multi-monitor 4-5 displays, combined, onboard interfaces (2 x DP) + PCIe x16 graphics card (3 x mDP: 3 x adapter mDP to DP), 2 GB (1 slot occupied)									K	
• Painted enclosure, Industrial Ethernet (CP1623), (1 slot occupied)									L	
• Painted enclosure, Industrial Ethernet (CP1623), (1 slot occupied), multi-monitor 4-5 displays, combined, onboard interfaces (2 x DP) + PCIe x16 graphics card (3 x mDP: 3 x adapter mDP to DP), 2 GB (1 slot occupied)									M	
Power supply / power supply cord										
• 100/240 V AC industrial power supply unit										
- Without power supply cord										0
- Power supply cord for Europe										1
- Power supply cord for USA										2
- Power supply cord for China										3
• 2 x 100/240 V AC redundant industrial power supply unit										
- Without power supply cord										4
- Power supply cord for Europe										5
- Power supply cord for USA										6
- Power supply cord for China										7

1) Selection criterion "Processor / System type", Position A, B, cannot be combined with selection criterion "Operating system / Restore data storage medium", Position C, D
2) Selection criterion "Processor / System type", Position D, H, cannot be combined with selection criterion "Operating system / Restore data storage medium", Position A, B
3) Selection criterion "Drives", Position X, cannot be combined with selection criterion "Drive cage / M.2 memory", Position 0, 4

	Article No.									
SIMATIC Process Control System - IPC547J	**6ES7660-**									
For OS server, engineering server, web server (RACK PC, 19", 4 U) Interfaces: 3 x Gbps Ethernet (RJ45); 1 x DVI-D; 2 x DisplayPort; 1 x COM (RS 232, 9-pin); audio; 6 x USB3.1 Gen2 on the rear (2 x Type C, 4 x Type A), 2 x USB3.1 Gen1 (Type A) on the front; 2 x USB2.0 internal; 7 slots: 5 x CI Express, 2 x PCI; temperature and fan monitoring; watchdog; card retainer	8	•	•	•	•	-	•	•	•	•
Processor and system type										
Xeon W-1270E (8C/16T, 3.4 (4.8) GHz, 16 MB cache) / MB (chipset W480E), iAMT										
• Xeon W-1270E (8C/16T, 3.4 (4.8) GHz, 16 MB cache) / MB (chip set W480E), iAMT - PCS 7 OS server		J								

© Siemens AG 2024

Selection and ordering data (continued)

	Article No.								
Drives:									
(HDD)									
• 1 TB HDD [Enterprise] 3.5" SATA			A						
• 2 TB HDD [Enterprise] 3.5" SATA			B						
• RAID1, 2 x 1 TB HDD [Enterprise] 3.5" SATA			C						
• RAID1, 2 x 2 TB HDD [Enterprise] 3.5" SATA			D						
• RAID1, 2 x 2 TB HDD [Enterprise] 3.5" SATA + 2 TB HDD [Enterprise] 3.5" SATA as Hot Spare			E						
• RAID1, 2 x 2 TB HDD [Enterprise] 3.5" SATA + 480 GB 2.5" SSD SATA (for operating system if M.2 SSD not ordered)			F						
SSD									
• 480 GB SSD 2.5" SATA			P						
• 960 GB SSD 2.5" SATA			Q						
• 1920 GB SSD 2.5" SATA			R						
• RAID1, 2 x 480 GB SSD 2.5" SATA			S						
• RAID1, 2 x 960 GB SSD 2.5" SATA			T						
• RAID1, 2 x 1920 GB SSD 2.5" SATA			U						
Without drives [1]			X						
Drive cage / M.2 memory									
• Drive cage for internal installation, 0.5 g vibration, 5 g shock[1]				0					
• Drive cage for internal installation, 0.5 g vibration, 5 g shock, 512 GB SSD M.2 NVMe (M.2 slot occupied) (for operating system)				1					
• Drive cage for internal installation, 0.5 g vibration, 5 g shock, 1024 GB SSD M.2 NVMe (M.2 slot occupied) (for operating system)				2					
• Drive cage for removable trays, on the front[1]				4					
• Drive cage for removable trays, on the front, 512 GB SSD M.2 NVMe (M.2 slot occupied) (for operating system)				5					
• Drive cage for removable trays, on the front, 1024 GB SSD M.2 NVMe (M.2 slot occupied) (for operating system)				6					
Main memory / TPM									
• 8 GB DDR4 SDRAM (2 × 4 GB), dual channel					0				
• 16 GB DDR4 SDRAM (2 × 8 GB), dual channel					1				
• 32 GB DDR4 SDRAM (2 × 16 GB), dual channel					2				
• 64 GB DDR4 SDRAM (2 × 32 GB), dual channel					3				
• 128 GB DDR4 SDRAM (4 × 32 GB), dual channel					4				
• 16 GB DDR4 SDRAM (2 × 8 GB), dual channel, TMP 2.0					5				
• 32 GB DDR4 SDRAM (2 × 16 GB), dual channel, TMP 2.0					6				
• 64 GB DDR4 SDRAM (2 × 32 GB), dual channel, TMP 2.0					7				
• 128 GB DDR4 SDRAM (4 × 32 GB), dual channel, TMP 2.0					8				
Software installation									
• PCS 7 V9.1 preinstalled						1			
Operating system / Restore data storage medium									
• Windows Server IoT 2019 Standard Edition incl. 16-core, 5 clients, 64-bit, MUI (en, de, fr, it, sp, ch), without Restore USB flash drive							P		
• Windows Server IoT 2019 Standard Edition incl. 16-core, 5 clients, 64-bit, MUI (en, de, fr, it, sp, ch), with Restore USB flash drive							Q		
Enclosure / Communication / Multi-monitor									
• Blue chromated enclosure, without expansions								A	
• Blue chromated enclosure, multi-monitor 4-5 displays, combined, onboard interfaces (2 x DP) + PCIe x16 graphics card (3 x mDP: 3 x adapter mDP to DP), 2 GB (1 slot occupied)								B	
• Blue chromated enclosure, BCE								C	
• Blue chromated enclosure, BCE, multi-monitor 4-5 displays, combined, onboard interfaces (2 x DP) + PCIe x16 graphics card (3 x mDP: 3 x adapter mDP to DP), 2 GB (1 slot occupied)								D	
• Blue chromated enclosure, Industrial Ethernet (CP1623), (1 slot occupied)								E	
• Blue chromated enclosure, Industrial Ethernet (CP1623), (1 slot occupied), multi-monitor 4-5 displays, combined, onboard interfaces (2 x DP) + PCIe x16 graphics card (3 x mDP: 3 x adapter mDP to DP), 2 GB (1 slot occupied)								F	
• Painted enclosure, without expansions								G	
• Painted enclosure, multi-monitor 4-5 displays, combined, onboard interfaces (2 x DP) + PCIe x16 graphics card (3 x mDP: 3 x adapter mDP to DP), 2 GB (1 slot occupied)								H	

© Siemens AG 2024

Selection and ordering data (continued)

	Article No.									
• Painted enclosure, BCE									J	
• Painted enclosure, BCE, multi-monitor 4-5 displays, combined, onboard interfaces (2 x DP) + PCIe x16 graphics card (3 x mDP: 3 x adapter mDP to DP), 2 GB (1 slot occupied)									K	
• Painted enclosure, Industrial Ethernet (CP1623), (1 slot occupied)									L	
• Painted enclosure, Industrial Ethernet (CP1623), (1 slot occupied), multi-monitor 4-5 displays, combined, onboard interfaces (2 x DP) + PCIe x16 graphics card (3 x mDP: 3 x adapter mDP to DP), 2 GB (1 slot occupied)									M	
Power supply / power supply cord										
• 100/240 V AC industrial power supply unit										
- Without power supply cord										0
- Power supply cord for Europe										1
- Power supply cord for USA										2
- Power supply cord for China										3
• 2 x 100/240 V AC redundant industrial power supply unit										
- Without power supply cord										4
- Power supply cord for Europe										5
- Power supply cord for USA										6
- Power supply cord for China										7

1) Selection criterion "Drives", Position X, cannot be combined with selection criterion "Drive cage / M.2 memory", Position 0, 4

SIMATIC Process Control System IPC547J as spare part

	Article No.									
SIMATIC Process Control System - IPC547J **Spare part** (RACK PC, 19", 4 U) Interfaces: 3 x Gbps Ethernet (RJ45); 1 x DVI-D; 2 x DisplayPort; 1 x COM (RS 232, 9-pin); audio; 6 x USB3.1 Gen2 on the rear (2 x Type C, 4 x Type A), 2 x USB3.1 Gen1 (Type A) on the front; 2 x USB2.0 internal; 7 slots: 5 x CI Express, 2 x PCI; temperature and fan monitoring; watchdog; card retainer	6ES7660- 8	•	•	•	•	-	•	•	•	•
Processor and system type										
Core i3-10100E (4C/8T, 3.2 (3.8) GHz, 6 MB cache) / MB (chipset W480E)										
• Core i3-10100E (4C/8T, 3.2 (3.8) GHz, 6 MB cache) / MB (chip set W480E) - spare part[1)2)]		U								
Core i5-10500E (6C/12T, 3.1 (4.2) GHz, 12 MB cache) / MB (chipset W480E), iAMT										
• Core i5-10500E (6C/12T, 3.1 (4.2) GHz, 12 MB cache) / MB (chip set W480E), iAMT - spare part[1)2)]		V								
Core i7-10700E (8C/16T, 2.9 (4.5) GHz, 16 MB cache) / MB (chipset W480E), iAMT										
• Core i7-10700E (8C/16T, 2.9 (4.5) GHz, 16 MB cache) / MB (chip set W480E), iAMT - spare part[1)3)]		W								
Xeon W-1270E (8C/16T, 3.4 (4.8) GHz, 16 MB cache) / MB (chipset W480E), iAMT										
• Xeon W-1270E (8C/16T, 3.4 (4.8) GHz, 16 MB cache) / MB (chip set W480E), iAMT - spare part[3)]		Y								
Drives:										
(HDD)										
• 1 TB HDD [Enterprise] 3.5" SATA			A							
• 2 TB HDD [Enterprise] 3.5" SATA			B							
• RAID1, 2 x 1 TB HDD [Enterprise] 3.5" SATA			C							
• RAID1, 2 x 2 TB HDD [Enterprise] 3.5" SATA			D							
• RAID1, 2 x 2 TB HDD [Enterprise] 3.5" SATA + 2 TB HDD [Enterprise] 3.5" SATA as Hot Spare			E							
• RAID1, 2 x 2 TB HDD [Enterprise] 3.5" SATA + 480 GB 2.5" SSD SATA (for operating system if M.2 SSD not ordered)			F							
SSD										
• 480 GB SSD 2.5" SATA			P							
• 960 GB SSD 2.5" SATA			Q							
• 1920 GB SSD 2.5" SATA			R							
• RAID1, 2 x 480 GB SSD 2.5" SATA			S							
• RAID1, 2 x 960 GB SSD 2.5" SATA			T							
• RAID1, 2 x 1920 GB SSD 2.5" SATA			U							
Without drives [4)]			X							

© Siemens AG 2024

Selection and ordering data (continued)

	Article No.									
Drive cage / M.2 memory										
• Drive cage for internal installation, 0.5 g vibration, 5 g shock[4]				0						
• Drive cage for internal installation, 0.5 g vibration, 5 g shock, 512 GB SSD M.2 NVMe (M.2 slot occupied) (for operating system)				1						
• Drive cage for internal installation, 0.5 g vibration, 5 g shock, 1024 GB SSD M.2 NVMe (M.2 slot occupied) (for operating system)				2						
• Drive cage for removable trays, on the front[4]				4						
• Drive cage for removable trays, on the front, 512 GB SSD M.2 NVMe (M.2 slot occupied) (for operating system)				5						
• Drive cage for removable trays, on the front, 1024 GB SSD M.2 NVMe (M.2 slot occupied) (for operating system)				6						
Main memory / TPM										
• 8 GB DDR4 SDRAM (2 × 4 GB), dual channel					0					
• 16 GB DDR4 SDRAM (2 × 8 GB), dual channel					1					
• 32 GB DDR4 SDRAM (2 × 16 GB), dual channel					2					
• 64 GB DDR4 SDRAM (2 × 32 GB), dual channel					3					
• 128 GB DDR4 SDRAM (4 × 32 GB), dual channel					4					
• 16 GB DDR4 SDRAM (2 × 8 GB), dual channel, TMP 2.0					5					
• 32 GB DDR4 SDRAM (2 × 16 GB), dual channel, TMP 2.0					6					
• 64 GB DDR4 SDRAM (2 × 32 GB), dual channel, TMP 2.0					7					
• 128 GB DDR4 SDRAM (4 × 32 GB), dual channel, TMP 2.0					8					
Software installation										
• Without preinstallation							8			
Operating system / Restore data storage medium										
• Windows 10 IoT Enterprise 2019 LTSC, MUI (en, de, fr, it, sp, ch), 64-bit, without Restore USB flash drive (for processor Core i3 / i5)[3]								A		
• Windows 10 IoT Enterprise 2019 LTSC, MUI (en, de, fr, it, sp, ch), 64-bit, with Restore USB flash drive (for processor Core i3 / i5)[3]								B		
• Windows 10 IoT Enterprise 2019 LTSC, MUI (en, de, fr, it, sp, ch), 64-bit, without Restore USB flash drive (for processor Core i7 / Xeon)[2]								C		
• Windows 10 IoT Enterprise 2019 LTSC, MUI (en, de, fr, it, sp, ch), 64-bit, with Restore USB flash drive (for processor Core i7 / Xeon)[2]								D		
• Windows Server IoT 2019 Standard Edition incl. 16-core, 5 clients, 64-bit, MUI (en, de, fr, it, sp, ch), without Restore USB flash drive[1]								P		
• Windows Server IoT 2019 Standard Edition incl. 16-core, 5 clients, 64-bit, MUI (en, de, fr, it, sp, ch), with Restore USB flash drive[1]								Q		
• Without operating system, without Restore USB flash drive								X		
Enclosure / Communication / Multi-monitor										
• Blue chromated enclosure, without expansions									A	
• Blue chromated enclosure, multi-monitor 4-5 displays, combined, onboard interfaces (2 x DP) + PCIe x16 graphics card (3 x mDP: 3 x adapter mDP to DP), 2 GB (1 slot occupied)									B	
• Blue chromated enclosure, BCE									C	
• Blue chromated enclosure, BCE, multi-monitor 4-5 displays, combined, onboard interfaces (2 x DP) + PCIe x16 graphics card (3 x mDP: 3 x adapter mDP to DP), 2 GB (1 slot occupied)									D	
• Blue chromated enclosure, Industrial Ethernet (CP1623), (1 slot occupied)									E	
• Blue chromated enclosure, Industrial Ethernet (CP1623), (1 slot occupied), multi-monitor 4-5 displays, combined, onboard interfaces (2 x DP) + PCIe x16 graphics card (3 x mDP: 3 x adapter mDP to DP), 2 GB (1 slot occupied)									F	
• Painted enclosure, without expansions									G	
• Painted enclosure, multi-monitor 4-5 displays, combined, onboard interfaces (2 x DP) + PCIe x16 graphics card (3 x mDP: 3 x adapter mDP to DP), 2 GB (1 slot occupied)									H	
• Painted enclosure, BCE									J	
• Painted enclosure, BCE, multi-monitor 4-5 displays, combined, onboard interfaces (2 x DP) + PCIe x16 graphics card (3 x mDP: 3 x adapter mDP to DP), 2 GB (1 slot occupied)									K	
• Painted enclosure, Industrial Ethernet (CP1623), (1 slot occupied)									L	
• Painted enclosure, Industrial Ethernet (CP1623), (1 slot occupied), multi-monitor 4-5 displays, combined, onboard interfaces (2 x DP) + PCIe x16 graphics card (3 x mDP: 3 x adapter mDP to DP), 2 GB (1 slot occupied)									M	
Power supply / power supply cord										
• 100/240 V AC industrial power supply unit										
- Without power supply cord										0

© Siemens AG 2024

Selection and ordering data (continued)

	Article No.
- Power supply cord for Europe	1
- Power supply cord for USA	2
- Power supply cord for China	3
• 2 x 100/240 V AC redundant industrial power supply unit	
- Without power supply cord	4
- Power supply cord for Europe	5
- Power supply cord for USA	6
- Power supply cord for China	7

1) Selection criterion "Processor / System type", Position U, V, W, cannot be combined with selection criterion "Operating system / Restore data storage medium", Position P, Q
2) Selection criterion "Processor / System type", Position U, V, cannot be combined with selection criterion "Operating system / Restore data storage medium", Position C, D
3) Selection criterion "Processor / System type", Position W, Y, cannot be combined with selection criterion "Operating system / Restore data storage medium", Position A, B
4) Selection criterion "Drives", Position X, cannot be combined with selection criterion "Drive cage / M.2 memory", Position 0, 4

Add-on/expansion components

Add-on/expansion components	
USB keyboard TKL-105 Color: black	
• Keyboard layout, German	6AV6881-0AU14-0AA0
• Keyboard layout, US International	6AV6881-0AU14-1AA0
SIMATIC HMI USB mouse Optical mouse with scroll wheel and USB connection, color anthracite	6AV2181-8AT00-0AX0
Memory expansion	
• 4 GB DDR4 SDRAM (1 × 4 GB)	6ES7648-2AL60-0QA0
• 8 GB DDR4 SDRAM (1 × 8 GB)	6ES7648-2AL70-0QA0
• 16 GB DDR4 SDRAM (1 × 16 GB)	6ES7648-2AL80-0QA0
• 32 GB DDR4 SDRAM (1 × 32 GB)	6ES7648-2AL81-0QA0
Retainer For locking the internal USB interface	6ES7648-1AA00-0XK0
Tray for low-profile removable drive bay For 3.5" hard disk (SATA/SAS) or 2.5" SSD (SATA), without drive	6ES7648-0EH00-1BA0
Adapter cable	
• DisplayPort to DVI-D for onboard graphics	6ES7648-3AF00-0XA0
• DisplayPort to VGA for onboard graphics	6ES7648-3AG00-0XA0

Add-on/expansion components	
• Mini DisplayPort to VGA for graphics card	6ES7648-3AL00-0XA0
• Mini DisplayPort to DVI-D for graphics card	6ES7648-3AK00-0XA0
• Mini DisplayPort to DVI-D for graphics card (3 units per pack)	6ES7648-3AK00-1XA0
• Mini DisplayPort to DisplayPort for graphics card	6ES7648-3AJ00-0XA0
• Mini DisplayPort to DisplayPort for graphics card (3 units per pack)	6ES7648-3AJ00-1XA0
Power supply cord, 3 m, for Rack PCs	
• Europe (for Austria, Belgium, Finland, France, Germany, the Netherlands, Spain, Sweden)	6ES7900-0AA00-0XA0
• For the UK	6ES7900-0BA00-0XA0
• For Switzerland	6ES7900-0CA00-0XA0
• For the USA	6ES7900-0DA00-0XA0
• For Italy	6ES7900-0EA00-0XA0
• For China	6ES7900-0FA00-0XA0
SIMATIC NET HARDNET IE S7 REDCONNECT PowerPack For communication with high-availability AS, see the "Industrial communication" section under "Industrial Ethernet – System connection PCS 7 systems".	

© Siemens AG 2024

Overview

SIMATIC IPC647E

Based on a SIMATIC Rack PC of type IPC647E, SIMATIC Process Control System IPCs in 19" format are extremely compact, rugged and powerful. They are UL-certified and have the CE mark for use in industry as well as residential, business and commercial environments. They are therefore ideally suited for use as a single station, server or client in the SIMATIC PCS 7 process control system. They enable high packing density in the control cabinet and save a significant amount of space in the control room due to their low overall height (2 HU).

© Siemens AG 2024

Design

The SIMATIC Process Control System IPCs of type IPC647E have a painted all-metal enclosure in 19" rack design (2 U), which is specially protected against dust by a filter and overpressure ventilation. This mechanically and electromechanically rugged enclosure has a service-friendly design.

SIMATIC Process Control System IPCs of type IPC647E are especially suitable for space-saving mounting in 500-mm deep 19" control cabinets due to their compact dimensions. They can be installed or positioned horizontally.

SIMATIC Process Control System IPCs of type IPC647E are suitable for reliable 24-hour continuous operation at ambient temperatures between 5 and 50 °C. Shocks up to 5 g and vibrations up to 0.5 g can be tolerated during operation.

Restore installations

The operating system and SIMATIC PCS 7 software are pre-installed on the SIMATIC Process Control System IPC. The table below shows the contents of the Restore installations and the pre-installed software for each version of the SIMATIC Process Control System IPC.

SIMATIC Process Control System IPC for PCS 7 V9.1	Restore installations	Pre-installed on delivery
ES/OS single station, OS client		
SIMATIC PCS 7 ES/OS single station, OS client IPC647E (IE or BCE)	Restore Image 1: Operating system Windows 10 IoT Enterprise 2019 LTSC 64-bit with default settings for optimal SIMATIC PCS 7 operation	–
	Restore Image 2:	Can be selected during commissioning
	• Operating system Windows 10 IoT Enterprise 2019 LTSC 64-bit plus software installation for operation as ES/OS single station	–
	• Operating system Windows 10 IoT Enterprise 2019 LTSC 64-bit plus software installation for operation as OS Client	●
Server		
SIMATIC PCS 7 OS Server IPC647E (IE or BCE)	Restore Image 1: Windows Server 2019 Standard Edition 64-bit operating system with default settings for optimal SIMATIC PCS 7 operation	–
	Restore Image 2:	Can be selected during commissioning
	• Operating system Windows Server 2019 Standard Edition 64-bit plus software installation for operation as OS Server	●
	• Operating system Windows Server 2019 Standard Edition 64-bit plus software installation for operation as engineering station	–
	• Operating system Windows Server 2019 Standard Edition 64-bit plus software installation for operation as SIMATIC PCS 7 Web Server	–

Individual configuration of SIMATIC Process Control System IPC

By selecting predefined equipment features, you can individually configure the SIMATIC Process Control System IPC with the desired article numbers. Selection tables for single station, server and client versions are available in the "Ordering data" section (paper catalog). An additional selection table enables you to order complete SIMATIC Process Control System IPCs as a replacement part.

The SIMATIC Process Control System IPC647E configurator in the Industry Mall allows you to interactively select and directly order the SIMATIC Process Control System IPC in the single station, server or client version – either directly for the system or as replacement part.

Individually configurable SIMATIC Process Control System IPCs are only manufactured after the order is received (built to order). Therefore the average delivery time for such an order is 15 working days.

© Siemens AG 2024

Selection and ordering data

Individually configurable SIMATIC Process Control System IPC647E

	Article No.									
SIMATIC Process Control System - IPC647E **For ES/OS Single Station, OS client** (RACK PC, 19", 2 U) Interfaces: 3 x Gbps Ethernet (IE/PN, RJ45); M.2 PCIe x4 (Key M) slot internal; 1 x DVI-D; 2 x DisplayPort; 1 x COM (RS 232, 9-pin); audio; 4 x USB3.1 Gen2 (Type A), 2 x USB3.1 Gen2 (Type C) on the rear side; 2 x USB3.1 Gen 1 (Type A) on the front; 1 x USB3.1 Gen2 (Type A) internal Temperature and fan monitoring, watchdog, card retainer	**6ES7661-** **0**	•	•	•	•	-	•	•	•	•
Processor and system type										
Core i5-8500 (6C/6T, 3.0 (4.1) GHz, 9 MB cache, TB, AMT)										
• Core i5-8500 (6C/6T, 3.0 (4.1) GHz, 9 MB cache, TB, AMT) - PCS 7 ES/OS single station, OS client[1)]		**A**								
Core i7-8700 (6C/12T, 3.2 (4.6) GHz, 12 MB cache, TB, AMT)										
• Core i7-8700 (6C/12T, 3.2 (4.6) GHz, 12 MB cache, TB, AMT) - PCS 7 ES/OS single station, OS client[1)]		**E**								
Xeon E-2176G (6C/12T, 3.7 (4.7) GHz, 12 MB cache, TB, AMT)										
• Xeon E-2176G (6C/12T, 3.7 (4.7) GHz, 12 MB cache, TB, AMT) - PCS 7 ES/OS single station, OS client		**J**								
Xeon E-2278GE (8C/16T, 3.3 (4.7) GHz, 16 MB cache, TB, AMT)										
• Xeon E-2278GE (8C/16T, 3.3 (4.7) GHz, 16 MB cache, TB, AMT) - PCS 7 ES/OS single station, OS client		**N**								
Drives:										
(HDD)										
• 1 TB HDD [Enterprise] 3.5" SATA			**A**							
• 2 TB HDD [Enterprise] 3.5" SATA			**B**							
• RAID1, 2 x 1 TB HDD [Enterprise] 3.5" SATA			**C**							
• RAID1, 2 x 2 TB HDD [Enterprise] 3.5" SATA			**D**							
SSD										
• 480 GB SSD 2.5" SATA			**P**							
• 960 GB SSD 2.5" SATA			**Q**							
• 1920 GB SSD 2.5" SATA			**R**							
• RAID1, 2 x 480 GB SSD 2.5" SATA			**S**							
• RAID1, 2 x 960 GB SSD 2.5" SATA			**T**							
• RAID1, 2 x 1920 GB SSD 2.5" SATA			**U**							
Without drives [2)]			**X**							
Drive cage / M.2 memory										
• Drive cage for internal installation, 0.5 g vibration, 5 g shock[2)]				**0**						
• Drive cage for internal installation, 0.5 g vibration, 5 g shock, 512 GB SSD M.2 NVMe (M.2 slot occupied) (for operating system)				**1**						
• Drive cage for internal installation, 0.5 g vibration, 5 g shock, 1024 GB SSD M.2 NVMe (M.2 slot occupied) (for operating system)				**2**						
• Drive cage for removable trays, on the front[2)]				**4**						
• Drive cage for removable trays, on the front, 512 GB SSD M.2 NVMe (M.2 slot occupied) (for operating system)				**5**						
• Drive cage for removable trays, on the front, 1024 GB SSD M.2 NVMe (M.2 slot occupied) (for operating system)				**6**						
Main memory										
• 8 GB DDR4 SDRAM (2 × 4 GB), dual channel					**0**					
• 16 GB DDR4 SDRAM (2 × 8 GB), dual channel					**1**					
• 32 GB DDR4 SDRAM (2 × 16 GB), dual channel					**2**					
• 64 GB DDR4 SDRAM (4 × 16 GB), dual channel					**3**					
• 128 GB DDR4 SDRAM (4 × 32 GB), dual channel					**4**					
• 16 GB DDR4 SDRAM (2 × 8 GB), ECC, dual channel, (only with Xeon processor)[1)]					**5**					
• 32 GB DDR4 SDRAM (2 × 16 GB), ECC, dual channel, (only with Xeon processor)[1)]					**6**					
• 64 GB DDR4 SDRAM (4 × 16 GB), ECC, dual channel, (only with Xeon processor)[1)]					**7**					
Software installation										
• PCS 7 V9.1 preinstalled							**1**			

© Siemens AG 2024

Selection and ordering data (continued)

	Article No.									
Operating system / Restore data storage medium / TPM										
• Windows 10 Enterprise 2019 LTSC, MUI (en, de, fr, it, sp, ch), 64-bit, without Restore USB flash drive								A		
• Windows 10 Enterprise 2019 LTSC, MUI (en, de, fr, it, sp, ch), 64-bit, without Restore USB flash drive, TPM 2.0 (not for China)								B		
• Windows 10 Enterprise 2019 LTSC, MUI (en, de, fr, it, sp, ch), 64-bit, with Restore USB flash drive								C		
• Windows 10 Enterprise 2019 LTSC, MUI (en, de, fr, it, sp, ch), 64-bit, with Restore USB flash drive, TPM 2.0 (not for China)								D		
Bus module / Communication / Multi-monitor										
• Bus module 4-slot: 2 x PCI, 2 x PCIe x16 (8 L)									A	
• Bus module 4-slot: 2 x PCI, 2 x PCIe x16 (8 L), multi-monitor 4-5 displays, combined, onboard interfaces (2 x DP) + PCIe x16 graphics card (3 x mDP: 3 x adapter mDP to DP), 2 GB (1 slot occupied)									B	
• Bus module 4-slot: 2 x PCI, 2 x PCIe x16 (8 L), BCE									C	
• Bus module 4-slot: 2 x PCI, 2 x PCIe x16 (8 L), BCE, multi-monitor 4-5 displays, combined, onboard interfaces (2 x DP) + PCIe x16 graphics card (3 x mDP: 3 x adapter mDP to DP), 2 GB (1 slot occupied)									D	
• Bus module 4-slot: 2 x PCI, 2 x PCIe x16 (8 L), Industrial Ethernet (CP1623), (1 slot occupied)									E	
• Bus module 4-slot: 2 x PCI, 2 x PCIe x16 (8 L), Industrial Ethernet (CP1623), (1 slot occupied), multi-monitor 4-5 displays, combined, onboard interfaces (2 x DP) + PCI x16 graphics card (3 x mDP: 3 x adapter mDP to DP), 2 GB (1 slot occupied)									F	
• Bus module 4-slot: 2 x PCIe x16 (8 L), 1 x PCIe x16 (4 L), 1 x PCIe x16 (1 L)									G	
• Bus module 4-slot: 2 x PCIe x16 (8 L), 1 x PCIe x16 (4 L), 1 x PCIe x16 (1 L), multi-monitor 4-5 screens, combined, onboard interfaces (2 x DP) + PCIe x16 graphics card (3 x mDP: 3 x adapter mDP to DP), 2 GB (1 slot occupied)									H	
• Bus module 4-slot: 2 x PCIe x16 (8 L), 1 x PCIe x16 (4 L), 1 x PCIe x16 (1 L), BCE									J	
• Bus module 4-slot: 2 x PCIe x16 (8 L), 1 x PCIe x16 (4 L), 1 x PCIe x16 (1 L), BCE, multi-monitor 4-5 screens, combined, onboard interfaces (2 x DP) + PCIe x16 graphics card (3 x mDP: 3 x adapter mDP to DP), 2 GB (1 slot occupied)									K	
• Bus module 4-slot: 2 x PCIe x16 (8 L), 1 x PCIe x16 (4 L), 1 x PCIe x16 (1 L), Industrial Ethernet (CP1623), (1 slot occupied)									L	
• Bus module 4-slot: 2 x PCIe x16 (8 L), 1 x PCIe x16 (4 L), 1 x PCIe x16 (1 L), Industrial Ethernet (CP1623), (1 slot occupied), multi-monitor 4-5 screens, combined, onboard interfaces (2 x DP) + PCIe x16 graphics card (3 x mDP: 3 x adapter mDP to DP), 2 GB (1 slot occupied)									M	
Power supply / power supply cord										
• 100/240 V AC industrial power supply unit										
- Without power supply cord										0
- Power supply cord for Europe										1
- Power supply cord for USA										2
- Power supply cord for China										3
• 2 x 100/240 V AC redundant industrial power supply unit										
- Without power supply cord										4
- Power supply cord for Europe										5
- Power supply cord for USA										6
- Power supply cord for China										7

1) Selection criterion "Processor / System type", Position A, E, cannot be combined with selection criterion "Main memory", Position 5, 6, 7
2) Selection criterion "Drives", Position X, cannot be combined with selection criterion "Drive cage / M.2 memory", Position 0, 4

	Article No.									
SIMATIC Process Control System - IPC647E **For OS Server, Engineering Server, Web Server** (RACK PC, 19", 2 U) Interfaces: 3 x Gbps Ethernet (IE/PN, RJ45); M.2 PCIe x4 (Key M) slot internal; 1 x DVI-D; 2 x DisplayPort; 1 x COM (RS 232, 9-pin); audio; 4 x USB3.1 Gen2 (Type A), 2 x USB3.1 Gen2 (Type C) on the rear side; 2 x USB3.1 Gen 1 (Type A) on the front; 1 x USB3.1 Gen2 (Type A) internal Temperature and fan monitoring, watchdog, card retainer	6ES7661- 0	•	•	•	•	-	•	•	•	•
Processor and system type										
Core i5-8500 (6C/6T, 3.0 (4.1) GHz, 9 MB cache, TB, AMT)										
• Core i5-8500 (6C/6T, 3.0 (4.1) GHz, 9 MB cache, TB, AMT) - PCS 7 OS Server, Engineering Server, Web Server[1]		B								
Core i7-8700 (6C/12T, 3.2 (4.6) GHz, 12 MB cache, TB, AMT)										
• Core i7-8700 (6C/12T, 3.2 (4.6) GHz, 12 MB cache, TB, AMT) - PCS 7 OS Server, Engineering Server, Web Server[1]		F								
Xeon E-2176G (6C/12T, 3.7 (4.7) GHz, 12 MB cache, TB, AMT)										
• Xeon E-2176G (6C/12T, 3.7 (4.7) GHz, 12 MB cache, TB, AMT) - PCS 7 OS Server, Engineering Server, Web Server		K								
Xeon E-2278GE (8C/16T, 3.3 (4.7) GHz, 16 MB cache, TB, AMT)										
• Xeon E-2278GE (8C/16T, 3.3 (4.7) GHz, 16 MB cache, TB, AMT) - PCS 7 OS Server, Engineering Server, Web Server		P								

© Siemens AG 2024

Selection and ordering data (continued)

	Article No.									
Drives:										
(HDD)										
• 1 TB HDD [Enterprise] 3.5" SATA			A							
• 2 TB HDD [Enterprise] 3.5" SATA			B							
• RAID1, 2 x 1 TB HDD [Enterprise] 3.5" SATA			C							
• RAID1, 2 x 2 TB HDD [Enterprise] 3.5" SATA			D							
HW RAID, SAS										
• RAID1, 2 x 2 TB HDD [Enterprise] 3.5" SAS; PCIe x8 RAID controller incl. ZMCP module (1 slot occupied)[2]			G							
SSD										
• 480 GB SSD 2.5" SATA			P							
• 960 GB SSD 2.5" SATA			Q							
• 1920 GB SSD 2.5" SATA			R							
• RAID1, 2 x 480 GB SSD 2.5" SATA			S							
• RAID1, 2 x 960 GB SSD 2.5" SATA			T							
• RAID1, 2 x 1920 GB SSD 2.5" SATA			U							
Without drives [3]			X							
Drive cage / M.2 memory										
• Drive cage for internal installation, 0.5 g vibration, 5 g shock[2][3]				0						
• Drive cage for internal installation, 0.5 g vibration, 5 g shock, 512 GB SSD M.2 NVMe (M.2 slot occupied) (for operating system)[2]				1						
• Drive cage for internal installation, 0.5 g vibration, 5 g shock, 1024 GB SSD M.2 NVMe (M.2 slot occupied) (for operating system)[2]				2						
• Drive cage for removable trays, on the front[3]				4						
• Drive cage for removable trays, on the front, 512 GB SSD M.2 NVMe (M.2 slot occupied) (for operating system)				5						
• Drive cage for removable trays, on the front, 1024 GB SSD M.2 NVMe (M.2 slot occupied) (for operating system)				6						
Main memory										
• 8 GB DDR4 SDRAM (2 × 4 GB), dual channel					0					
• 16 GB DDR4 SDRAM (2 × 8 GB), dual channel					1					
• 32 GB DDR4 SDRAM (2 × 16 GB), dual channel					2					
• 64 GB DDR4 SDRAM (4 × 16 GB), dual channel					3					
• 128 GB DDR4 SDRAM (4 × 32 GB), dual channel					4					
• 16 GB DDR4 SDRAM (2 × 8 GB), ECC, dual channel, (only with Xeon processor)[1]					5					
• 32 GB DDR4 SDRAM (2 × 16 GB), ECC, dual channel, (only with Xeon processor)[1]					6					
• 64 GB DDR4 SDRAM (4 × 16 GB), ECC, dual channel, (only with Xeon processor)[1]					7					
Software installation										
• PCS 7 V9.1 preinstalled							1			
Operating system / Restore data storage medium / TPM										
• Windows Server 2019 Standard Edition incl. 16-core, 5 clients, 64-bit, MUI (en, de, fr, it, sp, ch), without Restore USB flash drive								P		
• Windows Server 2019 Standard Edition incl. 16-core, 5 clients, 64-bit, MUI (en, de, fr, it, sp, ch), without Restore USB flash drive, TPM 2.0 (not for China)								Q		
• Windows Server 2019 Standard Edition incl. 16-core, 5 clients, 64-bit, MUI (en, de, fr, it, sp, ch), with Restore USB flash drive								R		
• Windows Server 2019 Standard Edition incl. 16-core, 5 clients, 64-bit, MUI (en, de, fr, it, sp, ch), with Restore USB flash drive, TPM 2.0 (not for China)								S		
Bus module / Communication / Multi-monitor										
• Bus module 4-slot: 2 x PCI, 2 x PCIe x16 (8 L)									A	
• Bus module 4-slot: 2 x PCI, 2 x PCIe x16 (8 L), multi-monitor 4-5 displays, combined, onboard interfaces (2 x DP) + PCIe x16 graphics card (3 x mDP: 3 x adapter mDP to DP), 2 GB (1 slot occupied)									B	
• Bus module 4-slot: 2 x PCI, 2 x PCIe x16 (8 L), BCE									C	
• Bus module 4-slot: 2 x PCI, 2 x PCIe x16 (8 L), BCE, multi-monitor 4-5 displays, combined, onboard interfaces (2 x DP) + PCIe x16 graphics card (3 x mDP: 3 x adapter mDP to DP), 2 GB (1 slot occupied)									D	
• Bus module 4-slot: 2 x PCI, 2 x PCIe x16 (8 L), Industrial Ethernet (CP1623), (1 slot occupied)									E	

© Siemens AG 2024

Selection and ordering data (continued)

	Article No.									
• Bus module 4-slot: 2 x PCI, 2 x PCIe x16 (8 L), Industrial Ethernet (CP1623), (1 slot occupied), multi-monitor 4-5 displays, combined, onboard interfaces (2 x DP) + PCI x16 graphics card (3 x mDP: 3 x adapter mDP to DP), 2 GB (1 slot occupied)[2]									F	
• Bus module 4-slot: 2 x PCIe x16 (8 L), 1 x PCIe x16 (4 L), 1 x PCIe x16 (1 L)									G	
• Bus module 4-slot: 2 x PCIe x16 (8 L), 1 x PCIe x16 (4 L), 1 x PCIe x16 (1 L), multi-monitor 4-5 screens, combined, onboard interfaces (2 x DP) + PCIe x16 graphics card (3 x mDP: 3 x adapter mDP to DP), 2 GB (1 slot occupied)									H	
• Bus module 4-slot: 2 x PCIe x16 (8 L), 1 x PCIe x16 (4 L), 1 x PCIe x16 (1 L), BCE									J	
• Bus module 4-slot: 2 x PCIe x16 (8 L), 1 x PCIe x16 (4 L), 1 x PCIe x16 (1 L), BCE, multi-monitor 4-5 screens, combined, onboard interfaces (2 x DP) + PCIe x16 graphics card (3 x mDP: 3 x adapter mDP to DP), 2 GB (1 slot occupied)									K	
• Bus module 4-slot: 2 x PCIe x16 (8 L), 1 x PCIe x16 (4 L), 1 x PCIe x16 (1 L), Industrial Ethernet (CP1623), (1 slot occupied)									L	
• Bus module 4-slot: 2 x PCIe x16 (8 L), 1 x PCIe x16 (4 L), 1 x PCIe x16 (1 L), Industrial Ethernet (CP1623), (1 slot occupied), multi-monitor 4-5 screens, combined, onboard interfaces (2 x DP) + PCIe x16 graphics card (3 x mDP: 3 x adapter mDP to DP), 2 GB (1 slot occupied)									M	
Power supply / power supply cord										
• 100/240 V AC industrial power supply unit										
- Without power supply cord										0
- Power supply cord for Europe										1
- Power supply cord for USA										2
- Power supply cord for China										3
• 2 x 100/240 V AC redundant industrial power supply unit										
- Without power supply cord										4
- Power supply cord for Europe										5
- Power supply cord for USA										6
- Power supply cord for China										7

1) Selection criterion "Processor / System type", Position B, F, cannot be combined with selection criterion "Main memory", Position 5, 6, 7
2) Selection criterion "Drives", Position G, cannot be combined with selection criterion "Drive cage / M.2 memory", Position 0, 1, 2, or with selection criterion "Bus module / Communication / Multi-monitor", Position F
3) Selection criterion "Drives", Position X, cannot be combined with selection criterion "Drive cage / M.2 memory", Position 0, 4

SIMATIC Process Control System IPC647E as spare part

	Article No.									
SIMATIC Process Control System - IPC647E	**6ES7661-**									
spare part (RACK PC, 19", 2 U) Interfaces: 3 x Gbps Ethernet (IE/PN, RJ45); M.2 PCIe x4 (Key M) slot internal; 1 x DVI-D; 2 x DisplayPort; 1 x COM (RS 232, 9-pin); audio; 4 x USB3.1 Gen2 (Type A), 2 x USB3.1 Gen2 (Type C) on the rear side; 2 x USB3.1 Gen 1 (Type A) on the front; 1 x USB3.1 Gen2 (Type A) internal Temperature and fan monitoring, watchdog, card retainer	0	•	•	•	•	-	•	•	•	•
Processor and system type										
Core i5-8500 (6C/6T, 3.0 (4.1) GHz, 9 MB cache, TB, AMT)										
• Core i5-8500 (6C/6T, 3.0 (4.1) GHz, 9 MB cache, TB, AMT) - spare part[1]		V								
Core i7-8700 (6C/12T, 3.2 (4.6) GHz, 12 MB cache, TB, AMT)										
• Core i7-8700 (6C/12T, 3.2 (4.6) GHz, 12 MB cache, TB, AMT) - spare part[1]		W								
Xeon E-2176G (6C/12T, 3.7 (4.7) GHz, 12 MB cache, TB, AMT)										
• Xeon E-2176G (6C/12T, 3.7 (4.7) GHz, 12 MB cache, TB, AMT) - spare part		X								
Xeon E-2278GE (8C/16T, 3.3 (4.7) GHz, 16 MB cache, TB, AMT)										
• Xeon E-2278GE (8C/16T, 3.3 (4.7) GHz, 16 MB cache, TB, AMT) - spare part		Y								
Drives:										
(HDD)										
• 1 TB HDD [Enterprise] 3.5" SATA			A							
• 2 TB HDD [Enterprise] 3.5" SATA			B							
• RAID1, 2 x 1 TB HDD [Enterprise] 3.5" SATA			C							
• RAID1, 2 x 2 TB HDD [Enterprise] 3.5" SATA			D							
HW RAID, SAS										
• RAID1, 2 x 2 TB HDD [Enterprise] 3.5" SAS; PCIe x8 RAID controller incl. ZMCP module (1 slot occupied)[2]			G							
SSD										

© Siemens AG 2024

Selection and ordering data (continued)

	Article No.									
• 480 GB SSD 2.5" SATA			P							
• 960 GB SSD 2.5" SATA			Q							
• 1920 GB SSD 2.5" SATA			R							
• RAID1, 2 x 480 GB SSD 2.5" SATA			S							
• RAID1, 2 x 960 GB SSD 2.5" SATA			T							
• RAID1, 2 x 1920 GB SSD 2.5" SATA			U							
Without drives [3]			X							
Drive cage / M.2 memory										
• Drive cage for internal installation, 0.5 g vibration, 5 g shock[2][3]				0						
• Drive cage for internal installation, 0.5 g vibration, 5 g shock, 512 GB SSD M.2 NVMe (M.2 slot occupied) (for operating system)[2]				1						
• Drive cage for internal installation, 0.5 g vibration, 5 g shock, 1024 GB SSD M.2 NVMe (M.2 slot occupied) (for operating system)[2]				2						
• Drive cage for removable trays, on the front[3]				4						
• Drive cage for removable trays, on the front, 512 GB SSD M.2 NVMe (M.2 slot occupied) (for operating system)				5						
• Drive cage for removable trays, on the front, 1024 GB SSD M.2 NVMe (M.2 slot occupied) (for operating system)				6						
Main memory										
• 8 GB DDR4 SDRAM (2 × 4 GB), dual channel					0					
• 16 GB DDR4 SDRAM (2 × 8 GB), dual channel					1					
• 32 GB DDR4 SDRAM (2 × 16 GB), dual channel					2					
• 64 GB DDR4 SDRAM (4 × 16 GB), dual channel					3					
• 128 GB DDR4 SDRAM (4 × 32 GB), dual channel					4					
• 16 GB DDR4 SDRAM (2 × 8 GB), ECC, dual channel, (only with Xeon processor)[1]					5					
• 32 GB DDR4 SDRAM (2 × 16 GB), ECC, dual channel, (only with Xeon processor)[1]					6					
• 64 GB DDR4 SDRAM (4 × 16 GB), ECC, dual channel, (only with Xeon processor)[1]					7					
Software installation										
• Without preinstallation							8			
Operating system / Restore data storage medium / TPM										
• Windows 10 Enterprise 2019 LTSC, MUI (en, de fr, it, sp, ch), 64-bit, without Restore USB flash drive[2]								A		
• Windows 10 Enterprise 2019 LTSC, MUI (en, de fr, it, sp, ch), 64-bit, without Restore USB flash drive, TPM 2.0 (not for China)[2]								B		
• Windows 10 Enterprise 2019 LTSC, MUI (en, de fr, it, sp, ch), 64-bit, with Restore USB flash drive[2]								C		
• Windows 10 Enterprise 2019 LTSC, MUI (en, de fr, it, sp, ch), 64-bit, with Restore USB flash drive, TPM 2.0 (not for China)[2]								D		
• Windows Server 2019 Standard Edition incl. 16-core, 5 clients, 64-bit, MUI (en, de, fr, it, sp, ch), without Restore USB flash drive								P		
• Windows Server 2019 Standard Edition incl. 16-core, 5 clients, 64-bit, MUI (en, de, fr, it, sp, ch), without Restore USB flash drive, TPM 2.0 (not for China)								Q		
• Windows Server 2019 Standard Edition incl. 16-core, 5 clients, 64-bit, MUI (en, de, fr, it, sp, ch), with Restore USB flash drive								R		
• Windows Server 2019 Standard Edition incl. 16-core, 5 clients, 64-bit, MUI (en, de, fr, it, sp, ch), with Restore USB flash drive, TPM 2.0 (not for China)								S		
• Without operating system, without Restore USB flash drive								X		
Bus module / Communication / Multi-monitor										
• Bus module 4-slot: 2 x PCI, 2 x PCIe x16 (8 L)									A	
• Bus module 4-slot: 2 x PCI, 2 x PCIe x16 (8 L), multi-monitor 4-5 displays, combined, onboard interfaces (2 x DP) + PCIe x16 graphics card (3 x mDP: 3 x adapter mDP to DP), 2 GB (1 slot occupied)									B	
• Bus module 4-slot: 2 x PCI, 2 x PCIe x16 (8 L), BCE									C	
• Bus module 4-slot: 2 x PCI, 2 x PCIe x16 (8 L), BCE, multi-monitor 4-5 displays, combined, onboard interfaces (2 x DP) + PCIe x16 graphics card (3 x mDP: 3 x adapter mDP to DP), 2 GB (1 slot occupied)									D	
• Bus module 4-slot: 2 x PCI, 2 x PCIe x16 (8 L), Industrial Ethernet (CP1623), (1 slot occupied)									E	
• Bus module 4-slot: 2 x PCI, 2 x PCIe x16 (8 L), Industrial Ethernet (CP1623), (1 slot occupied), multi-monitor 4-5 displays, combined, onboard interfaces (2 x DP) + PCI x16 graphics card (3 x mDP: 3 x adapter mDP to DP), 2 GB (1 slot occupied)[2]									F	
• Bus module 4-slot: 2 x PCIe x16 (8 L), 1 x PCIe x16 (4 L), 1 x PCIe x16 (1 L)									G	
• Bus module 4-slot: 2 x PCIe x16 (8 L), 1 x PCIe x16 (4 L), 1 x PCIe x16 (1 L), multi-monitor 4-5 screens, combined, onboard interfaces (2 x DP) + PCIe x16 graphics card (3 x mDP: 3 x adapter mDP to DP), 2 GB (1 slot occupied)									H	

© Siemens AG 2024

Selection and ordering data (continued)

	Article No.									
• Bus module 4-slot: 2 x PCIe x16 (8 L), 1 x PCIe x16 (4 L), 1 x PCIe x16 (1 L), BCE									J	
• Bus module 4-slot: 2 x PCIe x16 (8 L), 1 x PCIe x16 (4 L), 1 x PCIe x16 (1 L), BCE, multi-monitor 4-5 screens, combined, onboard interfaces (2 x DP) + PCIe x16 graphics card (3 x mDP: 3 x adapter mDP to DP), 2 GB (1 slot occupied)									K	
• Bus module 4-slot: 2 x PCIe x16 (8 L), 1 x PCIe x16 (4 L), 1 x PCIe x16 (1 L), Industrial Ethernet (CP1623), (1 slot occupied)									L	
• Bus module 4-slot: 2 x PCIe x16 (8 L), 1 x PCIe x16 (4 L), 1 x PCIe x16 (1 L), Industrial Ethernet (CP1623), (1 slot occupied), multi-monitor 4-5 screens, combined, onboard interfaces (2 x DP) + PCIe x16 graphics card (3 x mDP: 3 x adapter mDP to DP), 2 GB (1 slot occupied)									M	
Power supply / power supply cord										
• 100/240 V AC industrial power supply unit										
- Without power supply cord										0
- Power supply cord for Europe										1
- Power supply cord for USA										2
- Power supply cord for China										3
• 2 x 100/240 V AC redundant industrial power supply unit										
- Without power supply cord										4
- Power supply cord for Europe										5
- Power supply cord for USA										6
- Power supply cord for China										7

1) Selection criterion "Processor / System type", Position V, W, cannot be combined with selection criterion "Main memory", Position 5, 6, 7
2) Selection criterion "Drives", Position G, cannot be combined with selection criterion "Drive cage / M.2 memory", Position 0, 1, 2, with selection criterion "Operating system / Restore data storage medium / TPM", Position A, B, C, D, or with selection criterion "Bus module / Communication / Multi-monitor", Position F
3) Selection criterion "Drives", Position X, cannot be combined with selection criterion "Drive cage / M.2 memory", Position 0, 4

Add-on/expansion components

Add-on/expansion components	
USB keyboard TKL-105 Color: black	
• Keyboard layout, German	6AV6881-0AU14-0AA0
• Keyboard layout, US International	6AV6881-0AU14-1AA0
SIMATIC HMI USB mouse Optical mouse with scroll wheel and USB connection, color anthracite	6AV2181-8AT00-0AX0
Memory expansion	
• 4 GB DDR4 SDRAM (1 × 4 GB)	6ES7648-2AL60-0QA0
• 8 GB DDR4 SDRAM (1 × 8 GB)	6ES7648-2AL70-0QA0
• 16 GB DDR4 SDRAM (1 × 16 GB)	6ES7648-2AL80-0QA0
• 32 GB DDR4 SDRAM (1 × 32 GB)	6ES7648-2AL81-0QA0
Retainer For locking the internal USB interface	6ES7648-1AA00-0XK0
Tray for low-profile removable drive bay For 3.5" hard disk (SATA/SAS) or 2.5" SSD (SATA), without drive	6ES7648-0EH00-1BA0
Adapter cable	
• DisplayPort to DVI-D for onboard graphics	6ES7648-3AF00-0XA0
• DisplayPort to VGA for onboard graphics	6ES7648-3AG00-0XA0

Add-on/expansion components	
• Mini DisplayPort to VGA for graphics card	6ES7648-3AL00-0XA0
• Mini DisplayPort to DVI-D for graphics card	6ES7648-3AK00-0XA0
• Mini DisplayPort to DVI-D for graphics card (3 units per pack)	6ES7648-3AK00-1XA0
• Mini DisplayPort to DisplayPort for graphics card	6ES7648-3AJ00-0XA0
• Mini DisplayPort to DisplayPort for graphics card (3 units per pack)	6ES7648-3AJ00-1XA0
Power supply cord, 3 m, for Rack PCs	
• Europe (for Austria, Belgium, Finland, France, Germany, the Netherlands, Spain, Sweden)	6ES7900-0AA00-0XA0
• For the UK	6ES7900-0BA00-0XA0
• For Switzerland	6ES7900-0CA00-0XA0
• For the USA	6ES7900-0DA00-0XA0
• For Italy	6ES7900-0EA00-0XA0
• For China	6ES7900-0FA00-0XA0
SIMATIC NET HARDNET IE S7 REDCONNECT PowerPack For communication with high-availability AS, see the "Industrial communication" section under "Industrial Ethernet – System connection PCS 7 systems".	

© Siemens AG 2024

Accessories

Power supply cord for Rack PC

The SIMATIC PCS 7 preferred types are always delivered with a "European power supply cord". This can be used in Germany, France, Spain, Netherlands, Belgium, Sweden, Austria and Finland.

The country-specific versions listed in the Ordering data are required for other countries. The following picture shows the design of a number of power supply plugs:

Country-specific power supply cords for Rack PC

© Siemens AG 2024

Overview

SIMATIC IPC847E

The SIMATIC Process Control System IPC type IPC847E is the most powerful and well equipped system platform. It satisfies all requirements for implementing complex server applications and for archiving process data.

Many basic components, such as chip set, processor, work memory, etc. are largely identical to those of type IPC647E. As a result of the double overall height, the SIMATIC Process Control System IPC of type IPC847E has more slots and therefore ample potential for expansions. Since it would be over-dimensioned as a client, it is only offered as a single station and server.

© Siemens AG 2024

Design

SIMATIC Process Control System IPCs type IPC847E are UL-certified and have the CE marking for use in industry as well as residential, business and commercial environments.

The painted all-metal enclosure in 19" mounting format (4 Us) is especially protected against dust by a filter and overpressure ventilation. It features a mechanically and electromagnetically rugged design and is very easy to service.

The SIMATIC Process Control System IPC of type IPC847E can be positioned and installed horizontally or vertically. Using an optional tower kit, the Rack PC can be converted into an industry tower. The dimensions of the IPC847E also allow space-saving assembly in 500-mm deep 19" control cabinets.

SIMATIC Process Control System IPCs type IPC847E are suitable for reliable 24-hour continuous operation at ambient temperatures between 5 and 50 °C. Shocks up to 5 g and vibrations up to 0.5 g can be tolerated during operation.

Restore installations

The operating system and SIMATIC PCS 7 software are pre-installed on the SIMATIC Process Control System IPC. The table below shows the contents of the Restore installations and the pre-installed software for each version of the SIMATIC Process Control System IPC.

SIMATIC Process Control System IPC for PCS 7 V9.1	Restore installations	Pre-installed on delivery
ES/OS single station, OS client		
SIMATIC PCS 7 ES/OS single station OS client IPC847E (IE or BCE)	Restore Image 1: Operating system Windows 10 IoT Enterprise 2019 LTSC 64-bit with default settings for optimal SIMATIC PCS 7 operation	–
	Restore Image 2:	Can be selected during commissioning
	• Operating system Windows 10 IoT Enterprise 2019 LTSC 64-bit plus software installation for operation as ES/OS single station	–
	• Operating system Windows 10 IoT Enterprise 2019 LTSC 64-bit plus software installation for operation as OS Client	●
Server		
SIMATIC PCS 7 OS Server IPC847E (IE or BCE)	Restore Image 1: Windows Server 2019 Standard Edition 64-bit operating system with default settings for optimal SIMATIC PCS 7 operation	–
	Restore Image 2:	Can be selected during commissioning
	• Operating system Windows Server 2019 Standard Edition 64-bit plus software installation for operation as OS Server	●
	• Operating system Windows Server 2019 Standard Edition 64-bit plus software installation for operation as engineering station	–
	• Operating system Windows Server 2019 Standard Edition 64-bit plus software installation for operation as SIMATIC PCS 7 Web Server	–

Individual configuration of SIMATIC Process Control System IPC

By selecting predefined equipment features, you can individually configure the SIMATIC Process Control System IPC with the desired article numbers. Selection tables for single station, server and client are available for this in the "Ordering data" (paper catalog) section. An additional selection table enables you to order complete SIMATIC Process Control System IPCs as a replacement part.

The SIMATIC Process Control System IPC847E configurator in the Industry Mall allows you to interactively select and directly order the SIMATIC Process Control System IPC in the single station or server version – either directly for the system or as replacement part.

Individually configurable SIMATIC Process Control System IPCs are only manufactured after the order is received (built to order). Therefore the average delivery time for such an order is 15 working days.

© Siemens AG 2024

Selection and ordering data

Individually configurable SIMATIC Process Control System IPC847E

	Article No.									
SIMATIC Process Control System - IPC847E **For ES/OS single station, OS client** (RACK PC, 19", 4 U) Interfaces: 3 x Gbps Ethernet (IE/PN, RJ45); 1 x DVI-D; 2 x DisplayPort; 1 x COM (RS 232, 9-pin); audio; 4 x USB3.1 Gen2 (Type A), 2 x USB3.1 Gen2 (Type C) on the rear side; 2 x USB3.1 Gen 1 (Type A) on the front; 1 x USB3.1 Gen2 (Type A) internal Temperature and fan monitoring, watchdog, card retainer	**6ES7661-** **1**	•	•	•	•	-	•	•	•	•
Processor and system type										
Core i5-8500 (6C/6T, 3.0 (4.1) GHz, 9 MB cache, TB, AMT)										
• Core i5-8500 (6C/6T, 3.0 (4.1) GHz, 9 MB cache, TB, AMT) - PCS 7 ES/OS single station, OS client[1)]		**A**								
Core i7-8700 (6C/12T, 3.2 (4.6) GHz, 12 MB cache, TB, AMT)										
• Core i7-8700 (6C/12T, 3.2 (4.6) GHz, 12 MB cache, TB, AMT) - PCS 7 ES/OS single station, OS client[1)]		**E**								
Xeon E-2176G (6C/12T, 3.7 (4.7) GHz, 12 MB cache, TB, AMT)										
• Xeon E-2176G (6C/12T, 3.7 (4.7) GHz, 12 MB cache, TB, AMT) - PCS 7 ES/OS single station, OS client		**J**								
Xeon E-2278GE (8C/16T, 3.3 (4.7) GHz, 16 MB cache, TB, AMT)										
• Xeon E-2278GE (8C/16T, 3.3 (4.7) GHz, 16 MB cache, TB, AMT) - PCS 7 ES/OS single station, OS client		**N**								
Drives:										
(HDD)										
• 1 TB HDD [Enterprise] 3.5" SATA			**A**							
• 2 TB HDD [Enterprise] 3.5" SATA			**B**							
• RAID1, 2 x 1 TB HDD [Enterprise] 3.5" SATA			**C**							
• RAID1, 2 x 2 TB HDD [Enterprise] 3.5" SATA			**D**							
• RAID1, 2 x 2 TB HDD [Enterprise] 3.5" SATA + 2 TB HDD [Enterprise] 3.5" SATA as HotSpare			**E**							
• RAID1, 2 x 2 TB HDD [Enterprise] 3.5" SATA + 480 GB 2.5" SSD SATA (for operating system if M.2 SSD not ordered)			**F**							
SSD										
• 480 GB SSD 2.5" SATA			**P**							
• 960 GB SSD 2.5" SATA			**Q**							
• 1920 GB SSD 2.5" SATA			**R**							
• RAID1, 2 x 480 GB SSD 2.5" SATA			**S**							
• RAID1, 2 x 960 GB SSD 2.5" SATA			**T**							
• RAID1, 2 x 1920 GB SSD 2.5" SATA			**U**							
• RAID5, approx. 3.8 TB (3 x 1920 GB SSD 2.5" SATA)			**V**							
• RAID5, approx. 5.7 TB (4 x 1920 GB SSD 2.5" SATA)[2)]			**W**							
Without drives [3)]			**X**							
Drive cage / M.2 memory										
• Drive cage for internal installation, 0.5 g vibration, 5 g shock[2)3)]				**0**						
• Drive cage for internal installation, 0.5 g vibration, 5 g shock, 512 GB SSD M.2 NVMe on PCIe x4 adapter card (1 slot occupied) (for operating system)[2)]				**1**						
• Drive cage for internal installation, 0.5 g vibration, 5 g shock, 1024 GB SSD M.2 NVMe on PCIe x4 adapter card (1 slot occupied) (for operating system)[2)]				**2**						
• Drive cage for removable trays, on the front[3)]				**4**						
• Drive cage for removable trays, on the front, 512 GB SSD M.2 NVMe on PCIe x4 adapter card (1 slot occupied) (for operating system)				**5**						
• Drive cage for removable trays, on the front, 1024 GB SSD M.2 NVMe on PCIe x4 adapter card (1 slot occupied) (for operating system)				**6**						
Main memory										
• 8 GB DDR4 SDRAM (2 × 4 GB), dual channel					**0**					
• 16 GB DDR4 SDRAM (2 × 8 GB), dual channel					**1**					
• 32 GB DDR4 SDRAM (2 × 16 GB), dual channel					**2**					
• 64 GB DDR4 SDRAM (4 × 16 GB), dual channel					**3**					
• 128 GB DDR4 SDRAM (4 × 32 GB), dual channel					**4**					

© Siemens AG 2024

Selection and ordering data (continued)

	Article No.									
• 16 GB DDR4 SDRAM (2 × 8 GB), ECC, dual channel, (only with Xeon processor)[1]					5					
• 32 GB DDR4 SDRAM (2 × 16 GB), ECC, dual channel, (only with Xeon processor)[1]					6					
• 64 GB DDR4 SDRAM (4 × 16 GB), ECC, dual channel, (only with Xeon processor)[1]					7					
Software installation										
• PCS 7 V9.1 preinstalled							1			
Operating system / Restore data storage medium / TPM										
• Windows 10 Enterprise 2019 LTSC, MUI (en, de, fr, it, sp, ch), 64-bit, without Restore USB flash drive								A		
• Windows 10 Enterprise 2019 LTSC, MUI (en, de, fr, it, sp, ch), 64-bit, without Restore USB flash drive, TPM 2.0 (not for China)								B		
• Windows 10 Enterprise 2019 LTSC, MUI (en, de, fr, it, sp, ch), 64-bit, with Restore USB flash drive								C		
• Windows 10 Enterprise 2019 LTSC, MUI (en, de, fr, it, sp, ch), 64-bit, with Restore USB flash drive, TPM 2.0 (not for China)								D		
Bus module / Communication / Multi-monitor										
• Bus module 11-slot: 3 x PCI, 1 x PCIe x16 (8 L), 5 x PCIe x16 (4 L), 2 x PCIe x4 (4 L)									A	
• Bus module 11-slot: 3 x PCI, 1 x PCIe x16 (8 L), 5 x PCIe x16 (4 L), 2 x PCIe x4 (4 L), multi-monitor 4-5 screens, combined, onboard interfaces (2 x DP) + PCIe x16 graphics card (3 x mDP: 3 x adapter mDP to DP), 2 GB (1 slot occupied)									B	
• Bus module 11-slot: 3 x PCI, 1 x PCIe x16 (8 L), 5 x PCIe x16 (4 L), 2 x PCIe x4 (4 L), BCE									C	
• Bus module 11-slot: 3 x PCI, 1 x PCIe x16 (8 L), 5 x PCIe x16 (4 L), 2 x PCIe x4 (4 L), BCE, multi-monitor 4-5 screens, combined, onboard interfaces (2 x DP) + PCIe x16 graphics card (3 x mDP: 3 x adapter mDP to DP), 2 GB (1 slot occupied)									D	
• Bus module 11-slot: 3 x PCI, 1 x PCIe x16 (8 L), 5 x PCIe x16 (4 L), 2 x PCIe x4 (4 L), Industrial Ethernet (CP1623), (1 slot occupied)									E	
• Bus module 11-slot: 3 x PCI, 1 x PCIe x16 (8 L), 5 x PCIe x16 (4 L), 2 x PCIe x4 (4 L), Industrial Ethernet (CP1623), (1 slot occupied), multi-monitor 4-5 screens, combined, onboard interfaces (2 x DP) + PCIe x16 graphics card (3 x mDP: 3 x adapter mDP to DP), 2 GB (1 slot occupied)									F	
Power supply / power supply cord										
• 100/240 V AC industrial power supply unit										
- Without power supply cord										0
- Power supply cord for Europe										1
- Power supply cord for USA										2
- Power supply cord for China										3
• 2 x 100/240 V AC redundant industrial power supply unit										
- Without power supply cord										4
- Power supply cord for Europe										5
- Power supply cord for USA										6
- Power supply cord for China										7

1) Selection criterion "Processor / System type", Position A, E, cannot be combined with selection criterion "Main memory", Position 5, 6, 7
2) Selection criterion "Drives", Position W, cannot be combined with selection criterion "Drive cage / M.2 memory", Position 0, 1, 2
3) Selection criterion "Drives", Position X, cannot be combined with selection criterion "Drive cage / M.2 memory", Position 0, 4

	Article No.									
SIMATIC Process Control System - IPC847E **For OS Server, Engineering Server, Web Server** (RACK PC, 19", 4 U) Interfaces: 3 x Gbps Ethernet (IE/PN, RJ45); 1 x DVI-D; 2 x DisplayPort; 1 x COM (RS 232, 9-pin); audio; 4 x USB3.1 Gen2 (Type A), 2 x USB3.1 Gen2 (Type C) on the rear side; 2 x USB3.1 Gen 1 (Type A) on the front; 1 x USB3.1 Gen2 (Type A) internal Temperature and fan monitoring, watchdog, card retainer	**6ES7661-** 1	•	•	•	•	-	•	•	•	•
Processor and system type										
Core i5-8500 (6C/6T, 3.0 (4.1) GHz, 9 MB cache, TB, AMT)										
• Core i5-8500 (6C/6T, 3.0 (4.1) GHz, 9 MB cache, TB, AMT) - PCS 7 OS Server, Engineering Server, Web Server[1]		B								
Core i7-8700 (6C/12T, 3.2 (4.6) GHz, 12 MB cache, TB, AMT)										
• Core i7-8700 (6C/12T, 3.2 (4.6) GHz, 12 MB cache, TB, AMT) - PCS 7 OS Server, Engineering Server, Web Server[1]		F								
Xeon E-2176G (6C/12T, 3.7 (4.7) GHz, 12 MB cache, TB, AMT)										
• Xeon E-2176G (6C/12T, 3.7 (4.7) GHz, 12 MB cache, TB, AMT) - PCS 7 OS Server, Engineering Server, Web Server		K								
Xeon E-2278GE (8C/16T, 3.3 (4.7) GHz, 16 MB cache, TB, AMT)										
• Xeon E-2278GE (8C/16T, 3.3 (4.7) GHz, 16 MB cache, TB, AMT) - PCS 7 OS Server, Engineering Server, Web Server		P								

© Siemens AG 2024

Selection and ordering data (continued)

	Article No.								
Drives:									
(HDD)									
• 1 TB HDD [Enterprise] 3.5" SATA			A						
• 2 TB HDD [Enterprise] 3.5" SATA			B						
• RAID1, 2 x 1 TB HDD [Enterprise] 3.5" SATA			C						
• RAID1, 2 x 2 TB HDD [Enterprise] 3.5" SATA			D						
• RAID1, 2 x 2 TB HDD [Enterprise] 3.5" SATA + 2 TB HDD [Enterprise] 3.5" SATA as HotSpare			E						
• RAID1, 2 x 2 TB HDD [Enterprise] 3.5" SATA + 480 GB 2.5" SSD SATA (for operating system if M.2 SSD not ordered)			F						
HW RAID, SAS									
• RAID1, 2 x 2 TB HDD [Enterprise] 3.5" SAS; PCIe x8 RAID controller incl. ZMCP module (1 slot occupied)[2]			G						
• RAID1, 2 x 2 TB HDD [Enterprise] 3.5" SAS; PCIe x8 RAID controller incl. ZMCP module (1 slot occupied) + 480 GB SSD 2.5" SATA[2]			H						
• RAID5, 4 TB (3 x 2 TB HDD [Enterprise] 3.5" SAS); PCIe x8 RAID controller incl. ZMCP module (1 slot occupied)[2]			J						
• RAID5, 4 TB (3 x 2 TB HDD [Enterprise] 3.5" SAS) + 2 TB HDD [Enterprise] 3.5" SAS as HotSpare, PCIe x8 RAID controller incl. ZMCP module (1 slot occupied)[2]			K						
• RAID5, 6 TB (4 x 2 TB HDD [Enterprise] 3.5" SAS); PCIe x8 RAID controller incl. ZMCP module (1 slot occupied)[2]			L						
SSD									
• 480 GB SSD 2.5" SATA			P						
• 960 GB SSD 2.5" SATA			Q						
• 1920 GB SSD 2.5" SATA			R						
• RAID1, 2 x 480 GB SSD 2.5" SATA			S						
• RAID1, 2 x 960 GB SSD 2.5" SATA			T						
• RAID1, 2 x 1920 GB SSD 2.5" SATA			U						
• RAID5, approx. 3.8 TB (3 x 1920 GB SSD 2.5" SATA)			V						
• RAID5, approx. 5.7 TB (4 x 1920 GB SSD 2.5" SATA)[4]			W						
Without drives [3]			X						
Drive cage / M.2 memory									
• Drive cage for internal installation, 0.5 g vibration, 5 g shock[2][3][4]				0					
• Drive cage for internal installation, 0.5 g vibration, 5 g shock, 512 GB SSD M.2 NVMe on PCIe x4 adapter card (1 slot occupied) (for operating system)[2][4]				1					
• Drive cage for internal installation, 0.5 g vibration, 5 g shock, 1024 GB SSD M.2 NVMe on PCIe x4 adapter card (1 slot occupied) (for operating system)[2][4]				2					
• Drive cage for removable trays, on the front[3]				4					
• Drive cage for removable trays, on the front, 512 GB SSD M.2 NVMe on PCIe x4 adapter card (1 slot occupied) (for operating system)				5					
• Drive cage for removable trays, on the front, 1024 GB SSD M.2 NVMe on PCIe x4 adapter card (1 slot occupied) (for operating system)				6					
Main memory									
• 8 GB DDR4 SDRAM (2 × 4 GB), dual channel					0				
• 16 GB DDR4 SDRAM (2 × 8 GB), dual channel					1				
• 32 GB DDR4 SDRAM (2 × 16 GB), dual channel					2				
• 64 GB DDR4 SDRAM (4 × 16 GB), dual channel					3				
• 128 GB DDR4 SDRAM (4 × 32 GB), dual channel					4				
• 16 GB DDR4 SDRAM (2 × 8 GB), ECC, dual channel, (only with Xeon processor)[1]					5				
• 32 GB DDR4 SDRAM (2 × 16 GB), ECC, dual channel, (only with Xeon processor)[1]					6				
• 64 GB DDR4 SDRAM (4 × 16 GB), ECC, dual channel, (only with Xeon processor)[1]					7				
Software installation									
• PCS 7 V9.1 preinstalled						1			
Operating system / Restore data storage medium / TPM									
• Windows Server 2019 Standard Edition incl. 16-core, 5 clients, 64-bit, MUI (en, de, fr, it, sp, ch), without Restore USB flash drive							P		
• Windows Server 2019 Standard Edition incl. 16-core, 5 clients, 64-bit, MUI (en, de, fr, it, sp, ch), without Restore USB flash drive, TPM 2.0 (not for China)							Q		

© Siemens AG 2024

Selection and ordering data (continued)

	Article No.									
• Windows Server 2019 Standard Edition incl. 16-core, 5 clients, 64-bit, MUI (en, de, fr, it, sp, ch), with Restore USB flash drive								R		
• Windows Server 2019 Standard Edition incl. 16-core, 5 clients, 64-bit, MUI (en, de, fr, it, sp, ch), with Restore USB flash drive, TPM 2.0 (not for China)								S		
Bus module / Communication / Multi-monitor										
• Bus module 11-slot: 3 x PCI, 1 x PCIe x16 (8 L), 5 x PCIe x16 (4 L), 2 x PCIe x4 (4 L)									A	
• Bus module 11-slot: 3 x PCI, 1 x PCIe x16 (8 L), 5 x PCIe x16 (4 L), 2 x PCIe x4 (4 L), multi-monitor 4-5 screens, combined, onboard interfaces (2 x DP) + PCIe x16 graphics card (3 x mDP: 3 x adapter mDP to DP), 2 GB (1 slot occupied)									B	
• Bus module 11-slot: 3 x PCI, 1 x PCIe x16 (8 L), 5 x PCIe x16 (4 L), 2 x PCIe x4 (4 L), BCE									C	
• Bus module 11-slot: 3 x PCI, 1 x PCIe x16 (8 L), 5 x PCIe x16 (4 L), 2 x PCIe x4 (4 L), BCE, multi-monitor 4-5 screens, combined, onboard interfaces (2 x DP) + PCIe x16 graphics card (3 x mDP: 3 x adapter mDP to DP), 2 GB (1 slot occupied)									D	
• Bus module 11-slot: 3 x PCI, 1 x PCIe x16 (8 L), 5 x PCIe x16 (4 L), 2 x PCIe x4 (4 L), Industrial Ethernet (CP1623), (1 slot occupied)									E	
• Bus module 11-slot: 3 x PCI, 1 x PCIe x16 (8 L), 5 x PCIe x16 (4 L), 2 x PCIe x4 (4 L), Industrial Ethernet (CP1623), (1 slot occupied), multi-monitor 4-5 screens, combined, onboard interfaces (2 x DP) + PCIe x16 graphics card (3 x mDP: 3 x adapter mDP to DP), 2 GB (1 slot occupied)									F	
Power supply / power supply cord										
• 100/240 V AC industrial power supply unit										
- Without power supply cord										0
- Power supply cord for Europe										1
- Power supply cord for USA										2
- Power supply cord for China										3
• 2 x 100/240 V AC redundant industrial power supply unit										
- Without power supply cord										4
- Power supply cord for Europe										5
- Power supply cord for USA										6
- Power supply cord for China										7

1) Selection criterion "Processor / System type", Position B, F, cannot be combined with selection criterion "Main memory", Position 5, 6, 7
2) Selection criterion "Drives", Position G, H, J, K, L, cannot be combined with selection criterion "Drive cage / M.2 memory", Position 0, 1, 2
3) Selection criterion "Drives", Position X, cannot be combined with selection criterion "Drive cage / M.2 memory", Position 0, 4
4) Selection criterion "Drives", Position W, cannot be combined with selection criterion "Drive cage / M.2 memory", Position 0, 1, 2

SIMATIC Process Control System IPC847E as spare part

	Article No.									
SIMATIC Process Control System - IPC847E spare part (RACK PC, 19", 4 U) Interfaces: 3 x Gbps Ethernet (IE/PN, RJ45) 1 x DVI-D; 2 x DisplayPort; 1 x COM (RS 232, 9-pin); audio; 4 x USB3.1 Gen2 (Type A), 2 x USB3.1 Gen2 (Type C) on the rear side; 2 x USB3.1 Gen 1 (Type A) on the front; 1 x USB3.1 Gen2 (Type A) internal Temperature and fan monitoring, watchdog, card retainer	**6ES7661-** 1	•	•	•	•	-	•	•	•	•
Processor and system type										
Core i5-8500 (6C/6T, 3.0 (4.1) GHz, 9 MB cache, TB, AMT)										
• Core i5-8500 (6C/6T, 3.0 (4.1) GHz, 9 MB cache, TB, AMT) - spare part[1]		V								
Core i7-8700 (6C/12T, 3.2 (4.6) GHz, 12 MB cache, TB, AMT)										
• Core i7-8700 (6C/12T, 3.2 (4.6) GHz, 12 MB cache, TB, AMT) - spare part[1]		W								
Xeon E-2176G (6C/12T, 3.7 (4.7) GHz, 12 MB cache, TB, AMT)										
• Xeon E-2176G (6C/12T, 3.7 (4.7) GHz, 12 MB cache, TB, AMT) - spare part		X								
Xeon E-2278GE (8C/16T, 3.3 (4.7) GHz, 16 MB cache, TB, AMT)										
• Xeon E-2278GE (8C/16T, 3.3 (4.7) GHz, 16 MB cache, TB, AMT) - spare part		Y								
Drives:										
(HDD)										
• 1 TB HDD [Enterprise] 3.5" SATA			A							
• 2 TB HDD [Enterprise] 3.5" SATA			B							
• RAID1, 2 x 1 TB HDD [Enterprise] 3.5" SATA			C							
• RAID1, 2 x 2 TB HDD [Enterprise] 3.5" SATA			D							

© Siemens AG 2024

Selection and ordering data (continued)

	Article No.									
• RAID1, 2 x 2 TB HDD [Enterprise] 3.5" SATA + 2 TB HDD [Enterprise] 3.5" SATA as Hot Spare			E							
• RAID1, 2 x 2 TB HDD [Enterprise] 3.5" SATA + 480 GB 2.5" SSD SATA (for operating system if M.2 SSD not ordered)			F							
HW RAID, SAS										
• RAID1, 2 x 2 TB HDD [Enterprise] 3.5" SAS; PCIe x8 RAID controller incl. ZMCP module (1 slot occupied)[2]			G							
• RAID1, 2 x 2 TB HDD [Enterprise] 3.5" SAS; PCIe x8 RAID controller incl. ZMCP module (1 slot occupied) + 480 GB SSD 2.5" SATA[2]			H							
• RAID5, 4 TB (3 x 2 TB HDD [Enterprise] 3.5" SAS); PCIe x8 RAID controller incl. ZMCP module (1 slot occupied)[2]			J							
• RAID5, 4 TB (3 x 2 TB HDD [Enterprise] 3.5" SAS) + 2 TB HDD [Enterprise] 3.5" SAS as HotSpare, PCIe x8 RAID controller incl. ZMCP module (1 slot occupied)[2]			K							
• RAID5, 6 TB (4 x 2 TB HDD [Enterprise] 3.5" SAS); PCIe x8 RAID controller incl. ZMCP module (1 slot occupied)[2]			L							
SSD										
• 480 GB SSD 2.5" SATA			P							
• 960 GB SSD 2.5" SATA			Q							
• 1920 GB SSD 2.5" SATA			R							
• RAID1, 2 x 480 GB SSD 2.5" SATA			S							
• RAID1, 2 x 960 GB SSD 2.5" SATA			T							
• RAID1, 2 x 1920 GB SSD 2.5" SATA			U							
• RAID5, approx. 3.8 TB (3 x 1920 GB SSD 2.5" SATA)			V							
• RAID5, approx. 5.7 TB (4 x 1920 GB SSD 2.5" SATA)[4]			W							
Without drives [3]			X							
Drive cage / M.2 memory										
• Drive cage for internal installation, 0.5 g vibration, 5 g shock[2][3][4]				0						
• Drive cage for internal installation, 0.5 g vibration, 5 g shock, 512 GB SSD M.2 NVMe on PCIe x4 adapter card (1 slot occupied) (for operating system)[2][4]				1						
• Drive cage for internal installation, 0.5 g vibration, 5 g shock, 1024 GB SSD M.2 NVMe on PCIe x4 adapter card (1 slot occupied) (for operating system)[2][4]				2						
• Drive cage for removable trays, on the front[3]				4						
• Drive cage for removable trays, on the front, 512 GB SSD M.2 NVMe (M.2 slot occupied) on PCIe x4 adapter card (1 slot occupied) (for operating system)				5						
• Drive cage for removable trays, on the front, 1024 GB SSD M.2 NVMe on PCIe x4 adapter card (1 slot occupied) (for operating system)				6						
Main memory										
• 8 GB DDR4 SDRAM (2 × 4 GB), dual channel					0					
• 16 GB DDR4 SDRAM (2 × 8 GB), dual channel					1					
• 32 GB DDR4 SDRAM (2 × 16 GB), dual channel					2					
• 64 GB DDR4 SDRAM (4 × 16 GB), dual channel					3					
• 128 GB DDR4 SDRAM (4 × 32 GB), dual channel					4					
• 16 GB DDR4 SDRAM (2 × 8 GB), ECC, dual channel, (only with Xeon processor)[1]					5					
• 32 GB DDR4 SDRAM (2 × 16 GB), ECC, dual channel, (only with Xeon processor)[1]					6					
• 64 GB DDR4 SDRAM (4 × 16 GB), ECC, dual channel, (only with Xeon processor)[1]					7					
Software installation										
• Without preinstallation							8			
Operating system / Restore data storage medium / TPM										
• Windows 10 Enterprise 2019 LTSC, MUI (en, de fr, it, sp, ch), 64-bit, without Restore USB flash drive[2]								A		
• Windows 10 Enterprise 2019 LTSC, MUI (en, de fr, it, sp, ch), 64-bit, without Restore USB flash drive, TPM 2.0 (not for China)[2]								B		
• Windows 10 Enterprise 2019 LTSC, MUI (en, de fr, it, sp, ch), 64-bit, with Restore USB flash drive[2]								C		
• Windows 10 Enterprise 2019 LTSC, MUI (en, de fr, it, sp, ch), 64-bit, with Restore USB flash drive, TPM 2.0 (not for China)[2]								D		
• Windows Server 2019 Standard Edition incl. 16-core, 5 clients, 64-bit, MUI (en, de, fr, it, sp, ch), without Restore USB flash drive								P		
• Windows Server 2019 Standard Edition incl. 16-core, 5 clients, 64-bit, MUI (en, de, fr, it, sp, ch), without Restore USB flash drive, TPM 2.0 (not for China)								Q		
• Windows Server 2019 Standard Edition incl. 16-core, 5 clients, 64-bit, MUI (en, de, fr, it, sp, ch), with Restore USB flash drive								R		
• Windows Server 2019 Standard Edition incl. 16-core, 5 clients, 64-bit, MUI (en, de, fr, it, sp, ch), with Restore USB flash drive, TPM 2.0 (not for China)								S		

© Siemens AG 2024

Selection and ordering data (continued)

	Article No.									
• Without operating system, without Restore USB flash drive								X		
Bus module / Communication / Multi-monitor										
• Bus module 11-slot: 3 x PCI, 1 x PCIe x16 (8 L), 5 x PCIe x16 (4 L), 2 x PCIe x4 (4 L)									A	
• Bus module 11-slot: 3 x PCI, 1 x PCIe x16 (8 L), 5 x PCIe x16 (4 L), 2 x PCIe x4 (4 L), multi-monitor 4-5 screens, combined, onboard interfaces (2 x DP) + PCIe x16 graphics card (3 x mDP: 3 x adapter mDP to DP), 2 GB (1 slot occupied)									B	
• Bus module 11-slot: 3 x PCI, 1 x PCIe x16 (8 L), 5 x PCIe x16 (4 L), 2 x PCIe x4 (4 L), BCE									C	
• Bus module 11-slot: 3 x PCI, 1 x PCIe x16 (8 L), 5 x PCIe x16 (4 L), 2 x PCIe x4 (4 L), BCE, multi-monitor 4-5 screens, combined, onboard interfaces (2 x DP) + PCIe x16 graphics card (3 x mDP: 3 x adapter mDP to DP), 2 GB (1 slot occupied)									D	
• Bus module 11-slot: 3 x PCI, 1 x PCIe x16 (8 L), 5 x PCIe x16 (4 L), 2 x PCIe x4 (4 L), Industrial Ethernet (CP1623), (1 slot occupied)									E	
• Bus module 11-slot: 3 x PCI, 1 x PCIe x16 (8 L), 5 x PCIe x16 (4 L), 2 x PCIe x4 (4 L), Industrial Ethernet (CP1623), (1 slot occupied), multi-monitor 4-5 screens, combined, onboard interfaces (2 x DP) + PCIe x16 graphics card (3 x mDP: 3 x adapter mDP to DP), 2 GB (1 slot occupied)									F	
Power supply / power supply cord										
• 100/240 V AC industrial power supply unit										
- Without power supply cord										0
- Power supply cord for Europe										1
- Power supply cord for USA										2
- Power supply cord for China										3
• 2 x 100/240 V AC redundant industrial power supply unit										
- Without power supply cord										4
- Power supply cord for Europe										5
- Power supply cord for USA										6
- Power supply cord for China										7

1) Selection criterion "Processor / System type", Position V, W, cannot be combined with selection criterion "Main memory", Position 5, 6, 7
2) Selection criterion "Drives", Position G, H, J, K, L, cannot be combined with selection criterion "Drive cage / M.2 memory", Position 0, 1, 2, or with selection criterion "Operating system / Restore data storage medium / TPM", position A, B, C, D
3) Selection criterion "Drives", Position X, cannot be combined with selection criterion "Drive cage / M.2 memory", Position 0, 4
4) Selection criterion "Drives", Position W, cannot be combined with selection criterion "Drive cage / M.2 memory", Position 0, 1, 2

Add-on/expansion components

Add-on/expansion components	
USB keyboard TKL-105 Color: black	
• Keyboard layout, German	6AV6881-0AU14-0AA0
• Keyboard layout, US International	6AV6881-0AU14-1AA0
SIMATIC HMI USB mouse Optical mouse with scroll wheel and USB connection, color anthracite	6AV2181-8AT00-0AX0
Memory expansion	
• 4 GB DDR4 SDRAM (1 × 4 GB)	6ES7648-2AL60-0QA0
• 8 GB DDR4 SDRAM (1 × 8 GB)	6ES7648-2AL70-0QA0
• 16 GB DDR4 SDRAM (1 × 16 GB)	6ES7648-2AL80-0QA0
• 32 GB DDR4 SDRAM (1 × 32 GB)	6ES7648-2AL81-0QA0
Retainer For locking the internal USB interface	6ES7648-1AA00-0XK0
Tray for low-profile removable drive bay For 3.5" hard disk (SATA/SAS) or 2.5" SSD (SATA), without drive	6ES7648-0EH00-1BA0
Adapter cable	
• DisplayPort to DVI-D for onboard graphics	6ES7648-3AF00-0XA0
• DisplayPort to VGA for onboard graphics	6ES7648-3AG00-0XA0

Add-on/expansion components	
• Mini DisplayPort to VGA for graphics card	6ES7648-3AL00-0XA0
• Mini DisplayPort to DVI-D for graphics card	6ES7648-3AK00-0XA0
• Mini DisplayPort to DVI-D for graphics card (3 units per pack)	6ES7648-3AK00-1XA0
• Mini DisplayPort to DisplayPort for graphics card	6ES7648-3AJ00-0XA0
• Mini DisplayPort to DisplayPort for graphics card (3 units per pack)	6ES7648-3AJ00-1XA0
Power supply cord, 3 m, for Rack PCs	
• Europe (for Austria, Belgium, Finland, France, Germany, the Netherlands, Spain, Sweden)	6ES7900-0AA00-0XA0
• For the UK	6ES7900-0BA00-0XA0
• For Switzerland	6ES7900-0CA00-0XA0
• For the USA	6ES7900-0DA00-0XA0
• For Italy	6ES7900-0EA00-0XA0
• For China	6ES7900-0FA00-0XA0
SIMATIC NET HARDNET IE S7 REDCONNECT PowerPack For communication with high-availability AS, see the "Industrial communication" section under "Industrial Ethernet – System connection PCS 7 systems".	

© Siemens AG 2024

Accessories

Power supply cord for Rack PC

The SIMATIC PCS 7 preferred types are always delivered with a "European power supply cord". This can be used in Germany, France, Spain, Netherlands, Belgium, Sweden, Austria and Finland.

The country-specific versions listed in the Ordering data are required for other countries. The following picture shows the design of a number of power supply plugs:

Country-specific power supply cords for Rack PC

Tower kit for IPC847E

The tower kit enables conversion of a SIMATIC Process Control System IPC with Rack PC design to an industrial tower PC. A tower kit can be ordered as an accessory for the SIMATIC Process Control System IPC of the type IPC847E.

Tower kit for IPC847E

© Siemens AG 2024

Overview

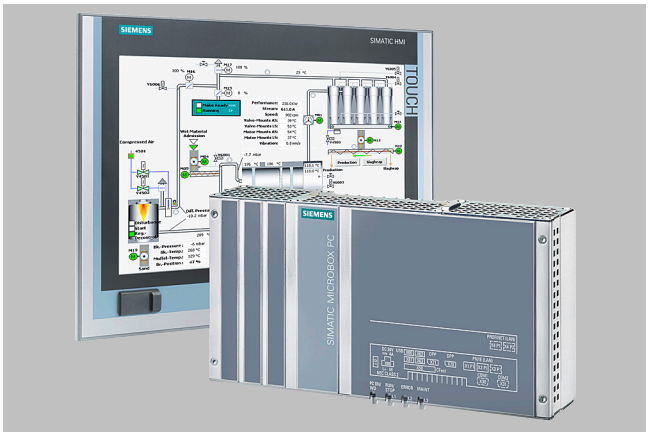

SIMATIC IPC427E and SIMATIC IPC477E family

Clients based on the rugged SIMATIC Microbox PC can be used within the SIMATIC PCS 7 process control system in the operator system and in SIMATIC BATCH. With their compact design, they are a space-saving alternative to clients based on a SIMATIC BOX PC or SIMATIC Rack PC for these applications. However, the numbers of expansion options and interfaces are comparatively lower.

Two designs are available:

- SIMATIC Process Control System Client IPC427E

  Computing unit (without monitor) in compact metal enclosure, suitable for DIN rail and wall mounting, optional installation with portrait mounting kit

- SIMATIC Process Control System Client IPC477E

  Built-in unit, consisting of 22" TFT single Touch Panel with integrated computing unit, suitable for installation in mounting cutouts such as in consoles or cabinets

Both designs are available with hard disk as well as solid state drive. Due to their exceptional physical properties, both versions are suitable for continuous maintenance-free 24/7 operation without the support of a fan.

For the SIMATIC Process Control System Client IPC427E, visualization of a project/subproject can be distributed to two process monitors connected to the onboard interfaces in multi-monitor mode. For the SIMATIC Process Control System Client IPC477E, process control is primarily via the integrated 22" display.

© Siemens AG 2024

Technical specifications

Comparison of SIMATIC Process Control System Clients IPC427E and IPC477E

SIMATIC Process Control System Clients based on Microbox Types	SIMATIC Process Control System Client IPC427E	SIMATIC Process Control System Client IPC477E
Setup and equipment features		
Design	• Compact Microbox PC without Panel • DIN rail or wall mounting; horizontal (preferred) or vertical • Portrait mounting; vertical	• Compact Panel PC, consisting of 22" TFT Single Touch Panel with integrated computing unit • Built-in unit for installation in mounting cutouts, for example in consoles or cabinets; in landscape format (vertical or max. ± 45° vertical incline) • Fastening with mounting clips or mounting brackets
Degree of protection in accordance with IEC 60529	IP20	IP65 on the front; IP20 on the rear side (enclosure)
CPU	Intel Core i5-6442EQ, 4C/4T, 1.9 (2.7) GHz, 6 MB cache, iAMT	Intel Core i5-6442EQ, 4C/4T, 1.9 (2.7) GHz, 6 MB cache, iAMT
Main memory	8 GB DDR4 SO-DIMM Max. 16 GB	8 GB DDR4 SO-DIMM Max. 16 GB
Graphic controller	Intel HD graphics controller	Intel HD graphics controller
Memory media, alternative		
• Hard disk	2.5" SATA-HDD 320 GB	2.5" SATA-HDD 320 GB
• Solid State Drive	2.5" SATA-SSD 240 GB	2.5" SATA-SSD 240 GB
Memory media, additive		
• CD-ROM/DVD-RW/diskette	Connectable via USB (not included in scope of delivery)	Connectable via USB (not included in scope of delivery)
Interfaces		
• Ethernet	3 Ethernet ports (RJ45); 10/100/1000 Mbps, isolated, with teaming capability	3 Ethernet ports (RJ45); 10/100/1000 Mbps, isolated, with teaming capability
• USB	4 high-speed USB 3.0 ports	4 high-speed USB 3.0 ports
• Graphics connection	2 × DisplayPort	2 × DisplayPort
• Keyboard, mouse	Connectable via USB (keyboard and mouse not included in scope of delivery)	Connectable via USB (keyboard and mouse not included in scope of delivery)
Monitoring functions		
• Temperature monitoring	Yes	–
• Watchdog	Yes	Yes
• Status LEDs	Yes	–
• Fan	No	–
Monitoring function via the network	Optional	–
Operating system, basic software		
Operating system	Windows 10 Enterprise 2019 LTSC, 64-bit	Windows 10 Enterprise 2019 LTSC, 64-bit
System-tested SIMATIC industrial software	SIMATIC IPC DiagMonitor integrated in pre-installation	SIMATIC IPC DiagMonitor integrated in pre-installation
Electromagnetic compatibility (EMC)		
Interference emission over mains/AC power supply	EN 61000-6-3, EN 61000-6-4, CISPR 22 class B, FCC class A	EN 61000-6-3, EN 61000-6-4, CISPR 22 class B, FCC class A
Immunity to conducted interference on the supply lines	±2 kV (according to IEC 61000-4-4; burst) ±1 kV (according to IEC 61000-4-5; symmetrical surge) ±2 kV (according to IEC 61000-4-5; asymmetrical surge)	±2 kV (according to IEC 61000-4-4; burst) ±1 kV (according to IEC 61000-4-5; symmetrical surge) ±2 kV (according to IEC 61000-4-5; asymmetrical surge)
Noise immunity on signal lines	±1 kV (according to IEC 61000-4-4; burst; length < 3 m) ±2 kV (according to IEC 61000-4-4; burst; length > 3 m) ±2 kV (according to IEC 61000-4-5; surge; length > 30 m)	±1 kV (according to IEC 61000-4-4; burst; length < 3 m) ±2 kV (according to IEC 61000-4-4; burst; length > 3 m) ±2 kV (according to IEC 61000-4-5; surge; length > 30 m)
Immunity to static discharge in accordance with IEC 61000-4-2	±6 kV contact discharge ±8 kV air discharge	±6 kV contact discharge ±8 kV air discharge
Immunity to RF radiation	10 V/m for 80 to 1 000 MHz and 1.4 to 2 GHz, 80% AM in accordance with IEC 61000-4-3 3 V/m for 2 to 2.7 GHz, 80% AM in accordance with IEC 61000-4-3 10 V for 10 kHz to 80 MHz, 80% AM in accordance with IEC 61000-4-6	10 V/m for 80 to 1 000 MHz and 1.4 to 2 GHz, 80% AM in accordance with IEC 61000-4-3 3 V/m for 2 to 2.7 GHz, 80% AM in accordance with IEC 61000-4-3 10 V for 10 kHz to 80 MHz, 80% AM in accordance with IEC 61000-4-6
Immunity to magnetic fields at 50 Hz	100 A/m in accordance with IEC 61000-4-8	100 A/m in accordance with IEC 61000-4-8

© Siemens AG 2024

Technical specifications (continued)

SIMATIC Process Control System Clients based on Microbox Types	SIMATIC Process Control System Client IPC427E	SIMATIC Process Control System Client IPC477E
Climatic conditions		
Ambient temperature in operation	0 to +50 °C	0 to +45 °C
Relative humidity	Tested according to IEC 60068-2-78, IEC 60068-2-30	Tested according to IEC 60068-2-78, IEC 60068-2-30
• Operation	5 ... 80% at 25 °C (no condensation)	5 ... 80% at 25 °C (no condensation)
• Storage	5 ... 95% at 25 °C (no condensation)	
Mechanical ambient conditions		
Vibration load	Tested according to IEC 60068-2-6	Tested according to IEC 60068-2-6
• Operation	10 ... 58 Hz: 0.075 mm 58 ... 200 Hz: 9.8 m/s² (1 g)	5 ... 9 Hz: 3.5 mm; 9 ... 500 Hz: 9.8 m/s² (with SSD); 10 ... 58 Hz 0.0375 mm; 58 ... 200 Hz: 4.9 m/s² (hard disk)
Shock load	Tested according to IEC 60068-2-29	Tested according to IEC 60068-2-27
• Operation	50 m/s² (5 g), 30 ms, 100 shocks	50 m/s², 30 ms (with hard disk) 150 m/s², 11 ms (without hard disk)
Standards, approvals and certificates		
CE mark	Yes	Yes
CSA approval		Yes
UL approval	Yes	Yes
• UL 508	Yes	Yes
cULus	Yes	Yes
RCM (formerly C-TICK)	Yes	Yes
KC approval	Yes	Yes
FCC	Yes	Yes
EMC	CE, EN 55022A, EN 61000-6-4, EN 61000-6-2	CE, EN 61000-6-4; CISPR 22:2004 class A; FCC class A
• EN 61000-6-2	Yes	
Dimensions		
Width × height × depth (in mm)	262 × 139.7 × 55.5	• 542 × 362 × 83 (installation dimensions, central configuration, no optical drive) • 542 × 362 × 76 (mounting cutout/device depth)
Operating unit (width × height in mm)	--	560 × 380

© Siemens AG 2024

Overview

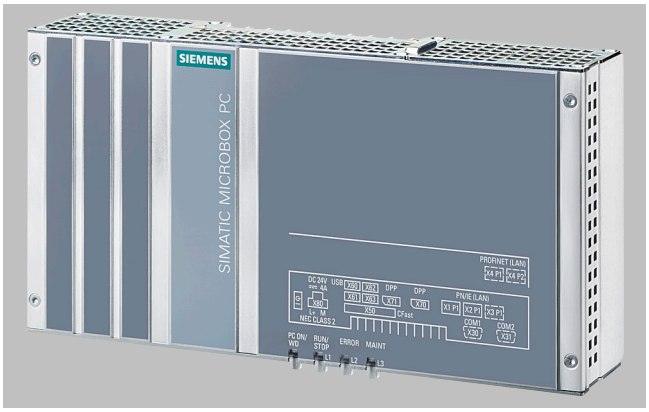

SIMATIC PCS 7 OS Client IPC427E

The SIMATIC Process Control System Client IPC427E is offered in two versions:

- SIMATIC Process Control System Client IPC427E (HDD)
  With hard disk 2.5" SATA-HDD, 320 GB
- SIMATIC Process Control System Client IPC427E (SSD)
  With solid state drive 2.5" SATA-SSD, 240 GB

Design

Both versions of the SIMATIC Process Control System Client IPC427E are suitable for continuous maintenance-free 24/7 operation without the support of a fan.

The absence of rotating storage media means that the SSD version is particularly resistant to vibration and shock. When operating in a restricted access location (RAL), e.g. in a lockable control cabinet, operating temperatures from 0 °C to +50 °C are permissible for this version in a horizontal mounting position.

The compact design of the SIMATIC Process Control System Client IPC427E (HDD/SSD) and the flexible mounting options (DIN rail, wall or portrait mounting) either horizontally or vertically facilitate space-saving installation.

Expansions/interfaces

The SIMATIC Process Control System Client IPC427E (HDD/SSD) features:

- 4 high-speed USB 3.0 ports
- 2 DisplayPorts (DVI with DPP-to-DVI adapter); can be used for multi-monitor mode with two screens
- 3 Gigabit Ethernet ports (IE/PN)

The integrated Ethernet ports are suitable for connection to a redundant terminal bus over IE-RNA (for details on implementation, refer to the function manual "High-availability process control systems", "Redundant, high availability terminal bus").

The SIMATIC Process Control System Client IPC427E (HDD/SSD) is supplied without input/output devices. In addition to mouse and keyboard, two other input/output devices can be externally connected via the provided USB ports, e.g. an optical drive (DVD-ROM/DVD±RW) or smart card reader.

Monitoring functions

Configurable monitoring functions can be recorded and evaluated via SIMATIC IPC DiagMonitor and SIMATIC PCS 7 Maintenance Station. These monitoring functions include:

- Program execution (watchdog)
- Processor and board temperatures
- Enhanced diagnostics/messages, e.g. operating hours counter, hard disk status or system status, back-up battery status

The "Power" and "Watchdog" signals are displayed on LEDs.

Pre-installed software

The following software is pre-installed on the SIMATIC Process Control System Client IPC427E (HDD/SSD) on delivery:

- Operating system Windows 10 Enterprise 2019 LTSC, 64-bit
- SIMATIC PCS 7 OS Software Client
- SIMATIC IPC DiagMonitor diagnostics software

© Siemens AG 2024

Selection and ordering data

SIMATIC Process Control System Client 427E based on SIMATIC IPC427E SIMATIC IPC427E for use as SIMATIC PCS 7 OS Client/Batch Client Intel Core i5-6442EQ (up to 2.7 GHz, 6 MB cache); 8 GB work memory; 3 × Gigabit Ethernet (IE/PN); 4 × high-speed USB 3.0; 24 V DC power supply SIMATIC IPC DiagMonitor diagnostics software and Restore USB sets; SIMATIC PCS 7 OS Software Client V9.1 pre-installed Note: Product package without optical drive, mouse, keyboard or monitor ***Operating system Windows 10 Enterprise 2019 LTSC, 64-bit***	
• **SIMATIC Process Control System Client IPC427E (HDD)** Version with hard disk 320 GB, HDD SATA	6ES7650-0VG68-0YX0
• **SIMATIC Process Control System Client IPC427E (SSD)** Version with 240 GB solid state drive, SSD SATA	6ES7650-0VG68-0YX1

Additional and expansion components

SIMATIC IPC, graphics adapter cable, DVI-I to VGA Length 250 mm	6ES7648-3AB00-0XA0
SIMATIC IPC, graphics adapter DPP to DVI Converts DisplayPort to DVI-D	6ES7648-3AF00-0XA0
Keyboard/mouse	
USB keyboard TKL-105 Color: black	
• Keyboard layout, German	6AV6881-0AU14-0AA0
• Keyboard layout, US International	6AV6881-0AU14-1AA0
SIMATIC HMI USB mouse Optical mouse with scroll wheel and USB connection, color anthracite	6AV2181-8AT00-0AX0

Accessories

Portrait mounting	
Portrait mounting kit For space-saving installation of the SIMATIC PCS 7 OS Client 427E (on the front)	6ES7648-1AA20-0YP0

Accessories

Portrait mounting kit

The portrait assembly kit allows space-saving installation of the SIMATIC Microbox PC in the control cabinet. The technical specifications of the SIMATIC Microbox PC correspond in this design form to those with a vertical DIN rail assembly.

Portrait mounting reduces the mounting area required (W × H in mm) from 262 × 133 to 61.5 × 315. Together with the kit, the SIMATIC Microbox PC occupies an installation depth of 149.7 mm in the control cabinet. Since all interfaces of the SIMATIC Microbox PC are accessible from the front, this type of assembly is very convenient for commissioning.

When using the portrait assembly kit for the SIMATIC Microbox PC, please also note the information on operation planning and device installation in the "SIMATIC IPC427E industrial PC" manual.

Technical specifications

For detailed technical specifications of the SIMATIC Process Control System Client IPC427E, see "Comparison of SIMATIC Process Control System Clients IPC427E and IPC477E" in the catalog section "SIMATIC Microbox PC".

© Siemens AG 2024

Overview

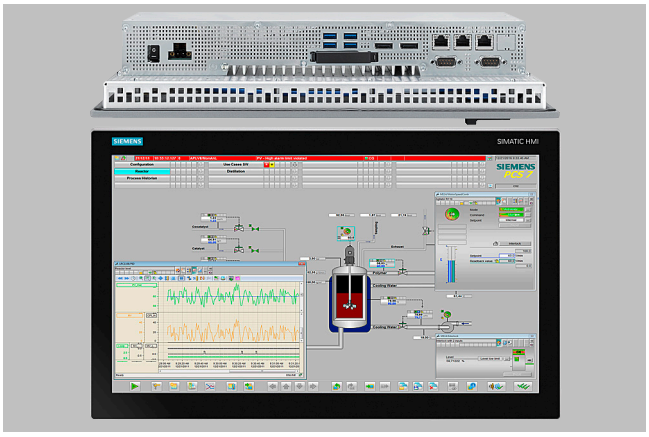

SIMATIC Process Control System Client IPC477E, from above and from front

The SIMATIC Process Control System Client IPC477E consists of a 22" TFT Single Touch Panel with an integrated computing unit. It is available in two versions.

- SIMATIC Process Control System Client IPC477E (HDD)
  With hard disk, 2.5" SATA HDD, 320 GB
- SIMATIC Process Control System Client IPC477E (SSD)
  With solid-state drive, 2.5" SATA SSD, 240 GB

Design

The design of the SIMATIC Process Control System Client IPC477E has been optimized for installation in the mounting cutouts of cabinets, enclosures and consoles.

Both versions of the SIMATIC Process Control System Client IPC477E are suitable for continuous maintenance-free 24/7 operation without the support of a fan.

The more rugged SIMATIC Process Control System Client IPC477E with SSD can bear greater mechanical loads. With vertical installation in landscape format, it is approved for operating temperatures of 0 to +45 °C.

Using a touch pen as an input tool protects the touch screen and makes it easy to achieve pin-point accuracy when operating small text boxes or buttons – especially when working with gloves.

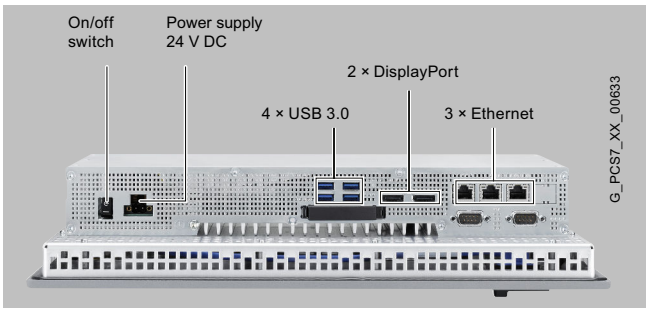

IPC477E, 22", for SIMATIC PCS 7, with connections

Expansions/interfaces

The SIMATIC Process Control System Client IPC477E (HDD/SSD) features:

- 4 high-speed USB 3.0 ports, on the rear side
- 1 USB port, on the front
- 2 DisplayPort interfaces
- 3 Gigabit Ethernet ports (IE/PN)

The integrated Ethernet ports are suitable for connection to a redundant terminal bus (for details on implementation, refer to the function manual "High-availability process control systems", "Redundant, high availability terminal bus").

The SIMATIC Process Control System Client IPC477E (HDD/SSD) is supplied without input/output devices. In addition to mouse and keyboard, two other input/output devices can be externally connected via the provided USB ports, e.g. an optical drive (DVD-ROM/DVD±RW) or smart card reader.

Monitoring functions

Configurable monitoring functions can be recorded and evaluated via SIMATIC IPC DiagMonitor and SIMATIC PCS 7 Maintenance Station. These monitoring functions include:

- Program execution (watchdog)
- Processor and board temperatures
- Enhanced diagnostics/messages, e.g. operating hours counter, hard disk status or system status, back-up battery status

Pre-installed software

The following software is pre-installed on the SIMATIC Process Control System Client IPC477E (HDD/SSD) on delivery:

- Operating system Windows 10 Enterprise 2019 LTSC, 64-bit
- SIMATIC PCS 7 OS Software Client
- SIMATIC IPC DiagMonitor diagnostics software

© Siemens AG 2024

Selection and ordering data

SIMATIC Process Control System Client IPC477E based on SIMATIC IPC477E SIMATIC IPC477E for use as SIMATIC PCS 7 OS Client/BATCH Client 22" Single Touch Panel; 1920 × 1080 pixels; Intel Core i5-6442EQ (up to 2.7 GHz, 6 MB cache); 8 GB work memory; 3 × GB Ethernet (IE/PN); 4 × high-speed USB 3.0; 1 × USB 2.0; 24 V DC power supply SIMATIC IPC DiagMonitor diagnostics software and Restore USB flash drive; SIMATIC PCS 7 OS Software Client V9.1 pre-installed Note: Product package without optical drive, mouse or keyboard ***Operating system Windows 10 Enterprise 2019 LTSC, 64-bit***	
• **SIMATIC Process Control System Client IPC477E (HDD)** Version with hard disk 320 GB, HDD SATA	**6ES7650-0VG68-1YX0**
• **SIMATIC Process Control System Client IPC477E (SSD)** Version with 240 GB solid state drive, SSD SATA	**6ES7650-0VG68-1YX1**

Additional and expansion components

USB keyboard TKL-105 Color: black	
• Keyboard layout, German	**6AV6881-0AU14-0AA0**
• Keyboard layout, US International	**6AV6881-0AU14-1AA0**
SIMATIC HMI USB mouse Optical mouse with scroll wheel and USB connection, color anthracite	**6AV2181-8AT00-0AX0**
Touch pen, thick, resistive technology For resistive touch screen, optimized for operation with gloves, including screw-on wall-mounting bracket	**6AV7672-1JB00-0AA0**

Technical specifications

For detailed technical specifications of the SIMATIC Process Control System Client IPC477E, see "Comparison of SIMATIC Process Control System Clients IPC427E and IPC477E" in the catalog section "SIMATIC Microbox PC".

© Siemens AG 2024

Design

Mouse

SIMATIC Process Control System IPCs, SIMATIC PCS 7 compact systems as well as OS Clients based on SIMATIC Box/Microbox PC are delivered without a mouse. The SIMATIC HMI USB mouse is recommended as the input device for the operator-controlled stations of a SIMATIC PCS 7 system.

Keyboard

SIMATIC Process Control System IPCs, SIMATIC PCS 7 compact systems as well as OS Clients based on SIMATIC BOX and Microbox PC are delivered without a keyboard.

An example of a keyboard without additional special functions that is suitable for process mode with SIMATIC PCS 7 is the USB keyboard TKL-105.

The USB keyboard TKL-105 is a very rugged keyboard that is suitable even for harsh environments. Thanks to its IP68 degree of protection, the keyboard can even be washed (dishwasher-proof). The new black color fits optimally into all environments. The housing is made of ABS with anti-microbial coating. The long-travel keys ensure excellent tactile feel and fatigue-free typing.

Selection and ordering data

SIMATIC HMI USB mouse Optical mouse with scroll wheel and USB connection, color anthracite	**6AV2181-8AT00-0AX0**
USB keyboard TKL-105 Color: black	
• Keyboard layout, German	**6AV6881-0AU14-0AA0**
• Keyboard layout, US International	**6AV6881-0AU14-1AA0**

© Siemens AG 2024

Technical specifications

Article number	6AV6881-0AU14-0AA0	6AV6881-0AU14-1AA0
General information		
Product type designation	USB keyboard GERMAN	USB keyboard international US
Control elements		
Version of actuating element	Long-stroke key with 4 mm contact travel	Long-stroke key with 4 mm contact travel
Operating principle of the actuating element	Keyboard with long-stroke keys with membrane switching contacts	Keyboard with long-stroke keys with membrane switching contacts
• Input device		
• Scroll wheel	No	No
• Movement tracking	none	none
• Keyboard fonts		
• Design	Keyboard with long-stroke keys	Keyboard with long-stroke keys
• Keyboard assignment	105 keys, German layout	105 keys, international US layout
• Color of the buttons	Black	Black
• Color of the key inscription	White	White
• Key illumination	No	No
• Function keys	Yes	Yes
• Number of function keys	12	12
• Number of function keys with LEDs	0	0
• Programmable	No	No
• Number pad	Yes; Free-standing	Yes; Free-standing
• status LED displays	Yes; Num, Caps and Scroll	Yes; Num, Caps and Scroll
• for number pad	Yes	Yes
• for Shift keys	Yes	Yes
• Connection type		
• USB	Yes; USB 2.0 type A	Yes; USB 2.0 type A
• PS/2	No	No
• Cable length	0 m; See cable length	0 m; See cable length
• Frame size/design		
• Standard	Yes; For industrial applications	Yes; For industrial applications
Installation type/mounting		
Mounting	Desktop	Desktop
Mounting type	none	none
Supply voltage		
Rated value (DC)	5 V; via USB	5 V; via USB
Battery		
Battery-operated	No; maintenance-free	No; maintenance-free
Interfaces		
Number of USB interfaces	1; USB 2.0	1; USB 2.0
Degree and class of protection		
IP (all-round)	IP68 all-round and dishwasher safe	IP68 all-round and dishwasher safe
IP (at the front)	USB connector without degree of protection	USB connector without degree of protection
Standards, approvals, certificates		
CE mark	Yes	Yes
UL approval	Yes; cUL	Yes; cUL
cULus	Yes; cUL	Yes; cUL
KC approval	Yes	Yes
EAC (formerly Gost-R)	Yes	Yes
BIS	No; required for export to India	No; required for export to India
RoHS conformity	Yes	Yes
Ambient conditions		
Suited for indoor use	Yes	Yes
Suited for outdoor use	No; possible under certain conditions	No; possible under certain conditions

© Siemens AG 2024

Technical specifications (continued)

Article number	6AV6881-0AU14-0AA0	6AV6881-0AU14-1AA0
• Ambient temperature during operation		
• min.	0 °C	0 °C
• max.	70 °C	70 °C
• Relative humidity		
• Operation, max.	80 %; no condensation	80 %; no condensation
• Condensation permissible	No	No
Operating systems		
• Runs under operating system		
• Windows CE	Yes	Yes
• Windows Vista	Yes	Yes
• Windows XP	Yes	Yes
• Windows 7	Yes	Yes
• Windows 8	Yes	Yes
• Windows 10	Yes	Yes
Cables		
Cable length	1.5 m; USB	1.5 m; USB
Mechanics/material		
Material		
• Plastic	Yes; Black	Yes; Black
Enclosure material (front)		
• Plastic	Yes; ABS with antimicrobial coating	Yes; ABS with antimicrobial coating
Enclosure color (front)	Black	Black
Enclosure color (rear)	Black	Black
• Torques/forces		
• Breakdown torque	0.53 N·m; Switching force buttons	0.53 N·m; Switching force buttons
• Service life		
• Number of operating cycles, keys	10 000 000; Operations (minimum)	10 000 000; Operations (minimum)
Dimensions		
Width	459 mm	459 mm
Height	35 mm	35 mm
Depth	174 mm	174 mm
Weights		
Weight (without packaging)	800 g	800 g
Scope of supply		
Delivery quantity in pieces	1	1
Other		
printable with laser printer	No	No
Merchandise	Yes; GETT TKL-105	Yes; GETT TKL-105
Manufacturer name	GETT Gerätetechnik GmbH	GETT Gerätetechnik GmbH
Manufacturer's address	Mittlerer Ring 1, 08233 Treuen (Vogtland), Germany	Mittlerer Ring 1, 08233 Treuen (Vogtland), Germany
contacting the manufacturer	Phone +49 37468 660-0, email: info@gett.de	Phone +49 37468 660-0, email: info@gett.de
Target devices	For SIMATIC HMI devices and IPCs with the appropriate slot	For SIMATIC HMI devices and IPCs with the appropriate slot
Note:	Corresponds to KL21203	Corresponds to KL24603

© Siemens AG 2024

Overview

A smart card reader can be used to check operator privileges on a Single Station or Client. The smart card reader works with SIMATIC Logon, the user administration and access control function integrated in SIMATIC PCS 7 (see section "Industrial Security", paragraph "SIMATIC Logon").

The smart card has the function of a "key" for the operator station. Inputs are only permissible as long as it is inserted in the reader. Such unambiguous identification is particularly necessary for plants having to comply with validation requirements.

Selection and ordering data

USB smart card reader Desktop unit with USB connecting cable	**6ES7652-0XX02-1XC0**
SIMATIC PCS 7 TCOS 3.0 chip card for chip card reader Pack with 10 units; 1 card is required per user	**6ES7652-0XX00-1XD2**

Technical specifications

Type	USB smart card reader
Interface	
Interface type	USB 2.0 CCID (Chip Card Interface Device), USB 1.1 compatible
Transmission rate	12 Mbps
Power supply	Via USB
Design and equipment	
Design	Desktop unit with foot for vertical positioning; adhesive pad at rear for optional mounting
Material	ABS
Color	Two shades of gray
Status display	Two-color LED
Connecting cable length	1.8 m
Dimensions and weights	
Dimensions (L × W × D in mm)	80 × 67 × 28
Weight without foot	110 g
Weight with foot	141 g
Ambient conditions in operation	
Temperature	0 ... 55 °C
Humidity	10 ... 90 %
Service life/MTBF	
Insertion cycles	100 000
MTBF (Mean Time Between Failures)	500 000 h
Test symbols / certifications	• Microsoft WHQL (Windows Hardware Quality Lab) • ISO 7816 • USB 2.0 (USB 1.1 compatible) • CCID (Chip Card Interface Device) • GSA Fips201 approved product list
Safety/environmental standards	• CE • WEEE • FCC • UL • VCCI • MIC • RoHS

© Siemens AG 2024

Overview

Touch pen, thick, incl. wall bracket for screw mounting

Touch pens are effective input tools for operating the touch screen, and are especially helpful when working with gloves or under extreme ambient conditions.

You can use the touch pen to operate small buttons and input boxes with pint-point accuracy and also avoid scratches and soiling.

The thick touch pen for resistive touch screens offered here is suitable for all SIMATIC PCS 7 OS Clients and SIMATIC PCS 7 compact systems with TFT touch panels:

- PCS 7 OS Client IPC477E
- SIMATIC PCS 7 BOX in design variant with panel front

Selection and ordering data

Touch pen, thick, resistive technology For resistive touch screen, optimized for operation with gloves, including screw-on wall-mounting bracket	**6AV7672-1JB00-0AA0**

© Siemens AG 2024

Technical specifications

Article number	6AV6645-7AB14-0AS1	6AV6881-0AV21-0AA0	6AV6881-0AV22-0AA0
General information			
Product type designation	touch pen, thin, aluminum, resistive technology	universal touch pen system (resistive/capacitive), including support	universal touch pen system (resistive/capacitive), including support
Control elements			
• Touch operation			
• operator help touch operation design (resistive)	Yes	Yes	Yes
• operator help touch operation design (capacitive)	No	Yes	Yes
• Frame size/design			
• Standard	Yes; For industrial applications	Yes; For industrial applications	Yes; For industrial applications
• Exceptional		Yes; Spare caps can be stowed in the pen	Yes; Spare caps can be stowed in the pen
• Ergonomic		Yes; With holder	Yes; With holder
Installation type/mounting			
Mounting type		Wall-mounting bracket can be mounted with mounting disk, 2x M3 screw or adhesive pads	Wall-mounting bracket can be mounted with mounting disk, 2x M3 screw or adhesive pads
Front mounting		Yes; also optimized for PRO Extension Unit 22.5 mm opening (from HS01)	Yes; also optimized for PRO Extension Unit 22.5 mm opening (from HS01)
Wall mounting/direct mounting	Yes; using approx. 35 cm retaining cord	Yes; using approx. 60 cm retaining cord	Yes; using approx. 60 cm retaining cord
Degree and class of protection			
IP (at the front)		IP65 (depending on mounting)	IP65 (depending on mounting)
Standards, approvals, certificates			
CE mark	No; No CE marking obligation	No; No CE marking obligation	No; No CE marking obligation
REACH	Yes	Yes; Threaded insert screw tip - according to Article 33 of the REACH Regulation, we hereby inform you that the threaded insert supplied by us contains a substance included on the REACH Candidate List (SVHC). The substance in question is lead. CAS number: 7439-92-1 / EC number: 231-100-4	Yes; Threaded insert screw tip - according to Article 33 of the REACH Regulation, we hereby inform you that the threaded insert supplied by us contains a substance included on the REACH Candidate List (SVHC). The substance in question is lead. CAS number: 7439-92-1 / EC number: 231-100-4
RoHS conformity	Yes	Yes	Yes
FDA-compliant			Yes; the included adhesive pads are RoHS compliant, but not FDA§177.2600 compliant
Ambient conditions			
Suited for indoor use	Yes	Yes	Yes
Suited for outdoor use	Yes	Yes; only suitable under certain conditions due to different environmental conditions; replacement cycle can be increased	Yes; only suitable under certain conditions due to different environmental conditions; replacement cycle can be increased
• Ambient temperature during operation			
• min.	-40 °C	-40 °C; at temperatures below 10 °C and above 30 °C, the use of suitable gloves is recommended	-40 °C; at temperatures below 10 °C and above 30 °C, the use of suitable gloves is recommended
• max.	80 °C	80 °C; at temperatures below 10 °C and above 30 °C, the use of suitable gloves is recommended	80 °C; at temperatures below 10 °C and above 30 °C, the use of suitable gloves is recommended
• Relative humidity			
• Operation, max.	90 %	95 %	95 %
Mechanics/material			
Material			
• Plastic		Yes; Attachment cord	Yes; Attachment cord
• Aluminum	Yes; pen, anodized	Yes; pen, anodized	
• Stainless steel			Yes; food safe, suitable for F&B
Enclosure material (front)			

© Siemens AG 2024

Technical specifications (continued)

Article number	6AV6645-7AB14-0AS1	6AV6881-0AV21-0AA0	6AV6881-0AV22-0AA0
• Plastic		Yes; pen holder	Yes; pen holder
Color	Aluminum paint	black, anodized	stainless steel, polished
Enclosure color (front)		Black	Black
Dimensions			
Length	125 mm	150 mm	150 mm
Diameter	8 mm	14 mm	14 mm
Enclosure diameter		37 mm; Diameter wall-mounting bracket	37 mm; Diameter wall-mounting bracket
Mounting cutout, height		39 mm; Height wall-mounting bracket	39 mm; Height wall-mounting bracket
Weights			
Weight (without packaging)		0.13 kg	0.13 kg
Scope of supply			
Delivery quantity in pieces	5; Incl. retaining cord for Mobile Panel 277 10"	1; 1x touch pen, 1x attachment cord, 1x resistive/capacitive cap, 1x resistive cap (in the touch pen), 1x complete wall bracket	1; 1x touch pen, 1x attachment cord, 1x resistive/capacitive cap, 1x resistive cap (in the touch pen), 1x complete wall bracket
Other			
Merchandise	Yes; touch pen, thin, aluminum, resistive technology	Yes; ELO touch pen, small	Yes; touch pen V2A
Manufacturer name	QUERUM products UG	QUERUM products UG	QUERUM products UG
Manufacturer's address	Wirtsstr. 23, 85110 Kipfenberg-Böhming, Germany	Wirtsstr. 23, 85110 Kipfenberg-Böhming, Germany	Wirtsstr. 23, 85110 Kipfenberg-Böhming, Germany
contacting the manufacturer	email: querumproducts@web.de	email: querumproducts@web.de	email: querumproducts@web.de
Target devices	for resistive touch screens	For common capacitive and resistive touch systems	For common capacitive and resistive touch systems
Note:	length of the interconnecting lead approx. 35 cm	length of the interconnecting lead approx. 55 cm ... 62 cm	length of the interconnecting lead approx. 55 cm ... 62 cm

© Siemens AG 2024

13/2	**Introduction**
13/5	**AS 410-5H and AS 410E modular systems**
13/12	Standard automation systems
13/18	High-availability automation systems
13/26	Safety-related automation systems
13/36	**Complementary S7-400 systems**
13/39	Standard automation systems
13/45	High-availability automation systems
13/53	Safety-related automation systems
13/61	**SIPLUS automation systems**

© Siemens AG 2024

Overview

SIMATIC PCS 7 automation systems in various designs: Modular S7-400 systems plus Microbox system

Automation systems are available in different designs for the SIMATIC PCS 7 process control system. The automation performance can therefore be finely scaled within wide limits.

The automation systems offered can be classified as follows:

- Modular systems of the S7-400 series with hardware controller in the versions "Standard", "High availability" and "Safety-related"
  - AS 410-5H/AS 410E automation systems
  - Complementary S7-400 systems

© Siemens AG 2024

Application

Automation system with APL	AS 412H |←----- |←-----	AS 414-3 -------- AS 410E[1)]	AS 414-3IE --------	AS 414H -------- -----→|	AS 416-2	AS 416-3	AS 416-3IE	AS 416H --------	AS 417-4 --------	AS 417H -----→|
						AS 410 with CPU 410-5H					
Analog value measurements	10	150	150	100	300	500	500	400	800	600
Digital value measurements	20	300	300	250	600	1 000	1 000	800	1 400	1 000
PID controls	5	50	50	50	100	200	200	150	250	200
Motors	7	75	75	75	150	250	250	200	450	400
Valves	7	75	75	75	150	250	250	200	450	400
SFC	0	15	15	15	60	100	100	100	200	200
Steps	0	150	150	150	700	1 000	1 000	1 000	2 000	2 000
Dosing	0	5	5	3	20	25	25	25	50	50
Digital inputs DI	30	450	450	300	900	1 500	1 500	1 200	2 200	1 800
Digital outputs DO	10	150	150	110	300	500	500	400	750	650
Analog inputs AI	15	225	225	150	450	750	750	600	1 100	900
Analog outputs AO	5	75	75	50	150	250	250	200	350	350
Process objects (PO)	30	450	450	350	900	1 500	1 500	1 200	2 200	2 000

Typical mixed configuration limits for SIMATIC PCS 7 automation systems, based on the SIMATIC PCS 7 Advanced Process Library (APL)

[1)] Up to 200 process objects

Note:

The values quoted here are not AS-specific maximum values for the particular item. Instead, they represent a typical distribution of the available total capacity of the AS during mixed operation of all the items of a contiguous block. The number of process objects is not an absolute value, but depends on the library used as well as on the number and type of blocks used in the application.

Modular automation systems of the S7-400 range

AS type	CPU	Interfaces PN/IE (2 ports)	MPI/DP	DP	DP module as optional plug-in
Standard systems					
AS 410S	CPU 410-5H Process Automation and CPU 410E	2	–	1	–
AS 414-3	CPU 414-3	–	1	1	1
AS 414-3IE	CPU 414-3 PN/DP	1	1	–	1
AS 416-2	CPU 416-2	–	1	1	–
AS 416-3	CPU 416-3	–	1	1	1
AS 416-3IE	CPU 416-3 PN/DP	1	1	–	1
AS 417-4	CPU 417-4	–	1	1	2
High availability and safety-oriented systems					
AS 410H/F/FH	CPU 410-5H Process Automation and CPU 410E (1 × or 2 ×)	2	–	1	–
AS 412H/F/FH	CPU 412-5H (1 × or 2 ×)	1	1	1	–
AS 414H/F/FH	CPU 414-5H (1 × or 2 ×)	1	1	1	–
AS 416H/F/FH	CPU 416-5H (1 × or 2 ×)	1	1	1	–
AS 417H/F/FH	CPU 417-5H (1 × or 2 ×)	1	1	1	–

The rugged automation systems of the S7-400 series are suitable for universal use. They are characterized by high processing and communication performance. The product range offered basically differs in the following features:

- **AS 410-5H/AS 410E automation systems**
  - Preferred systems for new plants with SIMATIC PCS 7
  - Suitable for SIMATIC PCS 7 as of V8.0+SP1[1)] or as of V9.0 (AS 410E)
  - Standard systems, fault-tolerant systems, and safety-oriented systems are based on the very same CPU
  - Performance of the general-purpose CPU 410-5H is scalable and expandable based on the number of process objects
  - Changes in the type of module during operation (TCiR) possible together with the SIMATIC PCS 7 Engineering System V8.1 and higher
  - Redundant PROFINET configurations and configuration changes during operation for PROFINET in singular and redundant applications

© Siemens AG 2024

Application (continued)

- **Complementary S7-400 systems**
  - Can be used in plants with SIMATIC PCS 7 V8/V7
  - As an alternative to AS 410-5H/AS 410E, primarily in systems with SIMATIC PCS 7 V7
  - Scalable based on types of CPU differing in performance

The CPU for all automation systems of the S7-400 series is already equipped as standard with the PROFIBUS DP fieldbus connection. Depending on the type of CPU, one or two further PROFIBUS DP interfaces are possible directly on the CPU using additive IF 964 DP interface modules. If required, up to 10 PROFIBUS communications modules can be additionally operated on each CPU.

S7-400 automation systems can be integrated via a PROFINET interface into the CPU in PROFINET IO, some types via communications module CP 443-1 as well.

1) An additional Hardware Upgrade Package (HUP CPU 410-5H) is required for SIMATIC PCS 7 V8.0+SP1

More information

Online configurators

Selected SIMATIC S7-400 components are combined as "AS bundles" according to the task involved for the modular SIMATIC PCS 7 automation systems. Configurators are available in the Industry Mall help you to assemble the AS bundles:

- Online configurators for AS 410 automation systems
  - SIMATIC PCS 7 AS 410 Single Station configurator
  - SIMATIC PCS 7 AS 410 Redundancy Station configurator
- Online configurators for complementary S7-400 systems
  - SIMATIC PCS 7 AS Single Station configurator
  - SIMATIC PCS 7 AS Redundancy Station configurator

© Siemens AG 2024

Overview

AS 410S on CR3 rack

With the rugged all-round AS 410 system, the SIMATIC PCS 7 process control system offers an exclusive automation system from the SIMATIC S7-400 series, which can be used in all domains due to its versatility.

The rugged AS 410 is a modern, future-oriented, all-round system for the process industry. Its versatility means it can be used in all areas – as a standard AS 410S system, as a high-availability AS 410H or as safety-related AS 410F/FH. More and more innovative functions are being exclusively combined with this automation system, for example redundant PROFINET configurations and configuration changes during operation for PROFINET in singular and redundant applications

With its high-performance hardware and optimized firmware, the innovative **CPU 410-5H Process Automation** of the AS 410 covers the entire performance range of conventional AS 412 to AS 417 automation systems. Its automation performance can be scaled with System Expansion Cards based on the number of SIMATIC PCS 7 process objects (POs) as follows:

- 100 POs
- 500 POs
- 1 000 POs
- 1 600 POs
- ≥ 2 000 POs (PO 2k+)

The type reduction to a single CPU offers numerous advantages. It significantly simplifies selection and configuration of the automation system as well as spare part inventory and plant expansion.

The AS 410E automation systems with **CPU 410E Process Automation** is a cost-saving alternative for applications with a few process objects. Based on CPU 410-5H hardware, it offers the same benefits for applications with up to 200 PO.

© Siemens AG 2024

Design

Like all SIMATIC PCS 7 automation systems of the S7-400 series, AS 410 automation systems are available as "AS bundles" as follows:

- Single components bundled per system in one delivery
- Pre-assembled and tested complete systems (no extra charge compared to delivery of single components)

The AS bundles come furnished with the SIMATIC PCS 7 Runtime license for 100 process objects (PO). Building on this, the number of process objects can be increased with cumulative AS Runtime licenses for 100, 1 000 or 10 000 POs.

The configuration of the AS bundles as well as the article numbers can be defined by selecting pre-configured ordering units. System-specific ordering configurations are available in tabular form for this purpose in the sections "Standard automation systems", "Fault-tolerant automation systems" and "Safety-related automation systems".

For interactive configuration of AS bundles, there are also two online configurators available in the Industry Mall:

- SIMATIC PCS 7 AS 410 Single Station configurator
- SIMATIC PCS 7 AS 410 Redundancy Station configurator

CPU, aluminum rack (except UR1), optional redundancy or redundant power supply modules (in 4 A and 10 A variants), communications modules and sync modules of the SIMATIC PCS 7 AS 410 bundles have an additional coating (conformal coating).

AS 410 bundles for operating temperatures up to 70 °C

The AS 410 bundles are usually designed for operating temperatures up to 60 °C. Additional designs are available for extreme conditions; these are permitted for operating temperatures up to 70 °C. Their components mainly carry the designation "XTR" (extended temperature range) in their names. All components of the "AS 410 bundles for the extended temperature range (XTR)" also have an additional coating (conformal coating).

The article numbers of the AS 410 bundles for the extended temperature range (XTR) can be defined in the sections "Standard automation systems", "High availability automation systems" and "Safety-related automation systems" by means of an individual configuration table.

Flexible and scalable availability

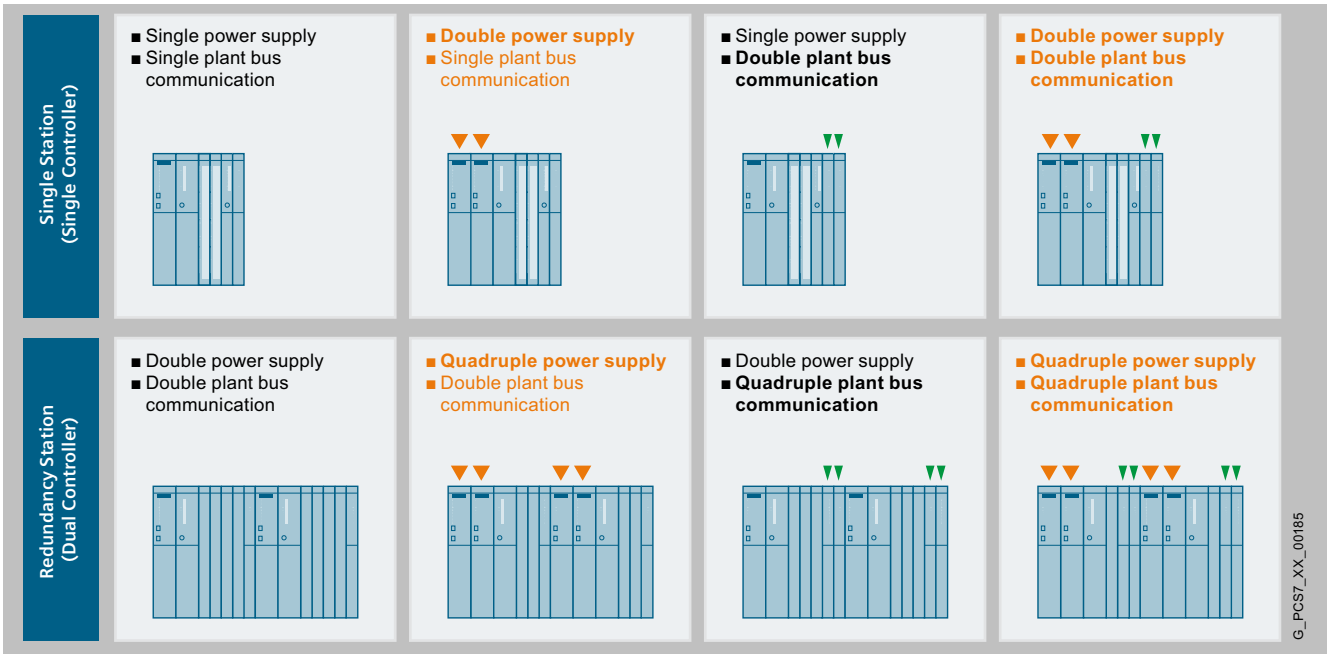

A particular characteristic of the modular S7-400 systems is the flexible and scalable availability of various components.

For a SIMATIC PCS 7 AS Single Station of the AS 410 type, you have the option of specifically increasing the availability by implementing a redundant configuration of the power supply or the Industrial Ethernet communications module, and combining these measures.

Even the AS Redundancy Station of the AS 410 type with its redundant CPUs offers significantly higher availability. It operates according to the 1oo2 principle, in which a switch is made from the active subsystem to the standby system in the event of a fault. Starting from here, you can double the power supply or the Industrial Ethernet communications module for each subsystem, and combine these measures.

© Siemens AG 2024

Design (continued)

CPU 410-5H Process Automation: the "all-rounder" for process automation

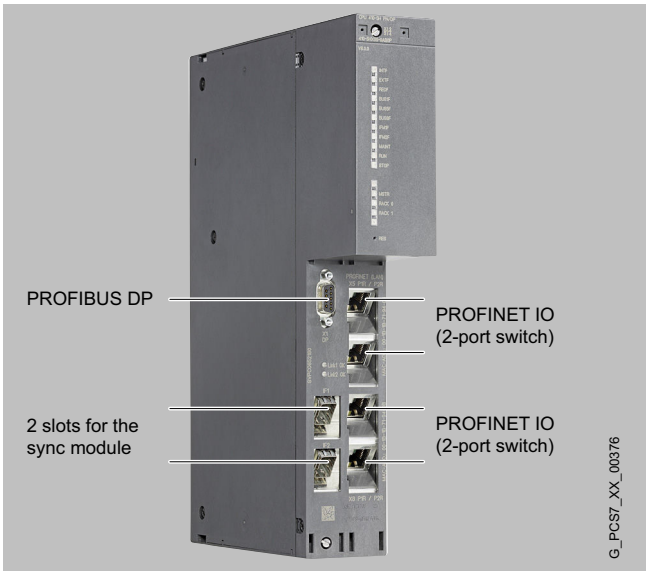

CPU 410-5H Process Automation

The CPU 410-5H Process Automation is at the heart of the standard automation systems as well as the high-availability and safety-related AS 410 automation systems. With Expansion Cards for 100 PO, 500 PO, 1 000 PO, 1 600 PO and PO 2k+ (corresponds to ≥ 2 600 PO), you can define your performance for your specific application with up to around 2 600 PO.

If the performance limit defined by the System Expansion Card is reached during configuration, commissioning or operation, a subsequent increase in performance is possible without replacing the hardware by using an appropriate number of CPU 410 Expansion Packs 100 POs/500 POs.

As shown in the figure, CPU 410-5H Process Automation is equipped with two PROFINET IO interfaces (2-port switch in each case) for up to 250 I/O devices and a PROFIBUS DP interface for up to 96 PROFIBUS DP slaves. Two integrated slots allow the synchronization of two redundant subsystems via sync modules and sync cables (FOC).

CPU 410-5H Process Automation supports NTP as well as S7 time synchronization.

Other features include:

- Integrated 48 MB load memory and 32 MB work memory each for program and data
- Cycle time up to 10 ms/9 process tasks
- Total number of I/Os (on PROFIBUS DP and PROFINET IO) approx. 7 500, 16 KB each for inputs and outputs
- Additional protection of the circuit board with coating (conformal coating)
- Expanded temperature range during operation up to 70 °C (as of product version 2)
- High-precision time stamping
- Recessed RESET button
- Preset hardware parameters (PCS 7 skinning)
- Changes in the type of module during operation (TCiR) in association with the SIMATIC PCS 7 Engineering System V8.1 and higher

CPU 410E for small applications

The cost-effective CPU 410E is available for applications with a few process objects. for which it offers the same benefits as the CPU 410-5H in terms of

- Flexibility
  - Standard, high-availability and fail-safe applications
  - Identical hardware as with CPU 410-5H
- Ruggedness
  - Conformal coating
  - Extended temperature range up to 70 °C
- Secure investment
  - 1 PROFIBUS and 2 PROFINET interfaces
  - Innovations in firmware updates

Restrictions compared to CPU 410-5H relate to the number of POs, work memory and I/O data. The following table shows the main differences between and features common to the two CPUs.

© Siemens AG 2024

Design (continued)

	CPU 410E	CPU 410-5H
Work memory (for program and data)	4 MB	32 MB
Load memory (integrated, non-volatile)	48 MB	48 MB
CPU processing times for bit operations, typ.	7.5 ns	7.5 ns
I/O data	1536 bytes inputs/outputs	16 KB inputs/outputs
Number of process objects	200 or 500	100 to 2 k+

I/O connection via PROFIBUS DP

The distributed process I/O can be integrated into a PROFIBUS DP segment either directly or via a lower-level fieldbus (PROFIBUS PA or FOUNDATION Fieldbus H1). For details, see the "Industrial Communication" chapter, "PROFIBUS DP", "PROFIBUS PA" and "FOUNDATION Fieldbus H1" sections.

PROFIBUS DP segments with distributed process I/O can be operated on a PROFIBUS DP interface in the CPU and on additive CP 443-5 Extended (conformal coating) PROFIBUS DP interface modules. You can configure up to 4 individual or redundant CP 443-5 Extended PROFIBUS DP interface modules (conformal coating) for an automation system using the configurators for SIMATIC PCS 7 automation systems in the Industry Mall as well as in the catalog sections "Standard automation systems", "Fault-tolerant automation systems" and "Safety-related automation systems".

You can additionally implement further PROFIBUS interfaces using separately ordered CP 443-5 Extended PROFIBUS DP interface modules (conformal coating). According to the manual, up to 10 CP 443-5 Extended modules can be operated in one automation system.

I/O connection via PROFINET IO

It is easy to efficiently connect AS 410 automation systems to remote I/O stations via the PROFINET IO interfaces integrated in the CPU 410-5H Process Automation, for example to remote ET 200M or ET 200SP HA I/O stations (see also "Industrial Communication" chapter, "PROFINET" section). PROFINET IO interfaces made available by additive communications modules of type CP 443-1 cannot be used.

© Siemens AG 2024

Technical specifications

Article number	6ES7410-5HX08-0AB0	6ES7410-5HM08-0AB0
General information		
Product type designation	CPU 410-5H	CPU 410E
Design of PLC basic unit	With Conformal Coating (ISA-S71.04 severity level G1; G2; G3) and operating temperature to 70 °C	With Conformal Coating (ISA-S71.04 severity level G1; G2; G3) and operating temperature to 70 °C
• Product function		
• SysLog	Yes; via TCP; up to 4 receivers can be parameterized; buffer capacity max. 3 200 entries	Yes; via TCP; up to 4 receivers can be parameterized; buffer capacity max. 3 200 entries
• Field interface security	Yes	Yes
• Engineering with		
• Programming package	SIMATIC PCS 7 V9.0 or higher	SIMATIC PCS 7 V9.0 or higher
Processor		
CPU speed	450 MHz; Multi-processor system	450 MHz; Multi-processor system
Memory		
PCS 7 process objects	100 ... approx. 2 600, adjustable with System Expansion Card	200; max.
• Work memory		
• integrated	32 Mbyte; max., dependent on the System Expansion Card used	4 Mbyte
• integrated (for program)	Dependent on the System Expansion Card used	4 Mbyte; max.
• integrated (for data)	Dependent on the System Expansion Card used	4 Mbyte; max.
• expandable	Dependent on the System Expansion Card used	No
CPU processing times		
average processing time of PCS 7 typicals	110 µs; with APL Typicals	110 µs; with APL Typicals
Process tasks, max.	9; Individually adjustable from 10 ms to 5 s	9; Individually adjustable from 10 ms to 5 s
Counters, timers and their retentivity		
• IEC counter		
• present	Yes	Yes
• IEC timer		
• present	Yes	Yes
Data areas and their retentivity		
• Flag		
• Size, max.	16 384 byte	16 384 byte
Address area		
• I/O address area		
• Inputs	16 kbyte; max., dependent on the System Expansion Card used	2 048 byte; max. 1 536 bytes for inputs or outputs per interface
• Outputs	16 kbyte; max., dependent on the System Expansion Card used	2 048 byte; max. 1 536 bytes for inputs or outputs per interface
Time of day		
• Clock		
• Hardware clock (real-time)	Yes	Yes
• Operating hours counter		
• Number	16	16
Interfaces		
Number of PROFINET interfaces	2	2
Number of RS 485 interfaces	1; PROFIBUS DP	1; PROFIBUS DP
Number of other interfaces	2; 2x synchronization	2; 2x synchronization
1. Interface		
Interface type	RS 485 / PROFIBUS	RS 485 / PROFIBUS

© Siemens AG 2024

Technical specifications (continued)

Article number	6ES7410-5HX08-0AB0	6ES7410-5HM08-0AB0
• Protocols		
• PROFIBUS DP master	Yes	Yes
• PROFIBUS DP slave	No	No
• PROFIBUS DP master		
• Number of DP slaves, max.	96	96
• Number of slots per interface, max.	1 632	1 632
2. Interface		
Interface type	PROFINET	PROFINET
• Protocols		
• PROFINET IO Controller	Yes	Yes
• PROFINET IO Device	No	No
• PROFINET CBA	No	No
• PROFINET IO Controller		
• Services		
• Number of connectable IO Devices, max.	250	250
• Number of connectable IO Devices for RT, max.	250	250
3. Interface		
Interface type	PROFINET	PROFINET
• Protocols		
• PROFINET IO Controller	Yes	Yes
• PROFINET IO Device	No	No
• PROFINET CBA	No	No
• PROFINET IO Controller		
• Services		
• Number of connectable IO Devices, max.	250	250
• Number of connectable IO Devices for RT, max.	250	250
4. Interface		
Interface type	Pluggable synchronization submodule (FO)	Pluggable synchronization submodule (FO)
Plug-in interface modules	Synchronization module 6ES7960-1AA06-0XA0, 6ES7960-1AB06-0XA0 or 6ES7960-1AA08-0XA0	Synchronization module 6ES7960-1AA06-0XA0, 6ES7960-1AB06-0XA0 or 6ES7960-1AA08-0XA0
5. Interface		
Interface type	Pluggable synchronization submodule (FO)	Pluggable synchronization submodule (FO)
Plug-in interface modules	Synchronization module 6ES7960-1AA06-0XA0, 6ES7960-1AB06-0XA0 or 6ES7960-1AA08-0XA0	Synchronization module 6ES7960-1AA06-0XA0, 6ES7960-1AB06-0XA0 or 6ES7960-1AA08-0XA0
Protocols		
Supports protocol for PROFINET IO	Yes	Yes
PROFINET CBA	No	No
PROFIsafe	Yes	Yes
PROFIBUS	Yes	Yes
AS-Interface	Yes; Via add-on	Yes; Via add-on
• SIMATIC communication		
• S7 routing	Yes	Yes
• Further protocols		
• Foundation Fieldbus	Yes; via DP/FF Link	Yes; via DP/FF Link
• MODBUS	Yes; Via add-on	Yes; Via add-on
communication functions / header		
PG/OP communication	Yes	Yes
Data record routing	Yes	Yes

© Siemens AG 2024

Technical specifications (continued)

Article number	6ES7410-5HX08-0AB0	6ES7410-5HM08-0AB0
• S7 communication		
• supported	Yes	Yes
• Number of connections		
• overall	120	120
Ambient conditions		
• Ambient temperature during operation		
• min.	0 °C	0 °C
• max.	70 °C	70 °C
configuration / header		
• Know-how protection		
• User program protection/password protection	Yes	Yes
• Block encryption	Yes; With S7 block Privacy	Yes; With S7 block Privacy
Dimensions		
Width	50 mm	50 mm
Height	290 mm	290 mm
Depth	219 mm	219 mm
Weights		
Weight, approx.	1.1 kg	1.1 kg

Accessories

Backup batteries

Lithium backup batteries of type AA with 2.3 Ah are used in the power supply modules of all SIMATIC PCS 7 automation systems of the S7-400 range (AS bundles). Since lithium batteries are easily inflammable, more rigorous transport and storage regulations apply to them.

To avoid subjecting the AS bundles to these more rigorous transport and storage regulations, the backup batteries must be ordered and delivered separately (Article No. 6ES7971-0BA00 or 6ES7971-0BA02).

The following backup batteries are required depending on the configuration of the AS bundles:

- SIMATIC PCS 7 AS Single Station with
  - 1 power supply module: 2 units
  - 2 redundant power supply modules: 4 units
- SIMATIC PCS 7 AS Redundancy Station with
  - 2 power supply modules: 4 units
  - 2 x 2 redundant power supply modules: 8 units

© Siemens AG 2024

Overview

Standard AS 410S automation system

The AS 410S modular standard automation systems are suitable for general use. These are always your first choice if high availability through redundancy and safety-related functions are not relevant for the application.

In the range from 100 to approx. 2 600 POs, their performance can be customized to meet the task at hand using System Expansion Cards.

An AS 410S is also the base system for a fault-tolerant (AS 410H) or a safety-related automation system (AS 410F, AS 410FH). Your decision for the AS 410S is therefore not final, you can remain flexible. If the task changes, the automation system can be used differently at any time and the target system can be expanded accordingly.

Design

Individual configuration of AS bundles

The configuration of the standard automation systems as well as the article numbers can be defined by selecting pre-configured ordering units.

Typical combinations can be selected from the tables in the "Ordering data" section of the printed catalog. The complete range is available to you via the SIMATIC PCS 7 AS 410 Single Station online configurator in the Industry Mall.

Subsequent increase in performance

If the performance limit defined by the ordered System Expansion Card is reached during configuration, commissioning or operation, a subsequent increase in performance is possible by using an appropriate number of CPU 410 Expansion Packs 100 POs/500 POs. Hardware modifications are not necessary.

I/O connection via PROFIBUS DP

Several PROFIBUS DP segments with distributed process I/Os can be operated on one standard automation system. A PROFIBUS DP interface is already integrated in the CPU 410-5H Process Automation. Up to four additional PROFIBUS DP interfaces can be configured using additive PROFIBUS DP interface modules CP 443-5.

I/O connection via PROFINET IO

Standard AS 410S automation systems can only be connected to remote I/O stations via the two PROFINET interfaces (each with 2-port switch) integrated in the CPU 410-5H Process Automation, for example to remote ET 200M/ET 200SP HA I/O stations (see also "Industrial Communication" chapter, "PROFINET" section).

The availability of the I/O devices can be increased by a ring topology with media redundancy (MRP). If the transmission link in the ring is interrupted at a given location, for example, due to a break in the ring cable or the failure of a station, the redundancy manager, e.g. the CPU, immediately activates the alternative communication path.

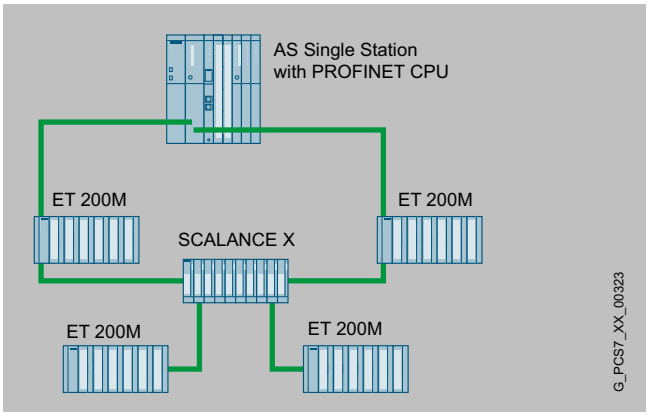

Example for PROFINET IO communication with media redundancy

Communication via the Industrial Ethernet (IE) plant bus

If the PROFINET interfaces integrated in the CPU are not used for PROFINET IO, they can then also be used for the connection to the Industrial Ethernet plant bus. Otherwise, the AS 410S standard automation system can be connected to the Industrial Ethernet plant bus via the CP 443-1 communications module (conformal coating). If necessary, the availability of plant bus communication can be increased by using a second CP 443-1 communications module (conformal coating).

Redundant power supply

If you have two separate power supply networks for your plant, you can increase the availability of the AS 410S standard automation systems by using two redundant power supplies.

© Siemens AG 2024

Design (continued)

Runtime licenses

The AS bundles come furnished with the SIMATIC PCS 7 Runtime license for 100 POs. The number of process objects can be extended by additional Runtime licenses for 100, 1 000 or 10 000 POs. The process objects of additional Runtime licenses can be added to process objects which already exist. The number and type (e.g. 100 or 1 000) of additional Runtime licenses is irrelevant with regard to the implementable quantity framework.

Selection and ordering data

Standard automation systems with CPU 410-5H

	Article No.									
AS 410S CPU 410-5H with PROFIBUS DP and PROFINET IO interface 32 MB work memory (16 MB each for program and data) with SIMATIC PCS 7 AS Runtime license for 100 POs	**6ES7654-** ●	C	●	0	●	-	●	●	F	●
Type of delivery										
• Single components, not pre-assembled	5									
• Pre-assembled and tested	6									
System Expansion Card										
• System Expansion Card 100 POs			J							
• System Expansion Card 500 POs			L							
• System Expansion Card 1 000 POs			N							
• System Expansion Card 1 600 POs			P							
• System Expansion Card PO 2k+ (≥ 2 000)			Q							
• System Expansion Card 0 PO (blank)			R							
Additive Industrial Ethernet interface modules[1]										
• Without CP 443-1					0					
• 1 × CP 443-1[2]					3					
• 2 × CP 443-1[2]					4					
Racks										
• UR2 (9 slots), aluminum[1][2]							3			
• UR2 (9 slots), steel[1]							4			
• UR1 (18 slots), aluminum							5			
• UR1 (18 slots), steel							6			
• CR3 (4 slots), aluminum[2][3]							7			
Power supply (without backup batteries)										
• 1 × PS 407, 4 A for 120/230 V AC/DC[2][4]								A		
• 1 × PS 407, 10 A for 120/230 V AC/DC								B		
• 1 × PS 407, 10 A for 120/230 V AC/DC, optional redundancy[2]								C		
• 1 × PS 407, 20 A for 120/230 V AC/DC								D		
• 2 × PS 407, 10 A for 120/230 V AC/DC, redundant[2]								E		
• 1 × PS 405, 4 A for 24 V DC[2][4]								F		
• 1 × PS 405, 10 A for 24 V DC								G		
• 1 × PS 405, 10 A for 24 V DC, optional redundancy[2]								H		
• 1 × PS 405, 20 A for 24 V DC								J		
• 2 × PS 405, 10 A for 24 V DC, redundant[2]								K		
Additive PROFIBUS DP interface modules[1]										
• Without CP 443-5 Extended										0
• 1 × CP 443-5 Extended[2]										1
• 2 × CP 443-5 Extended[2]										2
• 3 × CP 443-5 Extended[2]										3
• 4 × CP 443-5 Extended[2]										4

1) Up to 5 CPs (Industrial Ethernet/PROFIBUS) can be plugged into the UR2 rack with a single power supply, or up to 3 CPs with a redundant power supply.
2) Conformal coating

© Siemens AG 2024

Selection and ordering data (continued)

3) Only in conjunction with 4 A power supplies
4) Only in conjunction with CR3 rack

Standard automation systems with CPU 410-5H for the expanded temperature range (XTR)

	Article No.									
AS 410S CPU 410-5H with PROFIBUS DP and PROFINET IO interface 32 MB work memory (16 MB each for program and data) with SIMATIC PCS 7 AS Runtime license for 100 POs	6ES7654- ●	C	●	0	●	-	●	●	F	●
Type of delivery										
• Single components, not pre-assembled	5									
• Pre-assembled and tested	6									
System Expansion Card										
• System Expansion Card 100 POs			J							
• System Expansion Card 500 POs			L							
• System Expansion Card 1 000 POs			N							
• System Expansion Card 1 600 POs			P							
• System Expansion Card PO 2k+ (≥ 2 000)			Q							
• System Expansion Card 0 PO (blank)			R							
Additive Industrial Ethernet interface modules										
• Without CP 443-1					0					
• 1 × CP 443-1					3					
• 2 × CP 443-1					4					
Racks										
• UR2 XTR (9 slots), aluminum[1]							3			
• CR3 XTR, 4 slots, aluminum[2]							7			
Power supply (without backup batteries)										
• 1 × PS 407, 4 A XTR for 120/230 V AC/DC[3]								A		
• 1 × PS 407, 10 A XTR for 120/230 V AC/DC, optional redundancy								C		
• 2 × PS 407, 10 A XTR for 120/230 V AC/DC, redundant								E		
• 1 × PS 405, 4 A XTR for 24 V DC[3]								F		
• 1 × PS 405, 10 A XTR for 24 V DC, optional redundancy								H		
• 2 × PS 405, 10 A XTR for 24 V DC, redundant								K		
Additive PROFIBUS DP interface modules										
• Without CP 443-5 Extended										0

1) Only in conjunction with 10 A power supplies
2) Only in conjunction with 4 A power supplies
3) Only in conjunction with CR3 rack

Standard automation systems with CPU 410E

	Article No.									
AS 410SE CPU 410E with PROFIBUS DP and PROFINET IO interface 4 MB work memory (2 MB each for program and data) with SIMATIC PCS 7 AS Runtime license for 100 POs and System Expansion Card PO 200M	6ES7654- ●	E	K	0	●	-	●	●	F	●
Type of delivery										
• Single components, not pre-assembled	5									
• Pre-assembled and tested	6									
Additive Industrial Ethernet interface modules[1]										
• Without CP 443-1					0					
• 1 × CP 443-1[2]					3					
• 2 × CP 443-1[2]					4					
Racks										
• UR2 (9 slots), aluminum[1][2]							3			
• UR2 (9 slots), steel[1]							4			
• CR3 (4 slots), aluminum[2][3]							7			

© Siemens AG 2024

Selection and ordering data (continued)

	Article No.									
Power supply (without backup batteries)										
• 1 × PS 407, 4 A for 120/230 V AC/DC[2)4)]								A		
• 1 × PS 407, 10 A for 120/230 V AC/DC								B		
• 1 × PS 407, 10 A for 120/230 V AC/DC, optional redundancy[2)]								C		
• 2 × PS 407, 10 A for 120/230 V AC/DC, redundant[2)]								E		
• 1 × PS 405, 4 A for 24 V DC[2)4)]								F		
• 1 × PS 405, 10 A for 24 V DC								G		
• 1 × PS 405, 10 A for 24 V DC, optional redundancy[2)]								H		
• 2 × PS 405, 10 A for 24 V DC, redundant[2)]								K		
Additive PROFIBUS DP interface modules[1)]										
• Without CP 443-5 Extended										0
• 1 × CP 443-5 Extended[2)]										1
• 2 × CP 443-5 Extended[2)]										2
• 3 × CP 443-5 Extended[2)]										3
• 4 × CP 443-5 Extended[2)]										4

1) Up to 5 CPs (Industrial Ethernet/PROFIBUS) can be plugged into the UR2 rack with a single power supply, or up to 3 CPs with a redundant power supply.
2) Conformal coating
3) Only in conjunction with 4 A power supplies
4) Only in conjunction with CR3 rack

Standard automation systems with CPU 410E for the expanded temperature range (XTR)

	Article No.									
AS 410SE CPU 410E with PROFIBUS DP and PROFINET IO interface 4 MB work memory (2 MB each for program and data) with SIMATIC PCS 7 AS Runtime license for 100 POs and System Expansion Card PO 200M	**6ES7654-** ●	E	K	0	●	-	●	●	F	●
Type of delivery										
• Single components, not pre-assembled	5									
• Pre-assembled and tested	6									
Additive Industrial Ethernet interface modules										
• Without CP 443-1					0					
• 1 × CP 443-1					3					
• 2 × CP 443-1					4					
Racks										
• UR2 XTR (9 slots), aluminum[1)]							3			
• CR3 XTR, 4 slots, aluminum[2)]							7			
Power supply (without backup batteries)										
• 1 × PS 407, 4 A XTR for 120/230 V AC/DC[3)]								A		
• 1 × PS 407, 10 A XTR for 120/230 V AC/DC, optional redundancy								C		
• 2 × PS 407, 10 A XTR for 120/230 V AC/DC, redundant								E		
• 1 × PS 405, 4 A XTR for 24 V DC[3)]								F		
• 1 × PS 405, 10 A XTR for 24 V DC, optional redundancy								H		
• 2 × PS 405, 10 A XTR for 24 V DC, redundant								K		
Additive PROFIBUS DP interface modules										
• Without CP 443-5 Extended										0

1) Only in conjunction with 10 A power supplies
2) Only in conjunction with 4 A power supplies
3) Only in conjunction with CR3 rack

© Siemens AG 2024

Selection and ordering data (continued)

Single components

Single components	
Single components for AS 410S standard automation systems	
CPU 410-5H Process Automation as spare part Conformal coating; for operating temperature up to 70 °C 32 MB work memory integrated (16 MB each for program and data); module occupies 2 slots	6ES7410-5HX08-0AB0
CPU 410-5H Process Automation 100 PO Bundle CPU bundle, consisting of CPU 410-5H Process Automation and PCS 7 System Expansion Card for 100 PO	6ES7654-5CJ00-0XF0
CPU 410-5H Process Automation 500 PO Bundle CPU bundle, consisting of CPU 410-5H Process Automation and PCS 7 System Expansion Card for 500 PO	6ES7654-5CL00-0XF0
CPU 410-5H Process Automation 1 000 PO Bundle CPU bundle, consisting of CPU 410-5H Process Automation and PCS 7 System Expansion Card for 1 000 PO	6ES7654-5CN00-0XF0
CPU 410-5H Process Automation 1 600 PO Bundle CPU bundle, consisting of CPU 410-5H Process Automation and PCS 7 System Expansion Card for 1 600 PO	6ES7654-5CP00-0XF0
CPU 410-5H Process Automation PO 2k+ Bundle CPU bundle, consisting of CPU 410-5H Process Automation and PCS 7 System Expansion Card for PO 2k+ (≥ 2 000)	6ES7654-5CQ00-0XF0
CPU 410 Expansion Pack For subsequent increase in performance of the CPU 410-5H process automation Upgrade option for 1 installation, independent of language Without SIMATIC PCS 7 Software Media Package	
• Goods delivery License key on USB flash drive, Certificate of License	
- 100 POs	6ES7653-2CA00-0XE0
- 500 POs	6ES7653-2CC00-0XE0
• Online delivery License key download, online Certificate of License : Email address required!	
- 100 POs	6ES7653-2CA00-0XK0
- 500 POs	6ES7653-2CC00-0XK0
PS 407 power supply module with battery compartment for 2 backup batteries, module occupies 2 slots	
• **4 A XTR** (conformal coating; for operating temperature up to 70 °C) 120/230 V AC/DC; 5 V DC/4 A, 24 V DC/0.5 A	6ES7407-0DA02-0AA1
• **10 A** 120/230 V AC/DC; 5 V DC/10 A, 24 V DC/1 A	6ES7407-0KA02-0AA0
• **10 A XTR, optional redundancy** (conformal coating; for operating temperature up to 70 °C) 120/230 V AC/DC; 5 V DC/10 A, 24 V DC/1 A	6ES7407-0KR02-0AA1
• **20 A** 120/230 V AC/DC; 5 V DC/20 A, 24 V DC/1 A	6ES7407-0RA02-0AA0
PS 405 power supply module with battery compartment for 2 backup batteries, module occupies 2 slots	
• **4 A XTR** (conformal coating; for operating temperature up to 70 °C) 24/48/60 V DC; 5 V DC/4 A, 24 V DC/0.5 A	6ES7405-0DA02-0AA1
• **10 A** 24/48/60 V DC; 5 V DC/10 A, 24 V DC/1 A	6ES7405-0KA02-0AA0
• **10 A XTR, optional redundancy** (conformal coating; for operating temperature up to 70 °C) 24/48/60 V DC; 5 V DC/10 A, 24 V DC/1 A	6ES7405-0KR02-0AA1
• **20 A** 24/48/60 V DC; 5 V DC/20 A, 24 V DC/1 A; with battery compartment for 2 backup batteries, module occupies 2 slots	6ES7405-0RA02-0AA0
Backup battery For PS 405/407, type AA, 3.6 V, 2.3 Ah	6ES7971-0BA00
XTR backup battery For PS 405/407, type AA, 3.6 V, 2.3 Ah; for operating temperatures up to 70 °C	6ES7971-0BA02
Aluminum rack	
• UR1, 18 slots	6ES7400-1TA11-0AA0
• UR2 XTR, 9 slots (conformal coating; for operating temperature up to 70 °C)	6ES7400-1JA11-0AA1
• CR3 XTR, 4 slots (conformal coating; for operating temperature up to 70 °C)	6ES7401-1DA01-0AA1
Steel rack	
• UR1, 18 slots	6ES7400-1TA01-0AA0
• UR2, 9 slots	6ES7400-1JA01-0AA0
Single components for AS 410E standard automation systems	
CPU 410E Process Automation as spare part Conformal coating; for operating temperature up to 70 °C 4 MB work memory integrated (2 MB each for program and data); module occupies 2 slots	6ES7410-5HM08-0AB0

© Siemens AG 2024

Selection and ordering data (continued)

Single components	
Runtime licenses for SIMATIC PCS 7 automation systems (can be added to existing licenses)	
SIMATIC PCS 7 AS Runtime license Language-neutral, floating license for 1 user Without SIMATIC PCS 7 Software Media Package	
• Goods delivery License key on USB flash drive, Certificate of License	

Single components	
- 100 POs	**6ES7653-2BA00-0XB5**
- 1 000 POs	**6ES7653-2BB00-0XB5**
- 10 000 POs	**6ES7653-2BC00-0XB5**
• Online delivery License key download, online Certificate of License : Email address required!	
- 100 POs	**6ES7653-2BA00-0XH5**
- 1 000 POs	**6ES7653-2BB00-0XH5**
- 10 000 POs	**6ES7653-2BC00-0XH5**

© Siemens AG 2024

Overview

Redundancy Station AS 410H

High availability automation systems are used to reduce the risk of production failures. The higher investment costs for high availability automation systems are frequently negligible compared to the costs resulting from production failures. The higher the costs of a production failure, the more worthwhile it is to use a high availability system.

High availability SIMATIC PCS 7 automation systems can be used in a system configuration on their own or together with standard and safety-related automation systems.

Design

The AS 410H, which consists of two redundant, galvanically isolated subsystems, can be mounted on a UR2-H compact rack with a split backplane bus or on two separate racks (UR1 or UR2). The configuration in two racks has the advantage that the redundant subsystems are spatially separated (for example, by a fire-proof wall) and can be located far apart from each other. Depending on the sync modules used, distances up to 10 m or up to 10 km are possible between the two subsystems. As a result of the electrical isolation, the system is also resistant to EMC interference.

Individual configuration of AS bundles

The configuration of the high availability automation systems and the article numbers can be defined by selecting pre-configured ordering units.

Typical combinations can be selected from the tables in the "Ordering data" section of the printed catalog. The complete range for selection is available via the SIMATIC PCS 7 AS 410 Redundancy Station online configurator in the Industry Mall.

Ordering information:

- For an AS 410H redundant configuration based on two AS Single Stations (AS 410S), you also require 4 sync modules (up to 10 m or up to 10 km) and 2 fiber-optic sync cables. The selection depends on the distance between the two AS single stations.
- FO sync cables longer than 1 m must always be ordered separately (2 cables required in each case).

Subsequent increase in performance/ use of redundant PROFINET (R1)

If the performance limit defined by the ordered System Expansion Card is reached during configuration, commissioning or operation, a subsequent increase in performance is possible by using an appropriate number of CPU 410 Expansion Packs 100 POs/500 POs. Hardware modifications are not necessary.

Aside from increasing performance, the redundancy functions of PROFINET can also be expanded. If a redundant PROFINET (R1) is to be used in place of PROFINET system redundancy (S2), this function can be expanded with the "CPU 410 Expansion Pack PN Red".

I/O connection via PROFIBUS DP

The distributed process I/O can be integrated into a PROFIBUS DP segment either directly or via a lower-level fieldbus (PROFIBUS PA or FOUNDATION Fieldbus H1).

Several PROFIBUS DP segments with distributed process I/Os can be operated on an AS 410H high availability automation system. A PROFIBUS DP interface is integrated in each of the two CPUs 410-5H Process Automation. Up to four more PROFIBUS DP interfaces with add-on CP 443-5 PROFIBUS DP interface modules (conformal coating) can be configured for each redundant subsystem.

With redundant PROFIBUS DP lines, the process I/Os can be connected to an AS 410H as follows:

- ET 200M remote I/Os stations with two IM 153-2 High Feature interface modules on a special bus module
- ET 200iSP remote I/Os stations with two IM 152-1 on a special terminal module
- Field devices on the PROFIBUS PA over a PA link to two redundant IM 153-2 High Feature interface modules
- Field devices on the FOUNDATION Fieldbus H1 via a redundant Compact FF Link pair
- Non-redundant PROFIBUS DP devices, e.g. ET 200S or ET 200pro remote I/O stations per Y-Link

© Siemens AG 2024

Design (continued)

I/O connection via PROFINET IO

High-availability AS 410H automation systems can be connected via PROFINET IO with remote I/O stations, for example, ET 200M or ET 200SP remote I/O stations. Only the PROFINET interfaces integrated in the CPUs can be used for this on the automation system.

The maximum availability with minimum fault reaction times is achieved by the AS 410H when used in conjunction with system redundancy of the I/O devices. System redundancy refers to a type of PROFINET IO communication in which each I/O device establishes a communication connection to each of the two CPUs of an AS 410H over the topological network. Then, the failure of a CPU does not automatically lead to failure of the connected I/O devices.

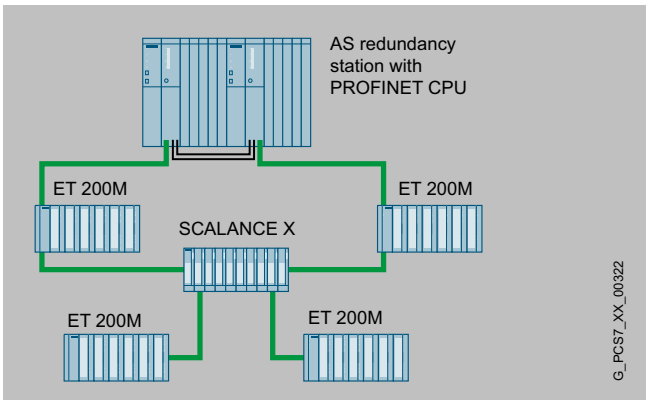

PROFINET IO communication with system redundancy

Communication via the Industrial Ethernet (IE) plant bus

If the PROFINET interfaces integrated in the CPUs of the AS 410H are not used for PROFINET IO, they can then also be used for the connection to the Industrial Ethernet plant bus. Otherwise, the two subsystems of the AS 410H can be connected to the plant bus using one CP 443-1 communications module (conformal coating) each.

The plant bus can be implemented in the form of a ring structure, which can also be configured with redundant architecture if the availability requirements are high. When there are two redundant rings it makes sense to configure two IE interface/communications modules in each case and to distribute their connections between the two rings (4-way connection). Double faults such as failure of the switch on ring 1 with simultaneous interruption of the bus cable on ring 2 can thus be tolerated.

Runtime licenses

The automation systems come furnished with the SIMATIC PCS 7 AS Runtime license for 100 process objects (PO). The number of process objects can be extended by additional Runtime licenses for 100, 1 000 or 10 000 POs. The process objects of additional Runtime licenses can be added to process objects which already exist. The number and type (e.g. 100 or 1 000) of additional Runtime licenses is irrelevant.

© Siemens AG 2024

Selection and ordering data

High-availability automation systems with CPU 410-5H

	Article No.									
AS 410H (redundancy station) 2 × CPU 410-5H with PROFIBUS DP and PROFINET IO interface 32 MB work memory (16 MB each for program and data) with SIMATIC PCS 7 AS Runtime license for 100 POs	**6ES7656-** ●	C	●	●	●	-	●	●	F	●
Type of delivery										
• Single components, not pre-assembled	5									
• Pre-assembled and tested	6									
System Expansion Card										
• 2 × System Expansion Card 100 PO			J							
• 2 × System Expansion Card 500 PO			L							
• 2 × System Expansion Card 1 000 PO			N							
• 2 × System Expansion Card 1 600 PO			P							
• 2 × System Expansion Card PO 2k+ (≥ 2 000)			Q							
• 2 × System Expansion Card 0 PO (empty)			R							
Sync modules and cables										
• 2 × 2 sync modules[2] for distances up to 10 m and 2 × FO sync cable, 1 m				3						
• 2 × 2 sync modules for up to 10 km and 2 × FO sync cable, 1 m, for testing				4						
Additive Industrial Ethernet interface modules[1]										
• Without CP 443-1					0					
• 2 × 1 CP 443-1[2]					3					
• 2 × 2 CP 443-1[2]					4					
Racks										
• 1 × UR2-H (2 × 9 slots), aluminum[1][2]							1			
• 1 × UR2-H (2 × 9 slots), steel[1]							2			
• 2 × UR2 (9 slots), aluminum[1][2]							3			
• 2 × UR2 (9 slots), steel[1]							4			
• 2 × CR3 (4 slots), aluminum[2][3]							7			
Power supply (without backup batteries)										
• 2 × PS 407, 4 A for 120/230 V AC/DC[2][4]								A		
• 2 × PS 407, 10 A for 120/230 V AC/DC								B		
• 2 × PS 407, 10 A for 120/230 V AC/DC, optional redundancy[2]								C		
• 2 × PS 407, 20 A for 120/230 V AC/DC								D		
• 2 × 2 PS 407, 10 A for 120/230 V AC/DC, redundant[2]								E		
• 2 × PS 405, 4 A for 24 V DC[2][4]								F		
• 2 × PS 405, 10 A for 24 V DC								G		
• 2 × PS 405, 10 A for 24 V DC, optional redundancy[2]								H		
• 2 × PS 405, 20 A for 24 V DC								J		
• 2 × 2 PS 405, 10 A for 24 V DC, redundant[2]								K		
Additive PROFIBUS DP interface modules[1]										
• Without CP 443-5 Extended										0
• 2 × 1 CP 443-5 Extended[2]										1
• 2 × 2 CP 443-5 Extended[2]										2
• 2 × 3 CP 443-5 Extended[2]										3
• 2 × 4 CP 443-5 Extended[2]										4

1) In configurations with UR2/UR2-H racks, up to 5 CPs (Industrial Ethernet/PROFIBUS) can be configured with a single power supply per subsystem, or up to 3 CPs per subsystem with a redundant power supply.
2) Conformal coating
3) Only in conjunction with 4 A power supplies
4) Only in conjunction with CR3 rack

© Siemens AG 2024

Selection and ordering data (continued)

High-availability automation systems with CPU 410-5H for the expanded temperature range (XTR)

	Article No.									
AS 410H (redundancy station) 2 × CPU 410-5H with PROFIBUS DP and PROFINET IO interface 32 MB work memory (16 MB each for program and data) with SIMATIC PCS 7 AS Runtime license for 100 POs	**6ES7656-** ●	C	●	●	●	-	●	●	F	●
Type of delivery										
• Single components, not pre-assembled	5									
• Pre-assembled and tested	6									
System Expansion Card										
• 2 × System Expansion Card 100 PO			J							
• 2 × System Expansion Card 500 PO			L							
• 2 × System Expansion Card 1 000 PO			N							
• 2 × System Expansion Card 1 600 PO			P							
• 2 × System Expansion Card PO 2k+ (≥ 2 000)			Q							
• 2 × System Expansion Card 0 PO (empty)			R							
Sync modules and cables										
• 2 × 2 sync modules V8 XTR for distances up to 10 m and 2 × FO sync cable, 1 m				3						
Additive Industrial Ethernet interface modules										
• Without CP 443-1					0					
• 1 × 2 CP 443-1					3					
• 2 × 2 CP 443-1					4					
Racks										
• 1 × UR2-H XTR (2 × 9 slots), aluminum[1]							1			
• 2 × UR2 XTR (9 slots), aluminum[1]							3			
• 2 x CR3 XTR, 4 slots, aluminum[2]							7			
Power supply (without backup batteries)										
• 2 × PS 407, 4 A XTR for 120/230 V AC/DC[3]								A		
• 2 × PS 407, 10 A XTR for 120/230 V AC/DC, optional redundancy								C		
• 2 × 2 PS 407, 10 A XTR for 120/230 V AC/DC, redundant								E		
• 2 × PS 405, 4 A XTR for 24 V DC[3]								F		
• 2 × PS 405, 10 A XTR for 24 V DC, optional redundancy								H		
• 2 × 2 PS 405, 10 A XTR for 24 V DC, redundant								K		
Additive PROFIBUS DP interface modules										
• Without CP 443-5 Extended										0

1) Only in conjunction with 10 A power supplies
2) Only in conjunction with 4 A power supplies
3) Only in conjunction with CR3 rack

High-availability automation systems with CPU 410E

	Article No.									
AS 410HE (redundancy station) 2 × CPU 410E with PROFIBUS DP and PROFINET IO interface 4 MB work memory (2 MB each for program and data) with SIMATIC PCS 7 AS Runtime license for 100 POs and System Expansion Card PO 200M	**6ES7656-** ●	E	K	●	●	-	●	●	F	●
Type of delivery										
• Single components, not pre-assembled	5									
• Pre-assembled and tested	6									
Sync modules and cables										
• 2 × 2 sync modules[2] for distances up to 10 m and 2 × FO sync cable, 1 m				3						
• 2 × 2 sync modules for up to 10 km and 2 × FO sync cable, 1 m, for testing				4						
Additive Industrial Ethernet interface modules[1]										
• Without CP 443-1					0					
• 2 × 1 CP 443-1[2]					3					
• 2 × 2 CP 443-1[2]					4					

© Siemens AG 2024

Selection and ordering data (continued)

	Article No.									
Racks										
• 1 × UR2-H (2 × 9 slots), aluminum[1)2)]							1			
• 1 × UR2-H (2 × 9 slots), steel[1)]							2			
• 2 × UR2 (9 slots), aluminum[1)2)]							3			
• 2 × UR2 (9 slots), steel[1)]							4			
• 2 × CR3 (4 slots), aluminum[2)3)]							7			
Power supply (without backup batteries)										
• 2 × PS 407, 4 A for 120/230 V AC/DC[2)4)]								A		
• 2 × PS 407, 10 A for 120/230 V AC/DC								B		
• 2 × PS 407, 10 A for 120/230 V AC/DC, optional redundancy[2)]								C		
• 2 × 2 PS 407, 10 A for 120/230 V AC/DC, redundant[2)]								E		
• 2 × PS 405, 4 A for 24 V DC[2)4)]								F		
• 2 × PS 405, 10 A for 24 V DC								G		
• 2 × PS 405, 10 A for 24 V DC, optional redundancy[2)]								H		
• 2 × 2 PS 405, 10 A for 24 V DC, redundant[2)]								K		
Additive PROFIBUS DP interface modules[1)]										
• Without CP 443-5 Extended										0
• 2 × 1 CP 443-5 Extended[2)]										1
• 2 × 2 CP 443-5 Extended[2)]										2
• 2 × 3 CP 443-5 Extended[2)]										3
• 2 × 4 CP 443-5 Extended[2)]										4

1) In configurations with UR2/UR2-H racks, up to 5 CPs (Industrial Ethernet/PROFIBUS) can be configured with a single power supply per subsystem, or up to 3 CPs per subsystem with a redundant power supply.
2) Conformal coating
3) Only in conjunction with 4 A power supplies
4) Only in conjunction with CR3 rack

High-availability automation systems with CPU 410E for the expanded temperature range (XTR)

	Article No.									
AS 410HE (redundancy station)	6ES7656-									
2 × CPU 410E with PROFIBUS DP and PROFINET IO interface 4 MB work memory (2 MB each for program and data) with SIMATIC PCS 7 AS Runtime license for 100 POs and System Expansion Card PO 200M	●	E	K	●	●	-	●	●	F	●
Type of delivery										
• Single components, not pre-assembled	5									
• Pre-assembled and tested	6									
Sync modules and cables										
• 2 × 2 sync modules V8 XTR for distances up to 10 m and 2 × FO sync cable, 1 m				3						
Additive Industrial Ethernet interface modules										
• Without CP 443-1					0					
• 1 × 2 CP 443-1					3					
• 2 × 2 CP 443-1					4					
Racks										
• 1 × UR2-H XTR (2 × 9 slots), aluminum[1)]							1			
• 2 × UR2 XTR (9 slots), aluminum[1)]							3			
• 2 x CR3 XTR, 4 slots, aluminum[2)]							7			
Power supply (without backup batteries)										
• 2 × PS 407, 4 A XTR for 120/230 V AC/DC[3)]								A		
• 2 × PS 407, 10 A XTR for 120/230 V AC/DC, optional redundancy								C		
• 2 × 2 PS 407, 10 A XTR for 120/230 V AC/DC, redundant								E		
• 2 × PS 405, 4 A XTR for 24 V DC[3)]								F		
• 2 × PS 405, 10 A XTR for 24 V DC, optional redundancy								H		
• 2 × 2 PS 405, 10 A XTR for 24 V DC, redundant								K		

© Siemens AG 2024

Selection and ordering data (continued)

	Article No.
Additive PROFIBUS DP interface modules	
• Without CP 443-5 Extended	0

1) Only in conjunction with 10 A power supplies
2) Only in conjunction with 4 A power supplies
3) Only in conjunction with CR3 rack

Single components

Single components	
Single components of the high availability SIMATIC PCS 7 automation systems AS 410H	
CPU 410-5H Process Automation as spare part Conformal coating; for operating temperature up to 70 °C 32 MB work memory integrated (16 MB each for program and data); module occupies 2 slots	6ES7410-5HX08-0AB0
CPU 410-5H Process Automation 100 PO Bundle CPU bundle, consisting of CPU 410-5H Process Automation and PCS 7 System Expansion Card for 100 PO	6ES7654-5CJ00-0XF0
CPU 410-5H Process Automation 500 PO Bundle CPU bundle, consisting of CPU 410-5H Process Automation and PCS 7 System Expansion Card for 500 PO	6ES7654-5CL00-0XF0
CPU 410-5H Process Automation 1 000 PO Bundle CPU bundle, consisting of CPU 410-5H Process Automation and PCS 7 System Expansion Card for 1 000 PO	6ES7654-5CN00-0XF0
CPU 410-5H Process Automation 1 600 PO Bundle CPU bundle, consisting of CPU 410-5H Process Automation and PCS 7 System Expansion Card for 1 600 PO	6ES7654-5CP00-0XF0
CPU 410-5H Process Automation PO 2k+ Bundle CPU bundle, consisting of CPU 410-5H Process Automation and PCS 7 System Expansion Card for PO 2k+ (≥ 2 000)	6ES7654-5CQ00-0XF0
CPU 410 Expansion Pack For subsequent increase in performance of the CPU 410-5H process automation Language-neutral, without SIMATIC PCS 7 Software Media Package	
• Goods delivery License key on USB flash drive, Certificate of License	
- 100 PO, license for upgrading 1 CPU	6ES7653-2CA00-0XE0
- 500 PO, license for upgrading 1 CPU	6ES7653-2CC00-0XE0
• Online delivery License key download, online Certificate of License : Email address required!	
- 100 PO, license for upgrading 1 CPU	6ES7653-2CA00-0XK0
- 500 PO, license for upgrading 1 CPU	6ES7653-2CC00-0XK0

Single components	
Sync set For coupling two redundant CPUs; for distances up to	
• 10 m, consisting of 4 sync modules for up to 10 m and 2 FO sync cables, 1 m each	6ES7656-7XX30-0XE0
• 10 km, consisting of 4 sync modules for up to 10 km : please order fiber-optic sync cables (2 units) in the required length separately.	6ES7656-7XX40-0XE0
Sync module For coupling two redundant CPUs; 2 modules required for each CPU; for distances up to	
• 10 m	6ES7960-1AA06-0XA0
• 10 km	6ES7960-1AB06-0XA0
Sync module V8 XTR (Conformal coating; for operating temperature up to 70 °C) For coupling two redundant CPUs; 2 modules required for each CPU; for distances up to 10 m	6ES7960-1AA08-0XA0
Sync cable (fiber-optic connecting cable) For connecting two redundant CPUs, 2 cables required for each redundant automation system	
• 1 m	6ES7960-1AA04-5AA0
• 2 m	6ES7960-1AA04-5BA0
• 10 m	6ES7960-1AA04-5KA0
Other lengths	On request
PS 407 power supply module with battery compartment for 2 backup batteries, module occupies 2 slots	
• **4 A XTR** (conformal coating; for operating temperature up to 70 °C) 120/230 V AC/DC; 5 V DC/4 A, 24 V DC/0.5 A	6ES7407-0DA02-0AA1
• **10 A** 120/230 V AC/DC; 5 V DC/10 A, 24 V DC/1 A	6ES7407-0KA02-0AA0
• **10 A XTR, optional redundancy** (conformal coating; for operating temperature up to 70 °C) 120/230 V AC/DC; 5 V DC/10 A, 24 V DC/1 A	6ES7407-0KR02-0AA1
• **20 A** 120/230 V AC/DC; 5 V DC/20 A, 24 V DC/1 A	6ES7407-0RA02-0AA0

© Siemens AG 2024

Selection and ordering data (continued)

Single components	
PS 405 power supply module with battery compartment for 2 backup batteries, module occupies 2 slots	
• **4 A XTR** (conformal coating; for operating temperature up to 70 °C) 24/48/60 V DC; 5 V DC/4 A, 24 V DC/0.5 A	6ES7405-0DA02-0AA1
• **10 A** 24/48/60 V DC; 5 V DC/10 A, 24 V DC/1 A	6ES7405-0KA02-0AA0
• **10 A XTR, optional redundancy** (conformal coating; for operating temperature up to 70 °C) 24/48/60 V DC/; 5 V DC/10 A, 24 V DC/1 A	6ES7405-0KR02-0AA1
• **20 A** 24/48/60 V DC; 5 V DC/20 A, 24 V DC/1 A; with battery compartment for 2 backup batteries, module occupies 2 slots	6ES7405-0RA02-0AA0
Backup battery For PS 405/407, type AA, 3.6 V, 2.3 Ah	6ES7971-0BA00
XTR backup battery For PS 405/407, type AA, 3.6 V, 2.3 Ah; for operating temperatures up to 70 °C	6ES7971-0BA02
Aluminum rack	
• UR1, 18 slots	6ES7400-1TA11-0AA0
• UR2 XTR, 9 slots (conformal coating; for operating temperature up to 70 °C)	6ES7400-1JA11-0AA1
• UR2-H XTR, for divided central controllers; 2 × 9 slots (conformal coating; for operating temperature up to 70 °C)	6ES7400-2JA10-0AA1
• CR3 XTR, 4 slots (conformal coating; for operating temperature up to 70 °C)	6ES7401-1DA01-0AA1
Steel rack	
• UR1, 18 slots	6ES7400-1TA01-0AA0
• UR2, 9 slots	6ES7400-1JA01-0AA0
• UR2-H, for divided central controllers; 2 × 9 slots	6ES7400-2JA00-0AA0

Single components	
Single components for AS 410HE high availability automation systems	
CPU 410E Process Automation as spare part Conformal coating; for operating temperature up to 70 °C 4 MB work memory integrated (2 MB each for program and data); module occupies 2 slots	6ES7410-5HM08-0AB0
Runtime licenses for SIMATIC PCS 7 automation systems (can be added to existing licenses)	
SIMATIC PCS 7 AS Runtime license Language-neutral, floating license for 1 user Without SIMATIC PCS 7 Software Media Package	
• Goods delivery License key on USB flash drive, Certificate of License	
- 100 POs	6ES7653-2BA00-0XB5
- 1 000 POs	6ES7653-2BB00-0XB5
- 10 000 POs	6ES7653-2BC00-0XB5
• Online delivery License key download, online Certificate of License : Email address required!	
- 100 POs	6ES7653-2BA00-0XH5
- 1 000 POs	6ES7653-2BB00-0XH5
- 10 000 POs	6ES7653-2BC00-0XH5
Y-Link	
Y-Link For connecting devices with only 1 PROFIBUS DP interface to a redundant automation system	6ES7197-1LA12-0XA0

© Siemens AG 2024

Options

Y-Link

- Bus coupler for transition from a redundant PROFIBUS DP master system to a single-channel PROFIBUS DP master system
- For connection of devices with only one PROFIBUS DP interface to the redundant PROFIBUS DP master system

The Y-link comprises:

- 2 IM 153-2 High Feature Outdoor high feature interface modules
- One Y coupler including RS 485 repeater
- One BM IM/IM bus module for two IM 153-2 High Feature Outdoor modules
- One BM Y coupler bus module

Evaluation of the Y-Link diagnostics (and hence indirectly of the connected DP standard slaves) is supported by driver blocks.

© Siemens AG 2024

Overview

AS Single Station AS 410F

Safety-related automation systems are used for critical applications where a fault could endanger life or result in damage to the plant or the environment. These F/FH systems also referred to as "fail-safe automation systems" detect both faults in the process and their own internal faults in association with the safety-related F modules of the ET 200 distributed I/O systems or fail-safe transmitters connected directly via the fieldbus. They automatically transfer the plant to a safe state in the event of a fault.

Design

The PROFIsafe profile allows safety-related communication between the automation system (controller) and the process I/O via both PROFIBUS and PROFINET. The decision for choosing either PROFINET IO or the PROFIBUS DP/PA fieldbuses has a significant influence on the architecture of the safety-related system.

For information on the safety-related design variants with PROFIBUS DP/PA and PROFINET IO, refer to the section "Safety Integrated for Process Automation", "Introduction".

The safety-related SIMATIC PCS 7 automation systems are based either on the hardware of the AS 410S standard automation system (F systems) or the hardware of the AS 410H high availability automation system (FH systems), which have been supplemented with safety functions using SIMATIC S7 F systems.

In accordance with the design variant, they are categorized as:

- **AS Single Station AS 410F** with only one CPU (safety-related)
- **AS Redundancy Station AS 410FH** with two redundant CPUs (safety-related and high availability)

Availability can be flexibly increased with a redundant design for the power supply or the Industrial Ethernet communications module (for details, see the section "AS 410 modular systems" under "Flexible and scalable availability").

All AS 410F/FH systems are TÜV-certified and comply with the safety requirements up to SIL 3 according to IEC 61508.

In these systems with multitasking capability, several programs can be executed simultaneously in one CPU – basic process control (BPCS) applications or also safety-related applications. The programs are reaction-free, i.e. faults in BPCS applications have no effect on safety-related applications, and vice versa. Special tasks with very short response times can also be implemented.

The redundant FH systems operating according to the 1-out-of-2 principle consist of two subsystems of identical design. These are electrically isolated from each other to achieve optimum EMC, and are synchronized with each other via fiber-optic cables. In case of an error, there is a bumpless switchover from the active subsystem to the standby system. The two subsystems can be present in the same rack or separated by up to 10 km. The spatial separation provides additional security in the case of extreme influences in the environment of the active subsystem, e.g. resulting from a fire.

The redundancy of the FH systems is only used to increase the availability. It is not relevant to processing of the safety functions and the associated fault detection.

Individual configuration of AS bundles

Configuration of the safety-related automation systems as well as the article numbers can be defined by selecting pre-configured ordering units.

Typical combinations for the respective system can be selected using tables in the "Ordering data" section. These are divided into:

- AS Single Station AS 410F with one CPU
- AS Redundancy Station AS 410FH with two redundant CPUs, mounted on one common rack (UR2-H) or two separate racks (UR2)

The complete range for selection is available using two correspondingly structured online configurators in the Industry Mall:

- SIMATIC PCS 7 AS 410 Single Station configurator
- SIMATIC PCS 7 AS 410 Redundancy Station configurator

System Expansion Cards including a SIMATIC S7 F Systems Runtime License should be selected for safety-related AS 410 F/FH automation systems.

FO sync cables longer than 1 m must always be ordered separately (2 cables required in each case).

© Siemens AG 2024

Design (continued)

The components suitable for engineering the safety-related applications can be ordered in the section "Safety Integrated for Process Automation":

- SIMATIC S7 F Systems

  F programming tool with F block library for programming safety-related user programs on the engineering system

- SIMATIC S7 Safety Matrix

  Convenient safety lifecycle tool for configuration, operation and servicing

Subsequent increase in performance/ use of redundant PROFINET (R1)

If the performance limit defined by the ordered System Expansion Card is reached during configuration, commissioning or operation, a subsequent increase in performance is possible by using an appropriate number of CPU 410 Expansion Packs 100 POs/500 POs. Hardware modifications are not necessary.

Aside from increasing performance, the redundancy functions of PROFINET can also be expanded. If a redundant PROFINET (R1) is to be used in place of PROFINET system redundancy (S2), this function can be expanded with the "CPU 410 Expansion Pack PN Red".

I/O connection via PROFIBUS DP

The distributed process I/O can be integrated into a PROFIBUS DP segment either directly or via a lower-level PROFIBUS PA fieldbus. Several PROFIBUS DP segments with distributed process I/Os can be operated on an AS 410F/FH automation system.

A PROFIBUS DP interface is already integrated in each CPU 410-5H Process Automation. Using the online configurator in the Industry Mall or in the selection and ordering data, up to four additional PROFIBUS DP interfaces can be configured with additive CP 443-5 PROFIBUS DP interface modules (conformal coating) for each AS 410F as well as for each subsystem of the AS 410FH.

Connection of the process I/Os to two redundant PROFIBUS DP lines of an FH system (AS Redundancy Station) is carried out as described in the section "High-availability automation systems".

The FOUNDATION Fieldbus (FF) H1 and the FF devices are not supported by Safety Integrated for Process Automation.

I/O connection via PROFINET IO

Safety-related AS 410F/FH automation systems can be connected via PROFINET IO with remote I/O stations, for example, ET 200M or ET 200SP remote I/O stations. Only the two PROFINET interfaces (2-port switches) integrated in the CPU can be used for this on the automation system. You can find more information in the section "Safety Integrated for Process Automation", "Introduction".

Communication over the plant bus

If the PROFINET interfaces integrated in the CPU of the safety-related automation systems are not used for PROFINET IO, they are then available for connection to the Industrial Ethernet plant bus. Otherwise, the AS 410F and the two subsystems of the AS 410FH can be connected to the plant bus via one CP 443-1 (conformal coating) communications module each.

The plant bus can be implemented in the form of a ring structure, which can also be configured with redundant architecture if the availability requirements are high. When there are two redundant rings, it makes sense to configure two IE interface/communications modules per AS (AS 410F) or AS subsystem (AS 410FH) and to distribute their connections over the two rings (4-way connection). Double faults such as failure of the switch on ring 1 with simultaneous interruption of the bus cable on ring 2 can thus be tolerated.

Runtime licenses

Safety-related automation systems come furnished with the SIMATIC PCS 7 AS Runtime license for 100 process objects (PO) and the

Design (continued)

SIMATIC S7 F Systems RT license. The 100 POs of the SIMATIC PCS 7 AS Runtime license can be expanded by additional Runtime licenses for 100, 1 000 or 10 000 POs. The process objects of additional Runtime licenses can be added to process objects which already exist. The number and type (e.g. 100 or 1 000) of additional Runtime licenses is irrelevant.

© Siemens AG 2024

Selection and ordering data

Safety-related automation systems with CPU 410-5H

	Article No.									
AS 410F (single station) CPU 410-5H with PROFIBUS DP and PROFINET IO interface 32 MB work memory (16 MB each for program and data) with SIMATIC PCS 7 AS Runtime license for 100 POs	**6ES7654-** ●	C	●	0	●	-	●	●	F	●
Type of delivery										
• Single components, not pre-assembled	5									
• Pre-assembled and tested	6									
System Expansion Card										
• System Expansion Card 100 POs incl. SIMATIC S7 F systems Runtime license			A							
• System Expansion Card 500 POs incl. SIMATIC S7 F systems Runtime license			C							
• System Expansion Card 1 000 PO incl. SIMATIC S7 F systems Runtime license			E							
• System Expansion Card 1 600 PO incl. SIMATIC S7 F systems Runtime license			F							
• System Expansion Card PO 2k+ (≥ 2 000) incl. SIMATIC S7 F systems Runtime license			G							
• System Expansion Card 0 PO (empty) incl. SIMATIC S7 F systems Runtime license			H							
Additive Industrial Ethernet interface modules[1]										
• Without CP 443-1					0					
• 1 × CP 443-1[2]					3					
• 2 × CP 443-1[2]					4					
Racks										
• UR2 (9 slots), aluminum[1][2]							3			
• UR2 (9 slots), steel[1]							4			
• UR1 (18 slots), aluminum							5			
• UR1 (18 slots), steel							6			
• CR3 (4 slots), aluminum[2][3]							7			
Power supply (without backup batteries)										
• 1 × PS 407, 4 A for 120/230 V AC/DC[2][4]								A		
• 1 × PS 407, 10 A for 120/230 V AC/DC								B		
• 1 × PS 407, 10 A for 120/230 V AC/DC, optional redundancy[2]								C		
• 1 × PS 407, 20 A for 120/230 V AC/DC								D		
• 2 × PS 407, 10 A for 120/230 V AC/DC, redundant[2]								E		
• 1 × PS 405, 4 A for 24 V DC[2][4]								F		
• 1 × PS 405, 10 A for 24 V DC								G		
• 1 × PS 405, 10 A for 24 V DC, optional redundancy[2]								H		
• 1 × PS 405, 20 A for 24 V DC								J		
• 2 × PS 405, 10 A for 24 V DC, redundant[2]								K		
Additive PROFIBUS DP interface modules[1]										
• Without CP 443-5 Extended										0
• 1 × CP 443-5 Extended[2]										1
• 2 × CP 443-5 Extended[2]										2
• 3 × CP 443-5 Extended[2]										3
• 4 × CP 443-5 Extended[2]										4

1) Up to 5 CPs (Industrial Ethernet/PROFIBUS) can be plugged into the UR2 rack with a single power supply, or up to 3 CPs with a redundant power supply.
2) Conformal coating
3) Only in conjunction with 4 A power supplies
4) Only in conjunction with CR3 rack

	Article No.									
AS 410FH (redundancy station) 2 × CPU 410-5H with PROFIBUS DP and PROFINET IO interface 32 MB work memory (16 MB each for program and data) with SIMATIC PCS 7 AS Runtime license for 100 POs	**6ES7656-** ●	C	●	●	●	-	●	●	F	●
Type of delivery										
• Single components, not pre-assembled	5									
• Pre-assembled and tested	6									

© Siemens AG 2024

Selection and ordering data (continued)

	Article No.									
System Expansion Card										
• 2 × System Expansion Card 100 PO incl. SIMATIC S7 F systems Runtime license			A							
• 2 × System Expansion Card 500 PO incl. SIMATIC S7 F systems Runtime license			C							
• 2 × System Expansion Card 1 000 PO incl. SIMATIC S7 F systems Runtime license			E							
• 2 × System Expansion Card 1 600 PO incl. SIMATIC S7 F systems Runtime license			F							
• 2 × System Expansion Card PO 2k+ (≥ 2 000) incl. SIMATIC S7 F systems Runtime license			G							
• 2 × System Expansion Card 0 PO (empty) incl. SIMATIC S7 F systems Runtime license			H							
Sync modules and cables										
• 2 × 2 sync modules[2] for distances up to 10 m and 2 × FO sync cable, 1 m				3						
• 2 × 2 sync modules for up to 10 km and 2 × FO sync cable, 1 m, for testing				4						
Additive Industrial Ethernet interface modules[1]										
• Without CP 443-1					0					
• 2 × 1 CP 443-1[2]					3					
• 2 × 2 CP 443-1[2]					4					
Racks										
• 1 × UR2-H (2 × 9 slots), aluminum[1][2]							1			
• 1 × UR2-H (2 × 9 slots), steel[1]							2			
• 2 × UR2 (9 slots), aluminum[1][2]							3			
• 2 × UR2 (9 slots), steel[1]							4			
• 2 x CR3 (4 slots), aluminum[2][3]							7			
Power supply (without backup batteries)										
• 2 × PS 407, 4 A for 120/230 V AC/DC[2][4]								A		
• 2 × PS 407, 10 A for 120/230 V AC/DC								B		
• 2 × PS 407, 10 A for 120/230 V AC/DC, optional redundancy[2]								C		
• 2 × PS 407, 20 A for 120/230 V AC/DC								D		
• 2 × 2 PS 407, 10 A for 120/230 V AC/DC, redundant[2]								E		
• 2 × PS 405, 4 A for 24 V DC[2][4]								F		
• 2 × PS 405, 10 A for 24 V DC								G		
• 2 × PS 405, 10 A for 24 V DC, optional redundancy[2]								H		
• 2 × PS 405, 20 A for 24 V DC								J		
• 2 × 2 PS 405, 10 A for 24 V DC, redundant[2]								K		
Additive PROFIBUS DP interface modules[1]										
• Without CP 443-5 Extended										0
• 2 × 1 CP 443-5 Extended[2]										1
• 2 × 2 CP 443-5 Extended[2]										2
• 2 × 3 CP 443-5 Extended[2]										3
• 2 × 4 CP 443-5 Extended[2]										4

1) In configurations with UR2/UR2-H racks, up to 5 CPs (Industrial Ethernet/PROFIBUS) can be configured with a single power supply per subsystem, or up to 3 CPs per subsystem with a redundant power supply.
2) Conformal coating
3) Only in conjunction with 4 A power supplies
4) Only in conjunction with CR3 rack

Safety-related automation systems with CPU 410-5H for the expanded temperature range (XTR)

	Article No.									
AS 410F (single station) CPU 410-5H with PROFIBUS DP and PROFINET IO interface 32 MB work memory (16 MB each for program and data) with SIMATIC PCS 7 AS Runtime license for 100 POs	6ES7654- ●	C	●	0	●	-	●	●	F	●
Type of delivery										
• Single components, not pre-assembled	5									
• Pre-assembled and tested	6									
System Expansion Card										
• System Expansion Card 100 POs incl. SIMATIC S7 F systems Runtime license			A							
• System Expansion Card 500 POs incl. SIMATIC S7 F systems Runtime license			C							

© Siemens AG 2024

Selection and ordering data (continued)

	Article No.									
• System Expansion Card 1 000 PO incl. SIMATIC S7 F systems Runtime license			E							
• System Expansion Card 1 600 PO incl. SIMATIC S7 F systems Runtime license			F							
• System Expansion Card PO 2k+ (≥ 2 000) incl. SIMATIC S7 F systems Runtime license			G							
• System Expansion Card 0 PO (empty) incl. SIMATIC S7 F systems Runtime license			H							
Additive Industrial Ethernet interface modules										
• Without CP 443-1					0					
• 1 × CP 443-1					3					
• 2 × CP 443-1					4					
Racks										
• UR2 XTR (9 slots), aluminum[1]							3			
• CR3 XTR, 4 slots, aluminum[2]							7			
Power supply (without backup batteries)										
• 1 × PS 407, 4 A XTR for 120/230 V AC/DC[3]								A		
• 1 × PS 407, 10 A XTR for 120/230 V AC/DC, optional redundancy								C		
• 2 × PS 407, 10 A XTR for 120/230 V AC/DC, redundant								E		
• 1 × PS 405, 4 A XTR for 24 V DC[3]								F		
• 1 × PS 405, 10 A XTR for 24 V DC, optional redundancy								H		
• 2 × PS 405, 10 A XTR for 24 V DC, redundant								K		
Additive PROFIBUS DP interface modules										
• Without CP 443-5 Extended										0

1) Only in conjunction with 10 A power supplies
2) Only in conjunction with 4 A power supplies
3) Only in conjunction with CR3 rack

	Article No.									
AS 410FH (redundancy station)	6ES7656-									
2 × CPU 410-5H with PROFIBUS DP and PROFINET IO interface 32 MB work memory (16 MB each for program and data) with SIMATIC PCS 7 AS Runtime license for 100 POs	●	C	●	●	●	-	●	●	F	●
Type of delivery										
• Single components, not pre-assembled	5									
• Pre-assembled and tested	6									
System Expansion Card										
• 2 × System Expansion Card 100 PO incl. SIMATIC S7 F systems Runtime license			A							
• 2 × System Expansion Card 500 PO incl. SIMATIC S7 F systems Runtime license			C							
• 2 × System Expansion Card 1 000 PO incl. SIMATIC S7 F systems Runtime license			E							
• 2 × System Expansion Card 1 600 PO incl. SIMATIC S7 F systems Runtime license			F							
• 2 × System Expansion Card PO 2k+ (≥ 2 000) incl. SIMATIC S7 F systems Runtime license			G							
• 2 × System Expansion Card 0 PO (empty) incl. SIMATIC S7 F systems Runtime license			H							
Sync modules and cables										
• 2 × 2 sync modules V8 XTR for distances up to 10 m and 2 × FO sync cable, 1 m				3						
Additive Industrial Ethernet interface modules										
• Without CP 443-1					0					
• 1 × 2 CP 443-1					3					
• 2 × 2 CP 443-1					4					
Racks										
• 1 × UR2-H XTR (2 × 9 slots), aluminum[1]							1			
• 2 × UR2 XTR (9 slots), aluminum[1]							3			
• 2 × CR3 XTR, 4 slots, aluminum[2]							7			
Power supply (without backup batteries)										
• 2 × PS 407, 4 A XTR for 120/230 V AC/DC[3]								A		
• 2 × PS 407, 10 A XTR for 120/230 V AC/DC, optional redundancy								C		
• 2 × 2 PS 407, 10 A XTR for 120/230 V AC/DC, redundant								E		
• 2 × PS 405, 4 A XTR for 24 V DC[3]								F		
• 2 × PS 405, 10 A XTR for 24 V DC, optional redundancy								H		

© Siemens AG 2024

Selection and ordering data (continued)

	Article No.									
• 2 × 2 PS 405, 10 A XTR for 24 V DC, redundant								K		
Additive PROFIBUS DP interface modules										
• Without CP 443-5 Extended										0

1) Only in conjunction with 10 A power supplies
2) Only in conjunction with 4 A power supplies
3) Only in conjunction with CR3 rack

Safety-related automation systems with CPU 410E

	Article No.									
AS 410FE (single station) CPU 410E with PROFIBUS DP and PROFINET IO interface 4 MB work memory (2 MB each for program and data) with SIMATIC PCS 7 AS Runtime license for 100 POs and System Expansion Card PO 200M	6ES7654- ●	E	B	0	●	-	●	●	F	●
Type of delivery										
• Single components, not pre-assembled	5									
• Pre-assembled and tested	6									
Additive Industrial Ethernet interface modules[1]										
• Without CP 443-1					0					
• 1 × CP 443-1[2]					3					
• 2 × CP 443-1[2]					4					
Racks										
• UR2 (9 slots), aluminum[1)2)]							3			
• UR2 (9 slots), steel[1]							4			
• CR3 (4 slots), aluminum[2)3)]							7			
Power supply (without backup batteries)										
• 1 × PS 407, 4 A for 120/230 V AC/DC[2)4)]								A		
• 1 × PS 407, 10 A for 120/230 V AC/DC								B		
• 1 × PS 407, 10 A for 120/230 V AC/DC, optional redundancy[2]								C		
• 2 × PS 407, 10 A for 120/230 V AC/DC, redundant[2]								E		
• 1 × PS 405, 4 A for 24 V DC[2)4)]								F		
• 1 × PS 405, 10 A for 24 V DC								G		
• 1 × PS 405, 10 A for 24 V DC, optional redundancy[2]								H		
• 2 × PS 405, 10 A for 24 V DC, redundant[2]								K		
Additive PROFIBUS DP interface modules[1]										
• Without CP 443-5 Extended										0
• 1 × CP 443-5 Extended[2]										1
• 2 × CP 443-5 Extended[2]										2
• 3 × CP 443-5 Extended[2]										3
• 4 × CP 443-5 Extended[2]										4

1) Up to 5 CPs (Industrial Ethernet/PROFIBUS) can be plugged into the UR2 rack with a single power supply, or up to 3 CPs with a redundant power supply.
2) Conformal coating
3) Only in conjunction with 4 A power supplies
4) Only in conjunction with CR3 rack

	Article No.									
AS 410FHE (redundancy station) 2 × CPU 410E with PROFIBUS DP and PROFINET IO interface 4 MB work memory (2 MB each for program and data) with SIMATIC PCS 7 AS Runtime license for 100 POs and System Expansion Card PO 200M	6ES7656- ●	E	B	●	●	-	●	●	F	●
Type of delivery										
• Single components, not pre-assembled	5									
• Pre-assembled and tested	6									
Sync modules and cables										
• 2 × 2 sync modules[2] for distances up to 10 m and 2 × FO sync cable, 1 m				3						
• 2 × 2 sync modules for up to 10 km and 2 × FO sync cable, 1 m, for testing				4						

© Siemens AG 2024

Selection and ordering data (continued)

	Article No.									
Additive Industrial Ethernet interface modules[1]										
• Without CP 443-1					0					
• 2 × 1 CP 443-1[2]					3					
• 2 × 2 CP 443-1[2]					4					
Racks										
• 1 × UR2-H (2 × 9 slots), aluminum[1][2]							1			
• 1 × UR2-H (2 × 9 slots), steel[1]							2			
• 2 × UR2 (9 slots), aluminum[1][2]							3			
• 2 × UR2 (9 slots), steel[1]							4			
• 2 x CR3 (4 slots), aluminum[2][3]							7			
Power supply (without backup batteries)										
• 2 × PS 407, 4 A for 120/230 V AC/DC[2][4]								A		
• 2 × PS 407, 10 A for 120/230 V AC/DC								B		
• 2 × PS 407, 10 A for 120/230 V AC/DC, optional redundancy[2]								C		
• 2 × PS 407, 20 A for 120/230 V AC/DC								D		
• 2 × 2 PS 407, 10 A for 120/230 V AC/DC, redundant[2]								E		
• 2 × PS 405, 4 A for 24 V DC[2][4]								F		
• 2 × PS 405, 10 A for 24 V DC								G		
• 2 × PS 405, 10 A for 24 V DC, optional redundancy[2]								H		
• 2 × PS 405, 20 A for 24 V DC								J		
• 2 × 2 PS 405, 10 A for 24 V DC, redundant[2]								K		
Additive PROFIBUS DP interface modules[1]										
• Without CP 443-5 Extended										0
• 2 × 1 CP 443-5 Extended[2]										1
• 2 × 2 CP 443-5 Extended[2]										2
• 2 × 3 CP 443-5 Extended[2]										3
• 2 × 4 CP 443-5 Extended[2]										4

1) In configurations with UR2/UR2-H racks, up to 5 CPs (Industrial Ethernet/PROFIBUS) can be configured with a single power supply per subsystem, or up to 3 CPs per subsystem with a redundant power supply.
2) Conformal coating
3) Only in conjunction with 4 A power supplies
4) Only in conjunction with CR3 rack

Safety-related automation systems with CPU 410E for the expanded temperature range (XTR)

	Article No.									
AS 410FE (single station) CPU 410E with PROFIBUS DP and PROFINET IO interface 4 MB work memory (2 MB each for program and data) with SIMATIC PCS 7 AS Runtime license for 100 POs and System Expansion Card PO 200M	6ES7654- ●	E	B	0	●	-	●	●	F	●
Type of delivery										
• Single components, not pre-assembled	5									
• Pre-assembled and tested	6									
Additive Industrial Ethernet interface modules										
• Without CP 443-1					0					
• 1 × CP 443-1					3					
• 2 × CP 443-1					4					
Racks										
• UR2 XTR (9 slots), aluminum[1]							3			
• CR3 XTR, 4 slots, aluminum[2]							7			
Power supply (without backup batteries)										
• 1 × PS 407, 4 A XTR for 120/230 V AC/DC[3]								A		
• 1 × PS 407, 10 A XTR for 120/230 V AC/DC, optional redundancy								C		
• 2 × PS 407, 10 A XTR for 120/230 V AC/DC, redundant								E		
• 1 × PS 405, 4 A XTR for 24 V DC[3]								F		
• 1 × PS 405, 10 A XTR for 24 V DC, optional redundancy								H		

© Siemens AG 2024

Selection and ordering data (continued)

	Article No.									
• 2 × PS 405, 10 A XTR for 24 V DC, redundant								K		
Additive PROFIBUS DP interface modules										
• Without CP 443-5 Extended										0

1) Only in conjunction with 10 A power supplies
2) Only in conjunction with 4 A power supplies
3) Only in conjunction with CR3 rack

	Article No.									
AS 410FHE (redundancy station) 2 × CPU 410E with PROFIBUS DP and PROFINET IO interface 4 MB work memory (2 MB each for program and data) with SIMATIC PCS 7 AS Runtime license for 100 POs and System Expansion Card PO 200M	6ES7656- ●	E	B	●	●	-	●	●	F	●
Type of delivery										
• Single components, not pre-assembled	5									
• Pre-assembled and tested	6									
Sync modules and cables										
• 2 × 2 sync modules V8 XTR for distances up to 10 m and 2 × FO sync cable, 1 m				3						
Additive Industrial Ethernet interface modules										
• Without CP 443-1					0					
• 1 × 2 CP 443-1					3					
• 2 × 2 CP 443-1					4					
Racks										
• 1 × UR2-H XTR (2 × 9 slots), aluminum[1]							1			
• 2 × UR2 XTR (9 slots), aluminum[1]							3			
• 2 × CR3 XTR, 4 slots, aluminum[2]							7			
Power supply (without backup batteries)										
• 2 × PS 407, 4 A XTR for 120/230 V AC/DC[3]								A		
• 2 × PS 407, 10 A XTR for 120/230 V AC/DC, optional redundancy								C		
• 2 × 2 PS 407, 10 A XTR for 120/230 V AC/DC, redundant								E		
• 2 × PS 405, 4 A XTR for 24 V DC[3]								F		
• 2 × PS 405, 10 A XTR for 24 V DC, optional redundancy								H		
• 2 × 2 PS 405, 10 A XTR for 24 V DC, redundant								K		
Additive PROFIBUS DP interface modules										
• Without CP 443-5 Extended										0

1) Only in conjunction with 10 A power supplies
2) Only in conjunction with 4 A power supplies
3) Only in conjunction with CR3 rack

Single components

Single components	
Single components of the safety-related SIMATIC PCS 7 AS 410F and AS 410FH automation systems	
SIMATIC S7 F Systems RT License For processing safety-related user programs, for one AS 410F/FH system each	6ES7833-1CC00-6YX0
CPU 410-5H Process Automation as spare part Conformal coating; for operating temperature up to 70 °C 32 MB work memory integrated (16 MB each for program and data); module occupies 2 slots	6ES7410-5HX08-0AB0
CPU 410-5H Process Automation 100 PO Bundle CPU bundle, consisting of CPU 410-5H Process Automation and PCS 7 System Expansion Card for 100 PO	6ES7654-5CJ00-0XF0

Single components	
CPU 410-5H Process Automation 500 PO Bundle CPU bundle, consisting of CPU 410-5H Process Automation and PCS 7 System Expansion Card for 500 PO	6ES7654-5CL00-0XF0
CPU 410-5H Process Automation 1 000 PO Bundle CPU bundle, consisting of CPU 410-5H Process Automation and PCS 7 System Expansion Card for 1 000 PO	6ES7654-5CN00-0XF0
CPU 410-5H Process Automation 1 600 PO Bundle CPU bundle, consisting of CPU 410-5H Process Automation and PCS 7 System Expansion Card for 1 600 PO	6ES7654-5CP00-0XF0
CPU 410-5H Process Automation PO 2k+ Bundle CPU bundle, consisting of CPU 410-5H Process Automation and PCS 7 System Expansion Card for PO 2k+ (≥ 2 000)	6ES7654-5CQ00-0XF0

© Siemens AG 2024

Selection and ordering data (continued)

Single components	
CPU 410 Expansion Pack For subsequent increase in performance of the CPU 410-5H process automation Language-neutral, without SIMATIC PCS 7 Software Media Package	
• Goods delivery License key on USB flash drive, Certificate of License	
- 100 PO, license for upgrading 1 CPU	6ES7653-2CA00-0XE0
- 500 PO, license for upgrading 1 CPU	6ES7653-2CC00-0XE0
• Online delivery License key download, online Certificate of License : Email address required!	
- 100 PO, license for upgrading 1 CPU	6ES7653-2CA00-0XK0
- 500 PO, license for upgrading 1 CPU	6ES7653-2CC00-0XK0
Sync set For coupling two redundant CPUs; for distances up to	
• 10 m, consisting of 4 sync modules for up to 10 m and 2 FO sync cables, 1 m each	6ES7656-7XX30-0XE0
• 10 km, consisting of 4 sync modules for up to 10 km : please order fiber-optic sync cables (2 units) in the required length separately.	6ES7656-7XX40-0XE0
Sync module For coupling two redundant CPUs; 2 modules required for each CPU, for distances up to	
• 10 m	6ES7960-1AA06-0XA0
• 10 km	6ES7960-1AB06-0XA0
Sync module V8 XTR (Conformal coating; for operating temperature up to 70 °C) For coupling two redundant CPUs; 2 modules required for each CPU; for distances up to 10 m	6ES7960-1AA08-0XA0
Sync cable (fiber-optic connecting cable) For connecting two redundant CPUs, 2 cables required for each redundant automation system	
• 1 m	6ES7960-1AA04-5AA0
• 2 m	6ES7960-1AA04-5BA0
• 10 m	6ES7960-1AA04-5KA0
Other lengths	On request
PS 407 power supply module with battery compartment for 2 backup batteries, module occupies 2 slots	
• **4 A XTR** (conformal coating; for operating temperature up to 70 °C) 120/230 V AC/DC; 5 V DC/4 A, 24 V DC/0.5 A	6ES7407-0DA02-0AA1
• **10 A** 120/230 V AC/DC; 5 V DC/10 A, 24 V DC/1 A	6ES7407-0KA02-0AA0

Single components	
• **10 A XTR, optional redundancy** (conformal coating; for operating temperature up to 70 °C) 120/230 V AC/DC; 5 V DC/10 A, 24 V DC/1 A	6ES7407-0KR02-0AA1
• **20 A** 120/230 V AC/DC; 5 V DC/20 A, 24 V DC/1 A	6ES7407-0RA02-0AA0
PS 405 power supply module with battery compartment for 2 backup batteries, module occupies 2 slots	
• **4 A XTR** (conformal coating; for operating temperature up to 70 °C) 24/48/60 V DC; 5 V DC/4 A, 24 V DC/0.5 A	6ES7405-0DA02-0AA1
• **10 A** 24/48/60 V DC; 5 V DC/10 A, 24 V DC/1 A	6ES7405-0KA02-0AA0
• **10 A XTR, optional redundancy** (conformal coating; for operating temperature up to 70 °C) 24/48/60 V DC; 5 V DC/10 A, 24 V DC/1 A	6ES7405-0KR02-0AA1
• **20 A** 24/48/60 V DC; 5 V DC/20 A, 24 V DC/1 A; with battery compartment for 2 backup batteries, module occupies 2 slots	6ES7405-0RA02-0AA0
Backup battery For PS 405/407, type AA, 3.6 V, 2.3 Ah	6ES7971-0BA00
XTR backup battery For PS 405/407, type AA, 3.6 V, 2.3 Ah; for operating temperatures up to 70 °C	6ES7971-0BA02
Aluminum rack	
• UR1, 18 slots	6ES7400-1TA11-0AA0
• UR2 XTR, 9 slots (conformal coating; for operating temperature up to 70 °C)	6ES7400-1JA11-0AA1
• UR2-H XTR, for divided central controllers; 2 × 9 slots (conformal coating; for operating temperature up to 70 °C)	6ES7400-2JA10-0AA1
• CR3 XTR, 4 slots (conformal coating; for operating temperature up to 70 °C)	6ES7401-1DA01-0AA1
Steel rack	
• UR1, 18 slots	6ES7400-1TA01-0AA0
• UR2, 9 slots	6ES7400-1JA01-0AA0
• UR2-H, for divided central controllers; 2 × 9 slots	6ES7400-2JA00-0AA0
Single components for safety-related AS 410FE automation systems	
CPU 410E Process Automation as spare part Conformal coating; for operating temperature up to 70 °C 4 MB work memory integrated (2 MB each for program and data); module occupies 2 slots	6ES7410-5HM08-0AB0

© Siemens AG 2024

Selection and ordering data (continued)

Single components	
Runtime licenses for SIMATIC PCS 7 automation systems (can be added to existing licenses)	
SIMATIC PCS 7 AS Runtime license Language-neutral, floating license for 1 user Without SIMATIC PCS 7 Software Media Package	
• Goods delivery License key on USB flash drive, Certificate of License	
- 100 POs	**6ES7653-2BA00-0XB5**
- 1 000 POs	**6ES7653-2BB00-0XB5**
- 10 000 POs	**6ES7653-2BC00-0XB5**

Single components	
• Online delivery License key download, online Certificate of License : Email address required!	
- 100 POs	**6ES7653-2BA00-0XH5**
- 1 000 POs	**6ES7653-2BB00-0XH5**
- 10 000 POs	**6ES7653-2BC00-0XH5**
AS 410F/FH Engineering See "Safety Integrated for Process Automation", SIMATIC S7 F systems	
Y-Link	
Y-Link For connecting devices with only one PROFIBUS DP interface to a redundant automation system	**6ES7197-1LA12-0XA0**

© Siemens AG 2024

Overview

AS 416-2 automation system

With the S7-400 automation systems, which are scalable via different types of CPU, you have an alternative to AS 410 automation systems. The systems that can be used in plants with SIMATIC PCS 7 V7/V8 can be classified as follows:

- Standard automation systems
- High availability automation systems
- Safety-related automation systems

Standard automation systems

The AS 414-3, AS 414-3IE, AS 416-2, AS 416-3, AS 416-3IE and AS 417-4 standard automation systems are extremely robust and feature high processing and communication performance.

The AS 414-3 and AS 414-3IE are tailored for smaller-scale applications with smaller quantity structures. This allows for a low-cost starter solution with a modular and scalable system based on the S7-400 controller range. Larger quantity frameworks can be implemented with the AS 416-2, AS416-3/416-3IE and AS 417-4 automation systems. These systems are preferred for medium and large-sized plants.

High availability automation systems

The aim in using high availability automation systems is to minimize the risk of a production outage. In accordance with their basic design, these systems are categorized as:

- AS Single Stations: AS 412-5-1H, AS 414-5-1H, AS 416-5-1H, and AS 417-5-1H with only one CPU, e.g. for the following applications:
  - Subsequent expansion to a redundant system
  - Redundant configuration on UR1 racks, comprising 2 single stations, 4 sync modules, and 2 FO sync cables
- AS Redundancy Stations: AS 412-5-2H, AS 414-5-2H, AS 416-5-2H and AS 417-5-2H with two redundant CPUs, mounted on one common rack (UR2-H) or two separate racks (UR2)

Safety-related automation systems

Safety-related automation systems (F/FH systems) are available for safety-relevant applications in which an incident can result in danger to persons, plant damage or environmental pollution. They are based on the hardware of the high availability automation systems, which is expanded by safety functions with SIMATIC S7 F systems.

In accordance with the design variant, they are categorized as:

Overview (continued)

- **AS Single Stations**
  AS 412F, AS 414F, AS 416F, and AS 417F with only one CPU (safety-related)
- **AS Redundancy Stations**
  AS 412FH, AS 414FH, AS 416FH, and AS 417FH with two redundant CPUs (safety-related and high availability)

The safety-related F/FH systems collaborate with safety-related F modules of the ET 200 distributed I/O systems or fail-safe transmitters connected directly via the fieldbus to detect not only faults in the process, but also their own, internal faults. They automatically transfer the plant to a safe state in the event of a fault. The redundancy of the FH systems is only used to increase the availability. It is not relevant to processing of the safety functions and the associated fault detection.

All F/FH systems are TÜV-certified and comply with the safety requirements up to SIL 3 according to IEC 61508.

© Siemens AG 2024

Design

Racks

Automation systems based on only one CPU (AS Single Station) can be mounted on a UR1 rack (18 slots) or UR2 rack (9 slots).

The automation systems (AS Redundancy Station) consisting of two electrically isolated redundant subsystems can be mounted on a UR2-H compact rack with divided backplane bus or on two separate racks (UR1 or UR2). The design with two racks allows physical separation of the redundant subsystems, e.g. by a fireproof partition and over a distance of up to 10 km. As a result of the galvanic isolation, the system is resistant to EMC interference.

Redundant power supply

If you have two separate power supply networks for your system, you can increase the availability of the automation systems with redundant power supplies (2 power supplies for one AS Single Station or 1 or 2 power supplies for each subsystem of an AS Redundancy Station).

Communication via the Industrial Ethernet (IE) plant bus

Each standard automation system is connected to the Industrial Ethernet plant bus by means of a CP 443-1 communications module.

If the PN/IE interfaces integrated in the CPUs of the high availability and safety-related automation systems are not used for PROFINET IO, they can then also be used for the connection to the Industrial Ethernet plant bus. Otherwise, the 1H/F-Systems (AS Single Station) and the two subsystems of the 2H/FH systems (AS Redundancy Station) can be connected to the plant bus via one CP 443-1 communications module each.

I/O connection via PROFIBUS DP

The distributed process I/O can be integrated into a PROFIBUS DP segment either directly or via a lower-level fieldbus (PROFIBUS PA or FOUNDATION Fieldbus H1).

Several PROFIBUS DP segments with distributed process I/O can be operated on a standard automation system, an 1H/F-system (AS Single Station), or a 2H/FH-system (AS Redundancy Station). The following table provides an overview of the number and type of configurable PROFIBUS DP interfaces.

AS type	PROFIBUS interfaces							
	1	2	3	4	5	6	7	8
AS 412-5-1H/AS 412F	MPI/DP	DP	CP	CP	CP	CP		
AS 412-5-2H/AS 412FH	MPI/DP	DP	CP	CP	CP	CP		
AS 414-5-1H/AS 414F	MPI/DP	DP	CP	CP	CP	CP		
AS 414-5-2H/AS 414FH	MPI/DP	DP	CP	CP	CP	CP		
AS 416-5-1H/AS 416F	MPI/DP	DP	CP	CP	CP	CP		
AS 416-5-2H/AS 416FH	MPI/DP	DP	CP	CP	CP	CP		
AS 417-5-1H/AS 417F	MPI/DP	DP	CP	CP	CP	CP		
AS 417-5-2H/AS 417FH	MPI/DP	DP	CP	CP	CP	CP		
AS 416-2	MPI/DP	DP	CP	CP	CP	CP		
AS 414-3IE	MPI/DP	IF	CP	CP	CP	CP		
AS 416-3IE	MPI/DP	IF	CP	CP	CP	CP		
AS 414-3	MPI/DP	DP	IF	CP	CP	CP	CP	
AS 416-3	MPI/DP	DP	IF	CP	CP	CP	CP	
AS 417-4	MPI/DP	DP	IF	IF	CP	CP	CP	CP

Overview of number and type of configurable PROFIBUS interfaces
MPI/DP = Integrated MPI/DP interface (for up to 32 PROFIBUS DP stations)
DP = Integrated PROFIBUS DP interface
IF = Optional PROFIBUS DP interface module
CP = Additive CP 443-5 Extended PROFIBUS DP interface module

I/O connection via PROFINET (PN)

Standard automation systems, high availability and safety-oriented automation systems (AS Single Stations and AS Redundancy Stations) can be networked simply and effectively with ET 200M remote I/O stations over PROFINET IO. If a PN/IE interface is integrated in the CPU of the automation system (AS 414-3IE, AS 416-3IE, and all H/F/FH systems), then it is to be used for connecting ET 200M remote I/O stations via PROFINET IO. In standard automation systems, the PN/IE interfaces of type CP 443-1 communications modules can also be used for PROFINET IO.

The maximum availability with minimum fault reaction times is achieved by the AS Redundancy Station (2 H/FH systems) in conjunction with the system redundancy of the I/O devices. System redundancy refers to a type of PROFINET IO communication where each I/O device establishes a communication connection to each of the two CPUs of an AS Redundancy Station over the topological network.

Runtime licenses

Each automation system is shipped with the SIMATIC PCS 7 AS Runtime License for 100 process objects (POs). Safety-related automation systems are additionally shipped with the SIMATIC S7 F Systems RT License. The 100 POs of the SIMATIC PCS 7 AS Runtime license can be expanded by additional Runtime licenses for 100, 1 000 or 10 000 POs. The process objects of additional Runtime licenses can be added to process objects which already exist. The number and type (e.g. 100 or 1 000) of additional Runtime licenses is irrelevant.

Individual configuration of AS bundles

The various versions of the SIMATIC PCS 7 automation systems AS 412 to AS 417 are available as AS bundles as follows:

- Individual components, combined per station in one consignment
- Preassembled and tested complete systems (no extra charge compared to delivery of individual components)

Typical combinations can be selected from tables in the section "Selection and ordering data".

The complete range is available to you via two configurators in the Industry Mall:

© Siemens AG 2024

Design (continued)

- SIMATIC PCS 7 AS Single Station configurator
- SIMATIC PCS 7 AS Redundancy Station configurator

Ordering information

- For a redundancy configuration based on 2 AS Single Stations, 4 sync modules (up to 10 m or 10 km) and 2 FO sync cables are additionally required. The selection depends on the distance between the two AS single stations.
- FO sync cables longer than 1 m must always be ordered separately (2 cables required in each case).

Accessories

Backup batteries

Lithium backup batteries of type AA with 2.3 Ah are used in the power supply modules of all SIMATIC PCS 7 automation systems AS 412 to AS 417. Since lithium batteries are easily inflammable, more rigorous transport and storage regulations apply to them.

To avoid subjecting the AS bundles to these more rigorous transport and storage regulations, the backup batteries must be ordered and delivered separately (Article No. 6ES7971-0BA00).

The following backup batteries are required depending on the configuration of the AS bundles:

- SIMATIC PCS 7 AS Single Station:
  - With 1 power supply module: 2 units
  - With 2 redundant power supply modules: 4 units
- SIMATIC PCS 7 AS Redundancy Station:
  - With 2 power supply modules: 4 units
  - With 2 x 2 redundant power supply modules: 8 units

© Siemens AG 2024

Selection and ordering data

Configuration tables for standard automation systems

	Article No.									
AS 414-3 with SIMATIC PCS 7 AS Runtime license for 100 POs CPU with 3 interfaces (MPI/DP and slot for IF module) 4 MB work memory (2 MB each for program and data)	**6ES7654-** ●	●	●	●	●	-	●	●	G	●
Type of delivery										
• Single components, not pre-assembled	**7**									
• Pre-assembled and tested	**8**									
Memory card										
• Memory card 2 MB RAM (up to approx. 100 POs)		**B**								
• Memory card 4 MB RAM (up to approx. 210 POs)		**C**								
• Memory card 8 MB RAM (up to approx. 800 POs)		**D**								
CPU type										
• CPU 414-3 (up to approx. 450 POs)			**C**							
Additive IF 964-DP interface modules										
• Without additive IF 964-DP				**0**						
• 1 × IF 964-DP				**1**						
Interface to Industrial Ethernet/PROFINET plant bus										
• 1 × CP 443-1EX30					**3**					
• 2 × CP 443-1EX30					**4**					
Racks										
• UR2 (9 slots), aluminum							**3**			
• UR2 (9 slots), steel							**4**			
• UR1 (18 slots), aluminum							**5**			
• UR1 (18 slots), steel							**6**			
Power supply (without backup batteries)										
• 1 × PS 407, 10 A for 120/230 V AC/DC								**B**		
• 1 × PS 407, 10 A for 120/230 V AC/DC, optional redundancy								**C**		
• 1 × PS 407, 20 A for 120/230 V AC/DC								**D**		
• 2 × PS 407, 10 A for 120/230 V AC/DC, optional redundancy								**E**		
• 1 × PS 405, 10 A for 24 V DC								**G**		
• 1 × PS 405, 10 A for 24 V DC, optional redundancy								**H**		
• 1 × PS 405, 20 A for 24 V DC								**J**		
• 2 × PS 405, 10 A for 24 V DC, optional redundancy								**K**		
Additive PROFIBUS DP interface modules										
• Without CP 443-5 Extended										**0**
• 1 × CP 443-5 Extended										**1**
• 2 × CP 443-5 Extended										**2**
• 3 × CP 443-5 Extended[1)]										**3**
• 4 × CP 443-5 Extended[1)]										**4**

1) With the UR2 rack in combination with a redundant power supply, the number of additive CP 443-5 Extended is limited to 2.

	Article No.									
AS 416-2 with SIMATIC PCS 7 AS Runtime license for 100 POs CPU with 2 interfaces (MPI/DP and DP) 8 MB work memory (4 MB each for program and data)	**6ES7654-** ●	●	●	●	●	-	●	●	G	●
Type of delivery										
• Single components, not pre-assembled	**7**									
• Pre-assembled and tested	**8**									
Memory card										
• Memory card 4 MB RAM (up to approx. 210 POs)		**C**								
• Memory card 8 MB RAM (up to approx. 800 POs)		**D**								
• Memory card 16 MB RAM (up to approx. 3 000 POs)		**E**								

© Siemens AG 2024

Selection and ordering data (continued)

	Article No.									
CPU type										
• CPU 416-2 (up to approx. 900 POs)			G							
Additive IF 964-DP interface modules										
• Without additive IF 964-DP				0						
Interface to Industrial Ethernet/PROFINET plant bus										
• 1 × CP 443-1EX30					3					
• 2 × CP 443-1EX30					4					
Racks										
• UR2 (9 slots), aluminum							3			
• UR2 (9 slots), steel							4			
• UR1 (18 slots), aluminum							5			
• UR1 (18 slots), steel							6			
Power supply (without backup batteries)										
• 1 × PS 407, 10 A for 120/230 V AC/DC								B		
• 1 × PS 407, 10 A for 120/230 V AC/DC, optional redundancy								C		
• 1 × PS 407, 20 A for 120/230 V AC/DC								D		
• 2 × PS 407, 10 A for 120/230 V AC/DC, optional redundancy								E		
• 1 × PS 405, 10 A for 24 V DC								G		
• 1 × PS 405, 10 A for 24 V DC, optional redundancy								H		
• 1 × PS 405, 20 A for 24 V DC								J		
• 2 × PS 405, 10 A for 24 V DC, optional redundancy								K		
Additive PROFIBUS DP interface modules										
• Without CP 443-5 Extended										0
• 1 × CP 443-5 Extended										1
• 2 × CP 443-5 Extended										2
• 3 × CP 443-5 Extended										3
• 4 × CP 443-5 Extended[1]										4

[1] With the UR2 rack in combination with a redundant power supply, the number of additive CP 443-5 Extended is limited to 3.

	Article No.									
AS 416-3	6ES7654-									
with SIMATIC PCS 7 AS Runtime license for 100 POs CPU with 3 interfaces (MPI/DP, DP and slot for IF module) 16 MB work memory (8 MB each for program and data)	●	●	●	●	●	-	●	●	G	●
Type of delivery										
• Single components, not pre-assembled	7									
• Pre-assembled and tested	8									
Memory card										
• Memory card 4 MB RAM (up to approx. 210 POs)		C								
• Memory card 8 MB RAM (up to approx. 800 POs)		D								
• Memory card 16 MB RAM (up to approx. 2 100 POs)		E								
CPU type										
• CPU 416-3 (up to approx. 1 500 POs)			H							
Additive IF 964-DP interface modules										
• Without additive IF 964-DP				0						
• 1 × IF 964-DP				1						
Interface to Industrial Ethernet/PROFINET plant bus										
• 1 × CP 443-1EX30					3					
• 2 × CP 443-1EX30					4					
Racks										
• UR2 (9 slots), aluminum							3			
• UR2 (9 slots), steel							4			
• UR1 (18 slots), aluminum							5			
• UR1 (18 slots), steel							6			

© Siemens AG 2024

Selection and ordering data (continued)

	Article No.									
Power supply (without backup batteries)										
• 1 × PS 407, 10 A for 120/230 V AC/DC								B		
• 1 × PS 407, 10 A for 120/230 V AC/DC, optional redundancy								C		
• 1 × PS 407, 20 A for 120/230 V AC/DC								D		
• 2 × PS 407, 10 A for 120/230 V AC/DC, optional redundancy								E		
• 1 × PS 405, 10 A for 24 V DC								G		
• 1 × PS 405, 10 A for 24 V DC, optional redundancy								H		
• 1 × PS 405, 20 A for 24 V DC								J		
• 2 × PS 405, 10 A for 24 V DC, optional redundancy								K		
Additive PROFIBUS DP interface modules										
• Without CP 443-5 Extended										0
• 1 × CP 443-5 Extended										1
• 2 × CP 443-5 Extended										2
• 3 × CP 443-5 Extended[1)]										3
• 4 × CP 443-5 Extended[1)]										4

1) With the UR2 rack in combination with a redundant power supply, the number of additive CP 443-5 Extended is limited to 2.

	Article No.									
AS 417-4 with SIMATIC PCS 7 AS Runtime license for 100 POs CPU with 4 interfaces (MPI/DP, DP and 2 slots for IF modules) 30 MB work memory (15 MB each for program and data)	6ES7654- ●	●	●	●	●	-	●	●	G	●
Type of delivery										
• Single components, not pre-assembled	7									
• Pre-assembled and tested	8									
Memory card										
• Memory card 8 MB RAM (up to approx. 800 POs)		D								
• Memory card 16 MB RAM (up to approx. 2 100 POs)		E								
• Memory card 64 MB RAM (> 2 100 POs)		G								
CPU type										
• CPU 417-4 (up to approx. 2 200 POs)			K							
Additive IF 964-DP interface modules										
• Without additive IF 964-DP				0						
• 1 × IF 964-DP				1						
• 2 × IF 964-DP				2						
Interface to Industrial Ethernet/PROFINET plant bus										
• 1 × CP 443-1EX30					3					
• 2 × CP 443-1EX30					4					
Racks										
• UR2 (9 slots), aluminum							3			
• UR2 (9 slots), steel							4			
• UR1 (18 slots), aluminum							5			
• UR1 (18 slots), steel							6			
Power supply (without backup batteries)										
• 1 × PS 407, 10 A for 120/230 V AC/DC								B		
• 1 × PS 407, 10 A for 120/230 V AC/DC, optional redundancy								C		
• 1 × PS 407, 20 A for 120/230 V AC/DC								D		
• 2 × PS 407, 10 A for 120/230 V AC/DC, optional redundancy								E		
• 1 × PS 405, 10 A for 24 V DC								G		
• 1 × PS 405, 10 A for 24 V DC, optional redundancy								H		
• 1 × PS 405, 20 A for 24 V DC								J		
• 2 × PS 405, 10 A for 24 V DC, optional redundancy								K		

© Siemens AG 2024

Selection and ordering data (continued)

	Article No.									
Additive PROFIBUS DP interface modules										
• Without CP 443-5 Extended										0
• 1 × CP 443-5 Extended										1
• 2 × CP 443-5 Extended										2
• 3 × CP 443-5 Extended[1)]										3
• 4 × CP 443-5 Extended[1)]										4

[1)] With the UR2 rack in combination with a redundant power supply, the number of additive CP 443-5 Extended is limited to 2.

	Article No.									
AS 414-3IE with SIMATIC PCS 7 AS Runtime license for 100 POs CPU with 2 DP interfaces (MPI/DP and slot for IF module) 4 MB work memory (2 MB each for program and data)	6ES7654- ●	●	●	●	●	-	●	●	G	●
Type of delivery										
• Single components, not pre-assembled	7									
• Pre-assembled and tested	8									
Memory card										
• Memory card 2 MB RAM (up to approx. 100 POs)		B								
• Memory card 4 MB RAM (up to approx. 210 POs)		C								
• Memory card 8 MB RAM (up to approx. 800 POs)		D								
CPU type										
• CPU 414-3 PN/DP (up to approx. 450 POs)			D							
Additive IF 964-DP interface modules										
• Without additive IF 964-DP				0						
• 1 × IF 964-DP				1						
Interface to Industrial Ethernet/PROFINET plant bus										
• Integrated, without CP 443-1					0					
• 1 × CP 443-1EX30					3					
• 2 × CP 443-1EX30					4					
Racks										
• UR2 (9 slots), aluminum							3			
• UR2 (9 slots), steel							4			
• UR1 (18 slots), aluminum							5			
• UR1 (18 slots), steel							6			
Power supply (without backup batteries)										
• 1 × PS 407, 10 A for 120/230 V AC/DC								B		
• 1 × PS 407, 10 A for 120/230 V AC/DC, optional redundancy								C		
• 1 × PS 407, 20 A for 120/230 V AC/DC								D		
• 2 × PS 407, 10 A for 120/230 V AC/DC, optional redundancy								E		
• 1 × PS 405, 10 A for 24 V DC								G		
• 1 × PS 405, 10 A for 24 V DC, optional redundancy								H		
• 1 × PS 405, 20 A for 24 V DC								J		
• 2 × PS 405, 10 A for 24 V DC, optional redundancy								K		
Additive PROFIBUS DP interface modules										
• Without CP 443-5 Extended										0
• 1 × CP 443-5 Extended										1
• 2 × CP 443-5 Extended										2
• 3 × CP 443-5 Extended										3
• 4 × CP 443-5 Extended[1)]										4

[1)] With the UR2 rack in combination with a redundant power supply, the number of additive CP 443-5 Extended is limited to 3.

© Siemens AG 2024

Selection and ordering data (continued)

	Article No.									
AS 416-3IE with SIMATIC PCS 7 AS Runtime license for 100 POs CPU with 2 DP interfaces (MPI/DP and slot for IF module) 16 MB work memory (8 MB each for program and data)	6ES7654- ●	●	●	●	●	-	●	●	G	●
Type of delivery										
• Single components, not pre-assembled	7									
• Pre-assembled and tested	8									
Memory card										
• Memory card 4 MB RAM (up to approx. 210 POs)		C								
• Memory card 8 MB RAM (up to approx. 800 POs)		D								
• Memory card 16 MB RAM (up to approx. 2 100 POs)		E								
CPU type										
• CPU 416-3 PN/DP (up to approx. 1 500 POs)			J							
Additive IF 964-DP interface modules										
• Without additive IF 964-DP				0						
• 1 × IF 964-DP				1						
Interface to Industrial Ethernet/PROFINET plant bus										
• Integrated, without CP 443-1					0					
• 1 × CP 443-1EX30					3					
• 2 × CP 443-1EX30					4					
Racks										
• UR2 (9 slots), aluminum							3			
• UR2 (9 slots), steel							4			
• UR1 (18 slots), aluminum							5			
• UR1 (18 slots), steel							6			
Power supply (without backup batteries)										
• 1 × PS 407, 10 A for 120/230 V AC/DC								B		
• 1 × PS 407, 10 A for 120/230 V AC/DC, optional redundancy								C		
• 1 × PS 407, 20 A for 120/230 V AC/DC								D		
• 2 × PS 407, 10 A for 120/230 V AC/DC, optional redundancy								E		
• 1 × PS 405, 10 A for 24 V DC								G		
• 1 × PS 405, 10 A for 24 V DC, optional redundancy								H		
• 1 × PS 405, 20 A for 24 V DC								J		
• 2 × PS 405, 10 A for 24 V DC, optional redundancy								K		
Additive PROFIBUS DP interface modules										
• Without CP 443-5 Extended										0
• 1 × CP 443-5 Extended										1
• 2 × CP 443-5 Extended										2
• 3 × CP 443-5 Extended										3
• 4 × CP 443-5 Extended[1]										4

[1] With the UR2 rack in combination with a redundant power supply, the number of additive CP 443-5 Extended is limited to 3.

Single components of standard automation systems

Single components of standard automation systems	
CPU 414-3 work memory 4 MB (2 MB each for program and data); module occupies 2 slots	6ES7414-3XM07-0AB0
CPU 416-2 work memory 8 MB (4 MB each for program and data); module occupies 1 slot	6ES7416-2XP07-0AB0
CPU 416-3 work memory 16 MB (8 MB each for program and data); module occupies 2 slots	6ES7416-3XS07-0AB0

Single components of standard automation systems	
CPU 417-4 32 MB work memory integrated (16 MB each for program and data); module occupies 2 slots	6ES7417-4XT07-0AB0
CPU 414-3 PN/DP work memory 4 MB (2 MB each for program and data); module occupies 2 slots	6ES7414-3EM07-0AB0
CPU 416-3 PN/DP work memory 16 MB (8 MB each for program and data); module occupies 2 slots	6ES7416-3ES07-0AB0

© Siemens AG 2024

Selection and ordering data (continued)

Single components of standard automation systems	
Memory card RAM	
• 2 MB	6ES7952-1AL00-0AA0
• 4 MB	6ES7952-1AM00-0AA0
• 8 MB	6ES7952-1AP00-0AA0
• 16 MB	6ES7952-1AS00-0AA0
• 64 MB	6ES7952-1AY00-0AA0
Memory Card Flash EPROM Only required to update firmware	
• 16 MB	6ES7952-1KS00-0AA0
CP 443-1 Communications module for connecting SIMATIC S7-400 to Industrial Ethernet via TCP/IP, ISO and UDP; PROFINET IO controller, MRP; integrated real-time switch ERTEC with two ports; 2 × RJ45 interface; S7 communication, open communication (SEND/RECEIVE) with FETCH/WRITE, with or without RFC 1006, DHCP, SNMP V2, diagnostics, multicast, access protection via IP access list, initialization via LAN 10/100 Mbps; with electronic manual on DVD	6GK7443-1EX30-0XE0
CP 443-5 Extended Communications module for connection of SIMATIC S7-400 to PROFIBUS as DP master or for S7 communication, for increasing the number of DP lines, for data record routing with SIMATIC PDM and for 10 ms time stamping, electronic manual on CD; module occupies 1 slot	6GK7443-5DX05-0XE0
IF 964-DP Interface module for connection of another PROFIBUS DP line, for plugging into a free DP module slot of the CPU	6ES7964-2AA04-0AB0
PS 407 power supply module; 10 A 120/230 V AC/DC; 5 V DC/10 A, 24 V DC/1 A; with battery compartment for 2 backup batteries, module occupies 2 slots	6ES7407-0KA02-0AA0
PS 407 power supply module; 10 A, optional redundancy 120/230 V AC/DC; 5 V DC/10 A, 24 V DC/1 A; with battery compartment for 2 backup batteries, module occupies 2 slots	6ES7407-0KR02-0AA0
PS 407 power supply module; 20 A 120/230 V AC/DC; 5 V DC/20 A, 24 V DC/1 A; with battery compartment for 2 backup batteries, module occupies 2 slots	6ES7407-0RA02-0AA0
PS 405 power supply module; 10 A 24 V DC; 5 V DC/10 A, 24 V DC/1 A; with battery compartment for 2 backup batteries, module occupies 2 slots	6ES7405-0KA02-0AA0

Single components of standard automation systems	
PS 405 power supply module; 10 A, optional redundancy 24 V DC; 5 V DC/10 A, 24 V DC/1 A; with battery compartment for 2 backup batteries, module occupies 2 slots	6ES7405-0KR02-0AA0
PS 405 power supply module; 20 A 24 V DC; 5 V DC/20 A, 24 V DC/1 A; with battery compartment for 2 backup batteries, module occupies 2 slots	6ES7405-0RA02-0AA0
Backup battery Type AA, 2.3 Ah	6ES7971-0BA00
Aluminum UR1 rack 18 slots	6ES7400-1TA11-0AA0
Aluminum UR2 rack 9 slots	6ES7400-1JA11-0AA0
Steel UR1 rack 18 slots	6ES7400-1TA01-0AA0
Steel UR2 rack 9 slots	6ES7400-1JA01-0AA0
Runtime licenses for SIMATIC PCS 7 automation systems (can be added to existing licenses)	
SIMATIC PCS 7 AS Runtime license Language-neutral, floating license for 1 user Without SIMATIC PCS 7 Software Media Package	
• Goods delivery License key on USB flash drive, Certificate of License	
- 100 POs	6ES7653-2BA00-0XB5
- 1 000 POs	6ES7653-2BB00-0XB5
- 10 000 POs	6ES7653-2BC00-0XB5
• Online delivery License key download, online Certificate of License : Email address required!	
- 100 POs	6ES7653-2BA00-0XH5
- 1 000 POs	6ES7653-2BB00-0XH5
- 10 000 POs	6ES7653-2BC00-0XH5

© Siemens AG 2024

Selection and ordering data

Configuration tables for high-availability automation systems

	Article No.									
AS 412-5-1H (Single Station) with SIMATIC PCS 7 AS Runtime license for 100 POs CPU with 2 PROFIBUS interfaces (MPI/DP master and DP master) and 1 PN/IE interface (2 port switch) 1 MB work memory (512 KB each for program and data)	**6ES7654-** ●	●	●	●	●	-	●	●	G	●
Type of delivery										
• Single components, not pre-assembled	**7**									
• Pre-assembled and tested	**8**									
Memory card										
• Memory card 1 MB RAM (up to approx. 30 POs)		**A**								
• Memory card 2 MB RAM (up to approx. 100 POs)		**B**								
CPU type										
• CPU 412-5H (up to approx. 30 POs)			**A**							
Additive IF 964-DP interface modules										
• Without additive IF 964-DP				**0**						
Interface to Industrial Ethernet plant bus										
• Without interface module					**0**					
• 1 × CP 443-1EX30[1)]					**3**					
• 2 × CP 443-1EX30 for redundant interface module[1)]					**4**					
Racks										
• UR2 (9 slots), aluminum							**3**			
• UR2 (9 slots), steel							**4**			
• UR1 (18 slots), aluminum							**5**			
• UR1 (18 slots), steel							**6**			
Power supply (without backup batteries)										
• 1 × PS 407, 10 A for 120/230 V AC/DC								**B**		
• 1 × PS 407, 10 A for 120/230 V AC/DC, optional redundancy								**C**		
• 1 × PS 407, 20 A for 120/230 V AC/DC								**D**		
• 2 × PS 407, 10 A for 120/230 V AC/DC (redundant)								**E**		
• 1 × PS 405, 10 A for 24 V DC								**G**		
• 1 × PS 405, 10 A for 24 V DC, optional redundancy								**H**		
• 1 × PS 405, 20 A for 24 V DC								**J**		
• 2 × PS 405, 10 A for 24 V DC (redundant)								**K**		
Additive PROFIBUS DP interface modules										
• Without CP 443-5 Extended										**0**
• 1 × CP 443-5 Extended										**1**
• 2 × CP 443-5 Extended[1)]										**2**
• 3 × CP 443-5 Extended[1)]										**3**
• 4 × CP 443-5 Extended[1)]										**4**

[1)] Up to 5 CPs can be plugged into the UR2 rack with a single power supply or up to 3 with a redundant power supply.

	Article No.									
AS 414-5-1H (Single Station) with SIMATIC PCS 7 AS Runtime license for 100 POs CPU with 2 PROFIBUS interfaces (MPI/DP master and DP master) and 1 PN/IE interface (2 port switch) 4 MB work memory (2 MB each for program and data)	**6ES7654-** ●	●	●	●	●	-	●	●	G	●
Type of delivery										
• Single components, not pre-assembled	**7**									
• Pre-assembled and tested	**8**									
Memory card										
• Memory card 2 MB RAM (up to approx. 100 POs)		**B**								
• Memory card 4 MB RAM (up to approx. 210 POs)		**C**								
CPU type										
• CPU 414-5H (up to approx. 350 POs)			**E**							

© Siemens AG 2024

Selection and ordering data (continued)

	Article No.									
Additive IF 964-DP interface modules										
• Without additive IF 964-DP				0						
Interface to Industrial Ethernet plant bus										
• Without interface module					0					
• 1 × CP 443-1EX30[1)]					3					
• 2 × CP 443-1EX30 for redundant interface module[1)]					4					
Racks										
• UR2 (9 slots), aluminum							3			
• UR2 (9 slots), steel							4			
• UR1 (18 slots), aluminum							5			
• UR1 (18 slots), steel							6			
Power supply (without backup batteries)										
• 1 × PS 407, 10 A for 120/230 V AC/DC								B		
• 1 × PS 407, 10 A for 120/230 V AC/DC, optional redundancy								C		
• 1 × PS 407, 20 A for 120/230 V AC/DC								D		
• 2 × PS 407, 10 A for 120/230 V AC/DC (redundant)								E		
• 1 × PS 405, 10 A for 24 V DC								G		
• 1 × PS 405, 10 A for 24 V DC, optional redundancy								H		
• 1 × PS 405, 20 A for 24 V DC								J		
• 2 × PS 405, 10 A for 24 V DC (redundant)								K		
Additive PROFIBUS DP interface modules										
• Without CP 443-5 Extended										0
• 1 × CP 443-5 Extended										1
• 2 × CP 443-5 Extended[1)]										2
• 3 × CP 443-5 Extended[1)]										3
• 4 × CP 443-5 Extended[1)]										4

1) Up to 5 CPs can be plugged into the UR2 rack with a single power supply or up to 3 with a redundant power supply.

	Article No.									
AS 416-5-1H (Single Station)	6ES7654-									
with SIMATIC PCS 7 AS Runtime license for 100 POs CPU with 2 PROFIBUS interfaces (MPI/DP master and DP master) and 1 PN/IE interface (2 port switch) 16 MB work memory (6 MB for program and 10 MB for data)	●	●	●	●	●	-	●	●	G	●
Type of delivery										
• Single components, not pre-assembled	7									
• Pre-assembled and tested	8									
Memory card										
• Memory card 4 MB RAM (up to approx. 210 POs)		C								
• Memory card 8 MB RAM (up to approx. 800 POs)		D								
• Memory card 16 MB RAM (up to approx. 2 100 POs)		E								
CPU type										
• CPU 416-5H (up to approx. 1 200 POs)			P							
Additive IF 964-DP interface modules										
• Without additive IF 964-DP				0						
Interface to Industrial Ethernet plant bus										
• Without interface module					0					
• 1 × CP 443-1EX30[1)]					3					
• 2 × CP 443-1EX30 for redundant interface module[1)]					4					
Racks										
• UR2 (9 slots), aluminum							3			
• UR2 (9 slots), steel							4			
• UR1 (18 slots), aluminum							5			
• UR1 (18 slots), steel							6			

© Siemens AG 2024

Selection and ordering data (continued)

	Article No.									
Power supply (without backup batteries)										
• 1 × PS 407, 10 A for 120/230 V AC/DC								B		
• 1 × PS 407, 10 A for 120/230 V AC/DC, optional redundancy								C		
• 1 × PS 407, 20 A for 120/230 V AC/DC								D		
• 2 × PS 407, 10 A for 120/230 V AC/DC (redundant)								E		
• 1 × PS 405, 10 A for 24 V DC								G		
• 1 × PS 405, 10 A for 24 V DC, optional redundancy								H		
• 1 × PS 405, 20 A for 24 V DC								J		
• 2 × PS 405, 10 A for 24 V DC (redundant)								K		
Additive PROFIBUS DP interface modules										
• Without CP 443-5 Extended										0
• 1 × CP 443-5 Extended										1
• 2 × CP 443-5 Extended[1)]										2
• 3 × CP 443-5 Extended[1)]										3
• 4 × CP 443-5 Extended[1)]										4

1) Up to 5 CPs can be plugged into the UR2 rack with a single power supply or up to 3 with a redundant power supply.

	Article No.									
AS 417-5-1H (Single Station)	6ES7654-									
with SIMATIC PCS 7 AS Runtime license for 100 POs CPU with 2 PROFIBUS interfaces (MPI/DP master and DP master) and 1 PN/IE interface (2 port switch) 32 MB work memory (16 MB each for program and data)	●	●	●	●	●	-	●	●	G	●
Type of delivery										
• Single components, not pre-assembled	7									
• Pre-assembled and tested	8									
Memory card										
• Memory card 4 MB RAM (up to approx. 210 POs)		C								
• Memory card 8 MB RAM (up to approx. 800 POs)		D								
• Memory card 16 MB RAM (up to approx. 2 100 POs)		E								
• Memory card 64 MB RAM		G								
CPU type										
• CPU 417-5H (up to approx. 2 000 POs)			M							
Additive IF 964-DP interface modules										
• Without additive IF 964-DP				0						
Interface to Industrial Ethernet plant bus										
• Without interface module					0					
• 1 × CP 443-1EX30[1)]					3					
• 2 × CP 443-1EX30 for redundant interface module[1)]					4					
Racks										
• UR2 (9 slots), aluminum							3			
• UR2 (9 slots), steel							4			
• UR1 (18 slots), aluminum							5			
• UR1 (18 slots), steel							6			
Power supply (without backup batteries)										
• 1 × PS 407, 10 A for 120/230 V AC/DC								B		
• 1 × PS 407, 10 A for 120/230 V AC/DC, optional redundancy								C		
• 1 × PS 407, 20 A for 120/230 V AC/DC								D		
• 2 × PS 407, 10 A for 120/230 V AC/DC (redundant)								E		
• 1 × PS 405, 10 A for 24 V DC								G		
• 1 × PS 405, 10 A for 24 V DC, optional redundancy								H		
• 1 × PS 405, 20 A for 24 V DC								J		
• 2 × PS 405, 10 A for 24 V DC (redundant)								K		

© Siemens AG 2024

Selection and ordering data (continued)

	Article No.									
Additive PROFIBUS DP interface modules										
• Without CP 443-5 Extended										0
• 1 × CP 443-5 Extended										1
• 2 × CP 443-5 Extended[1)]										2
• 3 × CP 443-5 Extended[1)]										3
• 4 × CP 443-5 Extended[1)]										4

[1)] Up to 5 CPs can be plugged into the UR2 rack with a single power supply or up to 3 with a redundant power supply.

	Article No.									
AS 412-5-2H (Redundancy Station) with SIMATIC PCS 7 AS Runtime license for 100 POs 2 × CPU each with 2 PROFIBUS interfaces (MPI/DP master and DP master) and 1 PN/IE interface (2-port switch) 2 × 1 MB work memory (512 KB each for program and data)	6ES7656- ●	●	●	●	●	-	●	●	F	●
Type of delivery										
• Single components, not pre-assembled	7									
• Pre-assembled and tested	8									
Memory card										
• 2 × Memory Card 1 MB RAM (up to approx. 30 POs)		A								
• 2 × Memory Card 2 MB RAM (up to approx. 100 POs)		B								
CPU type										
• 2 × CPU 412-5H (up to approx. 30 POs)			A							
Sync modules and cables										
• 2 × 2 sync modules for distances up to 10 m and 2 × FO sync cable, 1 m				3						
Interface to Industrial Ethernet plant bus										
• Without interface module					0					
• 2 × CP 443-1EX30 for redundant interface module[1)]					3					
• 2 × 2 CP 443-1EX30 for 4-way connection[1)]					4					
Racks										
• 1 × UR2-H (2 × 9 slots), aluminum							1			
• 1 × UR2-H (2 × 9 slots), steel							2			
• 2 × UR2 (9 slots), aluminum							3			
• 2 × UR2 (9 slots), steel							4			
Power supply (without backup batteries)										
• 2 × PS 407, 10 A for 120/230 V AC/DC								B		
• 2 × PS 407, 10 A for 120/230 V AC/DC, optional redundancy								C		
• 2 × PS 407, 20 A for 120/230 V AC/DC								D		
• 2 × 2 PS 407, 10 A for 120/230 V AC/DC (redundant)								E		
• 2 × PS 405, 10 A for 24 V DC								G		
• 2 × PS 405, 10 A for 24 V DC, optional redundancy								H		
• 2 × PS 405, 20 A for 24 V DC								J		
• 2 × 2 PS 405, 10 A for 24 V DC (redundant)								K		
Additive PROFIBUS DP interface modules										
• Without CP 443-5 Extended										0
• 2 × CP 443-5 Extended										1
• 2 × 2 CP 443-5 Extended[1)]										2
• 2 × 3 CP 443-5 Extended[1)]										3
• 2 × 4 CP 443-5 Extended[1)]										4

[1)] Up to 5 CPs can be plugged in per subsystem with a single power supply or up to 3 with a redundant power supply.

© Siemens AG 2024

Selection and ordering data (continued)

	Article No.									
AS 414-5-2H (Redundancy Station) with SIMATIC PCS 7 AS Runtime license for 100 POs 2 × CPU each with 2 PROFIBUS interfaces (MPI/DP master and DP master) and 1 PN/IE interface (2-port switch) 2 × 4 MB work memory (2 MB each for program and data)	6ES7656- ●	●	●	●	●	-	●	●	F	●
Type of delivery										
• Single components, not pre-assembled	7									
• Pre-assembled and tested	8									
Memory card										
• 2 × Memory Card 2 MB RAM (up to approx. 100 POs)		B								
• 2 × Memory Card 4 MB RAM (up to approx. 210 POs)		C								
CPU type										
• 2 × CPU 414-5H (up to approx. 350 POs)			E							
Sync modules and cables										
• 2 × 2 sync modules for distances up to 10 m and 2 × FO sync cable, 1 m				3						
• 2 × 2 sync modules for up to 10 km and 2 × FO sync cable, 1 m, for testing				4						
Interface to Industrial Ethernet plant bus										
• Without interface module					0					
• 2 × CP 443-1EX30 for redundant interface module[1)]					3					
• 2 × 2 CP 443-1EX30 for 4-way connection[1)]					4					
Racks										
• 1 × UR2-H (2 × 9 slots), aluminum							1			
• 1 × UR2-H (2 × 9 slots), steel							2			
• 2 × UR2 (9 slots), aluminum							3			
• 2 × UR2 (9 slots), steel							4			
Power supply (without backup batteries)										
• 2 × PS 407, 10 A for 120/230 V AC/DC								B		
• 2 × PS 407, 10 A for 120/230 V AC/DC, optional redundancy								C		
• 2 × PS 407, 20 A for 120/230 V AC/DC								D		
• 2 × 2 PS 407, 10 A for 120/230 V AC/DC (redundant)								E		
• 2 × PS 405, 10 A for 24 V DC								G		
• 2 × PS 405, 10 A for 24 V DC, optional redundancy								H		
• 2 × PS 405, 20 A for 24 V DC								J		
• 2 × 2 PS 405, 10 A for 24 V DC (redundant)								K		
Additive PROFIBUS DP interface modules										
• Without CP 443-5 Extended										0
• 2 × CP 443-5 Extended										1
• 2 × 2 CP 443-5 Extended[1)]										2
• 2 × 3 CP 443-5 Extended[1)]										3
• 2 × 4 CP 443-5 Extended[1)]										4

[1)] Up to 5 CPs can be plugged in per subsystem with a single power supply or up to 3 with a redundant power supply.

	Article No.									
AS 416-5-2H (Redundancy Station) with SIMATIC PCS 7 AS Runtime license for 100 POs 2 × CPU each with 2 PROFIBUS interfaces (MPI/DP master and DP master) and 1 PN/IE interface (2-port switch) 2 × 16 MB work memory (6 MB each for program and 10 MB each for data)	6ES7656- ●	●	●	●	●	-	●	●	F	●
Type of delivery										
• Single components, not pre-assembled	7									
• Pre-assembled and tested	8									
Memory card										
• 2 × Memory Card 4 MB RAM (up to approx. 210 POs)		C								
• 2 × Memory Card 8 MB RAM (up to approx. 800 POs)		D								
• 2 × Memory Card 16 MB RAM (up to approx. 2 100 POs)		E								
CPU type										
• 2 × CPU 416-5H (up to approx. 1 200 POs)			P							

© Siemens AG 2024

Selection and ordering data (continued)

	Article No.									
Sync modules and cables										
• 2 × 2 sync modules for distances up to 10 m and 2 × FO sync cable, 1 m				3						
• 2 × 2 sync modules for up to 10 km and 2 × FO sync cable, 1 m, for testing				4						
Interface to Industrial Ethernet plant bus										
• Without interface module					0					
• 2 × CP 443-1EX30 for redundant interface module[1]					3					
• 2 × 2 CP 443-1EX30 for 4-way connection[1]					4					
Racks										
• 1 × UR2-H (2 × 9 slots), aluminum							1			
• 1 × UR2-H (2 × 9 slots), steel							2			
• 2 × UR2 (9 slots), aluminum							3			
• 2 × UR2 (9 slots), steel							4			
Power supply (without backup batteries)										
• 2 × PS 407, 10 A for 120/230 V AC/DC								B		
• 2 × PS 407, 10 A for 120/230 V AC/DC, optional redundancy								C		
• 2 × PS 407, 20 A for 120/230 V AC/DC								D		
• 2 × 2 PS 407, 10 A for 120/230 V AC/DC (redundant)								E		
• 2 × PS 405, 10 A for 24 V DC								G		
• 2 × PS 405, 10 A for 24 V DC, optional redundancy								H		
• 2 × PS 405, 20 A for 24 V DC								J		
• 2 × 2 PS 405, 10 A for 24 V DC (redundant)								K		
Additive PROFIBUS DP interface modules										
• Without CP 443-5 Extended										0
• 2 × CP 443-5 Extended										1
• 2 × 2 CP 443-5 Extended[1]										2
• 2 × 3 CP 443-5 Extended[1]										3
• 2 × 4 CP 443-5 Extended[1]										4

[1] Up to 5 CPs can be plugged in per subsystem with a single power supply or up to 3 with a redundant power supply.

	Article No.									
AS 417-5-2H (Redundancy Station)	6ES7656-									
with SIMATIC PCS 7 AS Runtime license for 100 POs 2 × CPU each with 2 PROFIBUS interfaces (MPI/DP master and DP master) and 1 PN/IE interface (2-port switch) 2 × 32 MB work memory (16 MB each for program and data)	●	●	●	●	●	-	●	●	F	●
Type of delivery										
• Single components, not pre-assembled	7									
• Pre-assembled and tested	8									
Memory card										
• 2 × Memory Card 4 MB RAM (up to approx. 210 POs)		C								
• 2 × Memory Card 8 MB RAM (up to approx. 800 POs)		D								
• 2 × Memory Card 16 MB RAM (up to approx. 2 100 POs)		E								
CPU type										
• 2 × CPU 417-5H (up to approx. 2 000 POs)			M							
Sync modules and cables										
• 2 × 2 sync modules for distances up to 10 m and 2 × FO sync cable, 1 m				3						
• 2 × 2 sync modules for up to 10 km and 2 × FO sync cable, 1 m, for testing				4						
Interface to Industrial Ethernet plant bus										
• Without interface module					0					
• 2 × CP 443-1EX30 for redundant interface module[1]					3					
• 2 × 2 CP 443-1EX30 for 4-way connection[1]					4					
Racks										
• 1 × UR2-H (2 × 9 slots), aluminum							1			
• 1 × UR2-H (2 × 9 slots), steel							2			

© Siemens AG 2024

Selection and ordering data (continued)

	Article No.								
• 2 × UR2 (9 slots), aluminum						3			
• 2 × UR2 (9 slots), steel						4			
Power supply (without backup batteries)									
• 2 × PS 407, 10 A for 120/230 V AC/DC							B		
• 2 × PS 407, 10 A for 120/230 V AC/DC, optional redundancy							C		
• 2 × PS 407, 20 A for 120/230 V AC/DC							D		
• 2 × 2 PS 407, 10 A for 120/230 V AC/DC (redundant)							E		
• 2 × PS 405, 10 A for 24 V DC							G		
• 2 × PS 405, 10 A for 24 V DC, optional redundancy							H		
• 2 × PS 405, 20 A for 24 V DC							J		
• 2 × 2 PS 405, 10 A for 24 V DC (redundant)							K		
Additive PROFIBUS DP interface modules									
• Without CP 443-5 Extended									0
• 2 × CP 443-5 Extended									1
• 2 × 2 CP 443-5 Extended[1]									2
• 2 × 3 CP 443-5 Extended[1]									3
• 2 × 4 CP 443-5 Extended[1]									4

[1] Up to 5 CPs can be plugged in per subsystem with a single power supply or up to 3 with a redundant power supply.

Single components of high availability automation systems

Single components of high availability automation systems	
Single components of the high availability SIMATIC PCS 7 automation systems	
CPU 412-5H PN/DP 1 MB work memory (512 KB each for program and data) Module occupies 2 slots	**6ES7412-5HK06-0AB0**
CPU 414-5H PN/DP 4 MB work memory (2 MB each for program and data) Module occupies 2 slots	**6ES7414-5HM06-0AB0**
CPU 416-5H PN/DP 16 MB work memory (6 MB for program and 10 MB for data) Module occupies 2 slots	**6ES7416-5HS06-0AB0**
CPU 417-5H PN/DP 32 MB work memory (16 MB each for program and data) Module occupies 2 slots	**6ES7417-5HT06-0AB0**
Sync set For linking the two redundant CPU 412-5H, 414-5H, 416-5H or 417-5H; for distances up to	
• 10 m, consisting of 4 sync modules for up to 10 m and 2 FO sync cables, 1 m each	**6ES7656-7XX30-0XE0**
• 10 km, consisting of 4 sync modules for up to 10 km : please order fiber-optic sync cables (2 units) in the required length separately.	**6ES7656-7XX40-0XE0**
Sync module For linking the two CPU 412-5H, 414-5H, 416-5H or 417-5H; 2 modules required per CPU For distances of up to	
• 10 m	**6ES7960-1AA06-0XA0**
• 10 km	**6ES7960-1AB06-0XA0**

Single components of high availability automation systems	
Sync cable (fiber-optic connecting cable) For connecting the two CPU 412-5H, 414-5H, 416-5H or 417-5H; each redundant automation system requires 2 cables	
• 1 m	**6ES7960-1AA04-5AA0**
• 2 m	**6ES7960-1AA04-5BA0**
• 10 m	**6ES7960-1AA04-5KA0**
Other lengths	On request
Memory card RAM	
• 1 MB	**6ES7952-1AK00-0AA0**
• 2 MB	**6ES7952-1AL00-0AA0**
• 4 MB	**6ES7952-1AM00-0AA0**
• 8 MB	**6ES7952-1AP00-0AA0**
• 16 MB	**6ES7952-1AS00-0AA0**
• 64 MB	**6ES7952-1AY00-0AA0**
Memory Card Flash EPROM Only required to update firmware. Alternative: firmware update via the engineering system	
• 16 MB	**6ES7952-1KS00-0AA0**
CP 443-1 Communications module for connecting SIMATIC S7-400 to Industrial Ethernet via TCP/IP, ISO and UDP; PROFINET IO controller, MRP; integrated real-time switch ERTEC with two ports; 2 × RJ45 interface; S7 communication, open communication (SEND/RECEIVE) with FETCH/WRITE, with or without RFC 1006, DHCP, SNMP V2, diagnostics, multicast, access protection via IP access list, initialization via LAN 10/100 Mbps; with electronic manual on DVD	**6GK7443-1EX30-0XE0**

© Siemens AG 2024

Selection and ordering data (continued)

Single components of high availability automation systems	
CP 443-5 Extended Communications module for connection of SIMATIC S7-400 to PROFIBUS as DP master or for S7 communication, for increasing the number of DP lines, for data record routing with SIMATIC PDM and for 10 ms time stamping, electronic manual on CD; module occupies 1 slot	6GK7443-5DX05-0XE0
PS 407 power supply module; 10 A 120/230 V AC/DC; 5 V DC/10 A, 24 V DC/1 A; with battery compartment for 2 backup batteries, module occupies 2 slots	6ES7407-0KA02-0AA0
PS 407 power supply module; 10 A, optional redundancy 120/230 V AC/DC; 5 V DC/10 A, 24 V DC/1 A; with battery compartment for 2 backup batteries, module occupies 2 slots	6ES7407-0KR02-0AA0
PS 407 power supply module; 20 A 120/230 V AC/DC; 5 V DC/20 A, 24 V DC/1 A; with battery compartment for 2 backup batteries, module occupies 2 slots	6ES7407-0RA02-0AA0
PS 405 power supply module; 10 A 24 V DC; 5 V DC/10 A, 24 V DC/1 A; with battery compartment for 2 backup batteries, module occupies 2 slots	6ES7405-0KA02-0AA0

Single components of high availability automation systems	
PS 405 power supply module; 10 A, optional redundancy 24 V DC; 5 V DC/10 A, 24 V DC/1 A; with battery compartment for 2 backup batteries, module occupies 2 slots	6ES7405-0KR02-0AA0
PS 405 power supply module; 20 A 24 V DC; 5 V DC/20 A, 24 V DC/1 A; with battery compartment for 2 backup batteries, module occupies 2 slots	6ES7405-0RA02-0AA0
Backup battery Type AA, 2.3 Ah	6ES7971-0BA00
Aluminum UR1 rack 18 slots	6ES7400-1TA11-0AA0
Aluminum UR2 rack 9 slots	6ES7400-1JA11-0AA0
Aluminum UR2-H rack For divided central controllers; 2 × 9 slots	6ES7400-2JA10-0AA0
Steel UR1 rack 18 slots	6ES7400-1TA01-0AA0
Steel UR2 rack 9 slots	6ES7400-1JA01-0AA0
Steel UR2-H rack For divided central controllers; 2 × 9 slots	6ES7400-2JA00-0AA0
Runtime licenses for SIMATIC PCS 7 automation systems (can be added to existing licenses)	See "Single components of standard automation systems"

© Siemens AG 2024

Selection and ordering data

Configuration tables for safety-related automation systems

	Article No.									
AS 412F (Single Station) with SIMATIC PCS 7 AS Runtime license for 100 POs CPU with 2 PROFIBUS interfaces (MPI/DP master and DP master) and 1 PN/IE interface (2 port switch) 1 MB work memory (512 KB each for program and data)	**6ES7654-** ●	●	●	●	●	-	●	●	G	●
Type of delivery										
• Single components, not pre-assembled	**7**									
• Pre-assembled and tested	**8**									
Memory card										
• Memory card 1 MB RAM (up to approx. 30 POs)		**A**								
• Memory card 2 MB RAM (up to approx. 100 POs)		**B**								
CPU type										
• CPU 412-5H with SIMATIC S7 F Systems RT license (up to approx. 30 POs)			**B**							
Additive interface modules										
• Without additive interface module				**0**						
Interface to Industrial Ethernet plant bus										
• Without interface module					**0**					
• 1 × CP 443-1EX30[1]					**3**					
• 2 × CP 443-1EX30 for redundant interface module[1]					**4**					
Racks										
• UR2 (9 slots), aluminum							**3**			
• UR2 (9 slots), steel							**4**			
• UR1 (18 slots), aluminum							**5**			
• UR1 (18 slots), steel							**6**			
Power supply (without backup batteries)										
• 1 × PS 407, 10 A for 120/230 V AC/DC								**B**		
• 1 × PS 407, 10 A for 120/230 V AC/DC, optional redundancy								**C**		
• 1 × PS 407, 20 A for 120/230 V AC/DC								**D**		
• 2 × PS 407, 10 A for 120/230 V AC/DC (redundant)								**E**		
• 1 × PS 405, 10 A for 24 V DC								**G**		
• 1 × PS 405, 10 A for 24 V DC, optional redundancy								**H**		
• 1 × PS 405, 20 A for 24 V DC								**J**		
• 2 × PS 405, 10 A for 24 V DC (redundant)								**K**		
Additive PROFIBUS DP interface modules										
• Without CP 443-5 Extended										**0**
• 1 × CP 443-5 Extended										**1**
• 2 × CP 443-5 Extended[1]										**2**
• 3 × CP 443-5 Extended[1]										**3**
• 4 × CP 443-5 Extended[1]										**4**

[1] Up to 5 CPs can be plugged into the UR2 rack with a single power supply or up to 3 with a redundant power supply.

	Article No.									
AS 414F (Single Station) with SIMATIC PCS 7 AS Runtime license for 100 POs CPU with 2 PROFIBUS interfaces (MPI/DP master and DP master) and 1 PN/IE interface (2 port switch) 4 MB work memory (2 MB each for program and data)	**6ES7654-** ●	●	●	●	●	-	●	●	G	●
Type of delivery										
• Single components, not pre-assembled	**7**									
• Pre-assembled and tested	**8**									
Memory card										
• Memory card 2 MB RAM (up to approx. 100 POs)		**B**								
• Memory card 4 MB RAM (up to approx. 210 POs)		**C**								
CPU type										
• CPU 414-5H with SIMATIC S7 F Systems RT license (up to approx. 350 POs)			**F**							

© Siemens AG 2024

Selection and ordering data (continued)

	Article No.									
Additive interface modules										
• Without additive interface module				0						
Interface to Industrial Ethernet plant bus										
• Without interface module					0					
• 1 × CP 443-1EX30[1)]					3					
• 2 × CP 443-1EX30 for redundant interface module[1)]					4					
Racks										
• UR2 (9 slots), aluminum							3			
• UR2 (9 slots), steel							4			
• UR1 (18 slots), aluminum							5			
• UR1 (18 slots), steel							6			
Power supply (without backup batteries)										
• 1 × PS 407, 10 A for 120/230 V AC/DC								B		
• 1 × PS 407, 10 A for 120/230 V AC/DC, optional redundancy								C		
• 1 × PS 407, 20 A for 120/230 V AC/DC								D		
• 2 × PS 407, 10 A for 120/230 V AC/DC (redundant)								E		
• 1 × PS 405, 10 A for 24 V DC								G		
• 1 × PS 405, 10 A for 24 V DC, optional redundancy								H		
• 1 × PS 405, 20 A for 24 V DC								J		
• 2 × PS 405, 10 A for 24 V DC (redundant)								K		
Additive PROFIBUS DP interface modules										
• Without CP 443-5 Extended										0
• 1 × CP 443-5 Extended										1
• 2 × CP 443-5 Extended[1)]										2
• 3 × CP 443-5 Extended[1)]										3
• 4 × CP 443-5 Extended[1)]										4

1) Up to 5 CPs can be plugged into the UR2 rack with a single power supply or up to 3 with a redundant power supply.

	Article No.									
AS 416F (Single Station)	6ES7654-									
with SIMATIC PCS 7 AS Runtime license for 100 POs CPU with 2 PROFIBUS interfaces (MPI/DP master and DP master) and 1 PN/IE interface (2 port switch) 16 MB work memory (6 MB for program and 10 MB for data)	●	●	●	●	●	-	●	●	G	●
Type of delivery										
• Single components, not pre-assembled	7									
• Pre-assembled and tested	8									
Memory card										
• Memory card 4 MB RAM (up to approx. 210 POs)		C								
• Memory card 8 MB RAM (up to approx. 800 POs)		D								
• Memory card 16 MB RAM (up to approx. 2 100 POs)		E								
CPU type										
• CPU 416-5H with SIMATIC S7 F Systems RT license (up to approx. 1 200 POs)			Q							
Additive IF 964-DP interface modules										
• Without additive IF 964-DP				0						
Interface to Industrial Ethernet plant bus										
• Without interface module					0					
• 1 × CP 443-1EX30[1)]					3					
• 2 × CP 443-1EX30 for redundant interface module[1)]					4					
Racks										
• UR2 (9 slots), aluminum							3			
• UR2 (9 slots), steel							4			
• UR1 (18 slots), aluminum							5			
• UR1 (18 slots), steel							6			

© Siemens AG 2024

Selection and ordering data (continued)

	Article No.									
Power supply (without backup batteries)										
• 1 × PS 407, 10 A for 120/230 V AC/DC								B		
• 1 × PS 407, 10 A for 120/230 V AC/DC, optional redundancy								C		
• 1 × PS 407, 20 A for 120/230 V AC/DC								D		
• 2 × PS 407, 10 A for 120/230 V AC/DC (redundant)								E		
• 1 × PS 405, 10 A for 24 V DC								G		
• 1 × PS 405, 10 A for 24 V DC, optional redundancy								H		
• 1 × PS 405, 20 A for 24 V DC								J		
• 2 × PS 405, 10 A for 24 V DC (redundant)								K		
Additive PROFIBUS DP interface modules										
• Without CP 443-5 Extended										0
• 1 × CP 443-5 Extended										1
• 2 × CP 443-5 Extended[1)]										2
• 3 × CP 443-5 Extended[1)]										3
• 4 × CP 443-5 Extended[1)]										4

[1)] Up to 5 CPs can be plugged into the UR2 rack with a single power supply or up to 3 with a redundant power supply.

	Article No.									
AS 417F (Single Station)	6ES7654-									
with SIMATIC PCS 7 AS Runtime license for 100 POs CPU with 2 PROFIBUS interfaces (MPI/DP master and DP master) and 1 PN/IE interface (2 port switch) 32 MB work memory (16 MB each for program and data)	●	●	●	●	●	-	●	●	G	●
Type of delivery										
• Single components, not pre-assembled	7									
• Pre-assembled and tested	8									
Memory card										
• Memory card 4 MB RAM (up to approx. 210 POs)		C								
• Memory card 8 MB RAM (up to approx. 800 POs)		D								
• Memory card 16 MB RAM (up to approx. 2 100 POs)		E								
CPU type										
• CPU 417-5H with SIMATIC S7 F Systems RT license (up to approx. 2 000 POs)			N							
Additive interface modules										
• Without additive interface module				0						
Interface to Industrial Ethernet plant bus										
• Without interface module					0					
• 1 × CP 443-1EX30[1)]					3					
• 2 × CP 443-1EX30 for redundant interface module[1)]					4					
Racks										
• UR2 (9 slots), aluminum							3			
• UR2 (9 slots), steel							4			
• UR1 (18 slots), aluminum							5			
• UR1 (18 slots), steel							6			
Power supply (without backup batteries)										
• 1 × PS 407, 10 A for 120/230 V AC/DC								B		
• 1 × PS 407, 10 A for 120/230 V AC/DC, optional redundancy								C		
• 1 × PS 407, 20 A for 120/230 V AC/DC								D		
• 2 × PS 407, 10 A for 120/230 V AC/DC (redundant)								E		
• 1 × PS 405, 10 A for 24 V DC								G		
• 1 × PS 405, 10 A for 24 V DC, optional redundancy								H		
• 1 × PS 405, 20 A for 24 V DC								J		
• 2 × PS 405, 10 A for 24 V DC (redundant)								K		
Additive PROFIBUS DP interface modules										
• Without CP 443-5 Extended										0
• 1 × CP 443-5 Extended										1

© Siemens AG 2024

Selection and ordering data (continued)

	Article No.									
• 2 × CP 443-5 Extended[1]										2
• 3 × CP 443-5 Extended[1]										3
• 4 × CP 443-5 Extended[1]										4

[1] Up to 5 CPs can be plugged into the UR2 rack with a single power supply or up to 3 with a redundant power supply.

	Article No.									
AS 412FH (Redundant Station)	6ES7656-									
with SIMATIC PCS 7 AS Runtime license for 100 POs 2 × CPU each with 2 PROFIBUS interfaces (MPI/DP master and DP master) and 1 PN/IE interface (2-port switch) 2 × 1 MB work memory (512 KB each for program and data)	●	●	●	●	●	-	●	●	F	●
Type of delivery										
• Single components, not pre-assembled	7									
• Pre-assembled and tested	8									
Memory card										
• 2 × Memory Card 1 MB RAM (up to approx. 30 POs)		A								
• 2 × Memory Card 2 MB RAM (up to approx. 100 POs)		B								
CPU type										
• 2 × CPU 412-5H with SIMATIC S7 F Systems RT license (up to approx. 30 POs)			B							
Sync modules and cables										
• 2 × 2 sync modules for distances up to 10 m and 2 × FO sync cable, 1 m				3						
Interface to Industrial Ethernet plant bus										
• Without interface module					0					
• 2 × CP 443-1EX30 for redundant interface module[1]					3					
• 2 × 2 CP 443-1EX30 for 4-way connection[1]					4					
Racks										
• 1 × UR2-H (2 × 9 slots), aluminum							1			
• 1 × UR2-H (2 × 9 slots), steel							2			
• 2 × UR2 (9 slots), aluminum							3			
• 2 × UR2 (9 slots), steel							4			
Power supply (without backup batteries)										
• 2 × PS 407, 10 A for 120/230 V AC/DC								B		
• 2 × PS 407, 10 A for 120/230 V AC/DC, optional redundancy								C		
• 2 × PS 407, 20 A for 120/230 V AC/DC								D		
• 2 × 2 PS 407, 10 A for 120/230 V AC/DC (redundant)								E		
• 2 × PS 405, 10 A for 24 V DC								G		
• 2 × PS 405, 10 A for 24 V DC, optional redundancy								H		
• 2 × PS 405, 20 A for 24 V DC								J		
• 2 × 2 PS 405, 10 A for 24 V DC (redundant)								K		
Additive PROFIBUS DP interface modules										
• Without CP 443-5 Extended										0
• 2 × CP 443-5 Extended										1
• 2 × 2 CP 443-5 Extended[1]										2
• 2 × 3 CP 443-5 Extended[1]										3
• 2 × 4 CP 443-5 Extended[1]										4

[1] Up to 5 CPs can be plugged in per subsystem with a single power supply or up to 3 with a redundant power supply.

	Article No.									
AS 414FH (Redundant Station)	6ES7656-									
with SIMATIC PCS 7 AS Runtime license for 100 POs 2 × CPU each with 2 PROFIBUS interfaces (MPI/DP master and DP master) and 1 PN/IE interface (2-port switch) 2 × 4 MB work memory (2 MB each for program and data)	●	●	●	●	●	-	●	●	F	●
Type of delivery										
• Single components, not pre-assembled	7									
• Pre-assembled and tested	8									

© Siemens AG 2024

Selection and ordering data (continued)

	Article No.									
Memory card										
• 2 × Memory Card 2 MB RAM (up to approx. 100 POs)		B								
• 2 × Memory Card 4 MB RAM (up to approx. 210 POs)		C								
CPU type										
• 2 × CPU 414-5H with SIMATIC S7 F Systems RT license (up to approx. 350 POs)			F							
Sync modules and cables										
• 2 × 2 sync modules for distances up to 10 m and 2 × FO sync cable, 1 m				3						
• 2 × 2 sync modules for up to 10 km and 2 × FO sync cable, 1 m, for testing				4						
Interface to Industrial Ethernet plant bus										
• Without interface module					0					
• 2 × CP 443-1EX30 for redundant interface module[1)]					3					
• 2 × 2 CP 443-1EX30 for 4-way connection[1)]					4					
Racks										
• 1 × UR2-H (2 × 9 slots), aluminum							1			
• 1 × UR2-H (2 × 9 slots), steel							2			
• 2 × UR2 (9 slots), aluminum							3			
• 2 × UR2 (9 slots), steel							4			
Power supply (without backup batteries)										
• 2 × PS 407, 10 A for 120/230 V AC/DC								B		
• 2 × PS 407, 10 A for 120/230 V AC/DC, optional redundancy								C		
• 2 × PS 407, 20 A for 120/230 V AC/DC								D		
• 2 × 2 PS 407, 10 A for 120/230 V AC/DC (redundant)								E		
• 2 × PS 405, 10 A for 24 V DC								G		
• 2 × PS 405, 10 A for 24 V DC, optional redundancy								H		
• 2 × PS 405, 20 A for 24 V DC								J		
• 2 × 2 PS 405, 10 A for 24 V DC (redundant)								K		
Additive PROFIBUS DP interface modules										
• Without CP 443-5 Extended										0
• 2 × CP 443-5 Extended										1
• 2 × 2 CP 443-5 Extended[1)]										2
• 2 × 3 CP 443-5 Extended[1)]										3
• 2 × 4 CP 443-5 Extended[1)]										4

[1)] Up to 5 CPs can be plugged in per subsystem with a single power supply or up to 3 with a redundant power supply.

	Article No.									
AS 416FH (Redundancy Station)	6ES7656-									
with SIMATIC PCS 7 AS Runtime license for 100 POs 2 × CPU each with 2 PROFIBUS interfaces (MPI/DP master and DP master) and 1 PN/IE interface (2-port switch) 2 × 16 MB work memory (6 MB each for program and 10 MB each for data)	●	●	●	●	●	-	●	●	F	●
Type of delivery										
• Single components, not pre-assembled	7									
• Pre-assembled and tested	8									
Memory card										
• 2 × Memory Card 4 MB RAM (up to approx. 210 POs)		C								
• 2 × Memory Card 8 MB RAM (up to approx. 800 POs)		D								
• 2 × Memory Card 16 MB RAM (up to approx. 2 100 POs)		E								
CPU type										
• 2 × CPU 416-5H with SIMATIC S7 F Systems RT license (up to approx. 1 200 POs)			Q							
Sync modules and cables										
• 2 × 2 sync modules for distances up to 10 m and 2 × FO sync cable, 1 m				3						
• 2 × 2 sync modules for up to 10 km and 2 × FO sync cable, 1 m, for testing				4						
Interface to Industrial Ethernet plant bus										
• Without interface module					0					
• 2 × CP 443-1EX30 for redundant interface module[1)]					3					

© Siemens AG 2024

Selection and ordering data (continued)

	Article No.									
• 2 × 2 CP 443-1EX30 for 4-way connection[1]					4					
Racks										
• 1 × UR2-H (2 × 9 slots), aluminum							1			
• 1 × UR2-H (2 × 9 slots), steel							2			
• 2 × UR2 (9 slots), aluminum							3			
• 2 × UR2 (9 slots), steel							4			
Power supply (without backup batteries)										
• 2 × PS 407, 10 A for 120/230 V AC/DC								B		
• 2 × PS 407, 10 A for 120/230 V AC/DC, optional redundancy								C		
• 2 × PS 407, 20 A for 120/230 V AC/DC								D		
• 2 × 2 PS 407, 10 A for 120/230 V AC/DC (redundant)								E		
• 2 × PS 405, 10 A for 24 V DC								G		
• 2 × PS 405, 10 A for 24 V DC, optional redundancy								H		
• 2 × PS 405, 20 A for 24 V DC								J		
• 2 × 2 PS 405, 10 A for 24 V DC (redundant)								K		
Additive PROFIBUS DP interface modules										
• Without CP 443-5 Extended										0
• 2 × CP 443-5 Extended										1
• 2 × 2 CP 443-5 Extended[1]										2
• 2 × 3 CP 443-5 Extended[1]										3
• 2 × 4 CP 443-5 Extended[1]										4

[1] Up to 5 CPs can be plugged in per subsystem with a single power supply or up to 3 with a redundant power supply.

	Article No.									
AS 417FH (Redundant Station)	6ES7656-									
with SIMATIC PCS 7 AS Runtime license for 100 POs 2 × CPU each with 2 PROFIBUS interfaces (MPI/DP master and DP master) and 1 PN/IE interface (2-port switch) 2 × 32 MB work memory (16 MB each for program and data)	●	●	●	●	●	-	●	●	F	●
Type of delivery										
• Single components, not pre-assembled	7									
• Pre-assembled and tested	8									
Memory card										
• 2 × Memory Card 4 MB RAM (up to approx. 210 POs)		C								
• 2 × Memory Card 8 MB RAM (up to approx. 800 POs)		D								
• 2 × Memory Card 16 MB RAM (up to approx. 2 100 POs)		E								
CPU type										
• 2 × CPU 417-5H with SIMATIC S7 F Systems RT license (up to approx. 2 000 POs)			N							
Sync modules and cables										
• 2 × 2 sync modules for distances up to 10 m and 2 × FO sync cable, 1 m				3						
• 2 × 2 sync modules for up to 10 km and 2 × FO sync cable, 1 m, for testing				4						
Interface to Industrial Ethernet plant bus										
• Without interface module					0					
• 2 × CP 443-1EX30 for redundant interface module[1]					3					
• 2 × 2 CP 443-1EX30 for 4-way connection[1]					4					
Racks										
• 1 × UR2-H (2 × 9 slots), aluminum							1			
• 1 × UR2-H (2 × 9 slots), steel							2			
• 2 × UR2 (9 slots), aluminum							3			
• 2 × UR2 (9 slots), steel							4			
Power supply (without backup batteries)										
• 2 × PS 407, 10 A for 120/230 V AC/DC								B		
• 2 × PS 407, 10 A for 120/230 V AC/DC, optional redundancy								C		

© Siemens AG 2024

Selection and ordering data (continued)

	Article No.								
• 2 × PS 407, 20 A for 120/230 V AC/DC							D		
• 2 × 2 PS 407, 10 A for 120/230 V AC/DC (redundant)							E		
• 2 × PS 405, 10 A for 24 V DC							G		
• 2 × PS 405, 10 A for 24 V DC, optional redundancy							H		
• 2 × PS 405, 20 A for 24 V DC							J		
• 2 × 2 PS 405, 10 A for 24 V DC (redundant)							K		
Additive PROFIBUS DP interface modules[1]									
• Without CP 443-5 Extended									0
• 2 × CP 443-5 Extended									1
• 2 × 2 CP 443-5 Extended[1]									2
• 2 × 3 CP 443-5 Extended[1]									3
• 2 × 4 CP 443-5 Extended[1]									4

[1] Up to 5 CPs can be plugged in per subsystem with a single power supply or up to 3 with a redundant power supply.

Single components of safety-related automation systems

Single components of safety-related automation systems	
Single components of the safety-related SIMATIC PCS 7 automation systems	
SIMATIC S7 F Systems RT License For processing safety-related user programs, for one AS 412F/FH, AS 414F/FH, AS 416F/FH or AS 417F/FH system	6ES7833-1CC00-6YX0
CPU 412-5H PN/DP 1 MB work memory (512 KB each for program and data) Module occupies 2 slots	6ES7412-5HK06-0AB0
CPU 414-5H PN/DP 4 MB work memory (2 MB each for program and data) Module occupies 2 slots	6ES7414-5HM06-0AB0
CPU 416-5H PN/DP 16 MB work memory (6 MB for program and 10 MB for data) Module occupies 2 slots	6ES7416-5HS06-0AB0
CPU 417-5H PN/DP 32 MB work memory (16 MB each for program and data) Module occupies 2 slots	6ES7417-5HT06-0AB0
Sync set For linking the two redundant CPU 412-5H, 414-5H, 416-5H or 417-5H; for distances up to	
• 10 m, consisting of 4 sync modules for up to 10 m and 2 FO sync cables, 1 m each	6ES7656-7XX30-0XE0
• 10 km, consisting of 4 sync modules for up to 10 km : please order fiber-optic sync cables (2 units) in the required length separately.	6ES7656-7XX40-0XE0
Sync module For connection of the two CPU 412-5H, 414-5H, 416-5H or 417-5H; 2 modules required for each CPU, for distances up to	
• 10 m	6ES7960-1AA06-0XA0
• 10 km	6ES7960-1AB06-0XA0

Single components of safety-related automation systems	
Sync cable (fiber-optic connecting cable) For connecting the two CPU 412-5H, 414-5H, 416-5H or 417-5H; each redundant automation system requires 2 cables	
• 1 m	6ES7960-1AA04-5AA0
• 2 m	6ES7960-1AA04-5BA0
• 10 m	6ES7960-1AA04-5KA0
Other lengths	On request
Memory card RAM	
• 1 MB	6ES7952-1AK00-0AA0
• 2 MB	6ES7952-1AL00-0AA0
• 4 MB	6ES7952-1AM00-0AA0
• 8 MB	6ES7952-1AP00-0AA0
• 16 MB	6ES7952-1AS00-0AA0
• 64 MB	6ES7952-1AY00-0AA0
Memory Card Flash EPROM Only required to update firmware; alternative: firmware update via the engineering system	
• 16 MB	6ES7952-1KS00-0AA0
CP 443-1 Communications module for connecting SIMATIC S7-400 to Industrial Ethernet via TCP/IP, ISO and UDP; PROFINET IO controller, MRP; integrated real-time switch ERTEC with two ports; 2 × RJ45 interface; S7 communication, open communication (SEND/RECEIVE) with FETCH/WRITE, with or without RFC 1006, DHCP, SNMP V2, diagnostics, multicast, access protection via IP access list, initialization via LAN 10/100 Mbps; with electronic manual on DVD	6GK7443-1EX30-0XE0
CP 443-5 Extended Communications module for connection of SIMATIC S7-400 to PROFIBUS as DP master or for S7 communication, for increasing the number of DP lines, for data record routing with SIMATIC PDM and for 10 ms time stamping, electronic manual on CD; module occupies 1 slot	6GK7443-5DX05-0XE0

© Siemens AG 2024

Selection and ordering data (continued)

Single components of safety-related automation systems	
PS 407 power supply module with battery compartment for 2 backup batteries, module occupies 2 slots	
• **10 A** 120/230 V AC/DC; 5 V DC/10 A, 24 V DC/1 A	6ES7407-0KA02-0AA0
• **10 A, optional redundancy** 120/230 V AC/DC; 5 V DC/10 A, 24 V DC/1 A	6ES7407-0KR02-0AA0
• **20 A** 120/230 V AC/DC; 5 V DC/20 A, 24 V DC/1 A	6ES7407-0RA02-0AA0
PS 405 power supply module with battery compartment for 2 backup batteries, module occupies 2 slots	
• **10 A** 24 V DC; 5 V DC/10 A, 24 V DC/1 A	6ES7405-0KA02-0AA0
• **10 A, optional redundancy** 24 V DC; 5 V DC/10 A, 24 V DC/1 A	6ES7405-0KR02-0AA0
• **20 A** 24 V DC; 5 V DC/20 A, 24 V DC/1 A	6ES7405-0RA02-0AA0

Single components of safety-related automation systems	
Backup battery Type AA, 2.3 Ah	6ES7971-0BA00
Aluminum rack	
• UR1, 18 slots	6ES7400-1TA11-0AA0
• UR2, 9 slots	6ES7400-1JA11-0AA0
• UR2-H, for divided central controllers; 2 × 9 slots	6ES7400-2JA10-0AA0
Steel rack	
• UR1, 18 slots	6ES7400-1TA01-0AA0
• UR2, 9 slots	6ES7400-1JA01-0AA0
• UR2-H, for divided central controllers; 2 × 9 slots	6ES7400-2JA00-0AA0
Runtime licenses for SIMATIC PCS 7 automation systems (can be added to existing licenses)	See "Single components of standard automation systems"

© Siemens AG 2024

Overview

The SIMATIC PCS 7 automation systems are extremely rugged, both electrically and mechanically. For extreme ambient conditions, hardened and refined SIPLUS extreme products are another alternative, especially in the case of:

- High humidity
- Condensation
- Chemically, mechanically or biologically active materials

You can find an overview of the complete SIPLUS extreme product range online at:

http://www.siemens.com/siplus

Under "Devices for extreme requirements > Controllers > Advanced Controllers", you will find conversion tools that display the SIPLUS S7-400 articles for the corresponding SIMATIC S7-400 articles.

© Siemens AG 2024

14/3	**Introduction**
14/6	**Industrial Ethernet**
14/10	SCALANCE X switches product overview
14/13	SCALANCE XCM-100 unmanaged media converters
14/18	SCALANCE XB-000 switches
14/25	SCALANCE XC-100 switches
14/35	SCALANCE XB-200 switches
14/46	SCALANCE XC-200 switches
14/73	SCALANCE XC-200EEC switches
14/84	SCALANCE XP-200 switches
14/105	SCALANCE XF-200 switches
14/114	SCALANCE XF-200BA switches
14/125	SCALANCE X-200RNA switches
14/133	RUGGEDCOM compact switch RNA
14/133	RUGGEDCOM RSG900R managed
14/136	RUGGEDCOM rack switch
14/136	RUGGEDCOM RST2228 managed
14/140	SCALANCE XC-300 switches
14/151	SCALANCE XR-300 switches
14/167	SCALANCE XR-300 WG switches
14/180	SCALANCE XR-500 switches
14/210	Media modules for modular SCALANCE XR-500
14/216	Power supplies for SCALANCE XR-500
14/219	SCALANCE accessories
14/220	C-PLUG
14/222	KEY-PLUG
14/224	Plug-in transceivers for SCALANCE
14/233	Passive network components
14/234	FastConnect
14/239	Fiber-optic cables
14/241	System connection PCS 7 systems
14/245	Industrial Wireless LAN
14/256	**PROFINET**
14/259	Architecture
14/260	Switches for PROFINET
14/261	SCALANCE XF-200BA DNA switches (Y-switch)
14/270	IE/PB LINK
14/280	PROFINET Bus Analyzer (BANY)
14/284	**PROFIBUS**
14/285	PROFIBUS DP
14/287	Electrical networks
14/290	Optical networks
14/292	AS connection
14/293	Y-Link
14/294	PROFIBUS PA
14/296	Gateways to PROFINET
14/303	Gateway to PROFIBUS DP
14/307	Active field distributors for PA components
14/312	Passive PA components
14/314	**FOUNDATION Fieldbus H1**
14/317	FF gateways

14/320	Active field distributors for FF components
14/324	Passive FF components
14/325	**OpenPCS 7**
14/327	**Other communication**
14/328	AS-Interface
14/330	Modbus
14/330	CP 341 communications module

© Siemens AG 2024

Overview

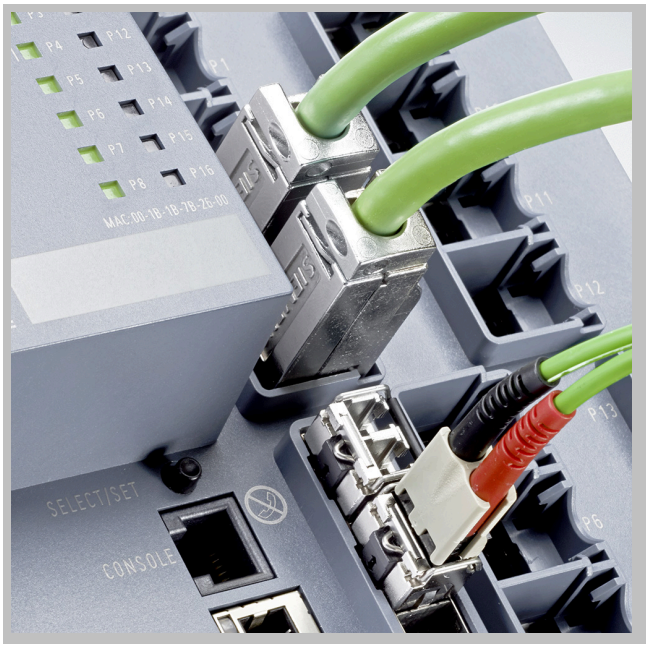

With the SIMATIC NET network components based on globally established standards, SIMATIC PCS 7 possesses a powerful and rugged range of products for implementing totally integrated communication networks for reliable data exchange between all system components and levels in a plant.

The SIMATIC NET products specially developed for industrial applications provide optimum suitability for plants in all sectors. They are matched to one another, and meet the highest industrial demands, especially in areas subject to extreme influences, such as:

- Extended temperature range
- Vibration
- High mechanical stress

The SIMATIC NET products guarantee expandability and the protection of investments as a result of compatible further developments, as well as uniformity from inbound logistics to outbound logistics and from field devices up to the Manufacturing Execution System (MES).

© Siemens AG 2024

Design

Incorporated in Totally Integrated Automation, the unique basis offered by Siemens for uniform automation of all sectors in the production, process or hybrid industries, the SIMATIC NET portfolio ensures fast and reliable communication between the individual systems/applications of the SIMATIC PCS 7 process control system such as:

- Automation systems, distributed I/O and field components
- Engineering system, operator system and maintenance station
- SIMATIC BATCH and SIMATIC Route Control
- Web clients and web servers for operator control and monitoring via Internet/Intranet as well as IT applications

Industrial Ethernet plant bus

Industrial Ethernet is used as the plant bus as well as terminal bus for multi-user systems with client/server architecture. For small systems, the "Basic Communication Ethernet" (BCE) integrated in the SIMATIC PCS 7 Industrial Workstations permits operation of single stations and servers on the plant bus even without a CP 1623/CP 1628 communications module.

In medium and large plants with high requirements, SIMATIC PCS 7 applies modern FastEthernet and Gigabit technology that combines the high availability provided by redundant electrical and optical rings with the scalable performance provided by switching technology and high transmission rates of up to 10 Gbps.

PROFINET

PROFINET is based on the international standards IEC 61158 and IEC 61784 and combines the advantages of the open network standard, Ethernet, and the PROFIBUS fieldbus system. It stands for maximum transparency, open IT communication, network security and real-time communication down to the field level. This makes PROFINET the basis for uniform automation network in the plant, into which existing fieldbuses implemented with PROFIBUS can be easily integrated.

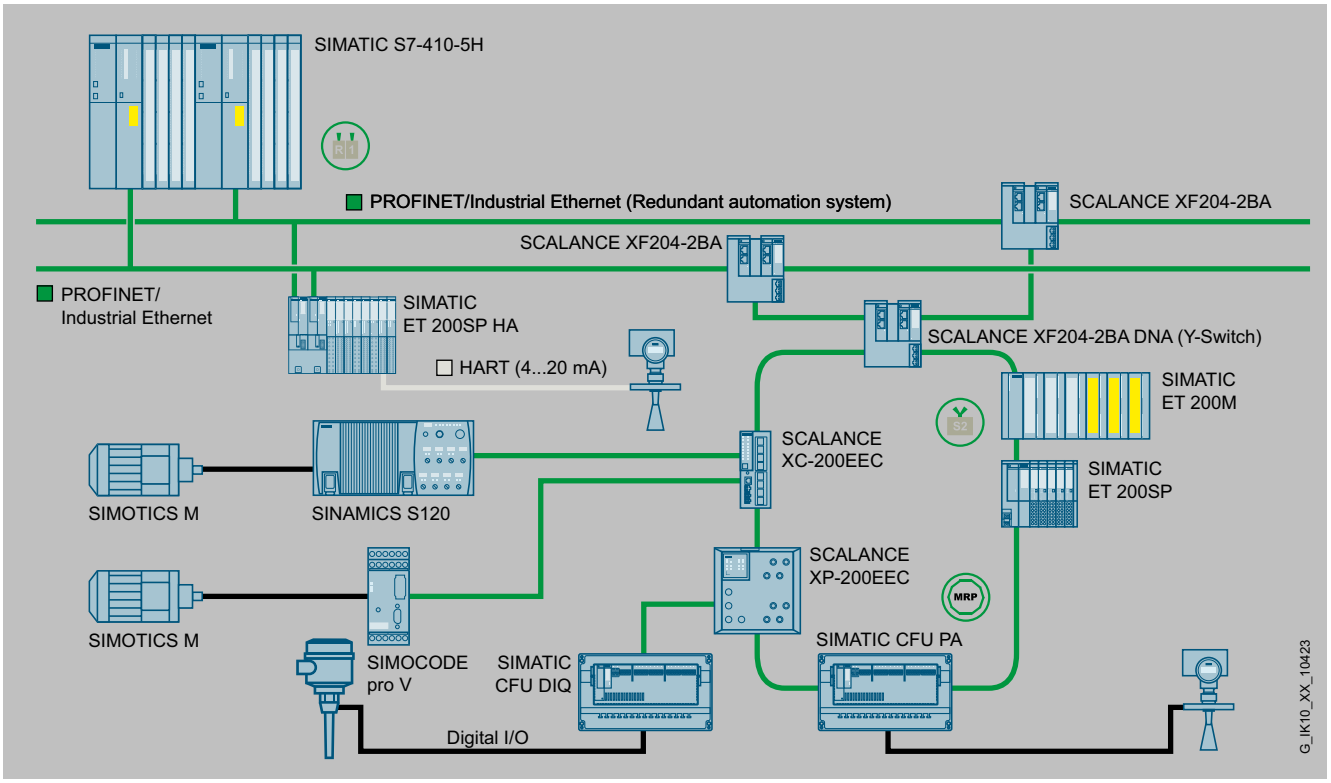

Example of PROFINET communication in the SIMATIC PCS 7 process control system

In the context of the SIMATIC PCS 7 process control system, PROFINET mainly focuses on communication between the automation systems (controllers) and the process I/O.

Fieldbus systems

PROFIBUS has become established as sturdy and reliable communications medium for connecting intelligent distributed I/O devices, transmitters and actuators to the controller level of the SIMATIC PCS 7 process control system. The universal, open fieldbus corresponds to the international standards IEC 61158 and IEC 61784.

© Siemens AG 2024

Design (continued)

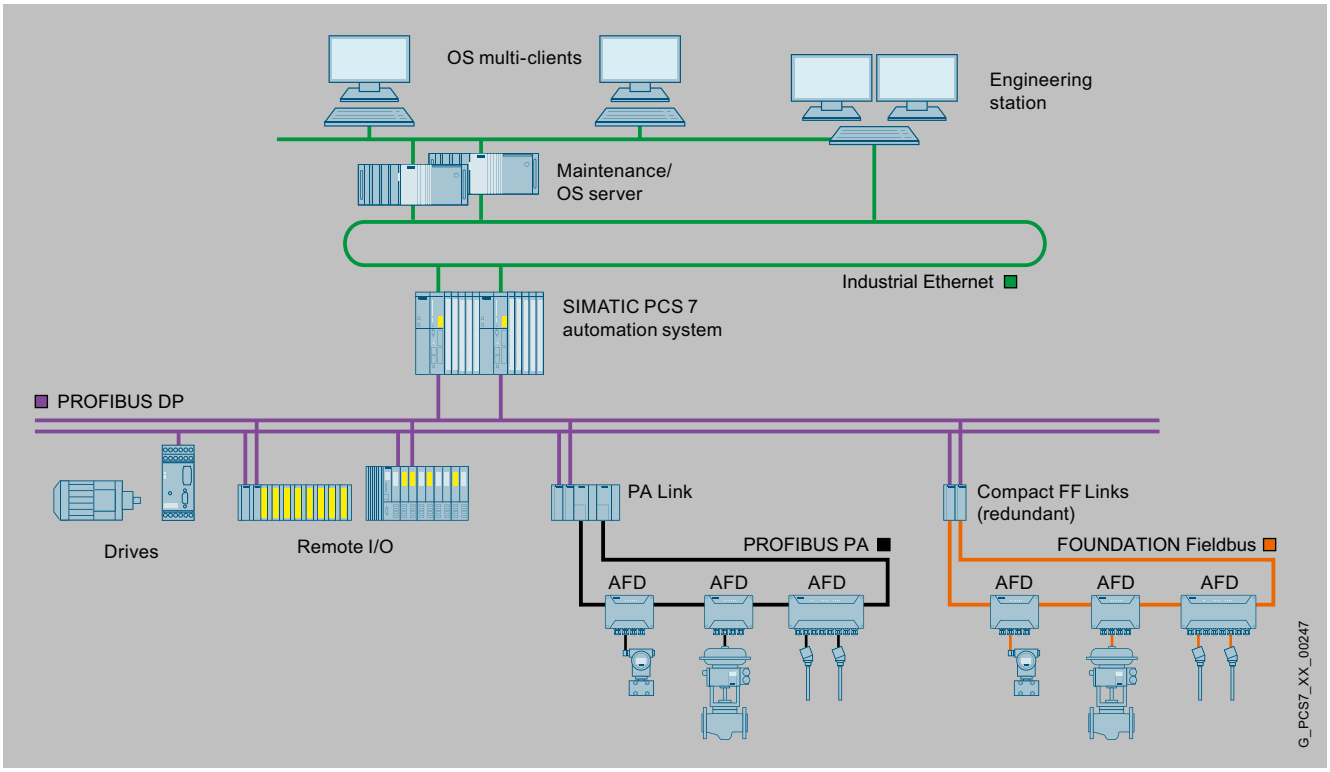

Integration of PROFIBUS PA and FOUNDATION Fieldbus H1

PROFIBUS DP

PROFIBUS DP is both a system bus and an open communication system, and is designed for moderate transmission rates and short response times. It is therefore optimally suitable for the control of the following devices:

- Directly connected field devices, e.g. drives, motor starters, analyzers, process controllers, or panels
- Distributed I/O devices such as the SIMATIC ET 200M, SIMATIC ET 200iSP and SIMATIC ET 200pro remote I/O stations
- Transmitters and actuators on a seamlessly integrated PROFIBUS PA fieldbus or FOUNDATION Fieldbus H1

Since it also supports the transmission of the HART protocol, HART field devices can also be integrated in a PROFIBUS DP communication network.

PROFIBUS PA and FOUNDATION Fieldbus H1

In addition to the direct connection of transmitters and actuators including power supply via the communication medium, the high information content of the communication as well as the diagnostic options are also of importance for the automation of industrial processes that frequently take place in corrosive, harmful, and hazardous environments.

Both the PROFIBUS PA fieldbus and the FOUNDATION Fieldbus H1 meet these requirements. Both are optimally suitable for directly integrating actuators and sensors in operating environments up to Ex zone 1/21 or 0/20 into the process system.

Their physical bus characteristics are based on the MBP transmission technology (Manchester Coded; Bus Powered) and are largely identical according to IEC 61158. Both fieldbuses can be integrated seamlessly in the SIMATIC PCS 7 process control system using PROFIBUS DP as link.

PROFIBUS PA and FOUNDATION Fieldbus H1 thus profit equally from the higher-level PROFIBUS architecture.

© Siemens AG 2024

Overview

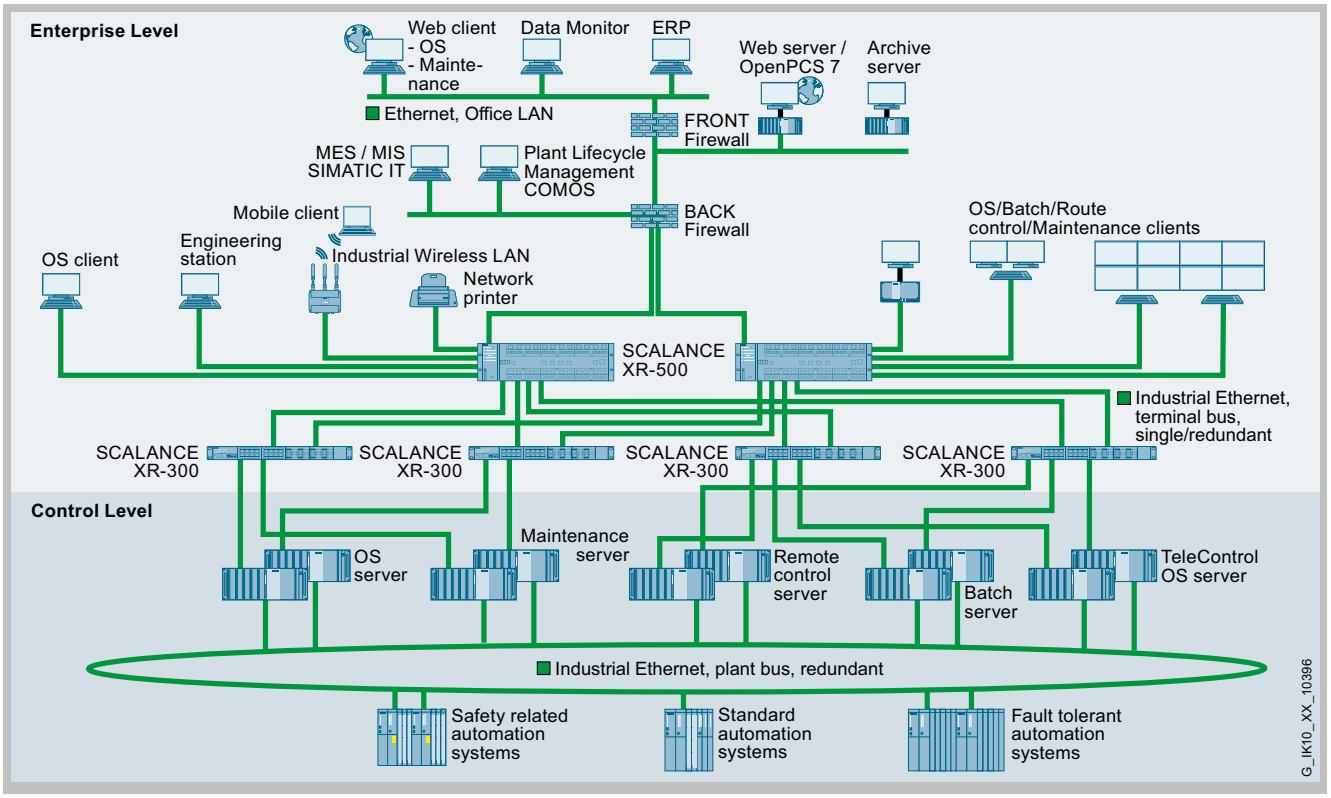

Typical configuration example for redundant plant bus

The plant bus and the terminal bus for multi-user systems with client/server architecture are implemented with Industrial Ethernet, a powerful area and cell network for industrial applications in line with the international IEEE 802.3 standard (Ethernet). Bus structures with optical rings are particularly suitable for this because of their interference immunity and high availability.

In medium-sized and large plants with high requirements, SIMATIC PCS 7 relies on modern FastEthernet and Gigabit technology. This combines the high reliability of optical rings with the scalable performance of switching technology and high transmission rates of up to 10 Gbps.

© Siemens AG 2024

Benefits

Ethernet is now the number 1 network technology in the global LAN environment. Ethernet offers important characteristics that can give you significant advantages for your application:

- Fast commissioning through simple connections
- High flexibility since existing networks can be extended without any adverse effects
- High availability thanks to redundant network topologies
- Almost unlimited communications performance because scalable performance is available through switching technology if required
- Networking of different application areas (e.g. office and production)
- Investment security through continuous compatible further development
- Plant-wide clock system permits exact assignment of events within the entire system

Ethernet technology for industrial environments

With Industrial Ethernet, SIMATIC NET expands Ethernet technology with future-proof network components with special features and capabilities for use in industrial environments, for example:

- Rugged design, suitable for harsh industrial environments
- Fast local assembly using the FastConnect cabling system
- High fault tolerance due to redundancy and fast redundancy switchover, from bumpless redundancy through PRP and HSR to ring redundancy with MRP
- Continuous and central monitoring of network components with a simple yet effective signaling concept, and network management software

© Siemens AG 2024

Design

The following Ethernet communications interfaces are used in the various SIMATIC PCS 7 subsystems (ES, OS, AS etc.):

- Interface modules integrated onboard
- Simple network adapters
- Special communications modules, e.g. CP 1623 and CP 1628

They are defined when selecting the respective system components, depending on the requirements. You can find more information in the section "System connection of PCS 7 systems".

The communication stations can be integrated in the terminal bus and the plant bus using Industrial Ethernet switches of the SCALANCE X product family. These switches offer scalable performance at an attractive price and support a wide variety of configuration options.

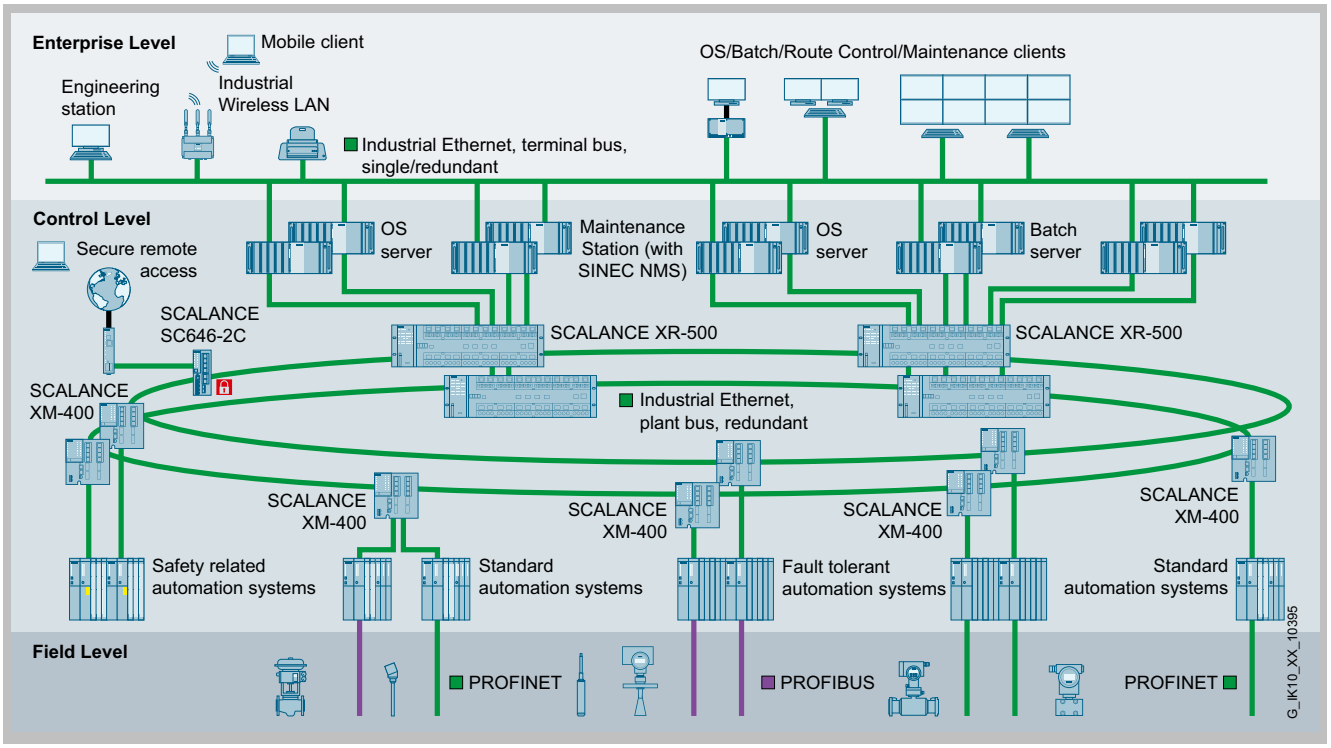

Configuration example for plant and terminal bus

Terminal bus

Client-server and server-server communication is carried out on a dedicated Ethernet LAN. The communication network identified as a terminal bus can be implemented with standard SIMATIC NET components such as Industrial Ethernet switches, onboard interface modules, network adapters, communications processors (CP), cabling, etc.

A ring design avoids communication failures should the line become damaged or disconnected at a particular point. To further increase availability, it is also possible to distribute terminal bus communication over two redundant rings. Each PCS 7 station is connected to one of two Industrial Ethernet ports on each of the two separate rings. The SIMATIC NET SOFTNET-IE RNA communication software on the PCS 7 stations organizes communication processes based on the PRP. Non-PRP-enabled terminal devices that have only one Industrial Ethernet port can be integrated in the redundant terminal bus via SCALANCE X204RNA.

According to IEC 62439-3, the **Parallel Redundancy Protocol (PRP)** is based on double transmission of message frames over two separate networks (Ring 1, Ring 2). On the sender side, the SOFTNET-IE RNA software or SCALANCE X-200RNA network access point duplicates the message frame arriving from the sender and feeds one message frame to Ring 1 and the other to Ring 2. On the receiver side, the software or network access point forwards the first incoming message frame to the recipient. The second message frame from the second LAN is discarded. Transmission of the message frame is thus always ensured without delay if an error occurs.

Industrial Ethernet plant bus

The automation systems (AS) communicate with one another and with the engineering system and Operator Systems (Servers/Single Stations) over the Industrial Ethernet plant bus. This can be configured in a similar way to the terminal bus, using SIMATIC NET standard components such as Industrial Ethernet switches, network adapters, communications modules (CP), cabling, etc. For small plants with up to 8 standard automation systems per Operator System, Single Stations and servers can be efficiently operated on the plant bus using "Basic Communication Ethernet" (BCE) and a FastEthernet network adapter. The CP 1623/CP 1628 communications module is always required if more than 8 automation systems or redundant automation systems are used.

As far as availability is concerned, ring topologies are always the first choice for the plant bus. With particularly high availability requirements, the plant bus can also be configured as a redundant double ring (two CPs per AS CPU and OS server). Double faults such as a switch failure on ring 1 with a simultaneous interruption in the bus cable on ring 2 can then be tolerated. The two rings in such a configuration are physically separated. The coupling partners are linked together logically when configuring with NetPro over a high-availability S7 connection (4-way redundancy). One switch each

© Siemens AG 2024

Design (continued)

takes over the function of the redundancy manager for each ring. The current switches of the SCALANCE X-500, X-400, X-300 and X-200 product lines can act as redundancy manager in a ring.

Note:

Detailed information on Industrial Ethernet and network components can be found in Catalog IK PI, in the Industry Mall, or in Catalog CA 01 under "Industrial Communication".

© Siemens AG 2024

Overview

Managed Industrial Ethernet switches

Layer 2 Industrial Ethernet switches from Siemens include:

- Compact Switch Modules (CSMs)
- SCALANCE X Industrial Ethernet switches
- RUGGEDCOM Ethernet switches
- Communications processors (CP) with integral switch

Compact Switch Modules (CSMs)

Unmanaged switches for use directly on the SIMATIC for interface expansion and integration of machines into existing plant networks.

SCALANCE X-000 unmanaged

Unmanaged switches with electrical and/or optical ports for designing small networks for machine or plant islands with 10/100/1000 Mbps. In addition, 24 V AC variants are available for use in building automation.

SCALANCE X-100 unmanaged

Switches with electrical and/or optical ports, redundant power supply, and signaling contact for use in machine-level applications. In addition, 24 V AC variants for use in building automation and devices in 19" rack design are available.

SCALANCE X-200 managed

For universal use, from machine-level applications to networked subsystems with data transfer rates up to 1 000 Mbps. Configuration and remote diagnostics are integrated into the STEP 7/TIA Portal engineering tool. This increases plant availability. Devices with a high degree of protection facilitate cabinet-free setup.

Corresponding switches are also available for use in subsystem networks with hard real-time requirements (Isochronous Real Time – IRT) and in H systems with maximum availability with S2 diagnostics, CiR/H-CiR and H-Sync. Versions with SFP plug-in transceivers are available to allow a choice between electrical and optical ports.

In addition, variants are offered for various applications – in the form of SIMATIC ET 200S, ET 200SP or S7-1500 also for cabinet-free assembly.

SCALANCE X-300 managed

Networking of subsystems/plant areas, as well as connection to the shopfloor. The SCALANCE X-300 managed product line combines the firmware functionality of the SCALANCE X-400 line with the compact design of the SCALANCE X-200 line. This means the SCALANCE X-300 switches have extended management functions and an extended firmware functionality compared to the SCALANCE X-200 switches. Devices in the 19" rack design are also available, both as fully or partially modular devices and as so-called work group switches.

SCALANCE XM-400 managed (layer 3)

For flexible networking and structuring of high-performance plant networks. Thanks to the modular design, the switches can be adapted to the respective task. Using Port Extenders, the switches can be upgraded to up to 24x 10/100/1000 Mbps ports, of which up to 8x ports can supply data and power to terminal devices with Power over Ethernet capability. In addition, SFP plug-in transceivers allow the XM-400 devices to be equipped with single-mode and/or multimode SFPs at 100 Mbps and/or 1 000 Mbps.

Optional routing functions on layer 3 permit communication between different IP subnetworks.

SCALANCE XR-500 managed (Layer 3)

For networking and structuring high-performance industrial networks and for connecting office networks to automation networks. As a Layer 3 switch, SCALANCE XR-500 is extremely well suited to use as a central component in backbone networks, e.g. when a high number of ports is required, at extremely high transfer rates (10 Gigabit Ethernet), or for redundant connection to an office infrastructure. The rack switches are especially designed for use in 19" control cabinets. The modular variants feature versatile plug-in 4-port media modules (electrical and optical) which can adapt to the respective requirements.

Optional routing functions on layer 3 permit communication between different IP subnetworks.

RUGGEDCOM Ethernet switches

Compact, modular managed switches available in both top hat DIN rail and rack variants. RUGGEDCOM switches are mainly intended for use in the power supply field, where the devices are able to work reliably in the electrically hostile and climatically demanding environments present in substations and industrial plants.

Communications processors for SIMATIC with integral switch

Managed switches for adding Industrial Ethernet/PROFINET interfaces to the SIMATIC and for integrating the controllers into existing line or ring topologies.

Thanks to integral layer 3 functionality, the Advanced-CPs can also be used as routers between IP subnets.

Communications processors for PC with integral switch

Managed switches for adding Industrial Ethernet/PROFINET interfaces to industrial PCs and for integrating PCs into existing line topologies.

© Siemens AG 2024

Overview (continued)

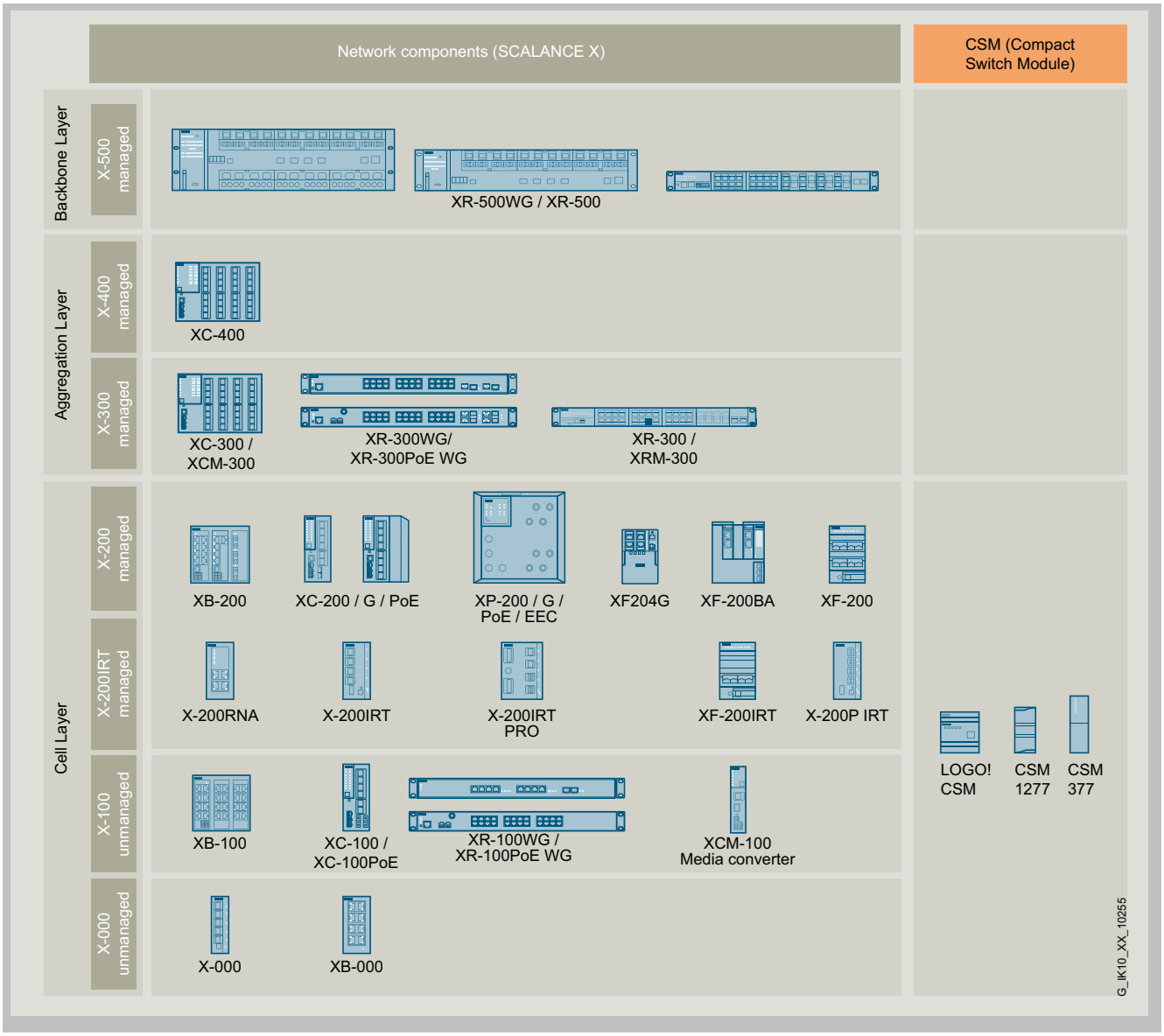

Portfolio overview of managed and unmanaged Layer 2 and Layer 3 Industrial Ethernet switches

© Siemens AG 2024

Overview (continued)

	Areas of application / Type of networks / Requires	Office connection	Plant networking	Industry-related applications	Process automation	Power generation and distribution	Wind farms	Machinery and plant engineering	Unit networking	Standard mechanical engineering	Machine-internal networking	Network setup through SIMATIC S7-300, S7-1200 or LOGO!
X-500	Powerful backbone network with very high requirements on functionality / port density / availability as well as interface to Office IT	●	●	●								
X-400	Powerful plant network with high demand on functionality and availability	●	●	●								
X-300	Large networks with high demand on functionality and availability		●	●		●	●					
X-200	Networks with high demand on functionality and availability		●	●	●	●	●	●	●	●		
X-100	Networks with low demand on functionality						●	●	●	●		
X-000	Networks with low demand on functionality and ruggedness									●	●	
CSM	Networks or interface extension for SIMATIC S7-300, S7-1200, LOGO!											●

● applies to selected versions

G_IK10_XX_10301

SCALANCE X Industrial Ethernet switches: Areas of application

	Layer 3 / Routing	19" design	Modular through media modules	Support of Gigabit Ethernet	Support of 10 Gbit/s	PROFINET	EtherNet/IP	Office features (VLAN)	Diagnostic functions	Isochronous Real-Time (IRT)	Power over Ethernet	Can be used under enhanced ambient conditions	Time synchronization to IEEE 1588	Additional interface for SIMATIC S7-300/ ET 200M, S7-1200 or LOGO!
X-500	●	●	●	●	●	●	●	●	●				●	
X-400	●		●	●		●	●	●	●		●			
X-300		●	●	●	●	●		●	●		●	●	●	
X-200				●	●	●	●	●	●	●	●	●		
X-100		●		●	●						●			
X-000				●								●		
CSM														●

● applies to selected versions

G_IK10_XX_10302

SCALANCE X Industrial Ethernet switches: Overview of functions

More information

Selection tool:

To support the selection of SCALANCE network components, the TIA selection tool is available at:

www.siemens.com/tst

© Siemens AG 2024

Overview

The unmanaged SCALANCE XCM-100 Industrial Ethernet media converters of the SCALANCE X-100 product line are ideally suited to converting electrical signals into optical signals in Industrial Ethernet networks at transfer rates of 100/1000 Mbps in line and star topologies.

- Electrical or optical connection to stations or networks according to port characteristics of the devices
- Rugged industrial enclosure for space-saving control cabinet installation on standard DIN rails, SIMATIC S7-300 DIN rails, or for wall mounting
- Rugged station connections with industry-standard RJ45 plug-in connectors with securing collar that offers additional strain and bending strain relief thanks to latching on the enclosure
- Redundant power supply
- Diagnostics on the device by means of LEDs (power, link status, data communication)
- Fault signaling contact

Product variants

SCALANCE XCM102

- For converting electrical signals into optical signals in Industrial Ethernet line, star and ring topologies
- The new Industrial Ethernet media converter has an electrical 100/1000 Mbps RJ45 port and an SFP transceiver connector
- Redundant power supply with 2 x 24 V DC
- Device diagnostics using LEDs (power, link status, data traffic) and signaling contact (signal mask can be set using a button on the device)
- The electric RJ45 port is industry standard and features an additional securing collar for optimal connection of the IE FC RJ45 plugs

Benefits

get Designed for Industry

- Ideal solution for converting electrical signals into optical signals in Industrial Ethernet line, star and ring topologies
- Space-saving installation in the cabinet thanks to compact design in SIMATIC S7-300 format
- Reliable plug-in connection thanks to rugged device connection with industry-standard FastConnect plugs
- Cost savings, since installation is possible without a patch field by means of IE FC RJ45 plugs and IE FC standard cables

Application

The unmanaged media converters of the SCALANCE XCM-100 product line permit low-cost conversion of electrical signals into optical signals in Industrial Ethernet line, star and ring topologies. They are designed for use in the control cabinet.

Single, remote terminal devices or network segments can be linked via the optical path of the SCALANCE XCM-100 media converters. Integration of an optical path into a redundant ring is also possible, as well as installation of the SCALANCE XCM-100 media converters into a standby link.

Design

The Industrial Ethernet media converters with a rugged metal enclosure are optimized for mounting on a DIN rail and a SIMATIC S7-300 DIN rail. Direct wall mounting in various positions is also possible. Thanks to the dimensions of the enclosure that correspond to those of the SIMATIC S7-300, the devices are ideally suited for integration in an automation solution with SIMATIC S7-300 components.

The SCALANCE XCM102 media converters feature:

- 2x 3-pin terminal block for connecting the redundant supply voltage (2 x 24 V DC/AC)
- An LED display for status information (power, link status, data communication, signaling contact)
- A 2-pin terminal block for connecting the floating signaling contact
- A SET button for on-site configuration of the signaling contact
- 1x SFP connector to select between single-mode and multimode and between the data transfer rate of 100 Mbps or 1000 Mbps, depending on which SFP transceiver is used

© Siemens AG 2024

Function

- Setup of electrical and optical Industrial Ethernet line, star and ring topologies
- Uncrossed connecting cables can be used due to autocrossover function integrated in the TP ports
- Easy configuration and extension of the network;
  no limits to network extension when switches or media converters of the SCALANCE XCM-100 family are cascaded.

Network topology and network configuration

The SCALANCE XCM-100 media converters are typically accommodated in one control cabinet together with the nodes to be connected. They can be installed in line, star and ring topologies.

When configuring the network, it is necessary to observe the following boundary conditions:

- Length of the TP cable between two SCALANCE X media converters:
  - Max. 100 m with Industrial Ethernet FastConnect products
- Length of the optical cables:
  - Max. 5 km with Industrial Ethernet multimode fiber-optic cables
  - Max. 26 km with Industrial Ethernet single-mode fiber-optic cables

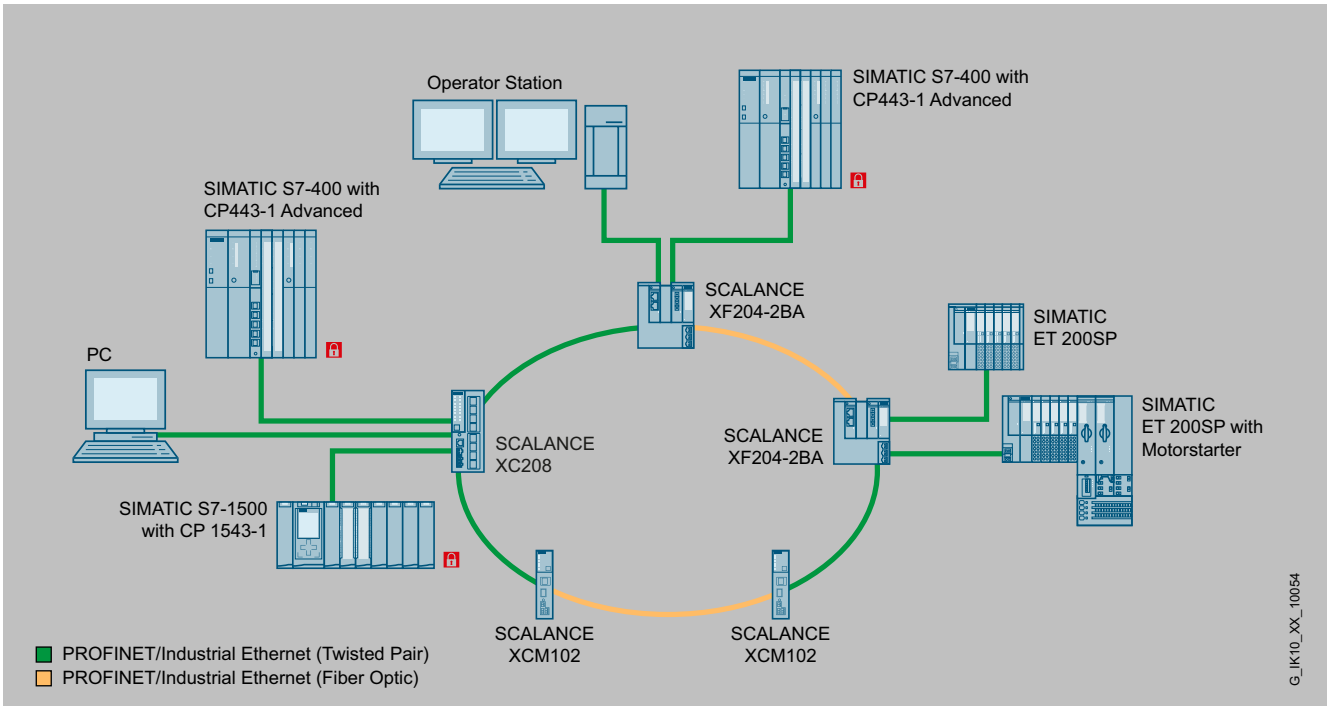

Mixed ring topology with twisted pair and fiber-optic cables

© Siemens AG 2024

Function (continued)

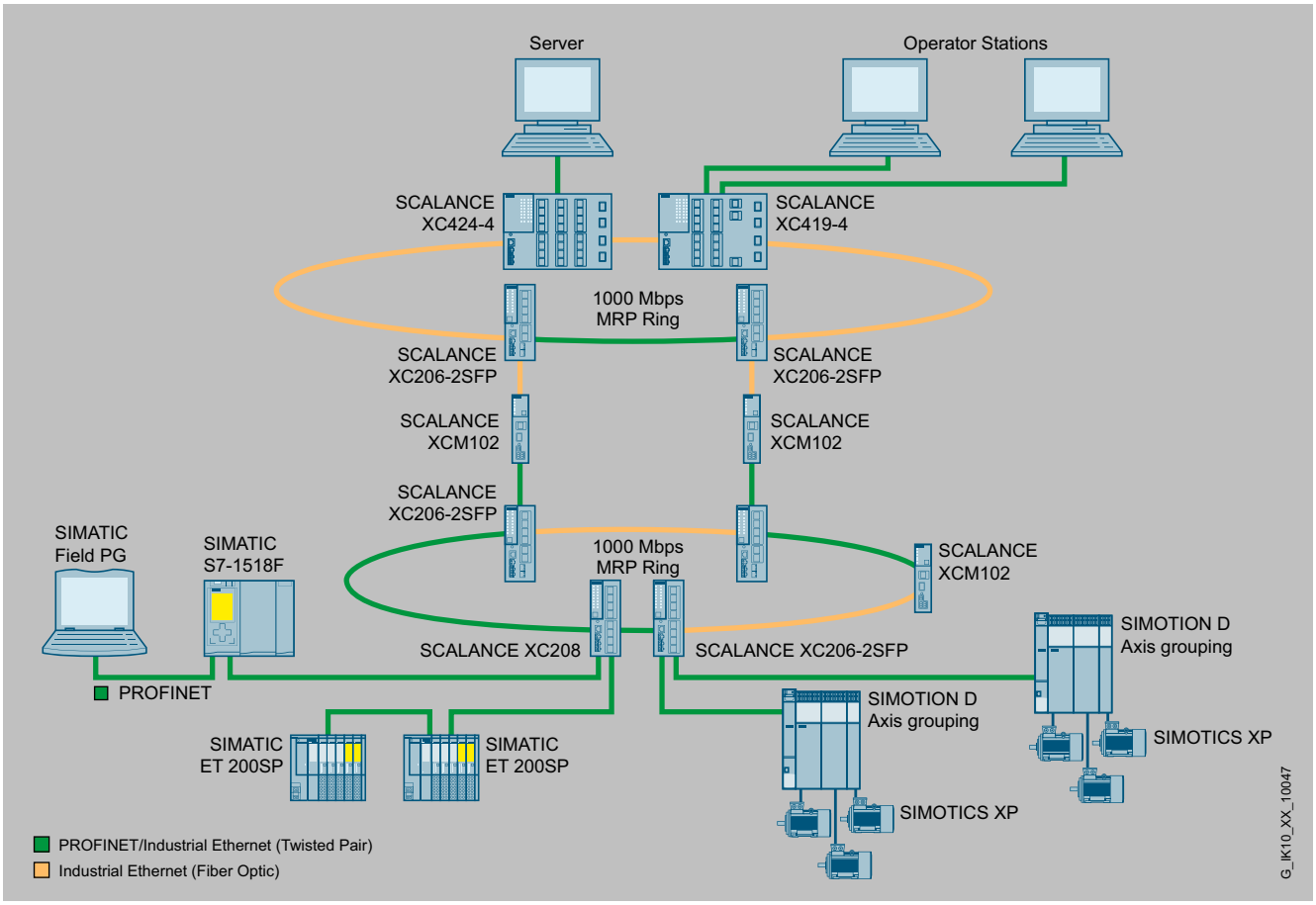

Optical redundant coupling of two optical rings with SCALANCE XCM102

Diagnostics

The following information is displayed on site by LEDs:

- Power
- Port status
- Data traffic

The Industrial Ethernet media converters of the SCALANCE XCM-100 product line can also be monitored using the floating signaling contact. Two media converters of the same type can be connected in cascading mode.

Selection and ordering data

	Article No.
SCALANCE XCM-100 unmanaged media converters Unmanaged Industrial Ethernet media converter for converting electrical signals to optical signals, SET button for on-site configuration of the signaling contact, 2x 3-pin terminal block for connecting the redundant supply voltage (2 x 24 V DC/AC)	
• **SCALANCE XCM102** 1 x 100/1000 Mbps RJ45 port 1 x SFP transceiver connector	**6GK5102-1GS00-2AC2**

© Siemens AG 2024

Accessories

	Article No.
SITOP compact 24 V/0.6 A 1-phase power supply with wide-range input 85 – 264 V AC/110 – 300 V DC, stabilized output voltage 24 V, rated output current value 0.6 A, slim design	6EP1331-5BA00
IE FC stripping tool Pre-adjusted stripping tool for fast stripping of Industrial Ethernet FC cables	6GK1901-1GA00
IE FC RJ45 plug 180 2 x 2 RJ45 plug-in connector for Industrial Ethernet with a rugged metal enclosure and integrated insulation displacement contacts for connecting Industrial Ethernet FC installation cables; 180° cable outlet; for network components and CPs/CPUs with Industrial Ethernet interface	
• 1 pack = 1 unit	6GK1901-1BB10-2AA0
IE FC TP standard cable GP 2 x 2 (type A) 4-core, shielded TP installation cable for connection to IE FC RJ45 outlet/IE FC RJ45 plug; PROFINET-compatible; with UL approval; sold by the meter; max. delivery unit 1000 m, minimum order quantity 20 m	6XV1840-2AH10
IE TP cord RJ45/RJ45 TP cable 4 x 2 with 2 RJ45 plugs	
• 1 m	6XV1870-3QH10
• 2 m	6XV1870-3QH20
• 10 m	6XV1870-3QN10
FC FO termination kit Assembly case for on-site assembly of FC SC and FC BFOC connectors on FC FO standard cable, comprising a stripping tool, Kevlar cutters, fiber breaking tool and microscope	6GK1900-1GL00-0AA0
FC BFOC plug Screw connector for on-site assembly on FC fiber-optic cable; (1 pack = 20 units + cleaning cloths)	6GK1900-1GB00-0AC0
FC FO standard cable GP 62.5/200/230 FC FO standard cable for fixed routing indoors with PVC sheath; sold by the meter; max. delivery unit 1000 m; minimum order quantity 20 m	6XV1847-2A
Multimode FO BFOC connector set For FO standard cable (50/125/1400), FO ground cable (50/125/1400), flexible FO trailing cable, indoor FO cable (62.5/125/900), 20 units	6GK1901-0DA20-0AA0
Standard cable GP (50/125/1400/OM2++) segmentable [2)] Multimode cable, sold by the meter; max. delivery unit 1000 m; minimum order quantity 20 m	6XV1873-2A
MM FO cord SC/BFOC With one SC duplex connector and two BFOC connectors, 1 m	6XV1843-5EH10-0CB0

Accessories (continued)

	Article No.
SM FO cord SC/BFOC With one SC duplex connector and two BFOC connectors, 1 m	6XV1843-5FH10-0CB0
Screw-type terminal block For SCALANCE X/W/S	
• 2-pin for signaling contact (24 V DC) 1 pack = 5 units	6GK5980-0BB00-0AA5
• 4-pin for power supply (24 V DC) 1 pack = 5 units	6GK5980-1DB00-0AA5

© Siemens AG 2024

Technical specifications

Article number	6GK5102-1GS00-2AC2
transfer rate	
transfer rate	100 Mbit/s, 1 000 Mbit/s
interfaces	
number of electrical/optical connections for network components or terminal equipment maximum	2
number of electrical connections	
• for network components or terminal equipment	1
• for SFP plug-in	1; 100 Mbps and 1000 Mbps SFP plug-in transceiver usable
• for signaling contact	1
• for power supply	1
• for redundant voltage supply	1
type of electrical connection	
• for network components or terminal equipment	RJ45 port
• for signaling contact	2-pole terminal block
• for power supply	2x 3-pole terminal block
signal inputs/outputs	
operating voltage of the signaling contacts	
• at DC rated value	24 V
operational current of the signaling contacts	
• at DC maximum	0.1 A
supply voltage, current consumption, power loss	
supply voltage 1 rated value	24 V
• type of voltage 1 of the supply voltage	DC
• consumed current 1 at rated supply voltage maximum	0.15 A
• power loss [W] 1 rated value	2.5 W
supply voltage 2 rated value	24 V
• type of voltage 2 of the supply voltage	AC
• consumed current 2 at rated supply voltage maximum	0.3 A
• power loss [W] 2 rated value	5 W
product component fusing at power supply input	Yes
consumed current	
• maximum	dependent on the use of SFP plug-in transceiver
power loss [W]	
• maximum	dependent on the use of SFP plug-in transceiver
ambient conditions	
ambient temperature	
• during operation	-40 ... +70 °C
• during storage	-40 ... +85 °C
• during transport	-40 ... +85 °C
• note	max. operating temperature dependent on the use of SFP plug-in transceiver

Technical specifications (continued)

Article number	6GK5102-1GS00-2AC2
relative humidity at 25 °C without condensation during operation maximum	95 %
protection class IP	IP20
design, dimensions and weights	
design	Compact
width	35 mm
height	147 mm
depth	123 mm
net weight	0.22 kg
fastening method	
• 35 mm top hat DIN rail mounting	Yes
• S7-300 rail mounting	Yes
• S7-1500 rail mounting	Yes
• wall mounting	Yes
standards, specifications, approvals	
certificate of suitability	
• CE marking	Yes
Marine classification association	
• American Bureau of Shipping Europe Ltd. (ABS)	Yes
• Det Norske Veritas (DNV)	Yes
• Germanische Lloyd (GL)	Yes
• Lloyds Register of Shipping (LRS)	Yes
• Polski Rejestr Statkow (PRS)	Yes
• Royal Institution of Naval Architects (RINA)	Yes
• Chinese Classification Society (CCS)	Yes
MTBF	152 a
further information internet links	
internet link	
• to website: Selection guide for cables and connectors	https://support.industry.siemens.com/cs/ww/en/view/109766358
• to web page: selection aid TIA Selection Tool	https://www.siemens.com/tstcloud
• to website: Industrial communication	https://www.siemens.com/simatic-net
• to web page: SiePortal	https://sieportal.siemens.com/
• to website: Image database	https://www.automation.siemens.com/bilddb
• to website: CAx-Download-Manager	https://www.siemens.com/cax
• to website: Industry Online Support	https://support.industry.siemens.com

More information

Selection Tool:

To support the selection of SCALANCE network components, the TIA Selection Tool is available at:

www.siemens.com/tst

© Siemens AG 2024

Overview

The unmanaged Industrial Ethernet switches of the SCALANCE XB-000 line are ideal for setting up small Industrial Ethernet networks in line and star topologies. Their enclosures are suitable for space-saving installation in control cabinets or boxes on standard DIN rails.

Product variants

- SCALANCE XB005 and SCALANCE XB008
  5 or 8 x 10/100 Mbps RJ45 ports, electrical
- SCALANCE XB005G and SCALANCE XB008G (Gigabit)
  5 or 8 x 10/100/1000 Mbps RJ45 ports, electrical
- SCALANCE XB004-1
  4 x 10/100 Mbps RJ45 ports, electrical
  1 x 100 Mbps SC port, optical (multimode, glass), up to 5 km
- SCALANCE XB004-2
  4 x 10/100 Mbps RJ45 ports, electrical
  2 x 100 Mbps SC port, optical (multimode, glass), up to 5 km
- SCALANCE XB004-1LD (long distance)
  4 x 10/100 Mbps RJ45 ports, electrical
  1 x 100 Mbps SC port, optical (single-mode, glass), up to 26 km
- SCALANCE XB004-2LD (long distance)
  4 x 10/100 Mbps RJ45 ports, electrical
  2 x 100 Mbps SC port, optical (single-mode, glass), up to 26 km
- SCALANCE XB004-1G (Gigabit)
  4 x 10/100/1000 Mbps RJ45 ports, electrical
  1 x 1000 Mbps SC port, optical (multimode, glass), up to 750 m
- SCALANCE XB004-1LDG (long distance)
  4 x 10/100/1000 Mbps RJ45 ports, electrical
  1 x 1000 Mbps SC port, optical (single-mode, glass), up to 10 km

Benefits

get Designed for Industry

- Implementation of simple and very economical machine networking
- Space-saving installation thanks to small, compact design
- Can be used in industrial environments
- Fast commissioning without configuration
- Easy on-site diagnostics via LEDs
- Uncomplicated use of uncrossed connecting cables possible thanks to the integrated Autocrossover function
- Low-cost connection of especially remote nodes possible
- 24 V AC versions for use in building automation

Application

The unmanaged Industrial Ethernet switches of the SCALANCE XB-000 line enable cost-effective solutions for setting up small, electrical/optical star or line topologies with switching functionality in machines or plant units.

The enclosure is designed for space-saving installation in a control cabinet on a standard rail.

Design

The SCALANCE XB-000 Industrial Ethernet switches are optimized for mounting on a DIN rail. Wall mounting is possible.

The SCALANCE XB-000 switches feature:

- A 3-pin terminal block for connecting the supply voltage (1 x 24 V DC) and functional grounding
- An LED for indicating status information (power)
- LEDs for indicating status information (link status and data exchange) per port

The following port types are available:

- 10/100 BaseTX electrical RJ45 ports or 10/100/1000 BaseTX electrical RJ45 ports:
  automatic detection of data transmission rate (10 or 100 Mbps), with autosensing and autocrossing function for connecting IE TP cables up to 100 m.
- 100 BaseFX, optical SC port:
  for direct connection to Industrial Ethernet FO cables. Multimode FOC up to 5 km
- 100 BaseFX, optical SC port:
  for direct connection to Industrial Ethernet FO cables. Single-mode fiber-optic cable up to 26 km
- 1000 BaseSX, optical SC port:
  for direct connection to Industrial Ethernet FO cables. Multimode fiber-optic cable up to 750 m
- 1000 BaseLX, optical SC port:
  for direct connection to Industrial Ethernet FO cables. Single-mode fiber-optic cable up to 10 km

All connections for data cables are located at the front, and the connection for the power supply is at the bottom.

© Siemens AG 2024

Function

- Construction of electrical Industrial Ethernet line or star topologies
- Automatic data transmission rate detection (10/100/1000 Mbps), with autosensing and autocrossover function
- Easy network configuration and network expansion;
  no limitation on network expansion with cascading of the switches

Network topology and network configuration

The SCALANCE XB-000 switches are typically installed with the stations to be connected in a control cabinet or control box.

When configuring the network, it is necessary to observe the following boundary conditions:

- Length of the TP cable between two SCALANCE XB-000 switches:
  - max. 100 m
  - max. 10 m via patch cables with TP Cord
  - max. 100 m via Industrial Ethernet FC Outlet RJ45, IE FC Standard Cable and TP Cord
- Length of the fiber-optic cables:
  - max. 5 km with Industrial Ethernet FO cables
    Multimode
  - max. 26 km with Industrial Ethernet FO cables
    Single mode

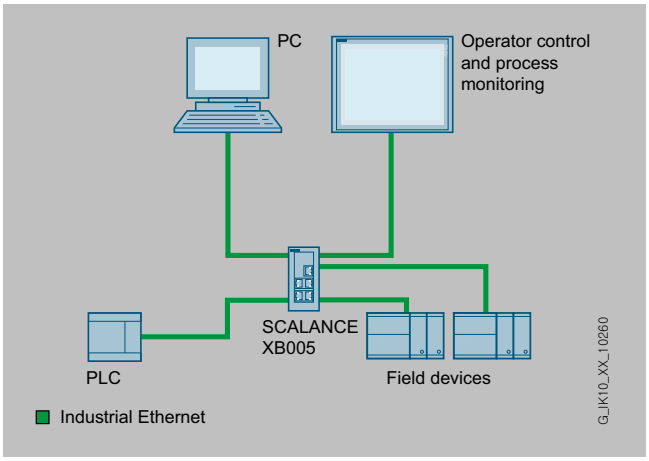

Electrical star topology with SCALANCE XB005 or SCALANCE XB005G

Function (continued)

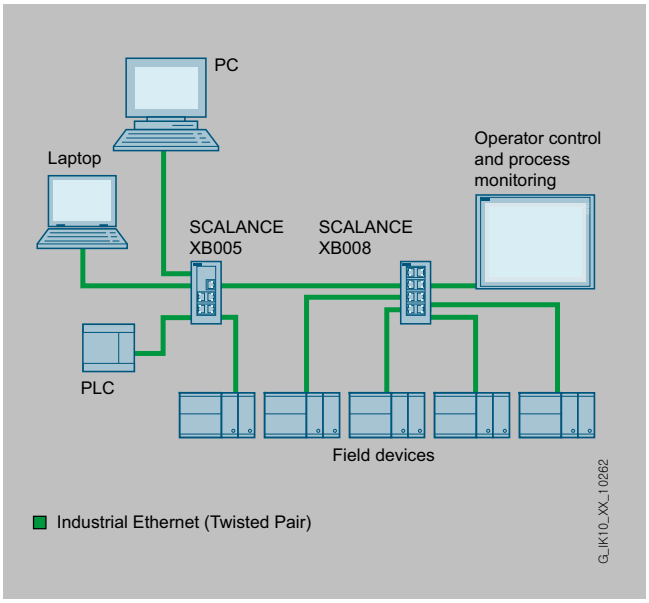

Electrical line topology with SCALANCE XB005 and XB008, or SCALANCE XB005G and XB008G

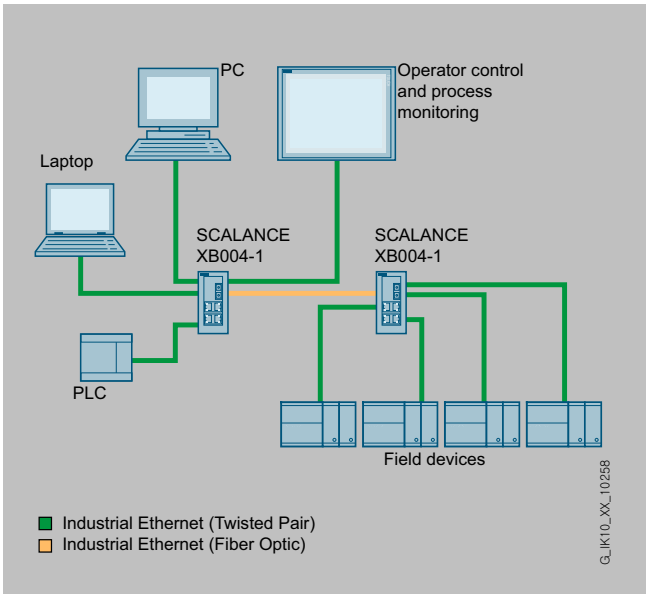

Mixed star topology with SCALANCE XB004-1 or SCALANCE XB004-1G

© Siemens AG 2024

Function (continued)

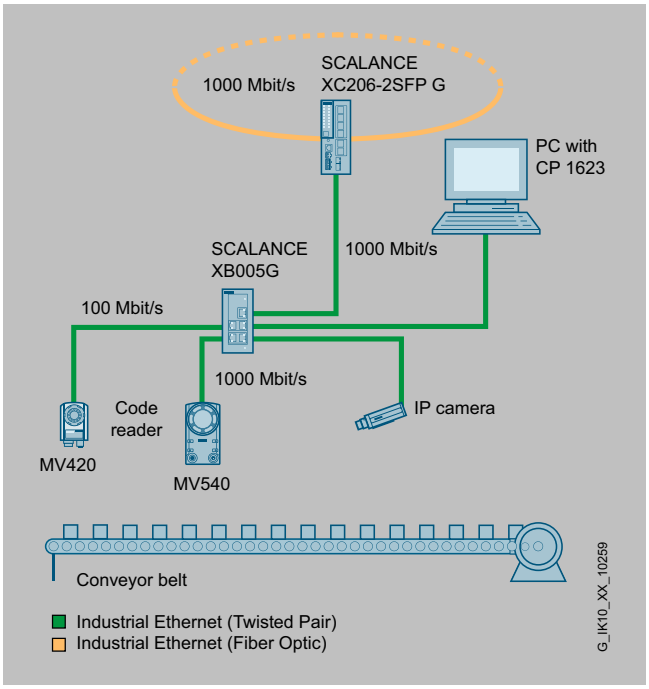

Electrical star topology with SCALANCE XB005G and connection to a Gigabit Ethernet ring

Diagnostics

The following information is displayed by LEDs on site:

- Power
- Port status
- Data traffic

Selection and ordering data

	Article No.
SCALANCE XB-000 Industrial Ethernet switches Unmanaged Industrial Ethernet switches for 10/100/1000 Mbps, LED diagnostics, manual available as download	
• **SCALANCE XB005** 5 x 10/100 Mbps RJ45 ports, electrical	6GK5005-0BA00-1AB2
• **SCALANCE XB008** 8 x 10/100 Mbps RJ45 ports, electrical	6GK5008-0BA10-1AB2
• **SCALANCE XB004-1** 4 x 10/100 Mbps RJ45 ports, electrical 1x 100 Mbps SC port, optical (multimode, glass), up to 5 km	6GK5004-1BD00-1AB2
• **SCALANCE XB004-2** 4 x 10/100 Mbps RJ45 ports, electrical 2 x 100 Mbps SC ports, optical (multimode, glass), up to 5 km	6GK5004-2BD00-1AB2
• **SCALANCE XB004-1LD** 4 x 10/100 Mbps RJ45 ports, electrical 1x 100 Mbps SC port, optical (single-mode, glass), up to 26 km	6GK5004-1BF00-1AB2
• **SCALANCE XB004-2LD** (long distance) 4 x 10/100 Mbps RJ45 ports, electrical 2 x 100 Mbps SC port, optical (single-mode, glass), up to 26 km	6GK5004-2BF00-1AB2
• **SCALANCE XB005G** 5 x 10/100/1000 Mbps RJ45 ports, electrical	6GK5005-0GA10-1AB2
• **SCALANCE XB008G** 8 x 10/100/1000 Mbps RJ45 ports, electrical	6GK5008-0GA10-1AB2
• **SCALANCE XB004-1G** 4 x 10/100/1000 Mbps RJ45 ports, electrical 1x 1000 Mbps SC port, optical (multimode, glass), up to 0.75 km	6GK5004-1GL10-1AB2
• **SCALANCE XB004-1LDG** 4 x 10/100/1000 Mbps RJ45 ports, electrical 1x 1000 Mbps SC port, optical (single-mode, glass), up to 10 km	6GK5004-1GM10-1AB2

© Siemens AG 2024

Accessories

	Article No.
SITOP compact 24 V/0.6 A 1-phase power supply with wide-range input 85 - 264 V AC/110 - 300 V DC, stabilized output voltage 24 V, rated output current value 0.6 A, slim design	6EP1331-5BA00
SCALANCE TAP104 Test access port for the reaction-free extraction of Ethernet data frames (10/100 Mbps) from both transmission directions; extracts complete data traffic, including faulty frames, for further diagnostics.	6GK5104-0BA00-1SA2
IE TP cord RJ45/RJ45 Preassembled 8-core Cat6A patch cable 4 x 2, with two RJ45 plugs, preferred length	
• 0.3 m	6XV1870-3QE30
• 0.5 m	6XV1870-3QE50
• 1 m	6XV1870-3QH10
• 2 m	6XV1870-3QH20
• 3 m	6XV1870-3QH30
• 4 m	6XV1870-3QH40
• 6 m	6XV1870-3QH60
• 10 m	6XV1870-3QN10
• 15 m	6XV1870-3QN15
• 20 m	6XV1870-3QN20
• 25 m	6XV1870-3QN25
• 30 m	6XV1870-3QN30
• 35 m	6XV1870-3QN35
• 40 m	6XV1870-3QN40
• 45 m	6XV1870-3QN45
• 50 m	6XV1870-3QN50
FO standard cable GP 50/125/1400 Multimode cable, sold by the meter; max. delivery unit 1000 m, minimum order quantity 20 m, also available preassembled with SC connectors in various lengths	6XV1873-2A

© Siemens AG 2024

Technical specifications

Article number	6GK5004-1BD00-1A-B2	6GK5004-1BF00-1A-B2	6GK5004-2BF00-1A-B2	6GK5005-0BA00-1A-B2	6GK5008-0BA10-1A-B2
product type designation					
product brand name	SCALANCE	SCALANCE	SCALANCE	SCALANCE	SCALANCE
product type designation	XB004-1	XB004-1LD		XB005	XB008
transfer rate					
transfer rate	10 Mbit/s, 100 Mbit/s	10 Mbit/s, 100 Mbit/s	10 Mbit/s, 100 Mbit/s	10 Mbit/s, 100 Mbit/s	10 Mbit/s, 100 Mbit/s
interfaces for communication integrated					
number of electrical connections					
• for network components or terminal equipment	4; RJ45	4; RJ45	4; RJ45	5; RJ45	8; RJ45
number of 100 Mbit/s SC ports					
• for multimode	1	0	0	0	0
• for single mode (LD)		1	2		
transmission method of the optical interface	100BaseFX	100BaseLX LD	100BaseLX LD		
interfaces other					
number of electrical connections					
• for power supply	1	1	1	1	1
type of electrical connection					
• for power supply	3-pole terminal block	3-pole terminal block	3-pole terminal block	3-pole terminal block	3-pole terminal block
supply voltage, current consumption, power loss					
type of voltage 1 of the supply voltage	DC	DC	DC	DC	DC
• supply voltage 1 rated value	24 V	24 V	24 V	24 V	24 V
• power loss [W] 1 rated value	2.64 W	2.4 W	2.4 W	1.68 W	2.88 W
• supply voltage 1 rated value	19.2 ... 28.8 V	19.2 ... 28.8 V	19.2 ... 28.8 V	19.2 ... 28.8 V	19.2 ... 28.8 V
• consumed current 1 maximum	0.11 A	0.1 A	0.1 A	0.07 A	0.12 A
• type of electrical connection 1 for power supply	3-pole terminal block	3-pole terminal block	3-pole terminal block	3-pole terminal block	3-pole terminal block
• product component 1 fusing at power supply input	Yes	Yes	Yes	Yes	Yes
• fuse protection type 1 at input for supply voltage	0.6 A / 60 V	0.6 A / 60 V	0.6 A / 60 V	0.6 A / 60 V	0.6 A / 60 V
type of voltage 2 of the supply voltage	AC	AC	AC	AC	AC
• supply voltage 2 rated value	19.2 ... 28.8 V	19.2 ... 28.8 V	19.2 ... 28.8 V	19.2 ... 28.8 V	19.2 ... 28.8 V
ambient conditions					
ambient temperature					
• during operation	-10 ... +60 °C	-10 ... +60 °C	-10 ... +60 °C	-10 ... +60 °C	-10 ... +60 °C
• during storage	-40 ... +80 °C	-40 ... +80 °C	-40 ... +80 °C	-40 ... +80 °C	-40 ... +80 °C
• during transport	-40 ... +80 °C	-40 ... +80 °C	-40 ... +80 °C	-40 ... +80 °C	-40 ... +80 °C
relative humidity					
• at 25 °C without condensation during operation maximum	95 %	95 %	95 %	95 %	95 %
protection class IP	IP20	IP20	IP20	IP20	IP20
design, dimensions and weights					
design	Box	Box	Box	Box	Box
width	45 mm	45 mm	45 mm	45 mm	45 mm
height	100 mm	100 mm	100 mm	100 mm	100 mm
depth	87 mm	87 mm	87 mm	87 mm	87 mm
net weight	0.165 kg	0.165 kg	0.205 kg	0.165 kg	0.18 kg

© Siemens AG 2024

Technical specifications (continued)

Article number	6GK5004-1BD00-1A-B2	6GK5004-1BF00-1A-B2	6GK5004-2BF00-1A-B2	6GK5005-0BA00-1A-B2	6GK5008-0BA10-1A-B2
fastening method					
• 35 mm top hat DIN rail mounting	Yes	Yes	Yes	Yes	Yes
• wall mounting	Yes	Yes	Yes	Yes	Yes
• S7-1500 rail mounting	No	No	No	No	No
product functions management, configuration, engineering					
product function					
• multiport mirroring	No	No	No	No	No
• CoS	Yes	Yes	Yes	Yes	Yes
• switch-managed	No	No	No	No	No
PROFINET conformity class	A	A	A	A	A
product functions redundancy					
product function					
• Parallel Redundancy Protocol (PRP)/operation in the PRP-network	Yes	Yes	Yes	Yes	Yes
• Parallel Redundancy Protocol (PRP)/Redundant Network Access (RNA)	No	No	No	No	No
standards, specifications, approvals					
certificate of suitability					
• CE marking	Yes	Yes	Yes	Yes	Yes
• KC approval	Yes	Yes		Yes	Yes
• Regulatory Compliance Mark (RCM)	Yes	Yes	Yes	Yes	Yes
standard					
• for safety from CSA and UL	UL 60950-1, CSA C22.2 No. 60950-1	UL 60950-1, CSA C22.2 No. 60950-1		UL 60950-1, CSA C22.2 No. 60950-1	UL 60950-1, CSA C22.2 No. 60950-1
standards, specifications, approvals hazardous environments					
certificate of suitability					
• ATEX	Yes	Yes	Yes	Yes	Yes
• UKEX	Yes	Yes	Yes	Yes	Yes
• IECEx	Yes	Yes	Yes	Yes	Yes
• ULhazloc approval	Yes	Yes		Yes	Yes
• CCC for hazardous zone according to GB standard	Yes	Yes	Yes	Yes	Yes
• FM registration	Yes	Yes	Yes	Yes	Yes
standards, specifications, approvals other					
certificate of suitability					
• RoHS conformity	Yes	Yes		Yes	Yes
standards, specifications, approvals Environmental Product Declaration					
Environmental Product Declaration	Yes	Yes	Yes	Yes	Yes
Global Warming Potential [CO2 eq]					
• total	141.3 kg	141.3 kg	141.3 kg	151.5 kg	151.5 kg
• during manufacturing	15.99 kg	15.99 kg	15.99 kg	7.42 kg	7.42 kg
• during operation	125.18 kg	125.18 kg	125.18 kg	143.95 kg	143.95 kg
• after end of life	0.15 kg	0.15 kg	0.15 kg	0.14 kg	0.14 kg
product functions general					
MTBF	232 a	238 a		241 a	214 a
reference code					

© Siemens AG 2024

Technical specifications (continued)

Article number	6GK5004-1BD00-1A-B2	6GK5004-1BF00-1A-B2	6GK5004-2BF00-1A-B2	6GK5005-0BA00-1A-B2	6GK5008-0BA10-1A-B2
• according to IEC 81346-2	KF	KF	KF	KF	KF
• according to IEC 81346-2:2019	KFE	KFE	KFE	KFE	KFE
Warranty period	5 a	5 a	5 a	5 a	5 a
product function is supported identification link	Yes; according to IEC 61406-1:2022	Yes; according to IEC 61406-1:2022	Yes; according to IEC 61406-1:2022	Yes; according to IEC 61406-1:2022	Yes; according to IEC 61406-1:2022
further information internet links					
internet link					
• to website: Selection guide for cables and connectors	https://support.industry.siemens.com/cs/ww/en/view/109766358	https://support.industry.siemens.com/cs/ww/en/view/109766358	https://support.industry.siemens.com/cs/ww/en/view/109766358	https://support.industry.siemens.com/cs/ww/en/view/109766358	https://support.industry.siemens.com/cs/ww/en/view/109766358
• to web page: selection aid TIA Selection Tool	https://www.siemens.com/tstcloud	https://www.siemens.com/tstcloud	https://www.siemens.com/tstcloud	https://www.siemens.com/tstcloud	https://www.siemens.com/tstcloud
• to website: Industrial communication	https://www.siemens.com/simatic-net	https://www.siemens.com/simatic-net	https://www.siemens.com/simatic-net	https://www.siemens.com/simatic-net	https://www.siemens.com/simatic-net
• to web page: SiePortal	https://sieportal.siemens.com/	https://sieportal.siemens.com/	https://sieportal.siemens.com/	https://sieportal.siemens.com/	https://sieportal.siemens.com/
• to website: Image database	https://www.automation.siemens.com/bilddb	https://www.automation.siemens.com/bilddb	https://www.automation.siemens.com/bilddb	https://www.automation.siemens.com/bilddb	https://www.automation.siemens.com/bilddb
• to website: CAx-Download-Manager	https://www.siemens.com/cax	https://www.siemens.com/cax	https://www.siemens.com/cax	https://www.siemens.com/cax	https://www.siemens.com/cax
• to website: Industry Online Support	https://support.industry.siemens.com	https://support.industry.siemens.com	https://support.industry.siemens.com	https://support.industry.siemens.com	https://support.industry.siemens.com

More information

Selection Tool:

To support the selection of SCALANCE network components, the TIA Selection Tool is available at:

www.siemens.com/tst

Ordering overview:

You can find more information on the FastConnect range in the "Cabling technology for communication networks in industry" ordering overview.

© Siemens AG 2024

Overview

The unmanaged Industrial Ethernet switches of the SCALANCE XC-100 product line are optimized for installing Industrial Ethernet networks at transfer rates of 10/100 Mbps in line and star topologies for machine-level applications:

- Connection to stations or networks according to the port type of the devices – electrical with RJ45 port or optical with ST/BFOC or SC port
- Space-saving control cabinet installation on DIN rail, SIMATIC S7-300, S7-1500 DIN rail, or for wall mounting
- Rugged station connections with industry-standard RJ45 plug-in connectors that offer additional strain and bending strain relief thanks to latching on the enclosure (securing collar)
- Redundant power supply
- Clear diagnostics display on the device by means of LEDs (power, link status, data communication)
- Fault signaling contact with easy adjustment using the SET button

Product variants

SCALANCE XC106-2/SCALANCE XC108/SCALANCE XC116/ SCALANCE XC124/SCALANCE X108PoE

- Construction of optical Industrial Ethernet line or star topologies:
  - SCALANCE XC106-2
    With 6 electrical ports (RJ45 with securing collar) and 2 optical ports (ST/BFOC)
  - SCALANCE XC106-2
    With 6 electrical ports (RJ45 with securing collar) and 2 optical ports (SC)
  - SCALANCE XC108
    With 8 electrical ports (RJ45 with securing collar)
  - SCALANCE XC116
    With 16 electrical ports (RJ45 with securing collar)
  - SCALANCE XC124
    With 24 electrical ports (RJ45 with securing collar)
- Diagnostics on the device using LEDs (power, link status, data traffic) and signaling contact (signal mask can be set using a button on the device)
- The RJ45 ports are suitable for industrial use and have additional securing collars, optimized for connecting the IE FC RJ45 plug 180.

Benefits

get Designed for Industry

- Ideal solution for configuring Industrial Ethernet line and star topologies
- Space-saving installation in the control cabinet thanks to compact design in SIMATIC S7-1500 format and mounting option on the SIMATIC S7-1500 DIN rail
- Extended temperature range from -40 °C to +70 °C
- Reliable plug-in connection thanks to rugged device connection with industry-standard FastConnect plugs
- Installation is possible without a patch field by means of IE FC RJ45 plug 180 and IE FC standard cable
- Uncrossed connecting cables can be used due to the integrated autocrossover function

Application

The switches of the SCALANCE XC-100 product line support the inexpensive construction of Industrial Ethernet line or star topologies with switching functions for machine level applications. They are designed for installation in the control cabinet. The devices are approved for ATEX Zone 2 and IECEx, which allow them to be used in hazardous areas. The SCALANCE XC108 also has E1 approval, making the products especially suitable for use in public transportation vehicles. Furthermore, the SCALANCE XC-100 product line features various approvals for shipbuilding applications.

Design

The SCALANCE XC-100 Industrial Ethernet switches with enclosure rear panel made of metal are optimized for mounting on a DIN rail and an S7-1500 DIN rail. Direct wall mounting in various positions is also possible. Thanks to the enclosure dimensions that correspond to those of the SIMATIC S7-1500, the devices are ideally suited for integration into automation solutions and mounting on the SIMATIC S7-1500 DIN rail. Mounting on a SIMATIC S7-300 DIN rail is also possible.

The SCALANCE XC-100 switches feature:

- A 4-pin terminal block for connecting the redundant supply voltage (2 x 24 V DC)
- A raised row of LEDs for displaying status information (power, link status, data communication, signaling contact)
- A 2-pin terminal block for connecting the floating signaling contact
- A SET button for on-site configuration of the signaling contact

The following port types are available:

- 10/100BaseTX, RJ45 port;
  automatic detection of data transmission rate (10 or 100 Mbps), with autosensing and autocrossover function for connecting IE FC cables via IE FC RJ45 plug 180 over distances up to 100 m
- 100BaseFX, ST/BFOC port;
  for direct connection to the Industrial Ethernet glass fiber-optic cables up to 5 km
- 100BaseFX, SC port;
  for direct connection to the Industrial Ethernet glass fiber-optic cables up to 5 km

© Siemens AG 2024

Function

- Construction of electrical and optical Industrial Ethernet line or star topologies
- Selected connecting cables can be used due to autocrossover function integrated in the ports
- Load disconnection through integral switch functionality
- Easy network configuration and network expansion

  No limitation of the expansion of the network when switches of the SCALANCE XC-100 product line are cascaded

Network topology and network configuration

The SCALANCE XC-100 switches are typically installed with the stations to be connected in a control cabinet. They can be mixed electrically and optically in star and line topologies.

When configuring the network, the following boundary conditions must be observed:

- Length of the twisted pair cable between two SCALANCE XC switches:
  - Max. 100 m with Industrial Ethernet FastConnect products
- Length of the optical cables:
  - Max. 5 km with Industrial Ethernet glass fiber-optic cables

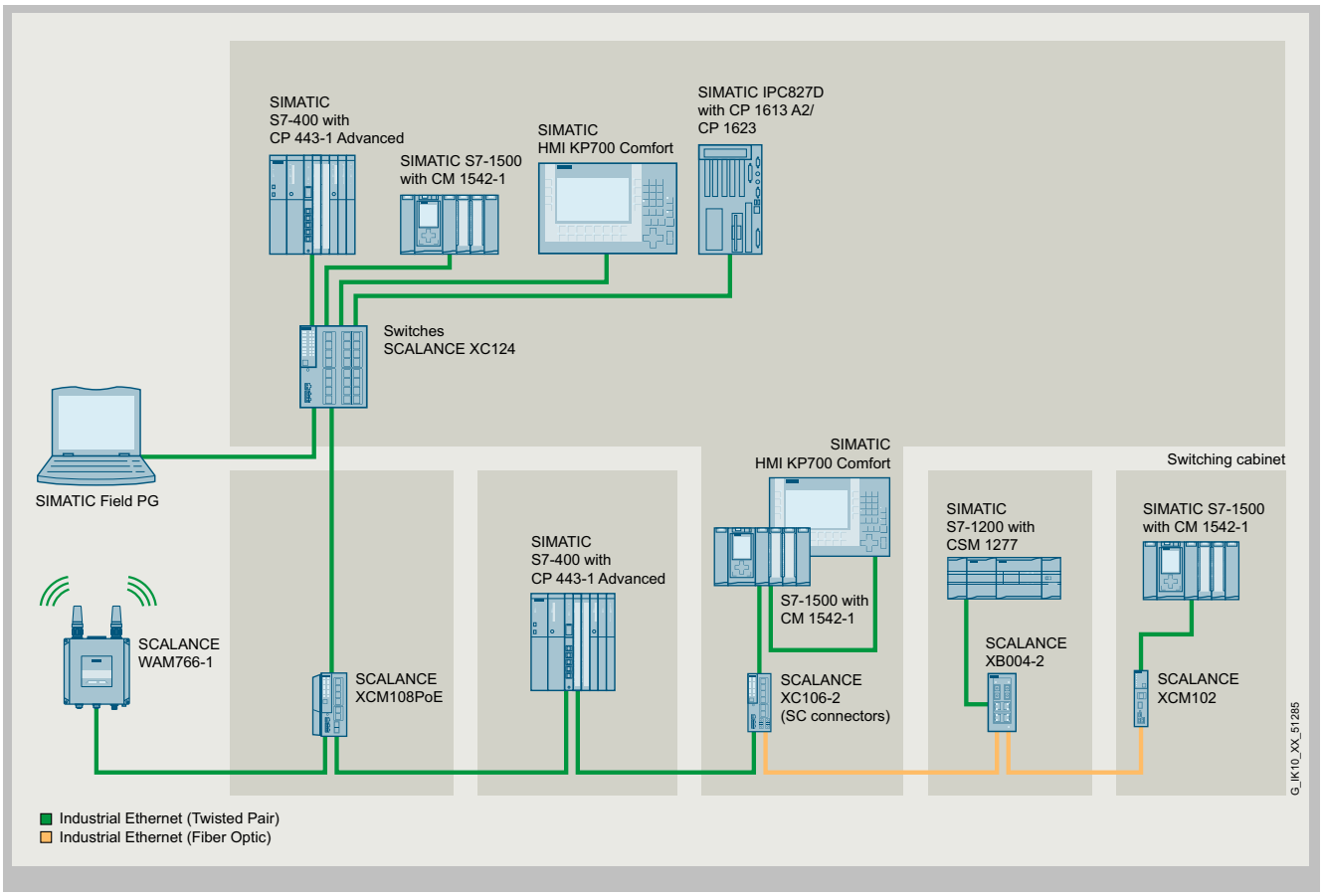

Star-shaped network topology with SCALANCE XC124 and Power over Ethernet connection via SCALANCE XCM108PoE with line topology to SCALANCE XC106-2 and SCALANCE XB004-2

Diagnostics

The following information is displayed on site by LEDs:

- Power
- Port status
- Data traffic

The Industrial Ethernet switches of the SCALANCE XC-100 line can also be monitored using the floating signaling contact.

© Siemens AG 2024

Function (continued)

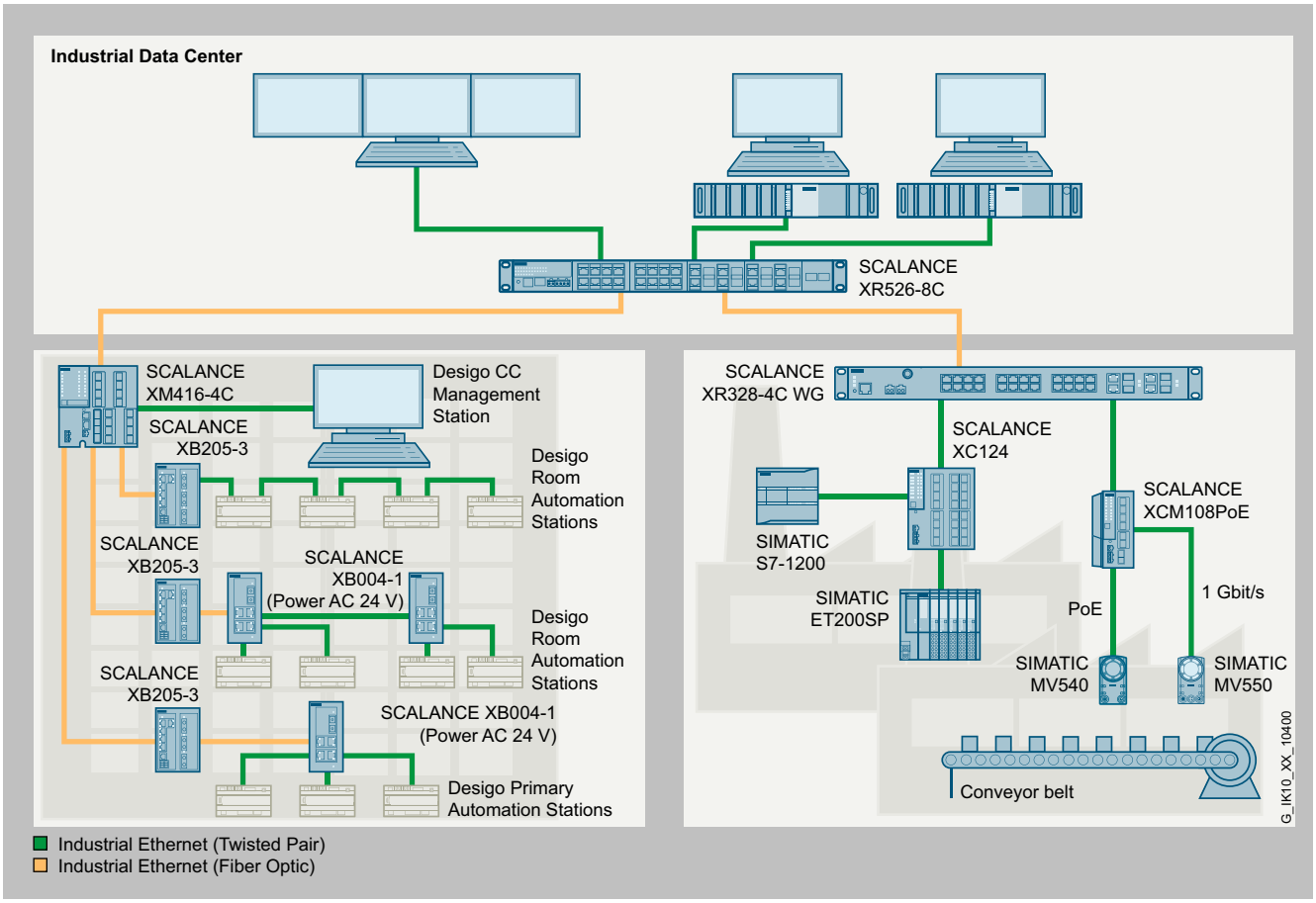

Connection of SCALANCE X switches in building and industry automation to SCALANCE XR-500 networks in the backbone

© Siemens AG 2024

Selection and ordering data

	Article No.
SCALANCE XC-100 Industrial Ethernet switches Unmanaged Industrial Ethernet switches for 10/100 Mbps, manual available as download	
• **SCALANCE XC106-2** 6 x 10/100 Mbps RJ45 ports, electrical 2 x ST/BFOC ports, optical (multimode BFOC, glass) up to 5 km	6GK5106-2BB00-2AC2
• **SCALANCE XC106-2** 6 x 10/100 Mbps RJ45 ports, electrical 2 x ST/BFOC ports, optical (multimode SC, glass)	6GK5106-2BD00-2AC2
• **SCALANCE XC108** 8 x 10/100 Mbps RJ45 ports, electrical	6GK5108-0BA00-2AC2
• **SCALANCE XC116** 16 x 10/100 Mbps RJ45 ports, electrical	6GK5116-0BA00-2AC2
• **SCALANCE XC124** 24 x 10/100 Mbps RJ45 ports, electrical	6GK5124-0BA00-2AC2

Accessories

	Article No.
S7-1500 PM 1507 power supply SIMATIC PM 1507 24 V/3 A stabilized power supply for SIMATIC S7-1500 Input: 120/230 V AC Output 24 V DC/3 A	6EP1332-4BA00
S7-1500 PM 1507 power supply SIMATIC PM 1507 24 V/8 A stabilized power supply for SIMATIC S7-1500 Input: 120/230 V AC Output 24 V DC/8 A	6EP1333-4BA00
SCALANCE TAP104 Test access port for the reaction-free extraction of Ethernet data frames (10/100 Mbps) from both transmission directions; extracts complete data traffic, including faulty frames, for further diagnostics.	6GK5104-0BA00-1SA2
IE FC RJ45 plug 180 2 x 2 RJ45 connector for Industrial Ethernet with rugged metal enclosure and integrated insulation displacement contacts for connecting Industrial Ethernet FC installation cables; with 180° cable outlet; for network components and CPs/CPUs with Industrial Ethernet interface	
• 1 pack = 1 unit	6GK1901-1BB10-2AA0
IE FC TP standard cable GP 2 x 2 (type A) 4-core, shielded TP installation cable for connection to IE FC RJ45 outlet/IE FC RJ45 plug; PROFINET-compatible; with UL approval; sold by the meter; max. delivery unit 1000 m, minimum order quantity 20 m, also available as preassembled cable with RJ45 plugs in various lengths	6XV1840-2AH10
FC ST/ BFOC plug Screw connector for on-site assembly on FC fiber-optic cable; (1 pack = 10 units + cleaning cloths)	6GK1900-1GB00-0AC0
FO standard cable GP 50/125/1400 Multimode cable, sold by the meter; max. delivery unit 1000 m, minimum order quantity 20 m, also available preassembled with ST/BFOC and SC connectors in various lengths	6XV1873-2A

© Siemens AG 2024

Technical specifications

Article number	6GK5106-2BB00-2AC2	6GK5106-2BD00-2AC2	6GK5108-0BA00-2AC2
product type designation			
product brand name	SCALANCE	SCALANCE	SCALANCE
product type designation	XC106-2	XC106-2	XC108
transfer rate			
transfer rate	10 Mbit/s, 100 Mbit/s	10 Mbit/s, 100 Mbit/s	10 Mbit/s, 100 Mbit/s
interfaces for communication integrated			
number of electrical connections			
• for network components or terminal equipment	6; RJ45	6; RJ45	8; RJ45
number of 100 Mbit/s ST(BFOC) ports			
• for multimode	2		
number of 100 Mbit/s SC ports			
• for multimode		2	
transmission method of the optical interface	100BaseFX	100BaseFX	
interfaces other			
number of electrical connections			
• for signaling contact	1	1	1
• for power supply	1	1	1
type of electrical connection			
• for signaling contact	2-pole terminal block	2-pole terminal block	2-pole terminal block
• for power supply	4-pole terminal block	4-pole terminal block	4-pole terminal block
operating voltage of the signaling contacts			
• at DC rated value	24 V	24 V	24 V
operational current of the signaling contacts			
• at DC maximum	0.1 A	0.1 A	0.1 A
supply voltage, current consumption, power loss			
product component connection for redundant voltage supply	Yes	Yes	Yes
type of voltage 1 of the supply voltage	DC	DC	DC
• supply voltage 1 rated value	24 V	24 V	24 V
• power loss [W] 1 rated value	4.8 W	4.8 W	3 W
• supply voltage 1 rated value	9.6 ... 31.2 V	9.6 ... 31.2 V	9.6 ... 31.2 V
• consumed current 1 maximum	0.4 A	0.4 A	0.25 A
• type of electrical connection 1 for power supply	4-pole terminal block	4-pole terminal block	4-pole terminal block
• product component 1 fusing at power supply input	Yes	Yes	Yes
• fuse protection type 1 at input for supply voltage	2.5 A / 125 V	2.5 A / 125 V	2.5 A / 125 V
ambient conditions			
ambient temperature			
• during operation	-40 ... +70 °C	-40 ... +70 °C	-40 ... +70 °C
• during storage	-40 ... +85 °C	-40 ... +85 °C	-40 ... +85 °C
• during transport	-40 ... +85 °C	-40 ... +85 °C	-40 ... +85 °C
relative humidity			
• at 25 °C without condensation during operation maximum	95 %	95 %	95 %
protection class IP	IP20	IP20	IP20
design, dimensions and weights			
design	compact	compact	compact
width	60 mm	60 mm	60 mm
height	147 mm	147 mm	147 mm
depth	125 mm	125 mm	125 mm
net weight	0.5 kg	0.5 kg	0.475 kg

© Siemens AG 2024

Technical specifications (continued)

Article number	6GK5106-2BB00-2AC2	6GK5106-2BD00-2AC2	6GK5108-0BA00-2AC2
material of the enclosure	Polycarbonate (PC-GF10)	Polycarbonate (PC-GF10)	Polycarbonate (PC-GF10)
fastening method			
• 35 mm top hat DIN rail mounting	Yes	Yes	Yes
• wall mounting	Yes	Yes	Yes
• S7-300 rail mounting	Yes	Yes	Yes
• S7-1500 rail mounting	Yes	Yes	Yes
product features, product functions, product components general			
number of automatically learnable MAC addresses	2 048	2 048	2 048
product functions management, configuration, engineering			
product function			
• multiport mirroring	No	No	No
• CoS	Yes	Yes	Yes
• switch-managed	No	No	No
PROFINET conformity class	A	A	A
product functions redundancy			
product function			
• Parallel Redundancy Protocol (PRP)/operation in the PRP-network	Yes	Yes	Yes
• Parallel Redundancy Protocol (PRP)/Redundant Network Access (RNA)	No	No	No
standards, specifications, approvals			
certificate of suitability			
• CE marking	Yes	Yes	Yes
• EC Declaration of Conformity EN 61010, IEC 61010-1, UL 61010A-1	Yes	Yes	Yes
• KC approval	Yes	Yes	Yes
• Regulatory Compliance Mark (RCM)	Yes	Yes	Yes
standard			
• for safety from CSA and UL	UL 60950-1, CSA C22.2 No. 60950-1	UL 60950-1, CSA C22.2 No. 60950-1	UL 60950-1, CSA C22.2 No. 60950-1
standards, specifications, approvals hazardous environments			
certificate of suitability			
• ATEX	Yes	Yes	Yes
• UKEX	Yes	Yes	Yes
• IECEx	Yes	Yes	Yes
• ULhazloc approval	Yes	Yes	Yes
• CCC for hazardous zone according to GB standard	Yes	Yes	Yes
• FM registration	Yes	Yes	Yes
standards, specifications, approvals other			
certificate of suitability			
• E1 approval			Yes
• RoHS conformity	Yes	Yes	Yes
standards, specifications, approvals marine classification			
Marine classification association			
• American Bureau of Shipping Europe Ltd. (ABS)	Yes	Yes	Yes
• French marine classification society (BV)	Yes	Yes	Yes
• DNV GL	Yes	Yes	Yes
• Korean Register of Shipping (KRS)	Yes	Yes	Yes

© Siemens AG 2024

Technical specifications (continued)

Article number	6GK5106-2BB00-2AC2	6GK5106-2BD00-2AC2	6GK5108-0BA00-2AC2
• Lloyds Register of Shipping (LRS)	Yes	Yes	Yes
• Nippon Kaiji Kyokai (NK)	Yes	Yes	Yes
• Polski Rejestr Statkow (PRS)	Yes	Yes	Yes
• Royal Institution of Naval Architects (RINA)	Yes	Yes	Yes
standards, specifications, approvals Environmental Product Declaration			
Siemens Eco Profile (SEP)			Siemens EcoTech
Environmental Product Declaration	Yes	Yes	Yes
Global Warming Potential [CO2 eq]			
• total	220.3 kg	220.3 kg	153.7 kg
• during manufacturing	32.08 kg	32.08 kg	28.4 kg
• during operation	187.75 kg	187.75 kg	125.2 kg
• after end of life	0.48 kg	0.48 kg	0.02 kg
product functions general			
laser protection class	LED Class 1	LED Class 1	LED Class 1
reference code			
• according to IEC 81346-2	KF	KF	KF
• according to IEC 81346-2:2019	KFE	KFE	KFE
Warranty period	5 a	5 a	5 a
product function is supported identification link	Yes; according to IEC 61406-1:2022	Yes; according to IEC 61406-1:2022	Yes; according to IEC 61406-1:2022
further information internet links			
internet link			
• to website: Selection guide for cables and connectors	https://support.industry.siemens.com/cs/ww/en/view/109766358	https://support.industry.siemens.com/cs/ww/en/view/109766358	https://support.industry.siemens.com/cs/ww/en/view/109766358
• to web page: selection aid TIA Selection Tool	https://www.siemens.com/tstcloud	https://www.siemens.com/tstcloud	https://www.siemens.com/tstcloud
• to website: Industrial communication	https://www.siemens.com/simatic-net	https://www.siemens.com/simatic-net	https://www.siemens.com/simatic-net
• to web page: SiePortal	https://sieportal.siemens.com/	https://sieportal.siemens.com/	https://sieportal.siemens.com/
• to website: Image database	https://www.automation.siemens.com/bilddb	https://www.automation.siemens.com/bilddb	https://www.automation.siemens.com/bilddb
• to website: CAx-Download-Manager	https://www.siemens.com/cax	https://www.siemens.com/cax	https://www.siemens.com/cax
• to website: Industry Online Support	https://support.industry.siemens.com	https://support.industry.siemens.com	https://support.industry.siemens.com

Article number	6GK5116-0BA00-2AC2	6GK5124-0BA00-2AC2
product type designation		
product brand name	SCALANCE	SCALANCE
product type designation	XC116	XC124
transfer rate		
transfer rate	10 Mbit/s, 100 Mbit/s	10 Mbit/s, 100 Mbit/s
interfaces for communication integrated		
number of electrical connections		
• for network components or terminal equipment	16; RJ45	24; RJ45
interfaces other		
number of electrical connections		
• for signaling contact	1	1
• for power supply	1	1
type of electrical connection		
• for signaling contact	2-pole terminal block	2-pole terminal block
• for power supply	4-pole terminal block	4-pole terminal block
operating voltage of the signaling contacts		
• at DC rated value	24 V	24 V

© Siemens AG 2024

Technical specifications (continued)

Article number	6GK5116-0BA00-2AC2	6GK5124-0BA00-2AC2
operational current of the signaling contacts		
• at DC maximum	0.1 A	0.1 A
supply voltage, current consumption, power loss		
product component connection for redundant voltage supply	Yes	Yes
type of voltage 1 of the supply voltage	DC	DC
• supply voltage 1 rated value	24 V	24 V
• power loss [W] 1 rated value	5.4 W	7.8 W
• supply voltage 1 rated value	9.6 ... 31.2 V	9.6 ... 31.2 V
• consumed current 1 maximum	0.45 A	0.65 A
• type of electrical connection 1 for power supply	4-pole terminal block	4-pole terminal block
• product component 1 fusing at power supply input	Yes	Yes
• fuse protection type 1 at input for supply voltage	2.5 A / 125 V	2.5 A / 125 V
ambient conditions		
ambient temperature		
• during operation	-40 ... +70 °C	-40 ... +70 °C
• during storage	-40 ... +85 °C	-40 ... +85 °C
• during transport	-40 ... +85 °C	-40 ... +85 °C
relative humidity		
• at 25 °C without condensation during operation maximum	95 %	95 %
protection class IP	IP20	IP20
design, dimensions and weights		
design	compact	compact
width	120 mm	120 mm
height	147 mm	147 mm
depth	125 mm	125 mm
net weight	0.775 kg	0.85 kg
material of the enclosure	Polycarbonate (PC-GF10)	Polycarbonate (PC-GF10)
fastening method		
• 35 mm top hat DIN rail mounting	Yes	Yes
• wall mounting	Yes	Yes
• S7-300 rail mounting	Yes	Yes
• S7-1500 rail mounting	Yes	Yes
product features, product functions, product components general		
number of automatically learnable MAC addresses	2 048	2 048
product functions management, configuration, engineering		
product function		
• multiport mirroring	No	No
• CoS	Yes	Yes
• switch-managed	No	No
PROFINET conformity class	A	A
product functions redundancy		
product function		
• Parallel Redundancy Protocol (PRP)/operation in the PRP-network	Yes	Yes
• Parallel Redundancy Protocol (PRP)/Redundant Network Access (RNA)	No	No
standards, specifications, approvals		
certificate of suitability		
• CE marking	Yes	Yes

© Siemens AG 2024

Technical specifications (continued)

Article number	6GK5116-0BA00-2AC2	6GK5124-0BA00-2AC2
• EC Declaration of Conformity EN 61010, IEC 61010-1, UL 61010A-1	Yes	Yes
• KC approval	Yes	Yes
• Regulatory Compliance Mark (RCM)	Yes	Yes
standard		
• for safety from CSA and UL	UL 60950-1, CSA C22.2 No. 60950-1	UL 60950-1, CSA C22.2 No. 60950-1
standards, specifications, approvals hazardous environments		
certificate of suitability		
• ATEX	Yes	Yes
• UKEX	Yes	Yes
• IECEx	Yes	Yes
• ULhazloc approval	Yes	Yes
• CCC for hazardous zone according to GB standard	Yes	Yes
• FM registration	Yes	Yes
standards, specifications, approvals other		
certificate of suitability		
• RoHS conformity	Yes	Yes
standards, specifications, approvals marine classification		
Marine classification association		
• American Bureau of Shipping Europe Ltd. (ABS)	Yes	Yes
• French marine classification society (BV)	Yes	Yes
• DNV GL	Yes	Yes
• Korean Register of Shipping (KRS)	Yes	Yes
• Lloyds Register of Shipping (LRS)	Yes	Yes
• Nippon Kaiji Kyokai (NK)	Yes	Yes
• Polski Rejestr Statkow (PRS)	Yes	Yes
• Royal Institution of Naval Architects (RINA)	Yes	Yes
standards, specifications, approvals Environmental Product Declaration		
Environmental Product Declaration	Yes	Yes
Global Warming Potential [CO2 eq]		
• total	441.1 kg	441.1 kg
• during manufacturing	47.67 kg	47.67 kg
• during operation	392.82 kg	392.82 kg
• after end of life	0.57 kg	0.57 kg
product functions general		
laser protection class	LED Class 1	LED Class 1
reference code		
• according to IEC 81346-2	KF	KF
• according to IEC 81346-2:2019	KFE	KFE
Warranty period	5 a	5 a
product function is supported identification link	Yes; according to IEC 61406-1:2022	Yes; according to IEC 61406-1:2022
further information internet links		
internet link		
• to website: Selection guide for cables and connectors	https://sup-port.industry.siemens.com/cs/ww/en/view/109766358	https://sup-port.industry.siemens.com/cs/ww/en/view/109766358
• to web page: selection aid TIA Selection Tool	https://www.siemens.com/tstcloud	https://www.siemens.com/tstcloud
• to website: Industrial communication	https://www.siemens.com/simatic-net	https://www.siemens.com/simatic-net
• to web page: SiePortal	https://sieportal.siemens.com/	https://sieportal.siemens.com/

© Siemens AG 2024

Technical specifications (continued)

Article number	6GK5116-0BA00-2AC2	6GK5124-0BA00-2AC2
• to website: Image database	https://www.automation.siemens.com/bilddb	https://www.automation.siemens.com/bilddb
• to website: CAx-Download-Manager	https://www.siemens.com/cax	https://www.siemens.com/cax
• to website: Industry Online Support	https://support.industry.siemens.com	https://support.industry.siemens.com

More information

Selection Tool:

To support the selection of SCALANCE network components, the TIA Selection Tool is available at:

www.siemens.com/tst

Ordering overview:

You can find more information on the FastConnect range in the "Cabling technology for communication networks in industry" ordering overview.

© Siemens AG 2024

Overview

The managed SCALANCE XB-200 switches are optimized for setting up 10/100 Mbps Industrial Ethernet networks in line, star or ring topologies

- Electrical and optical node or network connections can be implemented using 8, 13 or 16 RJ45 ports (10/100 Mbps) or 2 or 3 fiber-optic ports (100 Mbps). The LD (Long Distance) variants offer a transmission range of up to 26 km (XB205-3LD and XB206-2LD)
- Rugged plastic enclosure
- Diagnostics on the device by means of LEDs (power, link status, data communication)
- The devices feature SNMP access, integral web server, remote diagnostics, and signaling over the network.
- Diagnostics and parameterization via web page or console port
- Support of the two industrial protocols, PROFINET and EtherNet/IP, in the same device (software-switchable)
- All device versions available with default setting for both PROFINET and EtherNet/IP

Product variants

- Switches with electrical ports:
  - SCALANCE XB208;
    8 x 10/100 Mbps RJ45 port, electrical
  - SCALANCE XB216;
    16 x 10/100 Mbps RJ45 port, electrical
- Switches with electrical and optical ports
  - SCALANCE XB205-3 (ST);
    5 x 10/100 Mbps RJ45 port, electrical
    3 x 100 Mbps ST/BFOC port, optical
  - SCALANCE XB205-3 (SC):
    5 x 10/100 Mbps RJ45 port, electrical
    3 x 100 Mbps SC port, optical
  - SCALANCE XB205-3 LD (SC);
    5 x 10/100 Mbps RJ45 port, electrical
    3 x 100 Mbps SC port, optical (up to 26 km)
  - SCALANCE XB206-2 (ST);
    6 x 10/100 Mbps RJ45 port, electrical
    2 x 100 Mbps ST/BFOC port, optical
  - SCALANCE XB206-2 (SC);
    6 x 10/100 Mbps RJ45 port, electrical
    2 x 100 Mbps SC port, optical
  - SCALANCE XB206-2LD (SC);
    6 x 10/100 Mbps RJ45 port, electrical
    2 x 100 Mbps SC port, optical (up to 26 km)

Overview (continued)

  - SCALANCE XB213-3 (ST);
    13 x 10/100 Mbps RJ45 port, electrical
    3 x 100 Mbps ST/BFOC port, optical
  - SCALANCE XB213-3 (SC);
    13 x 10/100 Mbps RJ45 port, electrical
    3 x 100 Mbps SC port, optical
  - SCALANCE XB213-3 LD (SC);
    13 x 10/100 Mbps RJ45 port, electrical
    3 x 100 Mbps SC port, optical

Benefits

get Designed for Industry

- Ideal solution for configuring Ethernet line, ring and star topologies
- High network availability due to design of redundant ring structures on the basis of High Speed Redundancy (HRP) or Media Redundancy Protocol (MRP), redundancy manager integrated
- Quick and easy diagnosis with LEDs on the device, using integral web server and via SNMP
- Integration of SCALANCE XB-200 switches in existing network management systems (e.g. SINEC NMS) through SNMP access
- Load limiting when using multicast-based protocols (Voice over IP, Video) thanks to IGMP Snooping/Querier and additional multicast and broadcast limiting per port
- Uncrossed connecting cables can be used due to the integrated autocrossover function
- Support of the two industrial protocols, PROFINET and EtherNet/IP, in the same device
- Low-maintenance operation thanks to fanless construction
- Support of VLANs permits integration into Enterprise Security Policies

© Siemens AG 2024

Application

The SCALANCE XB-200 Industrial Ethernet Switches are simple, low-cost Industrial Ethernet switches that contain the necessary software functionalities for automation with various protocols. The devices with degree of protection IP20 are designed for operation in the control cabinet.

Features:

- Device diagnostics with LEDs (power, link status, data communication)
- Remote diagnostics possible via PROFINET, Ethernet/IP, SNMP, CLI and web browser
- Switchover between the two industry protocols PROFINET and Ethernet/IP is possible in the device

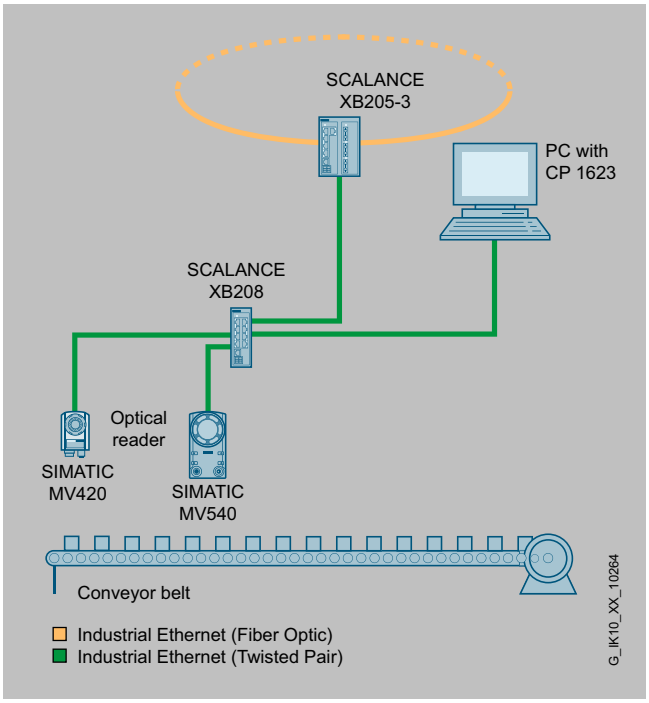

Integration of code-reading cameras into the machine network with SCALANCE XB-200

Design

The SCALANCE XB-200 Industrial Ethernet switches in their rugged plastic enclosure are optimized for mounting on DIN rails.

The devices are designed with IP20 degree of protection.

The switches have a 6-pin terminal block for connecting the redundant supply voltage (24 V DC) and the grounding. The port LEDs provide information on the status (power, link status, data traffic).

Ethernet interfaces:

- 10/100BaseTX, RJ45 connection;
  8/6 or 16/13 x RJ45 socket, automatic data transfer rate detection, with autosensing and autocrossover function
- 100 Mbps, ST(BFOC) FO connection;
  2/3 x ST(BFOC) FO socket (multimode)
- 100 Mbps, SC-FO connection;
  2/3 x SC-FO socket (multimode)
- 100 Mbps, SC-LD-FO connection;
  2/3 x SC-LD-FO socket (single-mode)

Other interfaces:

- 6-pin terminal block for redundant voltage infeed (24 V DC) and grounding
- 1 x RJ11 as connection for the serial interface

The port LEDs provide information on the status (power, link status, data traffic).

Remote diagnostics is possible by means SNMP, web browser and CLI.

© Siemens AG 2024

Function

- High-speed redundancy in the ring with High Speed Redundancy (HRP) or PROFINET-compliant ring redundancy (MRP)

  Reliable communication is achieved by closing an optical/electrical line with XR-500, XM-400, X-300 or X-200 switches to form an HSR ring. The SCALANCE XB-200 switches have an integral redundancy manager (RM) which monitors the function of the network continuously. It recognizes the failure of a transmission link or the failure of a SCALANCE X switch in the ring and activates the substitute path.

- Redundant interfacing to company networks

  The SCALANCE XB-200 switches support the standardized redundancy procedures Spanning Tree Protocol (STP) and Rapid Spanning Tree Protocol (RSTP). This enables a subnetwork to be connected redundantly to a higher level corporate network with reduced requirements for the reconfiguration time (in the order of seconds).

- Support of virtual networks (VLAN)

  For structuring Industrial Ethernet networks with a fast-growing number of nodes, a physically existing network can be divided into several virtual subnetworks.

- Load limiting with use of multicast protocols (e.g. querier, video)

  By learning the multicast sources and targets (IGMP snooping), SCALANCE XB-200 switches can also filter multicast data traffic and therefore limit the load in the network. Multicast and broadcast traffic can be limited.

Network topology and network configuration

The network topology can easily be adapted to the structure of the plant with SCALANCE XB-200 Industrial Ethernet switches.

The following network structures and combinations of structures can be implemented:

- Fast Ethernet rings with fast media redundancy
- At the same time, the SCALANCE XB-200 switches support redundant connection of the ring structure to the corporate network with a Rapid Spanning Tree.
- Star topology with SCALANCE XB-200 switches

  Each SCALANCE XB-200 switch represents a neutral point which can interconnect as many as 8/16 nodes or subnetworks.

When configuring the network, the following boundary conditions must be observed:

- Maximum cable length for twisted pair:
  - Max. 100 m with Industrial Ethernet FC cable and Industrial Ethernet FC plugs
  - Max. 10 m using patches with TP cord
- Maximum cable length between two SC connections (note transceiver data):
  - 5 km (100 Mbps)
- Maximum cable length between two SC LD connections (note transceiver data):
  - 26 km (100 Mbps)
- IP address:

  In the case of SCALANCE XB-200 Industrial Ethernet switches, the IP address is assigned by means of the Dynamic Host Configuration Protocol (DHCP). If no corresponding server is available in the network, the IP address can be assigned using DCP.

Commissioning and diagnostics

PROFINET diagnostic interrupts from SCALANCE XB-200 switches can be displayed with the appropriate SIMATIC engineering tools and processed in the PLC with an expanded diagnostics function. The engineering outlay for the PLC and HMI has been drastically reduced due to the complete integration in the SIMATIC concept for system error messages.

SCALANCE XB-200 Industrial Ethernet switches can also be integrated in a network management system (e.g. SINEC NMS) using the standardized Simple Network Management Protocol (SNMP). In the event of faults in the device, error messages (SNMP traps) can be sent to a network management system (e.g. SINEC NMS) or as an email to a specified network administrator.

The integrated web server enables configuration and diagnostics settings to be made using a standard web browser (e.g. port configuration). Statistical information can also be read out over the web server (e.g. port capacity utilization). Further access is possible via CLI, by means of which the device can be parameterized, managed and diagnosed.

The following information is displayed on site by LEDs:

- Power
- Port status
- Data traffic

© Siemens AG 2024

Function (continued)

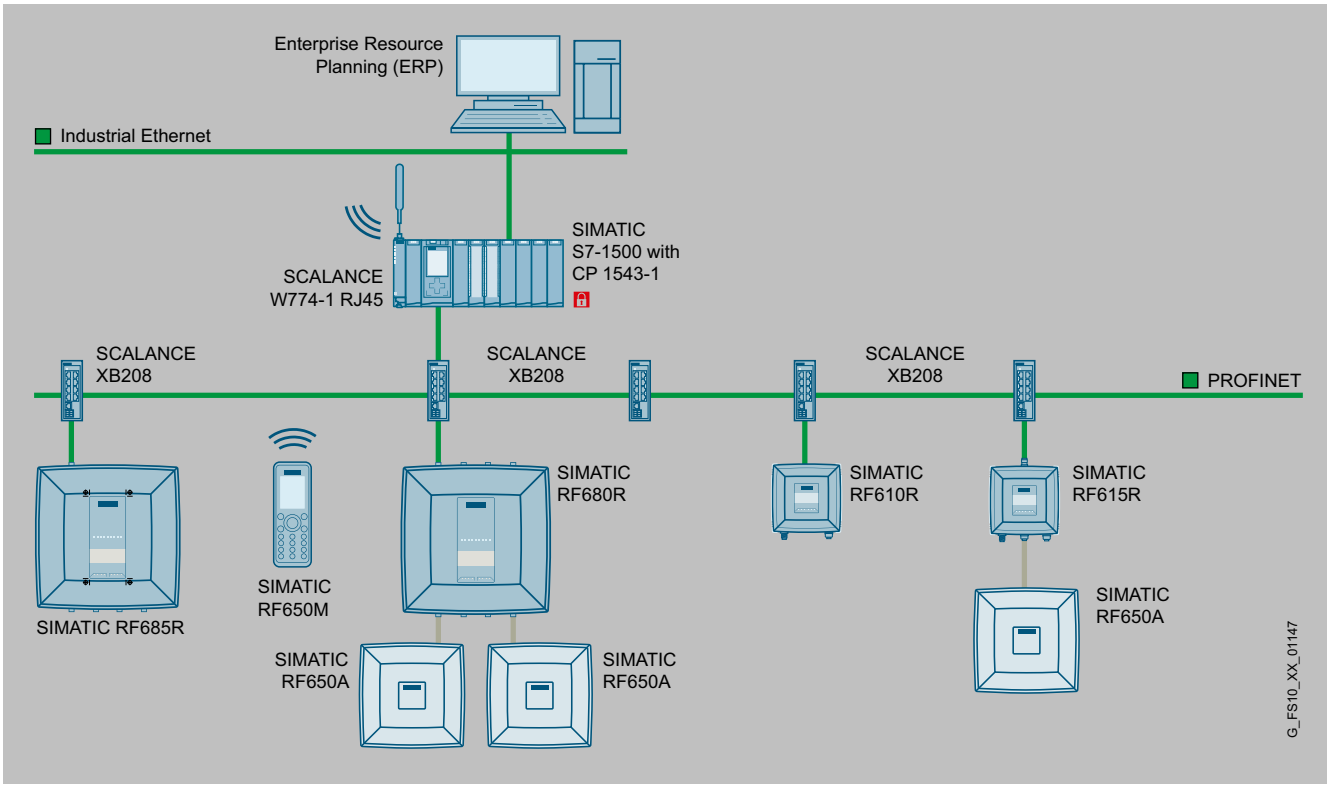

Integration of SIMATIC Ident Readers into a production network

© Siemens AG 2024

Selection and ordering data

	Article No.
Industrial Ethernet switches	
SCALANCE XB205-3 (ST) 5 x 10/100 Mbps RJ45 ports, electrical, 3 x 100 Mbps BFOC ports, optical (multimode, glass), up to 5 km	
• Default PROFINET settings	**6GK5205-3BB00-2AB2**
• Default Ethernet/IP settings	**6GK5205-3BB00-2TB2**
SCALANCE XB205-3 (SC) 5 x 10/100 Mbps RJ45 ports, electrical; 3 x 100 Mbps SC ports, optical (multimode, glass), up to 5 km	
• Default PROFINET settings	**6GK5205-3BD00-2AB2**
• Default Ethernet/IP settings	**6GK5205-3BD00-2TB2**
SCALANCE XB205-3LD (SC) 5 x 10/100 Mbps RJ45 ports, electrical; 3 x 100 Mbps BFOC ports, optical (single-mode, glass), up to 26 km	
• Default PROFINET settings	**6GK5205-3BF00-2AB2**
• Default Ethernet/IP settings	**6GK5205-3BF00-2TB2**
SCALANCE XB206-2 (ST) 6 x 10/100 Mbps RJ45 ports electrical; 2 x 100 Mbps ST(BFOC) ports, optical (multimode, glass), up to 5 km	
• Default PROFINET settings	**6GK5206-2BB00-2AB2**
SCALANCE XB206-2 (SC) 6 x 10/100 Mbps RJ45 ports electrical; 2 x 100 Mbps SC ports, optical (multimode, glass), up to 5 km	
• Default PROFINET settings	**6GK5206-2BD00-2AB2**
SCALANCE XB206-2LD (SC) 6 x 10/100 Mbps RJ45 ports electrical; 2 x 100 Mbps SC ports, optical (multimode, glass), up to 26 km	
• Default PROFINET settings	**6GK5206-2BF00-2AB2**
SCALANCE XB208 8 x 10/100 Mbps RJ45 ports, electrical;	
• Default PROFINET settings	**6GK5208-0BA00-2AB2**
• Default Ethernet/IP settings	**6GK5208-0BA00-2TB2**
SCALANCE XB213-3 (ST) 13 x 10/100 Mbps RJ45 ports, electrical; 3 x 100 Mbps BFOC ports, optical (multimode, glass), up to 5 km	
• Default PROFINET settings	**6GK5213-3BB00-2AB2**
• Default Ethernet/IP settings	**6GK5213-3BB00-2TB2**
SCALANCE XB213-3 (SC) 13 x 10/100 Mbps RJ45 ports, electrical; 3 x 100 Mbps SC ports, optical (multimode, glass), up to 5 km	
• Default PROFINET settings	**6GK5213-3BD00-2AB2**
• Default Ethernet/IP settings	**6GK5213-3BD00-2TB2**

Selection and ordering data (continued)

	Article No.
SCALANCE XB213-3LD (SC) 13 x 10/100 Mbps RJ45 ports, electrical; 3 x 100 Mbps SC ports, optical (single-mode, glass), up to 26 km	
• Default PROFINET settings	**6GK5213-3BF00-2AB2**
• Default Ethernet/IP settings	**6GK5213-3BF00-2TB2**
SCALANCE XB216 16 x 10/100 Mbps RJ45 ports electrical	
• Default PROFINET settings	**6GK5216-0BA00-2AB2**
• Default Ethernet/IP settings	**6GK5216-0BA00-2TB2**

© Siemens AG 2024

Accessories

	Article No.
SITOP compact 24 V/0.6 A 1-phase power supply with wide-range input 85 – 264 V AC/110 – 300 V DC, stabilized output voltage 24 V, rated output current value 0.6 A, slim design	**6EP1331-5BA00**
IE TP Cord RJ45/RJ45 Pre-assembled 8-core Cat6$_A$ patch cable 4 x 2, with two RJ45 plugs, preferred length	
• 0.3 m	**6XV1870-3QE30**
• 0.5 m	**6XV1870-3QE50**
• 1 m	**6XV1870-3QH10**
• 2 m	**6XV1870-3QH20**
• 3 m	**6XV1870-3QH30**
• 4 m	**6XV1870-3QH40**
• 6 m	**6XV1870-3QH60**
• 10 m	**6XV1870-3QN10**
• 15 m	**6XV1870-3QN15**
• 20 m	**6XV1870-3QN20**
• 25 m	**6XV1870-3QN25**
• 30 m	**6XV1870-3QN30**
• 35 m	**6XV1870-3QN35**
• 40 m	**6XV1870-3QN40**
• 45 m	**6XV1870-3QN45**
• 50 m	**6XV1870-3QN50**
FO standard cable GP 50/125/1400 Multimode cable, sold by the meter; max. delivery unit 1000 m, minimum order quantity 20 m, also available pre-assembled with ST/BFOC and SC plugs in various lengths	**6XV1873-2A**
SCALANCE TAP104 Test access port for the reaction-free extraction of Ethernet data frames (10/100 Mbps) from both transmission directions; extracts complete data traffic, including faulty frames, for further diagnostics.	**6GK5104-0BA00-1SA2**

© Siemens AG 2024

Technical specifications

Article number	6GK5213-3B-D00-2AB2 6GK5213-3B-D00-2TB2	6GK5213-3B-F00-2AB2 6GK5213-3B-F00-2TB2	6GK5206-2B-B00-2AB2	6GK5206-2B-B00-2TB2	6GK5206-2B-D00-2AB2	6GK5206-2B-D00-2TB2	6GK5206-2B-F00-2AB2	6GK5206-2B-F00-2TB2
product type designation								
product brand name	SCALANCE	SCALANCE	SCALANCE	SCALANCE	SCALANCE	SCALANCE	SCALANCE	SCALANCE
product type designation	XB213-3	XB213-3LD						
transfer rate								
transfer rate	10 Mbit/s, 100 Mbit/s	10 Mbit/s, 100 Mbit/s	10 Mbit/s, 100 Mbit/s	10 Mbit/s, 100 Mbit/s	10 Mbit/s, 100 Mbit/s	10 Mbit/s, 100 Mbit/s	10 Mbit/s, 100 Mbit/s	10 Mbit/s, 100 Mbit/s
interfaces for communication integrated								
number of electrical connections								
• for network components or terminal equipment	13; RJ45	13; RJ45	6; RJ45	6; RJ45	6; RJ45	6; RJ45	6; RJ45	6; RJ45
number of 100 Mbit/s ST(BFOC) ports								
• for multimode			2	2				
number of 100 Mbit/s SC ports								
• for multimode	3				2	2		
• for single mode (LD)		3					2	2
transmission method of the optical interface	100BaseFX	100BaseLX LD	100BaseFX	100BaseFX	100BaseFX	100BaseFX	100BaseLX LD	100BaseLX LD
interfaces other								
number of electrical connections								
• for operator console	1	1	1	1	1	1	1	1
• for power supply	1	1	1	1	1	1	1	1
type of electrical connection								
• for operator console	RJ11	RJ11	RJ11	RJ11	RJ11	RJ11	RJ11	RJ11
• for management purposes	RJ45	RJ45	RJ45	RJ45	RJ45	RJ45	RJ45	RJ45
supply voltage, current consumption, power loss								
product component connection for redundant voltage supply	Yes	Yes	Yes	Yes	Yes	Yes	Yes	Yes
type of voltage 1 of the supply voltage	DC	DC	DC	DC	DC	DC	DC	DC
• supply voltage 1 rated value	24 V	24 V	24 V	24 V	24 V	24 V	24 V	24 V
• power loss [W] 1 rated value	9.8 W	9.6 W	7.2 W	7.2 W	7.2 W	7.2 W	7.2 W	7.2 W
• supply voltage 1 rated value	19.2 ... 28.8 V	19.2 ... 28.8 V	19.2 ... 28.8 V	19.2 ... 28.8 V	19.2 ... 28.8 V	19.2 ... 28.8 V	19.2 ... 28.8 V	19.2 ... 28.8 V
• consumed current 1 maximum	0.41 A	0.4 A	0.3 A	0.3 A	0.3 A	0.3 A	0.3 A	0.3 A
• type of electrical connection 1 for power supply	6-pole terminal block	6-pole terminal block	6-pole terminal block	6-pole terminal block	6-pole terminal block	6-pole terminal block	6-pole terminal block	6-pole terminal block
• product component 1 fusing at power supply input	Yes	Yes	Yes	Yes	Yes	Yes	Yes	Yes
ambient conditions								
ambient temperature								
• during operation	0 ... 60 °C	0 ... 60 °C	0 ... 60 °C	0 ... 60 °C	0 ... 60 °C	0 ... 60 °C	0 ... 60 °C	0 ... 60 °C
• during storage	-40 ... +70 °C	-40 ... +70 °C	-40 ... +70 °C	-40 ... +70 °C	-40 ... +70 °C	-40 ... +70 °C	-40 ... +70 °C	-40 ... +70 °C
• during transport	-40 ... +70 °C	-40 ... +70 °C	-40 ... +70 °C	-40 ... +70 °C	-40 ... +70 °C	-40 ... +70 °C	-40 ... +70 °C	-40 ... +70 °C
relative humidity								
• at 25 °C without condensation during operation maximum	95 %	95 %	95 %	95 %	95 %	95 %	95 %	95 %
protection class IP	IP20	IP20	IP20	IP20	IP20	IP20	IP20	IP20
design, dimensions and weights								
design	compact	compact	compact	compact	compact	compact	compact	compact
width	120 mm	120 mm	80 mm	80 mm	80 mm	80 mm	80 mm	80 mm

© Siemens AG 2024

Technical specifications (continued)

Article number	6GK5213-3B-D00-2AB2 6GK5213-3B-D00-2TB2	6GK5213-3B-F00-2AB2 6GK5213-3B-F00-2TB2	6GK5206-2B-B00-2AB2	6GK5206-2B-B00-2TB2	6GK5206-2B-D00-2AB2	6GK5206-2B-D00-2TB2	6GK5206-2B-F00-2AB2	6GK5206-2B-F00-2TB2
height	117 mm	117 mm	117 mm	117 mm	117 mm	117 mm	117 mm	117 mm
depth	109 mm	109 mm	109 mm	109 mm	109 mm	109 mm	109 mm	109 mm
net weight	0.5 kg	0.5 kg	0.35 kg	0.35 kg	0.35 kg	0.35 kg	0.35 kg	0.35 kg
material of the enclosure	Polycarbonate (PC-GF10)	Polycarbonate (PC-GF10)	Polycarbonate (PC-GF10)	Polycarbonate (PC-GF10)	Polycarbonate (PC-GF10)	Polycarbonate (PC-GF10)	Polycarbonate (PC-GF10)	Polycarbonate (PC-GF10)
fastening method								
• 35 mm top hat DIN rail mounting	Yes	Yes	Yes	Yes	Yes	Yes	Yes	Yes
product features, product functions, product components general								
cascading in the case of a redundant ring at reconfiguration time of <\~0.3\~s	50	50	50	50	50	50	50	50
cascading in cases of star topology	any (depending only on signal propagation time)	any (depending only on signal propagation time)	any (depending only on signal propagation time)	any (depending only on signal propagation time)	any (depending only on signal propagation time)	any (depending only on signal propagation time)	any (depending only on signal propagation time)	any (depending only on signal propagation time)
product functions management, configuration, engineering								
product function								
• CLI	Yes	Yes	Yes	Yes	Yes	Yes	Yes	Yes
• web-based management	Yes	Yes	Yes	Yes	Yes	Yes	Yes	Yes
• MIB support	Yes	Yes	Yes	Yes	Yes	Yes	Yes	Yes
• TRAPs via email	Yes	Yes	Yes	Yes	Yes	Yes	Yes	Yes
• configuration with STEP 7	Yes	Yes	Yes	Yes	Yes	Yes	Yes	Yes
• RMON	Yes	Yes	Yes	Yes	Yes	Yes	Yes	Yes
• port mirroring	Yes	Yes	Yes	Yes	Yes	Yes	Yes	Yes
• multiport mirroring	Yes	Yes	No	No	Yes	Yes	No	No
• CoS	Yes	Yes	Yes	Yes	Yes	Yes	Yes	Yes
• PROFINET IO diagnosis	Yes	Yes	Yes	Yes	Yes	Yes	Yes	Yes
• switch-managed	Yes	Yes	Yes	Yes	Yes	Yes	Yes	Yes
PROFINET conformity class	B	B	B	B	B	B	B	B
network load class according to PROFINET	3	3	3	3			3	3
telegram length for Ethernet maximum	1 632 byte	1 632 byte	1 632 byte	1 632 byte	1 632 byte	1 632 byte	1 632 byte	1 632 byte
protocol is supported								
• Telnet	Yes	Yes	Yes	Yes	Yes	Yes	Yes	Yes
• HTTP	Yes	Yes	Yes	Yes	Yes	Yes	Yes	Yes
• HTTPS	Yes	Yes	Yes	Yes	Yes	Yes	Yes	Yes
• TFTP	Yes	Yes	Yes	Yes	Yes	Yes	Yes	Yes
• FTP	Yes	Yes	Yes	Yes	Yes	Yes	Yes	Yes
• DCP	Yes	Yes	Yes	Yes	Yes	Yes	Yes	Yes
• LLDP	Yes	Yes	Yes	Yes	Yes	Yes	Yes	Yes
• EtherNet/IP	Yes	Yes	Yes	Yes	Yes	Yes	Yes	Yes
• SNMP v1	Yes	Yes	Yes	Yes	Yes	Yes	Yes	Yes
• SNMP v2	Yes	Yes	Yes	Yes	Yes	Yes	Yes	Yes
• SNMP v3	Yes	Yes	Yes	Yes	Yes	Yes	Yes	Yes
• IGMP (snooping/querier)	Yes	Yes	Yes	Yes	Yes	Yes	Yes	Yes
identification & maintenance function								
• I&M0 - device-specific information	Yes	Yes	Yes	Yes	Yes	Yes	Yes	Yes
• I&M1 - higher level designation/location designation	Yes	Yes	Yes	Yes	Yes	Yes	Yes	Yes

© Siemens AG 2024

Technical specifications (continued)

Article number	6GK5213-3B-D00-2AB2 6GK5213-3B-D00-2TB2	6GK5213-3B-F00-2AB2 6GK5213-3B-F00-2TB2	6GK5206-2B-B00-2AB2	6GK5206-2B-B00-2TB2	6GK5206-2B-D00-2AB2	6GK5206-2B-D00-2TB2	6GK5206-2B-F00-2AB2	6GK5206-2B-F00-2TB2
product functions diagnostics								
product function								
• port diagnostics	Yes	Yes	Yes	Yes	Yes	Yes	Yes	Yes
• statistics Packet Size	Yes	Yes	Yes	Yes	Yes	Yes	Yes	Yes
• statistics packet type	Yes	Yes	Yes	Yes	Yes	Yes	Yes	Yes
• error statistics	Yes	Yes	Yes	Yes	Yes	Yes	Yes	Yes
• SysLog	Yes	Yes	Yes	Yes	Yes	Yes	Yes	Yes
product functions VLAN								
product function								
• VLAN - port based	Yes	Yes	Yes	Yes	Yes	Yes	Yes	Yes
number of VLANs maximum	257	257	257	257			257	257
number of VLANs - dynamic maximum	257	257	257	257			257	257
number of VLANs at ring redundancy (HRP; MRP; standby link)	257	257	257	257	257	257	257	257
product functions DHCP								
product function								
• DHCP client	Yes	Yes	Yes	Yes	Yes	Yes	Yes	Yes
product functions redundancy								
protocol is supported Media Redundancy Protocol (MRP)	Yes	Yes	Yes	Yes	Yes	Yes	Yes	Yes
product function								
• media redundancy protocol (MRP) with redundancy manager	Yes	Yes	Yes	Yes	Yes	Yes	Yes	Yes
• Media Redundancy Protocol Interconnection (MRP-I)	Yes	Yes	Yes	Yes	Yes	Yes	Yes	Yes
• of the PROFINET IO device is supported PROFINET system redundancy	No	No	No		No	No	No	No
• ring redundancy	Yes	Yes	Yes	Yes	Yes	Yes	Yes	Yes
• high speed redundancy protocol (HRP) with redundancy manager	Yes	Yes	Yes	Yes	Yes	Yes	Yes	Yes
• high speed redundancy protocol (HRP) with standby redundancy	Yes	Yes	Yes	Yes	Yes	Yes	Yes	Yes
• redundancy procedure STP	Yes	Yes	Yes	Yes	Yes	Yes	Yes	Yes
• redundancy procedure RSTP	Yes	Yes	Yes	Yes	Yes	Yes	Yes	Yes
• redundancy procedure RSTP+	Yes	Yes	Yes	Yes	Yes	Yes	Yes	Yes
• Parallel Redundancy Protocol (PRP)/operation in the PRP-network	No	No	No	No	No	No	No	No
• passive listening	Yes	Yes	Yes	Yes	Yes	Yes	Yes	Yes
product functions security								
product function								
• IEEE 802.1x (radius)	Yes	Yes	Yes	Yes	Yes	Yes	Yes	Yes
• broadcast/multicast/unicast limiter	Yes	Yes	Yes	Yes	Yes	Yes	Yes	Yes
• broadcast blocking	Yes	Yes	Yes	Yes	Yes	Yes	Yes	Yes
protocol is supported								
• SSH	Yes	Yes	Yes	Yes	Yes	Yes	Yes	Yes
• SSL	Yes	Yes	Yes	Yes	Yes	Yes	Yes	Yes

© Siemens AG 2024

Technical specifications (continued)

Article number	6GK5213-3B-D00-2AB2 6GK5213-3B-D00-2TB2	6GK5213-3B-F00-2AB2 6GK5213-3B-F00-2TB2	6GK5206-2B-B00-2AB2	6GK5206-2B-B00-2TB2	6GK5206-2B-D00-2AB2	6GK5206-2B-D00-2TB2	6GK5206-2B-F00-2AB2	6GK5206-2B-F00-2TB2
product functions time								
product function								
• SICLOCK support	Yes	Yes	Yes	Yes	Yes	Yes	Yes	Yes
• NTP-client	Yes	Yes	Yes	Yes	Yes	Yes	Yes	Yes
• SNTP client	Yes	Yes	Yes	Yes	Yes	Yes	Yes	Yes
protocol is supported								
• SNTP	Yes	Yes	Yes	Yes	Yes	Yes	Yes	Yes
standards, specifications, approvals								
certificate of suitability								
• CE marking	Yes	Yes	Yes	Yes	Yes	Yes	Yes	Yes
• KC approval	Yes	Yes	Yes	Yes	Yes	Yes	Yes	Yes
• Regulatory Compliance Mark (RCM)	Yes	Yes	Yes	Yes	Yes	Yes	Yes	Yes
standard								
• for safety from CSA and UL	UL 60950-1 E115352, CSA C22.2 No. 60950-1	UL 60950-1 E115352, CSA C22.2 No. 60950-1	UL 60950-1 E115352, CSA C22.2 No. 60950-1	UL 60950-1 E115352, CSA C22.2 No. 60950-1	UL 60950-1 E115352, CSA C22.2 No. 60950-1	UL 60950-1 E115352, CSA C22.2 No. 60950-1	UL 60950-1 E115352, CSA C22.2 No. 60950-1	UL 60950-1 E115352, CSA C22.2 No. 60950-1
standards, specifications, approvals hazardous environments								
certificate of suitability								
• ATEX	Yes	Yes						
• IECEx	Yes	Yes						
• CCC for hazardous zone according to GB standard	Yes	Yes	Yes	Yes	Yes	Yes	Yes	Yes
• FM registration	Yes	Yes	Yes		Yes		Yes	
standards, specifications, approvals other								
certificate of suitability								
• RoHS conformity	Yes	Yes						
IT security for industrial automation systems according to IEC 62443-4-2:2019	Yes	Yes	Yes	Yes	Yes	Yes	Yes	Yes
standards, specifications, approvals Environmental Product Declaration								
Environmental Product Declaration	Yes	Yes	Yes	Yes	Yes	Yes	Yes	Yes
Global Warming Potential [CO2 eq]								
• total	347.89 kg	341.88 kg	266.77 kg	266.77 kg	266.77 kg	266.77 kg	260.76 kg	260.76 kg
• during manufacturing	40.94 kg	40.94 kg	40.94 kg	40.94 kg	40.94 kg	40.94 kg	40.94 kg	40.94 kg
• during operation	306.44 kg	300.43 kg	225.32 kg	225.32 kg	225.32 kg	225.32 kg	219.31 kg	219.31 kg
• after end of life	0.51 kg	0.51 kg	0.51 kg	0.51 kg	0.51 kg	0.51 kg	0.51 kg	0.51 kg
product functions general								
MTBF	45 a	40 a	55 a	55 a	55 a	55 a	50 a	50 a
reference code								
• according to IEC 81346-2	KF	KF	KF	KF	KF	KF	KF	KF
• according to IEC 81346-2:2019	KFE	KFE	KFE	KFE	KFE	KFE	KFE	KFE
product function is supported identification link	Yes; according to IEC 61406-1:2022	Yes; according to IEC 61406-1:2022						
further information internet links								
internet link								
• to website: Selection guide for cables and connectors	https://support.industry.siemens.com/cs/ww/en/view/109766358	https://support.industry.siemens.com/cs/ww/en/view/109766358	https://support.industry.siemens.com/cs/ww/en/view/109766358	https://support.industry.siemens.com/cs/ww/en/view/109766358	https://support.industry.siemens.com/cs/ww/en/view/109766358	https://support.industry.siemens.com/cs/ww/en/view/109766358	https://support.industry.siemens.com/cs/ww/en/view/109766358	https://support.industry.siemens.com/cs/ww/en/view/109766358

© Siemens AG 2024

Technical specifications (continued)

Article number	6GK5213-3B-D00-2AB2 6GK5213-3B-D00-2TB2	6GK5213-3B-F00-2AB2 6GK5213-3B-F00-2TB2	6GK5206-2B-B00-2AB2	6GK5206-2B-B00-2TB2	6GK5206-2B-D00-2AB2	6GK5206-2B-D00-2TB2	6GK5206-2B-F00-2AB2	6GK5206-2B-F00-2TB2
• to web page: selection aid TIA Selection Tool	https://www.siemens.com/tst-cloud	https://www.siemens.com/tst-cloud	https://www.siemens.com/tst-cloud	https://www.siemens.com/tst-cloud	https://www.siemens.com/tst-cloud	https://www.siemens.com/tst-cloud	https://www.siemens.com/tst-cloud	https://www.siemens.com/tst-cloud
• to website: Industrial communication	https://www.siemens.com/simatic-net	https://www.siemens.com/simatic-net	https://www.siemens.com/simatic-net	https://www.siemens.com/simatic-net	https://www.siemens.com/simatic-net	https://www.siemens.com/simatic-net	https://www.siemens.com/simatic-net	https://www.siemens.com/simatic-net
• to website: Image database	https://www.automation.siemens.com/bilddb	https://www.automation.siemens.com/bilddb	https://www.automation.siemens.com/bilddb	https://www.automation.siemens.com/bilddb	https://www.automation.siemens.com/bilddb	https://www.automation.siemens.com/bilddb	https://www.automation.siemens.com/bilddb	https://www.automation.siemens.com/bilddb
• to website: CAx-Download-Manager	https://www.siemens.com/cax	https://www.siemens.com/cax	https://www.siemens.com/cax	https://www.siemens.com/cax	https://www.siemens.com/cax	https://www.siemens.com/cax	https://www.siemens.com/cax	https://www.siemens.com/cax
• to website: Industry Online Support	https://support.industry.siemens.com	https://support.industry.siemens.com	https://support.industry.siemens.com	https://support.industry.siemens.com	https://support.industry.siemens.com	https://support.industry.siemens.com	https://support.industry.siemens.com	https://support.industry.siemens.com

More information

Selection Tool:

To support the selection of SCALANCE network components, the TIA Selection Tool is available at:

www.siemens.com/tst

Ordering overview:

You can find more information on the FastConnect range in the "Cabling technology for communication networks in industry" ordering overview.

© Siemens AG 2024

Overview

The managed Industrial Ethernet switches of the SCALANCE XC-200 product line are optimized for setting up Industrial Ethernet networks with data transfer rates of 10/100/1000 Mbps as well as 2 x 10 Gbps (SCALANCE XC206-2G PoE and XC216-3G PoE only) in line, star and ring topology. More information:

- Rugged enclosure in SIMATIC S7-1500 format, for mounting on DIN rails and SIMATIC S7-300 and S7-1500 mounting rails, or for direct wall mounting
- Electrical or optical connection to stations or networks according to port characteristics of the devices
- Versions with transfer rates up to 10 Gbps optical or 1 Gbps electrical
- Combo ports for the flexible use of interfaces: A combo port consists of an electric port and an SFP slot. Only one of the two ports can ever be active. If an SFP plug-in transceiver is inserted, the electric port is deactivated
- Rugged station connections with industry-standard RJ45 plug-in connectors that offer additional strain and bending strain relief thanks to latching on the enclosure
- Redundant power supply
- Console port for direct access to device
- Display of comprehensive operating mode and status information via LEDs and selection pushbuttons
- Signaling contact for connecting to an error signaling system
- Slot for optional C-PLUG removable data storage medium for easy device replacement without additional equipment such as a Field PG
- Grounding screw for external ground connection
- Flexible use in the automation environment due to switchover between the two industry protocols PROFINET and EtherNet/IP in the device
- Extensive diagnostics options: Full integration in PROFINET and EtherNet/IP diagnostics, SNMP access, integrated web server and automatic email transmission function for remote diagnostics and signaling via the network
- Integration into the SINEC NMS Network Management System for end-to-end network diagnostics with central firmware management
- Virtual LANs (VLAN) for easy structuring of large networks into smaller, logical subnetworks. Reasons for the subdivision into logical subnetworks are, for example, separation of the Ethernet networks to reduce the broadcast load, separation of sensitive areas from the main network, and subdivision of the network into logical working groups
- By learning the multicast sources and destinations (IGMP, Internet Group Management Protocol Snooping), SCALANCE XC-200 switches can also filter multicast data traffic and thus limit the load on the network
- Integrated security functions offer protection against unauthorized network access and configuration (e.g. authentication via IEEE 802.1X/ RADIUS)
- The PoE versions support Power over Ethernet (PoE). This allows nodes such as WLAN access points (e.g. SCALANCE W) or cameras (e.g. SIMATIC MV500) to be supplied with power in addition to data. Depending on the version, the PoE switches are supplied with power either via 24 V DC or via 54 V DC.
- A PoE power budget of 120 W is available for the PoE 24 V DC versions. With the 54 V DC versions, a power budget of up to 300 W can be realized using a 54 V DC power supply. The available power budget can be distributed to the PoE ports as required. Up to 30 W power per port according to IEEE802.3at and up to 60 W power according to IEEE802.3bt are supported with 2x PoE ports
- Technical inspectorate certification according to IEC 62443-4-2 for implementing secure system architectures.

Product versions

Switches with PROFINET delivery state:

- Switches with electrical ports:
  - SCALANCE XC208;
    With 8x RJ45 ports 10/100 Mbps, for mounting in control cabinet
  - SCALANCE XC208G;
    With 8x RJ45 ports 10/100/1000 Mbps, for mounting in control cabinet
  - SCALANCE XC216;
    With 16x RJ45 ports 10/100 Mbps, for mounting in the control cabinet
  - SCALANCE XC224;
    With 24x RJ45 ports 10/100 Mbps, for mounting in the control cabinet
- Switches with electrical and optical ports:
  - SCALANCE XC206-2;
    With 6x RJ45 ports 10/100 Mbps and 2x ST/BFOC ports 100 Mbps
  - SCALANCE XC206-2;
    With 6x RJ45 ports 10/100 Mbps and 2x SC ports 100 Mbps
  - SCALANCE XC206-2SFP;
    With 6x RJ45 ports 10/100 Mbps and 2x SFP plug-in transceivers with 100 or 1000 Mbps
  - SCALANCE XC206-2SFP G;
    With 6x RJ45 ports 10/100/1000 Mbps and 2x SFP plug-in transceivers 1000 Mbps

© Siemens AG 2024

Overview (continued)

- SCALANCE XC216-4C;
  With 12x RJ45 ports 10/100 Mbps and 4x Gigabit combo ports
  (either 10/100/1000 Mbps RJ45 port or SFP plug-in transceiver 1000 Mbps can be used)
- SCALANCE XC216-4C G;
  With 12x RJ45 ports 10/100/1000 Mbps and 4x Gigabit combo ports
  (either 10/100/1000 Mbps RJ45 port or SFP plug-in transceiver 1000 Mbps can be used)
- SCALANCE XC224-4C G;
  With 20x RJ45 ports 10/100/1000 Mbps and 4x Gigabit combo ports
  (either 10/100/1000 Mbps RJ45 port or SFP plug-in transceiver 1000 Mbps can be used)

• Switches with EtherNet/IP delivery state:

- SCALANCE XC206-2SFP G;
  With 6x RJ45 ports 10/100/1000 Mbps and 2x SFP plug-in transceivers 1000 Mbps
- SCALANCE XC208G;
  With 8x RJ45 ports 10/100/1000 Mbps, for mounting in control cabinet
- SCALANCE XC216-4C G;
  With 12x RJ45 ports 10/100/1000 Mbps and 4x Gigabit combo ports
  (either 10/100/1000 Mbps RJ45 port or SFP plug-in transceiver 1000 Mbps can be used)
- SCALANCE XC224-4C G;
  With 20x RJ45 ports 10/100/1000 Mbps and 4x Gigabit combo ports
  (either 10/100/1000 Mbps RJ45 port or SFP plug-in transceiver 1000 Mbps can be used)

• PoE switches with delivery state PROFINET with 24 V DC infeed (PoE power budget 120 W):

- SCALANCE XC206-2G PoE;
  With 2x SFP ports: Support for 1000 or 10,000 Mbps SCALANCE SFPs and 6x PoE RJ45 ports 10/100/1000 Mbps,
  2x of which up to 60 W per PoE port (802.3bt) and 4x of which up to 30 W per PoE port (802.3at)
- SCALANCE XC208G PoE;
  With 2x RJ45 10/100/1000 Mbps and 6x PoE RJ45 ports 10/100/1000 Mbps,
  2x of which 60 W per PoE port (802.3bt) and 4x of which up to 30 W per PoE port (802.3at)
- SCALANCE XC216-3G PoE;
  With 3x SFP ports: 2x support for 1000 or 10,000 Mbps SCALANCE SFPs and 1x 1000 Mbps SCALANCE SFP and 2x RJ45 10/100/1000 Mbps and 14x PoE RJ45 ports 10/100/1000 Mbps, 2x of which up to 60 W per PoE port (802.3bt) and 12x of which up to 30 W per PoE port (802.3at)

• PoE switches with delivery state PROFINET with 54 V DC infeed (PoE power budget: 300 W):

- SCALANCE XC206-2G PoE;
  With 2x SFP ports: Support for 1000 or 10,000 Mbps SCALANCE SFPs and 6x PoE RJ45 ports 10/100/1000 Mbps,
  2x of which up to 60 W per PoE port (802.3bt) and 4x of which up to 30 W per PoE port (802.3at)
- SCALANCE XC208G PoE;
  with 2x RJ45 10/100/1000 Mbps and 6x PoE RJ45 ports 10/100/1000 Mbps,
  2x of which up to 60 W per PoE port (802.3bt) and 4x of which up to 30 W per PoE port (802.3at)
- SCALANCE XC216-3G PoE;
  With 3x SFP ports: 2x support for 1000 or 10,000 Mbps SCALANCE SFPs and 1x 1000 Mbps SCALANCE SFP and 2x RJ45 10/100/1000 Mbps and 14x PoE RJ45 ports 10/100/1000 Mbps, 2x of which up to 60 W per PoE port (802.3bt) and 12x of which up to 30 W per PoE port (802.3at)

© Siemens AG 2024

Overview (continued)

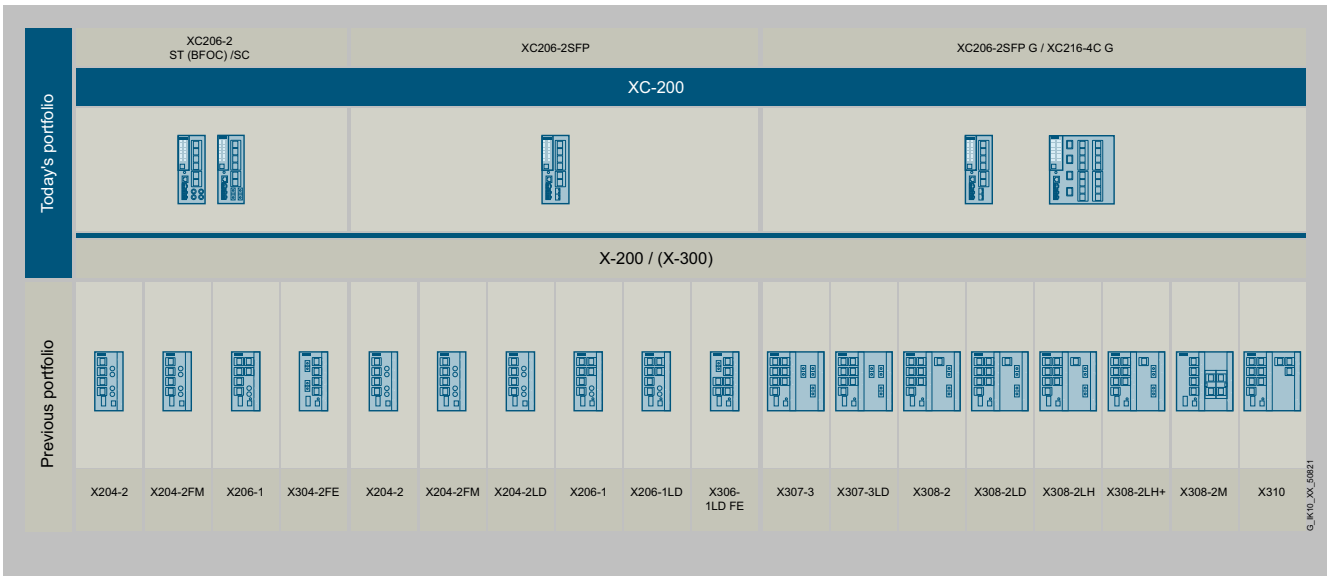

Migration from SCALANCE X-200/X-300 to the new SCALANCE XC-200 portfolio – Part 1

Migration from SCALANCE X-200/X-300 to the new SCALANCE XC-200 portfolio – Part 2

© Siemens AG 2024

Benefits

get Designed for Industry

- Operational reliability in industrial environments, e.g. due to rugged enclosure, redundancy, temperature range from -40 °C to +70 °C
- Increased plant availability thanks to:
  - Redundant power supply
  - Redundant network structures based on fast media redundancy HRP and MRP
  - Standby redundancy between HRP rings
  - Redundant coupling of MRP rings with MRP interconnection
  - Prevention of loops by standard STP, RSTP and MSTP mechanisms, and loop detection
  - Improved reconfiguration times for redundant connection of MRP rings in RSTP networks through RSTP+ function
  - SFP plug-in transceivers can be replaced or expanded during operation
  - Easy device replacement by means of plug-in C-PLUG removable data storage medium
  - Link aggregation (IEEE 802.3ad) for parallel use of ports to increase transfer rate and failure safety
- Easy monitoring and diagnostics due to separate diagnostics station with integrated LEDs, signaling contact, web browser, traps and email transmission
- Integration into the SINEC NMS network management system for integrated network diagnostics with central firmware management
- Reduced engineering expenditure for PLC/HMI due to integration into the SIMATIC system fault message concept
- Configuration in the TIA Portal as well as in web-based management (WBM)
- Easy integration in process and system diagnostics with PROFINET or EtherNet/IP
- Integration of SCALANCE XC-200 switches in existing network management systems, such as SINEC NMS, through SNMP access
- Easy integration in the process and system diagnostics with PROFINET via SIMATIC PCS 7 and PCS neo
- Reliable plug-in connection thanks to rugged, industry-standard device connection in conjunction with industry-standard FastConnect connectors
- Integration of switches through support of S2 system redundancy and H-Sync in SIMATIC S7-1500R/H systems
- Easy and cost-saving supply of connected cameras (e.g. SIMATIC MV500 IP or Ident cameras), WLAN access points (e.g. SCALANCE W) or localization components (e.g. SIMATIC RTLS gateways) with data and power on a single cable by using the PoE standard (Power over Ethernet, PoE versions)
- Optimal use of PoE power budget through PoE Power Management. The available PoE power budget can be distributed by the user to the PoE ports as desired
- Realization of high-performance networks over long distances

Application

SCALANCE XC-200 Industrial Ethernet switches enable cost-effective configuration of Industrial Ethernet line, star or ring topologies with switching functionality for networks in which high availability or remote diagnostic capabilities are required. The devices with degree of protection IP20 are designed for operation in the control cabinet.

Features:

- Integrated industrial network for data, voice, video, and Industrial Ethernet
- Integrated system diagnostics with PROFINET or EtherNet/IP, SINEC NMS, Syslog, and SNMP
- Use in the SIMATIC environment
- Integrated security functions offer protection against unauthorized network access and configuration, see technical specifications
- The devices are released for SIMATIC PCS 7 and PCS neo and are integration-capable
- With the PoE variants, simple data and power supply via the Ethernet cable to the connected end devices is also possible. In addition, high-performance networks can be implemented over long distances with 2x 10 Gbps SFP ports

© Siemens AG 2024

Design

SCALANCE XC-200 Industrial Ethernet switches with a rugged enclosure are optimized for mounting on DIN rails and SIMATIC S7-1500 DIN rails Direct wall mounting in various positions and mounting on a SIMATIC S7-300 DIN rail are also possible. Thanks to the SIMATIC S7-1500 enclosure dimensions, the devices are ideally suited for integration into an automation solution with SIMATIC S7-1500 components.

The network access points with IP20 degree of protection feature:

- A 4-pin terminal block (push-in) for connecting the redundant supply voltage (2 x 24 V DC)
- The following status information is displayed by LEDs on site:
  - Port status
  - Port mode (10/100/1000 Mbps, full/half-duplex)
  - Status of the two power supplies
  - Signaling contact status
  - Signal mask (setpoint status)
  - Redundancy manager mode (RM mode)
  - Standby mode
- A 2-pin terminal block (push-in) for connecting the floating signaling contact
- A SELECT/SET button for on-site configuration of the signaling contact

SCALANCE XC-200 switches are available with the following port types:

- 10/100/1000BASETX, RJ45 connection;

  Automatic detection of data transmission rate (10, 100 or 1000 Mbps), with autosensing and autocrossover function for connecting IE FC cables via IE FC RJ45 plugs over distances up to 100 m.
- 100BASEFX, ST/BFOC connection system (SCALANCE XC-206-2);

  ST/BFOC ports for direct connection to Industrial Ethernet glass fiber-optic cables up to 5 km (multimode FOC)
- 100BASEFX, SC connection system (SCALANCE XC-206-2);

  SC ports for direct connection to Industrial Ethernet glass fiber-optic cables up to 5 km (multimode FOC)
- SFP slots for 100BASE-X, 1000BASE-X, 10GBASE-X

  LC connections with different ranges can be implemented via SFP modules (multimode/single-mode up to 200 km)
- In the PoE versions, the SFP interfaces of the combo ports support both 1,000 Mbps SFPs and 10,000 Mbps SFP+

© Siemens AG 2024

Function

- Setup of electrical and optical Industrial Ethernet line, star and ring topologies
  - Use in ring topologies together with SCALANCE X-200, SCALANCE X-300, SCALANCE XM-400 and XR-500
- Fast redundancy in the ring with:
  - High Speed Redundancy Protocol (HRP); up to 0.3 seconds for reconfiguration of the ring with 50 switches in the ring
  - PROFINET MRP (Media Redundancy Protocol); up to 0.2 seconds for reconfiguration of the ring with 50 switches in the ring
  - Redundant coupling of MRP rings through MRP interconnection function
  - Redundant connection of MRP rings in RSTP networks through RSTP+ function
- The functioning of the ring is continuously monitored by the integrated redundancy manager. It recognizes transmission link failures in the ring or failure of a SCALANCE X Industrial Ethernet switch and activates the substitute link within 0.3 seconds or 0.2 seconds with MRP
- Uncrossed connecting cables can be used due to autocrossover function integrated in the ports
- Easy diagnostics using signaling contact, SNMP and web browser
- Easy copper cable diagnostics via web browser for localizing cable breaks
- Fiber monitoring: Easy fiber-optic cable port diagnostics by means of web browser and SNMP for early detection of changes on the fiber-optic cable line or at the fiber-optic cable ports
- Integration into the diagnostics of a PROFINET controller with expanded diagnostics functions for a consistent diagnostics concept, including network infrastructure
- Diagnostics of data traffic by means of a parameterizable mirror port with a standard commercial network analyzer
- Optimized support of PROFINET real-time communication (RT) through prioritizing
- Fast device replacement in the event of a fault by using the optional C-PLUG removable data storage medium (not included in scope of supply)
- Redundant interfacing to company networks

  The SCALANCE XC-200 switches support the standardized redundancy procedures Spanning Tree Protocol (STP) and Rapid Spanning Tree Protocol (RSTP). This enables a subnetwork to be connected redundantly to a higher level corporate network with reduced requirements for the reconfiguration time (in the order of seconds)
- Support of virtual LANs (VLANs)

  For structuring Industrial Ethernet networks with a fast growing number of nodes, a physically existing network can be divided into several logical networks
- Load limiting with use of multicast protocols (e.g. querier, video)

  By learning the multicast sources and targets (IGMP snooping), XC-200 switches can also filter multicast data traffic and therefore limit the load in the network. Multicast and broadcast traffic can be limited.
- Easy connection of PoE terminal devices such as IP cameras or access points using the PoE function and implementation of high-performance networks over long distances (PoE versions only)

Network topology and network configuration

The SCALANCE XC-200 Industrial Ethernet switches with IP20 degree of protection are usually installed in a control cabinet together with the stations to be connected. Electrical and optical versions can be installed together in star, line and ring topologies.

The following network structures and combinations of structures can be implemented:

- Fast Ethernet and Gigabit rings with fast media redundancy
- Improved reconfiguration times for redundant connection of MRP rings in RSTP networks through RSTP+ function
- Star topology with XC-200 switches

  Each SCALANCE XC-200 switch represents a neutral point which can interconnect as many as 8/16/24 nodes or subnetworks.

When configuring the network, the following boundary conditions must be observed:

- Maximum cable length for twisted pair:
  - Max. 100 m with Industrial Ethernet FC cable and Industrial Ethernet FC plugs
  - Max. 10 m using patches with TP cord
- Length of the optical cables:
  - Maximum cable length between two modules for multimode fiber-optic cables:
    – 5000 m at 100 Mbps
    – 750 m at 1 Gbps
  - Maximum cable length between two modules for single-mode fiber-optic cables:
    – 200 km at 100 Mbps
    – 120 km at 1 Gbps
- IP address:

  The IP address can be assigned by means of the DHCP (Dynamic Host Configuration Protocol). If there is no corresponding server in the network, the IP address can be assigned using the supplied software tool SINEC PNI (Primary Network Initialization) or STEP 7 / TIA Portal. Assignment via the local console port is also possible

© Siemens AG 2024

Function (continued)

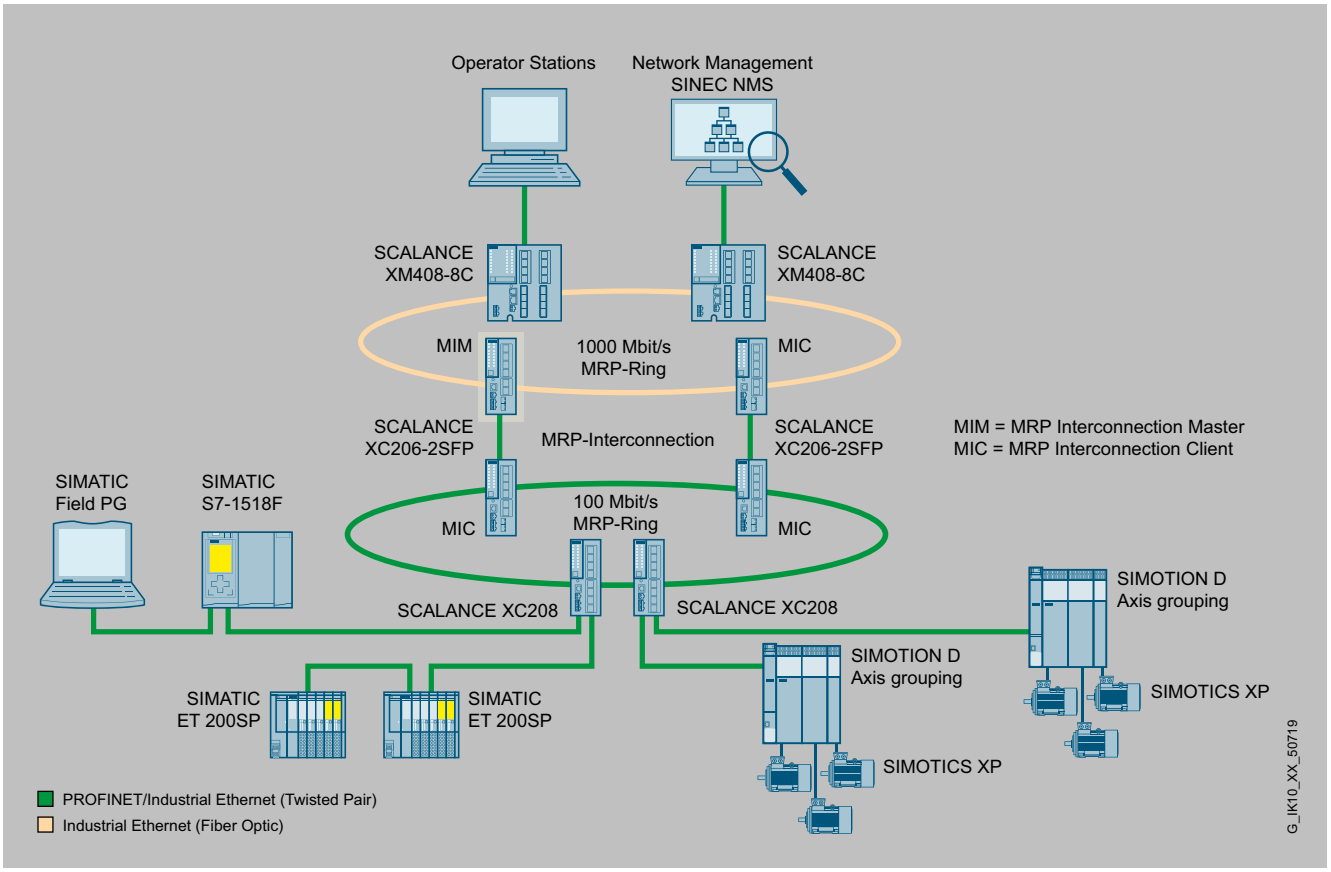

High network availability by coupling redundant MRP rings with MRP interconnection

© Siemens AG 2024

Function (continued)

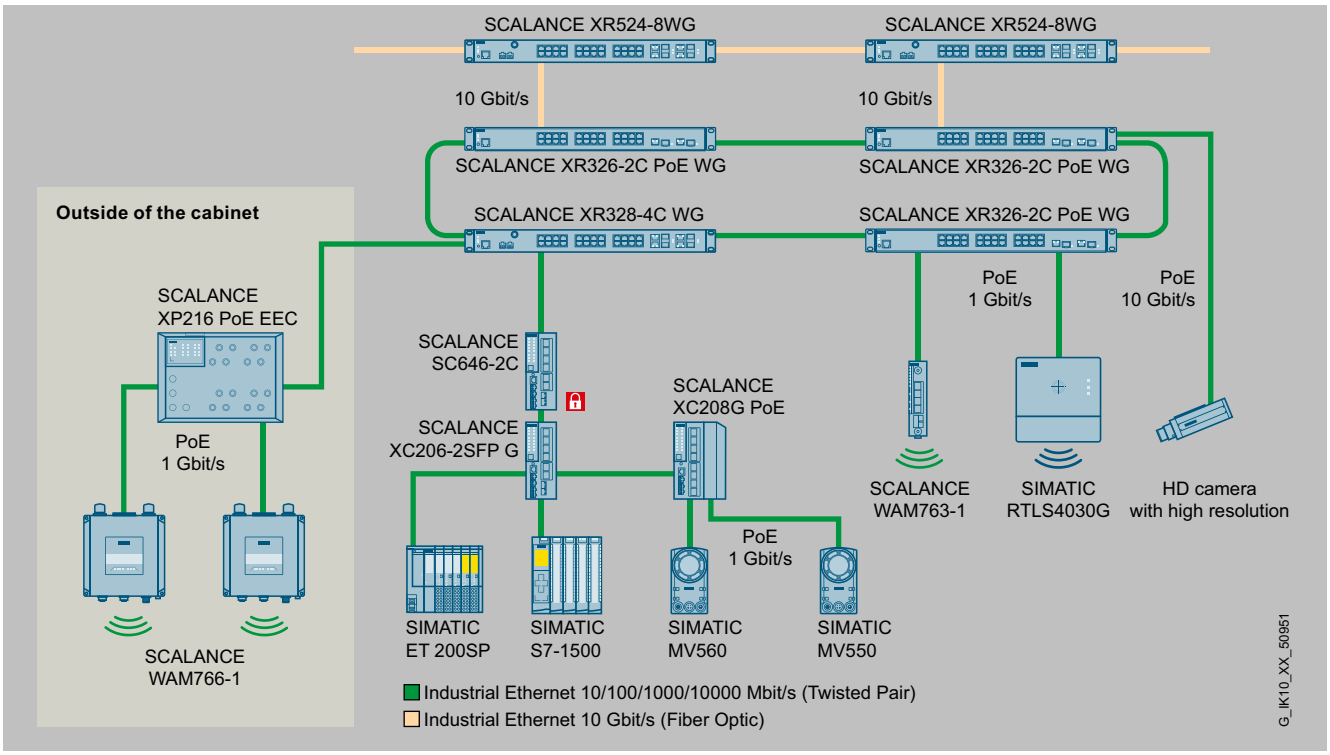

Supply of data and power to PoE-enabled terminal devices via SCALANCE XC-200PoE (Power over Ethernet).

© Siemens AG 2024

Function (continued)

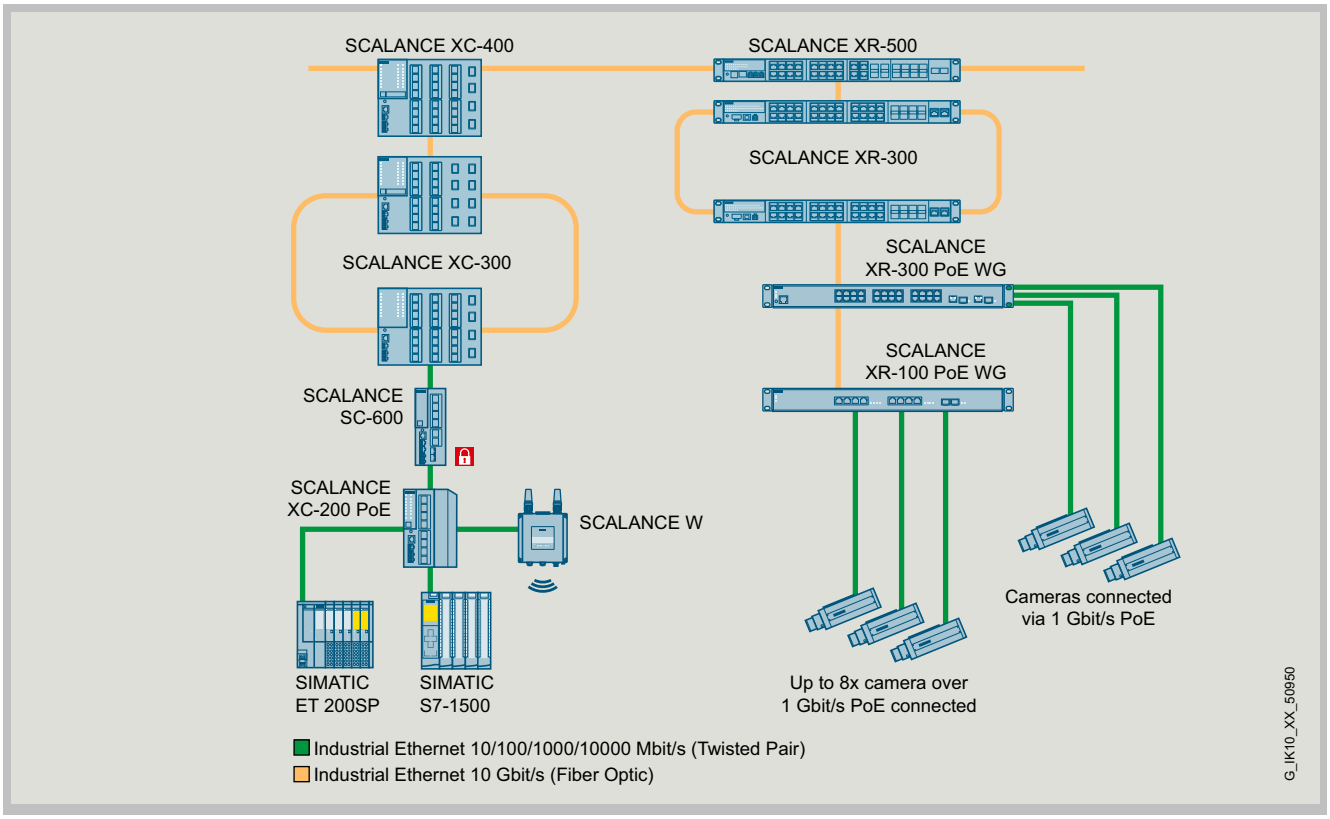

Up to 10 Gbps bandwidth for demanding applications with SCALANCE XC-200PoE

Commissioning and diagnostics

PROFINET diagnostic interrupts from SCALANCE XC-200 switches can be displayed with the appropriate SIMATIC engineering tools and processed in the PLC with the enhanced diagnostic function. The engineering outlay for the PLC and HMI has been drastically reduced due to the complete integration in the SIMATIC concept for system error messages.

SCALANCE XC-200 Industrial Ethernet switches can also be integrated in a network management system such as SINEC NMS using the standardized Simple Network Management Protocol (SNMP). In the event of faults in the device, error messages (SNMP traps) can be sent to a network management system such as SINEC NMS or as an email to a specified network administrator.

The integrated web server enables configuration and diagnostics settings to be made using a standard web browser (e.g. port configuration). Statistical information can also be read out via the web server (e.g. port utilization).

The following information is displayed on site by LEDs:

- Power
- Port status
- Data traffic
- Signaling contact
- Redundancy manager function (RM)

The Industrial Ethernet switches of the SCALANCE XC-200 line can also be monitored using the floating signaling contact.

© Siemens AG 2024

Selection and ordering data

	Article No.
SCALANCE XC-200 Industrial Ethernet switches Industrial Ethernet switches with integrated SNMP access, web diagnostics, copper cable diagnostics and PROFINET diagnostics for configuring line, star and ring topologies; with integrated redundancy manager; incl. operating instructions, Industrial Ethernet network manual and configuration software on CD-ROM	
Switches with PROFINET delivery state	
• **SCALANCE XC206-2 (ST/BFOC)** With six RJ45 ports 10/100 Mbps and two ST/BFOC ports 100 Mbps	6GK5206-2BB00-2AC2
• **SCALANCE XC206-2 (SC)** With six RJ45 ports 10/100 Mbps and two SC ports 100 Mbps	6GK5206-2BD00-2AC2
• **SCALANCE XC206-2SFP** With six RJ45 ports 10/100 Mbps and two SFP slots for SFPs with 100 or 1000 Mbps	6GK5206-2BS00-2AC2
• **SCALANCE XC206-2SFP G** With six RJ45 ports 10/100/1000 Mbps and two SFP slots for SFPs with 1000 Mbps	6GK5206-2GS00-2AC2
• **SCALANCE XC208** With eight RJ45 ports 10/100 Mbps	6GK5208-0BA00-2AC2
• **SCALANCE XC208G** With eight RJ45 ports 10/100/1000 Mbps	6GK5208-0GA00-2AC2
• **SCALANCE XC216** With 16 RJ45 ports 10/100 Mbps	6GK5216-0BA00-2AC2
• **SCALANCE XC224** With 24 RJ45 ports 10/100 Mbps	6GK5224-0BA00-2AC2
• **SCALANCE XC206-2SFP G** With six RJ45 ports 10/100/1000 Mbps and two SFP slots for SFPs with 1000 Mbps	6GK5206-2GS00-2TC2
• **SCALANCE XC208G** With eight RJ45 ports 10/100/1000 Mbps	6GK5208-0GA00-2TC2
• **SCALANCE XC216-4C** With 12 RJ45 ports 10/100 Mbps	6GK5216-4BS00-2AC2
• **SCALANCE XC216-4C G** With 12 RJ45 ports 10/100/1000 Mbps	6GK5216-4GS00-2AC2
• **SCALANCE XC216-4C G (E/IP Def.)** With 12 RJ45 ports 10/100/1000 Mbps	6GK5216-4GS00-2TC2
• **SCALANCE XC224-4C G** With 20 RJ45 ports 10/100/1000 Mbps	6GK5224-4GS00-2AC2

Selection and ordering data (continued)

	Article No.
• **SCALANCE XC224-4C G (E/IP Def.)** With 20 RJ45 ports 10/100/1000 Mbps	6GK5224-4GS00-2TC2
• **SCALANCE XC206-2G PoE** With 6 PoE RJ45 ports 10/100/1000 Mbps and 2 SFP ports (24 V DC)	6GK5206-2RS00-2AC2
• **SCALANCE XC206-2G PoE** With 6 PoE RJ45 ports 10/100/1000 Mbps and 2 SFP ports (54 V DC)	6GK5206-2RS00-5AC2
• **SCALANCE XC208G PoE** With 6 PoE RJ45 ports 10/100/1000 Mbps and 2 RJ45 ports 10/100/1000 Mbps (24 V)	6GK5208-0RA00-2AC2
• **SCALANCE XC208G PoE (54 V)** With 6 PoE RJ45 ports 10/100/1000 Mbps and 2 RJ45 ports 10/100/1000 Mbps (54 V)	6GK5208-0RA00-5AC2
• **SCALANCE XC216-3G PoE** With 14 PoE RJ45 ports 10/100/1000 Mbps and 2 RJ45 ports 10/100/1000 Mbps	6GK5216-3RS00-2AC2
• **SCALANCE XC216-3G PoE (54 V)** With 14 PoE RJ45 ports 10/100/1000 Mbps and 2 RJ45 ports 10/100/1000 Mbps (54 V)	6GK5216-3RS00-5AC2

© Siemens AG 2024

Accessories

	Article No.
S7-1500 PM 1507 power supply SIMATIC PM 1507 24 V/8 A stabilized power supply for SIMATIC S7-1500 Input: 120/230 V AC Output: 24 V DC/8 A	6EP1333-4BA00
SITOP PSU100E power supply Stabilized power supply Input: 120 / 230 V AC Output: 48 V DC/5 A	6EP3344-0SB00-0AY0
RUGGEDCOM RPS1300 PoE power supply Stabilized power supply for RUGGEDCOM Power over Ethernet (PoE) Input: 120/230 V AC Output: 54 V DC/2.6 A	6GK6000-8HS01-0AA0
SCALANCE PSR9230 PoE power supply Stabilized power supply for Power over Ethernet (PoE) Input: 230 V AC Output: 54 V DC	6GK5923-0PS00-2RA3
C-PLUG Removable data storage medium for simple replacement of devices in the event of a fault; for storing configuration or engineering and application data; can be used in SIMATIC NET products with C-PLUG slot	
• 1 pack = 1 unit	6GK1900-0AB10
IE FC RJ45 plug 180 2 x 2 Industrial Ethernet FastConnect RJ45 plug 180 2x2, RJ45 connector (10/100 Mbps) with rugged metal enclosure and FC connection technology, for IE FC cable 2x2 180° cable outlet 1 pack = 1 unit	6GK1901-1BB10-2AA0
IE FC RJ45 plug 4 x 2 RJ45 plug-in data connector (10/100/1000/10000 Mbps), for connection to IE FC TP cables 4x2, with rugged metal enclosure and FastConnect connection technology	6GK1901-1BB12-2AA0
IE FC TP standard cable GP 2 x 2 (type A) 4-core, shielded TP installation cable for connection to IE FC RJ45 outlet/IE FC RJ45 plug; PROFINET-compatible; with UL approval; sold by the meter; max. delivery unit 1000 m, minimum order quantity 20 m, also available as preassembled cable with RJ45 plugs in various lengths	6XV1840-2AH10
IE FC TP standard cable GP 4 x 2 TP installation cable Cat6 for connecting to IE FC RJ45 plug 4x2, AWG 24, sold by the meter; max. delivery unit 1000 m, minimum order quantity 20 m, also available preassembled with RJ45 plugs in various lengths	6XV1878-2A

Accessories (continued)

	Article No.
FO standard cable GP 50/125/1400 Multimode cable, sold by the meter; max. delivery unit 1000 m, minimum order quantity 20 m, also available preassembled with ST/BFOC, SC and LC connectors in various lengths	6XV1873-2A
Small Form-Factor Pluggable (SFP) SFPs with LC connection for use in SCALANCE XC206-2G PoE; glass fiber-optic SFPs in single-mode and multimode, 1000 or 10000 Mbps	
• **SFP993-1, 1x 10 Gbps, multimode**	6GK5993-1AT00-8AA0
• **SFP993-1LD, 1x 10 Gbps, single-mode**	6GK5993-1AU00-8AA0
• **SFP993-1LH, 1x 10 Gbps, single-mode**	6GK5993-1AV00-8AA0
• **Preassembled IE cable with 2x SFPs, 1 m**	6GK5980-3CB00-0AA1
• **Preassembled IE cable with 2x SFPs, 2 m**	6GK5980-3CB00-0AA2
• **Preassembled IE cable with 2x SFPs, 3 m**	6GK5980-3CB00-0AA7
See accessories for SCALANCE XC-200 for further 1 Gbps SFPs	
SCALANCE TAP104 Test access port for the reaction-free extraction of Ethernet data frames (10/100 Mbps) from both transmission directions; extracts complete data traffic, including faulty frames, for further diagnostics.	6GK5104-0BA00-1SA2

© Siemens AG 2024

Technical specifications

Article number	6GK5208-0BA00-2A-C2	6GK5216-0BA00-2A-C2	6GK5224-0BA00-2A-C2	6GK5208-0GA00-2A-C2	6GK5208-0GA00-2T-C2
product type designation					
product brand name	SCALANCE	SCALANCE	SCALANCE	SCALANCE	SCALANCE
product type designation	XC208	XC216	XC224	XC208G	XC208G (E/IP def.)
transfer rate					
transfer rate	10 Mbit/s, 100 Mbit/s	10 Mbit/s, 100 Mbit/s	10 Mbit/s, 100 Mbit/s	10 Mbit/s, 100 Mbit/s, 1 000 Mbit/s	10 Mbit/s, 100 Mbit/s, 1 000 Mbit/s
interfaces for communication integrated					
number of electrical connections					
• for network components or terminal equipment	8; RJ45	16; RJ45	24; RJ45	8; RJ45	8; RJ45
number of 10/100 Mbit/s RJ45 ports					
• with securing collar	8	16	24		
number of 10/100/1000 Mbit/s RJ45 ports					
• with securing collar				8	8
interfaces other					
number of electrical connections					
• for operator console	1	1	1	1	1
• for signaling contact	1	1	1	1	1
• for power supply	1	1	1	1	1
type of electrical connection					
• for operator console	RJ11	RJ11	RJ11	RJ11	RJ11
• for signaling contact	2-pole terminal block	2-pole terminal block	2-pole terminal block	2-pole terminal block	2-pole terminal block
• for power supply	4-pole terminal block	4-pole terminal block	4-pole terminal block	4-pole terminal block	4-pole terminal block
design of the removable storage					
• C-PLUG	Yes	Yes	Yes	Yes	Yes
operating voltage of the signaling contacts					
• at DC rated value	24 V	24 V	24 V	24 V	24 V
operational current of the signaling contacts					
• at DC maximum	0.1 A	0.1 A	0.1 A	0.1 A	0.1 A
supply voltage, current consumption, power loss					
product component connection for redundant voltage supply	Yes	Yes	Yes	Yes	Yes
type of voltage 1 of the supply voltage	DC	DC	DC	DC	DC
• supply voltage 1 rated value	24 V	24 V	24 V	24 V	24 V
• power loss [W] 1 rated value	4.2 W	6.6 W	9 W	4.3 W	4.3 W
• consumed current 1 at rated supply voltage maximum	0.175 A	0.275 A	0.375 A	0.26 A	0.26 A
• supply voltage 1 rated value	9.6 ... 31.2 V	9.6 ... 31.2 V	9.6 ... 31.2 V	9.6 ... 31.2 V	9.6 ... 31.2 V
• consumed current 1 maximum	0.35 A	0.55 A	0.75 A	0.36 A	0.36 A
• type of electrical connection 1 for power supply	4-pole terminal block	4-pole terminal block	4-pole terminal block	4-pole terminal block	4-pole terminal block
• product component 1 fusing at power supply input	Yes	Yes	Yes	Yes	Yes
• fuse protection type 1 at input for supply voltage	2.5 A / 125 V	2.5 A / 125 V	2.5 A / 125 V	2.5 A / 125 V	2.5 A / 125 V
ambient conditions					
ambient temperature					
• during operation	-40 ... +70 °C	-40 ... +70 °C	-40 ... +70 °C	-40 ... +70 °C	-40 ... +70 °C

© Siemens AG 2024

Technical specifications (continued)

Article number	6GK5208-0BA00-2A-C2	6GK5216-0BA00-2A-C2	6GK5224-0BA00-2A-C2	6GK5208-0GA00-2A-C2	6GK5208-0GA00-2T-C2
• during storage	-40 ... +85 °C	-40 ... +85 °C	-40 ... +85 °C	-40 ... +85 °C	-40 ... +85 °C
• during transport	-40 ... +85 °C	-40 ... +85 °C	-40 ... +85 °C	-40 ... +85 °C	-40 ... +85 °C
relative humidity					
• at 25 °C without condensation during operation maximum	95 %	95 %	95 %	95 %	95 %
protection class IP	IP20	IP20	IP20	IP20	IP20
design, dimensions and weights					
design	compact	compact	compact	compact	compact
width	60 mm	120 mm	120 mm	60 mm	60 mm
height	147 mm	147 mm	147 mm	147 mm	147 mm
depth	125 mm	125 mm	125 mm	125 mm	125 mm
net weight	0.52 kg	0.8 kg	0.88 kg	0.52 kg	0.52 kg
material of the enclosure	Polycarbonate (PC-GF10) / pressure die cast aluminum	Polycarbonate (PC-GF10) / pressure die cast aluminum	Polycarbonate (PC-GF10) / pressure die cast aluminum	Polycarbonate (PC-GF10) / pressure die cast aluminum	Polycarbonate (PC-GF10) / pressure die cast aluminum
fastening method					
• 35 mm top hat DIN rail mounting	Yes	Yes	Yes	Yes	Yes
• wall mounting	Yes	Yes	Yes	Yes	Yes
• S7-300 rail mounting	Yes	Yes	Yes	Yes	Yes
• S7-1500 rail mounting	Yes	Yes	Yes	Yes	Yes
product features, product functions, product components general					
cascading in the case of a redundant ring at reconfiguration time of <\~0.3\~s	50	50	50	50	50
cascading in cases of star topology	any (depending only on signal propagation time)	any (depending only on signal propagation time)	any (depending only on signal propagation time)	any (depending only on signal propagation time)	any (depending only on signal propagation time)
product function					
• QoS according to DSCP	Yes	Yes	Yes	Yes	Yes
product feature					
• Cut Through switching method	No	No	No	No	No
• Store & Forward switching method	Yes	Yes	Yes	Yes	Yes
product functions management, configuration, engineering					
product function					
• CLI	Yes	Yes	Yes	Yes	Yes
• web-based management	Yes	Yes	Yes	Yes	Yes
• MIB support	Yes	Yes	Yes	Yes	Yes
• TRAPs via email	Yes	Yes	Yes	Yes	Yes
• configuration with STEP 7	Yes	Yes	Yes	Yes	Yes
• RMON	Yes	Yes	Yes	Yes	Yes
• SMTP server	No	No	No	No	No
• port mirroring	Yes	Yes	Yes	Yes	Yes
• multiport mirroring	Yes	Yes	Yes	Yes	Yes
• CoS	Yes	Yes	Yes	Yes	Yes
• PROFINET IO diagnosis	Yes	Yes	Yes	Yes	Yes
• switch-managed	Yes	Yes	Yes	Yes	Yes
PROFINET conformity class	B	B	B	B	B

© Siemens AG 2024

Technical specifications (continued)

Article number	6GK5208-0BA00-2A-C2	6GK5216-0BA00-2A-C2	6GK5224-0BA00-2A-C2	6GK5208-0GA00-2A-C2	6GK5208-0GA00-2T-C2
network load class according to PROFINET				3	3
telegram length for Ethernet maximum	1 632 byte	1 632 byte	1 632 byte	10 240 byte	10 240 byte
protocol is supported					
• Telnet	Yes	Yes	Yes	Yes	Yes
• HTTP	Yes	Yes	Yes	Yes	Yes
• HTTPS	Yes	Yes	Yes	Yes	Yes
• TFTP	Yes	Yes	Yes	Yes	Yes
• BOOTP	No	No	No	No	No
• GMRP	Yes	Yes	Yes	Yes	Yes
• DCP	Yes	Yes	Yes	Yes	Yes
• LLDP	Yes	Yes	Yes	Yes	Yes
• EtherNet/IP	Yes	Yes	Yes	Yes	Yes
• SNMP v1	Yes	Yes	Yes	Yes	Yes
• SNMP v2	Yes	Yes	Yes	Yes	Yes
• SNMP v3	Yes	Yes	Yes	Yes	Yes
• IGMP (snooping/querier)	Yes	Yes	Yes	Yes	Yes
identification & maintenance function					
• I&M0 - device-specific information	Yes	Yes	Yes	Yes	Yes
• I&M1 - higher level designation/location designation	Yes	Yes	Yes	Yes	Yes
product functions diagnostics					
product function					
• port diagnostics	Yes	Yes	Yes	Yes	Yes
• statistics Packet Size	Yes	Yes	Yes	Yes	Yes
• statistics packet type	Yes	Yes	Yes	Yes	Yes
• error statistics	Yes	Yes	Yes	Yes	Yes
• SysLog	Yes	Yes	Yes	Yes	Yes
product functions VLAN					
product function					
• VLAN - port based	Yes	Yes	Yes	Yes	Yes
• VLAN - protocol-based	No	No	No	No	No
• VLAN - IP-based	No	No	No	No	No
number of VLANs maximum	257	257	257	257	257
number of VLANs - dynamic maximum	257	257	257	257	257
number of VLANs at ring redundancy (HRP; MRP; standby link)	257	257	257	257	257
product functions DHCP					
product function					
• DHCP server	Yes	Yes	Yes	Yes	Yes
• DHCP client	Yes	Yes	Yes	Yes	Yes
• DHCP Option 82	Yes	Yes	Yes	Yes	Yes
• DHCP Option 66	Yes	Yes	Yes	Yes	Yes
• DHCP Option 67	Yes	Yes	Yes	Yes	Yes
product functions redundancy					
protocol is supported Media Redundancy Protocol (MRP)	Yes	Yes	Yes	Yes	Yes
product function					

© Siemens AG 2024

Technical specifications (continued)

Article number	6GK5208-0BA00-2A-C2	6GK5216-0BA00-2A-C2	6GK5224-0BA00-2A-C2	6GK5208-0GA00-2A-C2	6GK5208-0GA00-2T-C2
• media redundancy protocol (MRP) with redundancy manager	Yes	Yes	Yes	Yes	Yes
• Media Redundancy Protocol Interconnection (MRP-I)	Yes	Yes	Yes	Yes	Yes
• of the PROFINET IO device is supported H-Sync forwarding	Yes	Yes	Yes	Yes	Yes
• of the PROFINET IO device is supported PROFINET system redundancy	Yes	Yes	Yes	Yes	Yes
• ring redundancy	Yes	Yes	Yes	Yes	Yes
• high speed redundancy protocol (HRP) with redundancy manager	Yes	Yes	Yes	Yes	Yes
• high speed redundancy protocol (HRP) with standby redundancy	Yes	Yes	Yes	Yes	Yes
• redundancy procedure STP	Yes	Yes	Yes	Yes	Yes
• redundancy procedure RSTP	Yes	Yes	Yes	Yes	Yes
• redundancy procedure RSTP+	Yes	Yes	Yes	Yes	Yes
• redundancy procedure MSTP	Yes	Yes	Yes	Yes	Yes
• Parallel Redundancy Protocol (PRP)/operation in the PRP-network	Yes	Yes	Yes	Yes	Yes
• Parallel Redundancy Protocol (PRP)/Redundant Network Access (RNA)	No	No	No	No	No
• passive listening	Yes	Yes	Yes	Yes	Yes
protocol is supported					
• LACP	Yes	Yes	Yes	Yes	Yes
system modification during operation					
product function configuration in RUN via CiR/H-CiR	Yes	Yes	Yes	Yes	Yes
product functions security					
product function					
• IEEE 802.1x (radius)	Yes	Yes	Yes	Yes	Yes
• broadcast/multicast/unicast limiter	Yes	Yes	Yes	Yes	Yes
• broadcast blocking	Yes	Yes	Yes	Yes	Yes
protocol is supported					
• SSH	Yes	Yes	Yes	Yes	Yes
• SSL	Yes	Yes	Yes	Yes	Yes
product functions time					
product function					
• SICLOCK support	Yes	Yes	Yes	Yes	Yes
• NTP-client	Yes	Yes	Yes	Yes	Yes
• SNTP client	Yes	Yes	Yes	Yes	Yes
protocol is supported					
• NTP	Yes	Yes	Yes	Yes	Yes
• SNTP	Yes	Yes	Yes	Yes	Yes
• IEEE 1588 profile default				Yes	Yes
standards, specifications, approvals					
certificate of suitability					
• CE marking	Yes	Yes	Yes	Yes	Yes

© Siemens AG 2024

Technical specifications (continued)

Article number	6GK5208-0BA00-2A-C2	6GK5216-0BA00-2A-C2	6GK5224-0BA00-2A-C2	6GK5208-0GA00-2A-C2	6GK5208-0GA00-2T-C2
• Regulatory Compliance Mark (RCM)	Yes	Yes	Yes	Yes	Yes
product conformity according to EMC-guideline	2014/30/EU	2014/30/EU	2014/30/EU	2014/30/EU	2014/30/EU
standard					
• for EMC interference emission	EN 61000-6-4, EN 50121-4	EN 61000-6-4, EN 50121-4	EN 61000-6-4, EN 50121-4	EN 61000-6-4, EN 50121-4	EN 61000-6-4, EN 50121-4
• for immunity to EMC	EN 61000-6-2, EN 50121-4	EN 61000-6-2, EN 50121-4	EN 61000-6-2, EN 50121-4	EN 61000-6-2, EN 50121-4	EN 61000-6-2, EN 50121-4
• for safety from CSA and UL	UL 60950-1 E115352	UL 60950-1 E115352	UL 60950-1 E115352	UL 60950-1 E115352, UL-61010-2 E85972	UL 60950-1 E115352, UL-61010-2 E85972
standards, specifications, approvals hazardous environments					
certificate of suitability					
• ATEX	Yes	Yes	Yes	Yes	Yes
• UKEX	Yes	Yes	Yes	Yes	Yes
• IECEx	Yes	Yes	Yes	Yes	Yes
• ULhazloc approval	Yes	Yes	Yes	Yes	Yes
• CCC for hazardous zone according to GB standard	Yes	Yes	Yes	Yes	Yes
• FM registration	Yes	Yes	Yes	Yes	Yes
standards, specifications, approvals other					
certificate of suitability					
• railway application in accordance with EN 50121-4	Yes	Yes	Yes	Yes	Yes
• RoHS conformity	Yes	Yes	Yes	Yes	Yes
IT security for industrial automation systems according to IEC 62443-4-2:2019	Yes	Yes	Yes	Yes	Yes
standards, specifications, approvals marine classification					
Marine classification association					
• American Bureau of Shipping Europe Ltd. (ABS)	Yes	Yes	Yes	Yes	Yes
• French marine classification society (BV)	Yes	Yes	Yes	Yes	Yes
• Chinese Classification Society (CCS)				Yes	Yes
• DNV GL	Yes	Yes	Yes	Yes	Yes
• Korean Register of Shipping (KRS)	Yes	Yes	Yes	Yes	Yes
• Lloyds Register of Shipping (LRS)	Yes	Yes	Yes	Yes	Yes
• Nippon Kaiji Kyokai (NK)	Yes	Yes	Yes	Yes	Yes
• Polski Rejestr Statkow (PRS)	Yes	Yes	Yes	Yes	Yes
• Royal Institution of Naval Architects (RINA)	Yes	Yes	Yes	Yes	Yes
standards, specifications, approvals Environmental Product Declaration					
Environmental Product Declaration	Yes	Yes	Yes	Yes	Yes
Global Warming Potential [CO2 eq]					
• total	153.7 kg	441.1 kg	441.1 kg	153.7 kg	153.7 kg
• during manufacturing	28.4 kg	47.67 kg	47.67 kg	28.4 kg	28.4 kg
• during operation	125.2 kg	392.82 kg	392.82 kg	125.2 kg	125.2 kg
• after end of life	0.02 kg	0.57 kg	0.57 kg	0.02 kg	0.02 kg

© Siemens AG 2024

Technical specifications (continued)

Article number	6GK5208-0BA00-2A-C2	6GK5216-0BA00-2A-C2	6GK5224-0BA00-2A-C2	6GK5208-0GA00-2A-C2	6GK5208-0GA00-2T-C2
product functions general					
MTBF	48 a	48 a	41 a	54 a	54 a
reference code					
• according to IEC 81346-2	KF	KF	KF	KF	KF
• according to IEC 81346-2:2019	KFE	KFE	KFE	KFE	KFE
Warranty period	5 a	5 a	5 a	5 a	5 a
product function is supported identification link	Yes; according to IEC 61406-1:2022	Yes; according to IEC 61406-1:2022	Yes; according to IEC 61406-1:2022	Yes; according to IEC 61406-1:2022	Yes; according to IEC 61406-1:2022
further information internet links					
internet link					
• to website: Selection guide for cables and connectors	https://support.industry.siemens.com/cs/ww/en/view/109766358	https://support.industry.siemens.com/cs/ww/en/view/109766358	https://support.industry.siemens.com/cs/ww/en/view/109766358	https://support.industry.siemens.com/cs/ww/en/view/109766358	https://support.industry.siemens.com/cs/ww/en/view/109766358
• to web page: selection aid TIA Selection Tool	https://www.siemens.com/tstcloud	https://www.siemens.com/tstcloud	https://www.siemens.com/tstcloud	https://www.siemens.com/tstcloud	https://www.siemens.com/tstcloud
• to website: Industrial communication	https://www.siemens.com/simatic-net	https://www.siemens.com/simatic-net	https://www.siemens.com/simatic-net	https://www.siemens.com/simatic-net	https://www.siemens.com/simatic-net
• to web page: SiePortal	https://sieportal.siemens.com/	https://sieportal.siemens.com/	https://sieportal.siemens.com/	https://sieportal.siemens.com/	https://sieportal.siemens.com/
• to website: Image database	https://www.automation.siemens.com/bilddb	https://www.automation.siemens.com/bilddb	https://www.automation.siemens.com/bilddb	https://www.automation.siemens.com/bilddb	https://www.automation.siemens.com/bilddb
• to website: CAx-Download-Manager	https://www.siemens.com/cax	https://www.siemens.com/cax	https://www.siemens.com/cax	https://www.siemens.com/cax	https://www.siemens.com/cax
• to website: Industry Online Support	https://support.industry.siemens.com	https://support.industry.siemens.com	https://support.industry.siemens.com	https://support.industry.siemens.com	https://support.industry.siemens.com

Article number	6GK5206-2RS00-2AC2	6GK5206-2RS00-5AC2	6GK5208-0RA00-2AC2	6GK5208-0RA00-5AC2
product type designation				
product brand name	SCALANCE	SCALANCE	SCALANCE	SCALANCE
product type designation	XC206-2G PoE		XC208G PoE	
transfer rate				
transfer rate	10 Mbit/s, 100 Mbit/s, 1 000 Mbit/s, 10 Gbit/s	10 Mbit/s, 100 Mbit/s, 1 000 Mbit/s, 10 Gbit/s	10 Mbit/s, 100 Mbit/s, 1 000 Mbit/s	10 Mbit/s, 100 Mbit/s, 1 000 Mbit/s
interfaces for communication integrated				
number of electrical connections				
• for network components or terminal equipment	6; RJ45	6; RJ45	8; RJ45	8; RJ45
number of 10/100/1000 Mbit/s RJ45 ports				
• with securing collar	4 PoE ports according to IEEE 802.3at (30 W), 2 PoE ports according to IEEE 802.3bt (60 W)	4 PoE ports according to IEEE 802.3at (30 W), 2 PoE ports according to IEEE 802.3bt (60 W)	2; 4 PoE ports according to IEEE 802.3at (30 W), 2 PoE ports according to IEEE 802.3bt (60 W)	2; 4 PoE ports according to IEEE 802.3at (30 W), 2 PoE ports according to IEEE 802.3bt (60 W)
• with securing collar with PoE	6	6	6	6
number of electrical connections				
• for SFP	2	2		
interfaces for communication plug-in				
number of electrical connections				
• for SFP+	2; SFPs with 1000 Mbps or 10,000 Mbps possible; 100 Mbps with SFP991-1(LD) A possible	2; SFPs with 1000 Mbps or 10,000 Mbps possible; 100 Mbps with SFP991-1(LD) A possible		
interfaces other				
number of electrical connections				
• for operator console	1	1	1	1

© Siemens AG 2024

Technical specifications (continued)

Article number	6GK5206-2RS00-2AC2	6GK5206-2RS00-5AC2	6GK5208-0RA00-2AC2	6GK5208-0RA00-5AC2
• for signaling contact	1	1	1	1
type of electrical connection				
• for operator console	RJ11	RJ11	RJ11	RJ11
• for signaling contact	2-pole terminal block	2-pole terminal block	2-pole terminal block	2-pole terminal block
• for power supply	4-pole terminal block	4-pole terminal block	4-pole terminal block	4-pole terminal block
design of the removable storage				
• C-PLUG	Yes	Yes	Yes	Yes
operating voltage of the signaling contacts				
• at DC rated value	24 V	54 V	24 V	54 V
operational current of the signaling contacts				
• at DC maximum	0.1 A	0.1 A	0.1 A	0.1 A
supply voltage, current consumption, power loss				
product component connection for redundant voltage supply	Yes	Yes	Yes	Yes
supplied active power of PSE with PoE				
• total maximum	144 W	260 W	144 W	260 W
type of voltage 1 of the supply voltage	DC	DC	DC	DC
• supply voltage 1 rated value	24 V	54 V	24 V	54 V
• power loss [W] 1 rated value	18 W	10 W		
• consumed current 1 at rated supply voltage maximum			6 A	5 A
• supply voltage 1 rated value	19.2 ... 31.2 V	52 ... 57 V	19.2 ... 31.2 V	52 ... 57 V
• consumed current 1 maximum	6 A	5 A	7.5 A	5 A
• product component 1 fusing at power supply input	Yes	Yes		
• fuse protection type 1 at input for supply voltage	15 A / 125 V	15 A / 125 V	15 A / 125 V	15 A / 125 V
ambient conditions				
ambient temperature				
• during operation	-40 ... +60 °C	-40 ... +60 °C	-40 ... +60 °C	-40 ... +60 °C
• during storage	-40 ... +85 °C	-40 ... +85 °C	-40 ... +85 °C	-40 ... +85 °C
• during transport	-40 ... +85 °C	-40 ... +85 °C	-40 ... +85 °C	-40 ... +85 °C
• note	installation position and SFPs used during the operation have to be considered (see manual)	installation position and SFPs used during the operation have to be considered (see manual)	installation position and SFPs used during the operation have to be considered (see manual)	installation position and SFPs used during the operation have to be considered (see manual)
relative humidity				
• at 25 °C without condensation during operation maximum	95 %	95 %	95 %	95 %
protection class IP	IP20	IP20	IP20	IP20
design, dimensions and weights				
design	compact	compact	compact	compact
width	100 mm	60 mm	100 mm	60 mm
height	147 mm	147 mm	147 mm	147 mm
depth	125 mm	125 mm	125 mm	125 mm
net weight	0.955 kg	0.54 kg	0.955 kg	0.54 kg
product feature conformal coating	No	No	No	No
material of the enclosure	Polycarbonate (PC-GF10) / pressure die cast aluminum	Polycarbonate (PC-GF10) / pressure die cast aluminum	Polycarbonate (PC-GF10) / pressure die cast aluminum	Polycarbonate (PC-GF10) / pressure die cast aluminum
fastening method				
• 35 mm top hat DIN rail mounting	Yes	Yes	Yes	Yes
• wall mounting	Yes	Yes	Yes	Yes
• S7-300 rail mounting	Yes	Yes	Yes	Yes

© Siemens AG 2024

Technical specifications (continued)

Article number	6GK5206-2RS00-2AC2	6GK5206-2RS00-5AC2	6GK5208-0RA00-2AC2	6GK5208-0RA00-5AC2
• S7-1500 rail mounting	Yes	Yes	Yes	Yes
product features, product functions, product components general				
cascading in the case of a redundant ring at reconfiguration time of <\~0.3\~s	50	50	50	50
cascading in cases of star topology	any (depending only on signal propagation time)	any (depending only on signal propagation time)	any (depending only on signal propagation time)	any (depending only on signal propagation time)
product function				
• QoS according to DSCP	Yes	Yes	Yes	Yes
product feature				
• Cut Through switching method	No	No	No	No
• Store & Forward switching method	Yes	Yes	Yes	Yes
product functions management, configuration, engineering				
product function				
• CLI	Yes	Yes	Yes	Yes
• web-based management	Yes	Yes	Yes	Yes
• MIB support	Yes	Yes	Yes	Yes
• TRAPs via email	Yes	Yes	Yes	Yes
• configuration with STEP 7	Yes	Yes	Yes	Yes
• RMON	Yes	Yes	Yes	Yes
• SMTP server	No	No	No	No
• port mirroring	Yes	Yes	Yes	Yes
• multiport mirroring	Yes	Yes	Yes	Yes
• CoS	Yes	Yes	Yes	Yes
• PROFINET IO diagnosis	Yes	Yes	Yes	Yes
• switch-managed	Yes	Yes	Yes	Yes
PROFINET conformity class	B	B	B	B
network load class according to PROFINET	3	3	3	3
telegram length for Ethernet maximum	10 240 byte	10 240 byte	10 240 byte	10 240 byte
protocol is supported				
• Telnet	Yes	Yes	Yes	Yes
• HTTP	Yes	Yes	Yes	Yes
• HTTPS	Yes	Yes	Yes	Yes
• TFTP	Yes	Yes	Yes	Yes
• BOOTP	No	No	No	No
• GMRP	Yes	Yes	Yes	Yes
• DCP	Yes	Yes	Yes	Yes
• LLDP	Yes	Yes	Yes	Yes
• EtherNet/IP	Yes	Yes	Yes	Yes
• SNMP v1	Yes	Yes	Yes	Yes
• SNMP v2	Yes	Yes	Yes	Yes
• SNMP v3	Yes	Yes	Yes	Yes
• IGMP (snooping/querier)	Yes	Yes	Yes	Yes
identification & maintenance function				
• I&M0 - device-specific information	Yes	Yes	Yes	Yes
• I&M1 - higher level designation/location designation	Yes	Yes	Yes	Yes
product functions diagnostics				
product function				
• port diagnostics	Yes	Yes	Yes	Yes

© Siemens AG 2024

Technical specifications (continued)

Article number	6GK5206-2RS00-2AC2	6GK5206-2RS00-5AC2	6GK5208-0RA00-2AC2	6GK5208-0RA00-5AC2
• statistics Packet Size	Yes	Yes	Yes	Yes
• statistics packet type	Yes	Yes	Yes	Yes
• error statistics	Yes	Yes	Yes	Yes
• SysLog	Yes	Yes	Yes	Yes
product functions VLAN				
product function				
• VLAN - port based	Yes	Yes	Yes	Yes
• VLAN - protocol-based	No	No	No	No
• VLAN - IP-based	No	No	No	No
number of VLANs maximum	257	257	257	257
number of VLANs - dynamic maximum	257	257	257	257
number of VLANs at ring redundancy (HRP; MRP; standby link)	257	257	257	257
product functions DHCP				
product function				
• DHCP server	Yes	Yes	Yes	Yes
• DHCP client	Yes	Yes	Yes	Yes
• DHCP Option 82	Yes	Yes	Yes	Yes
• DHCP Option 66	Yes	Yes	Yes	Yes
• DHCP Option 67	Yes	Yes	Yes	Yes
product functions redundancy				
protocol is supported Media Redundancy Protocol (MRP)	Yes	Yes	Yes	Yes
product function				
• media redundancy protocol (MRP) with redundancy manager	Yes	Yes	Yes	Yes
• Media Redundancy Protocol Interconnection (MRP-I)	Yes	Yes	Yes	Yes
• of the PROFINET IO device is supported H-Sync forwarding	Yes	Yes	Yes	Yes
• of the PROFINET IO device is supported PROFINET system redundancy	Yes	Yes	Yes	Yes
• ring redundancy	Yes	Yes	Yes	Yes
• high speed redundancy protocol (HRP) with redundancy manager	Yes	Yes	Yes	Yes
• high speed redundancy protocol (HRP) with standby redundancy	Yes	Yes	Yes	Yes
• redundancy procedure STP	Yes	Yes	Yes	Yes
• redundancy procedure RSTP	Yes	Yes	Yes	Yes
• redundancy procedure RSTP+	Yes	Yes	Yes	Yes
• redundancy procedure MSTP	Yes	Yes	Yes	Yes
• Parallel Redundancy Protocol (PRP)/operation in the PRP-network	Yes	Yes	Yes	Yes
• Parallel Redundancy Protocol (PRP)/Redundant Network Access (RNA)	No	No	No	No
• passive listening	Yes	Yes	Yes	Yes
protocol is supported				
• LACP	Yes	Yes	Yes	Yes
system modification during operation				
product function configuration in RUN via CiR/H-CiR	Yes	Yes	Yes	Yes
product functions security				
product function				
• IEEE 802.1x (radius)	Yes	Yes	Yes	Yes

© Siemens AG 2024

Technical specifications (continued)

Article number	6GK5206-2RS00-2AC2	6GK5206-2RS00-5AC2	6GK5208-0RA00-2AC2	6GK5208-0RA00-5AC2
• broadcast/multicast/unicast limiter	Yes	Yes	Yes	Yes
• broadcast blocking	Yes	Yes	Yes	Yes
protocol is supported				
• SSH	Yes	Yes	Yes	Yes
• SSL	Yes	Yes	Yes	Yes
product functions time				
product function				
• SICLOCK support	Yes	Yes	Yes	Yes
• NTP-client	Yes	Yes	Yes	Yes
• SNTP client	Yes	Yes	Yes	Yes
protocol is supported				
• NTP	Yes	Yes	Yes	Yes
• SNTP	Yes	Yes	Yes	Yes
• IEEE 1588 profile default	Yes	Yes	Yes	Yes
standards, specifications, approvals				
certificate of suitability				
• CE marking	Yes	Yes	Yes	Yes
• KC approval	Yes	Yes	Yes	Yes
• Regulatory Compliance Mark (RCM)	Yes	Yes	Yes	Yes
product conformity according to EMC-guideline	2014/30/EU	2014/30/EU	2014/30/EU	2014/30/EU
standard				
• for EMC interference emission	EN 61000-6-4, EN 50121-4	EN 61000-6-4, EN 50121-4	EN 61000-6-4, EN 50121-15	EN 61000-6-4, EN 50121-15
• for immunity to EMC	EN 61000-6-2, EN 50121-4	EN 61000-6-2, EN 50121-4	EN 61000-6-2, EN 50121-4	EN 61000-6-2, EN 50121-4
standards, specifications, approvals hazardous environments				
certificate of suitability				
• ATEX	Yes	Yes	Yes	Yes
• UKEX	Yes	Yes	Yes	Yes
• IECEx	Yes	Yes	Yes	Yes
• CCC for hazardous zone according to GB standard	Yes	Yes	Yes	Yes
• FM registration	Yes	Yes	Yes	Yes
standards, specifications, approvals other				
certificate of suitability				
• railway application in accordance with EN 50121-4	Yes	Yes	Yes	Yes
IT security for industrial automation systems according to IEC 62443-4-2:2019	Yes	Yes	Yes	Yes
standards, specifications, approvals marine classification				
Marine classification association				
• American Bureau of Shipping Europe Ltd. (ABS)	Yes		Yes	
• French marine classification society (BV)	Yes		Yes	
• Chinese Classification Society (CCS)	Yes		Yes	
• DNV GL	Yes		Yes	
• Korean Register of Shipping (KRS)	Yes		Yes	
• Lloyds Register of Shipping (LRS)	Yes		Yes	
• Nippon Kaiji Kyokai (NK)		Yes	Yes	

© Siemens AG 2024

Technical specifications (continued)

Article number	6GK5206-2RS00-2AC2	6GK5206-2RS00-5AC2	6GK5208-0RA00-2AC2	6GK5208-0RA00-5AC2
• Polski Rejestr Statkow (PRS)	Yes		Yes	
• Royal Institution of Naval Architects (RINA)	Yes		Yes	
standards, specifications, approvals Environmental Product Declaration				
Environmental Product Declaration	Yes	Yes	Yes	Yes
Global Warming Potential [CO2 eq]				
• total	942.3 kg	491.2 kg	942.3 kg	491.2 kg
• during manufacturing	63.42 kg	52.28 kg	63.42 kg	52.28 kg
• during operation	878.11 kg	438.3 kg	878.11 kg	438.3 kg
• after end of life	0.76 kg	0.62 kg	0.76 kg	0.62 kg
product functions general				
MTBF	42 a	37 a	42 a	37 a
reference code				
• according to IEC 81346-2	KF	KF	KF	KF
• according to IEC 81346-2:2019	KFE	KFE	KFE	KFE
Warranty period	5 a	5 a	5 a	5 a
product function is supported identification link	Yes; according to IEC 61406-1:2022		Yes; according to IEC 61406-1:2022	
further information internet links				
internet link				
• to website: Selection guide for cables and connectors	https://support.industry.siemens.com/cs/ww/en/view/109766-358	https://support.industry.siemens.com/cs/ww/en/view/109766-358	https://support.industry.siemens.com/cs/ww/en/view/109766-358	https://support.industry.siemens.com/cs/ww/en/view/109766-358
• to web page: selection aid TIA Selection Tool	https://www.siemens.com/tstcloud	https://www.siemens.com/tstcloud	https://www.siemens.com/tstcloud	https://www.siemens.com/tstcloud
• to website: Industrial communication	https://www.siemens.com/simatic-net	https://www.siemens.com/simatic-net	https://www.siemens.com/simatic-net	https://www.siemens.com/simatic-net
• to web page: SiePortal	https://sieportal.siemens.com/	https://sieportal.siemens.com/	https://sieportal.siemens.com/	https://sieportal.siemens.com/
• to website: Image database	https://www.automation.siemens.com/bilddb	https://www.automation.siemens.com/bilddb	https://www.automation.siemens.com/bilddb	https://www.automation.siemens.com/bilddb
• to website: CAx-Download-Manager	https://www.siemens.com/cax	https://www.siemens.com/cax	https://www.siemens.com/cax	https://www.siemens.com/cax
• to website: Industry Online Support	https://support.industry.siemens.com	https://support.industry.siemens.com	https://support.industry.siemens.com	https://support.industry.siemens.com

Article number	6GK5216-3RS00-2AC2	6GK5216-3RS00-5AC2
product type designation		
product brand name	SCALANCE	SCALANCE
transfer rate		
transfer rate	10 Mbit/s, 100 Mbit/s, 1 000 Mbit/s, 10 Gbit/s	10 Mbit/s, 100 Mbit/s, 1 000 Mbit/s, 10 Gbit/s
interfaces for communication integrated		
number of electrical connections		
• for network components or terminal equipment	16; RJ45	16; RJ45
number of 10/100/1000 Mbit/s RJ45 ports		
• with securing collar	16; 12 PoE ports according to IEEE 802.3at (30 W), 2 PoE ports according to IEEE 802.3bt (60 W)	16; 12 PoE ports according to IEEE 802.3at (30 W), 2 PoE ports according to IEEE 802.3bt (60 W)
• with securing collar with PoE	14	14
number of electrical connections		
• for SFP	3	3
interfaces for communication plug-in		
number of electrical connections		
• for SFP	1	1

© Siemens AG 2024

Technical specifications (continued)

Article number	6GK5216-3RS00-2AC2	6GK5216-3RS00-5AC2
• for SFP+	2; SFPs with 1000 Mbit/s or 10,000 Mbit/s possible; 100 Mbit/s with SFP991-1(LD) A possible	2; SFPs with 1000 Mbit/s or 10,000 Mbit/s possible; 100 Mbit/s with SFP991-1(LD) A possible
interfaces other		
number of electrical connections		
• for operator console	1	1
• for signaling contact	1	1
type of electrical connection		
• for operator console	RJ11	RJ11
• for signaling contact	2-pole terminal block	2-pole terminal block
• for power supply	4-pole terminal block	4-pole terminal block
design of the removable storage		
• C-PLUG	Yes	Yes
operating voltage of the signaling contacts		
• at DC rated value	24 V	54 V
operational current of the signaling contacts		
• at DC maximum	0.1 A	0.1 A
supply voltage, current consumption, power loss		
product component connection for redundant voltage supply	Yes	Yes
supplied active power of PSE with PoE		
• total maximum	150 W	338 W
type of voltage 1 of the supply voltage	DC	DC
• supply voltage 1 rated value	24 V	54 V
• power loss [W] 1 rated value	28 W	28 W
• supply voltage 1 rated value	19.2 ... 31.2 V	52 ... 57 V
• consumed current 1 maximum	7.8 A	6.5 A
• product component 1 fusing at power supply input	Yes	Yes
• fuse protection type 1 at input for supply voltage	15 A / 125 V	15 A / 125 V
ambient conditions		
ambient temperature		
• during operation	-40 ... +60 °C	-40 ... +60 °C
• during storage	-40 ... +85 °C	-40 ... +85 °C
• during transport	-40 ... +85 °C	-40 ... +85 °C
• note	installation position and SFPs used during the operation have to be considered (see manual)	installation position and SFPs used during the operation have to be considered (see manual)
relative humidity		
• at 25 °C without condensation during operation maximum	95 %	95 %
protection class IP	IP20	IP20
design, dimensions and weights		
design	compact	compact
width	180 mm	140 mm
height	147 mm	147 mm
depth	125 mm	125 mm
net weight	1.56 kg	1.14 kg
product feature conformal coating	No	No
material of the enclosure	Polycarbonate (PC-GF10) / pressure die cast aluminum	Polycarbonate (PC-GF10) / pressure die cast aluminum
fastening method		
• 35 mm top hat DIN rail mounting	Yes	Yes
• wall mounting	No	No
• S7-300 rail mounting	Yes	Yes
• S7-1500 rail mounting	Yes	Yes

© Siemens AG 2024

Technical specifications (continued)

Article number	6GK5216-3RS00-2AC2	6GK5216-3RS00-5AC2
product features, product functions, product components general		
cascading in the case of a redundant ring at reconfiguration time of <\~0.3\~s	50	50
cascading in cases of star topology	any (depending only on signal propagation time)	any (depending only on signal propagation time)
product function		
• QoS according to DSCP	Yes	Yes
product feature		
• Cut Through switching method	No	No
• Store & Forward switching method	Yes	Yes
product functions management, configuration, engineering		
product function		
• CLI	Yes	Yes
• web-based management	Yes	Yes
• MIB support	Yes	Yes
• TRAPs via email	Yes	Yes
• configuration with STEP 7	Yes	Yes
• RMON	Yes	Yes
• SMTP server	No	No
• port mirroring	Yes	Yes
• multiport mirroring	Yes	Yes
• CoS	Yes	Yes
• PROFINET IO diagnosis	Yes	Yes
• switch-managed	Yes	Yes
PROFINET conformity class	B	B
network load class according to PROFINET	3	3
telegram length for Ethernet maximum	10 240 byte	10 240 byte
protocol is supported		
• Telnet	Yes	Yes
• HTTP	Yes	Yes
• HTTPS	Yes	Yes
• TFTP	Yes	Yes
• BOOTP	No	No
• GMRP	Yes	Yes
• DCP	Yes	Yes
• LLDP	Yes	Yes
• EtherNet/IP	Yes	Yes
• SNMP v1	Yes	Yes
• SNMP v2	Yes	Yes
• SNMP v3	Yes	Yes
• IGMP (snooping/querier)	Yes	Yes
identification & maintenance function		
• I&M0 - device-specific information	Yes	Yes
• I&M1 - higher level designation/location designation	Yes	Yes
product functions diagnostics		
product function		
• port diagnostics	Yes	Yes
• statistics Packet Size	Yes	Yes
• statistics packet type	Yes	Yes
• error statistics	Yes	Yes

© Siemens AG 2024

Technical specifications (continued)

Article number	6GK5216-3RS00-2AC2	6GK5216-3RS00-5AC2
• SysLog	Yes	Yes
product functions VLAN		
product function		
• VLAN - port based	Yes	Yes
• VLAN - protocol-based	No	No
• VLAN - IP-based	No	No
number of VLANs maximum	257	257
number of VLANs - dynamic maximum	257	257
number of VLANs at ring redundancy (HRP; MRP; standby link)	257	257
product functions DHCP		
product function		
• DHCP server	Yes	Yes
• DHCP client	Yes	Yes
• DHCP Option 82	Yes	Yes
• DHCP Option 66	Yes	Yes
• DHCP Option 67	Yes	Yes
product functions redundancy		
protocol is supported Media Redundancy Protocol (MRP)	Yes	Yes
product function		
• media redundancy protocol (MRP) with redundancy manager	Yes	Yes
• Media Redundancy Protocol Interconnection (MRP-I)	Yes	Yes
• of the PROFINET IO device is supported H-Sync forwarding	Yes	Yes
• of the PROFINET IO device is supported PROFINET system redundancy	Yes	Yes
• ring redundancy	Yes	Yes
• high speed redundancy protocol (HRP) with redundancy manager	Yes	Yes
• high speed redundancy protocol (HRP) with standby redundancy	Yes	Yes
• redundancy procedure STP	Yes	Yes
• redundancy procedure RSTP	Yes	Yes
• redundancy procedure RSTP+	Yes	Yes
• redundancy procedure MSTP	Yes	Yes
• Parallel Redundancy Protocol (PRP)/operation in the PRP-network	Yes	Yes
• Parallel Redundancy Protocol (PRP)/Redundant Network Access (RNA)	No	No
• passive listening	Yes	Yes
protocol is supported		
• LACP	Yes	Yes
system modification during operation		
product function configuration in RUN via CiR/H-CiR	Yes	Yes
product functions security		
product function		
• IEEE 802.1x (radius)	Yes	Yes
• broadcast/multicast/unicast limiter	Yes	Yes
• broadcast blocking	Yes	Yes
protocol is supported		
• SSH	Yes	Yes
• SSL	Yes	Yes
product functions time		
product function		
• SICLOCK support	Yes	Yes

© Siemens AG 2024

Technical specifications (continued)

Article number	6GK5216-3RS00-2AC2	6GK5216-3RS00-5AC2
• NTP-client	Yes	Yes
• SNTP client	Yes	Yes
protocol is supported		
• NTP	Yes	Yes
• SNTP	Yes	Yes
• IEEE 1588 profile default	Yes	Yes
standards, specifications, approvals		
certificate of suitability		
• CE marking	Yes	Yes
• KC approval	Yes	Yes
• Regulatory Compliance Mark (RCM)	Yes	Yes
product conformity according to EMC-guideline	2014/30/EU	2014/30/EU
standard		
• for EMC interference emission	EN 61000-6-4, EN 50121-15	EN 61000-6-4, EN 50121-15
• for immunity to EMC	EN 61000-6-2, EN 50121-4	EN 61000-6-2, EN 50121-4
standards, specifications, approvals hazardous environments		
certificate of suitability		
• ATEX	Yes	Yes
• UKEX	Yes	Yes
• IECEx	Yes	Yes
• CCC for hazardous zone according to GB standard	Yes	Yes
• FM registration	Yes	Yes
standards, specifications, approvals other		
certificate of suitability		
• railway application in accordance with EN 50121-4	Yes	Yes
IT security for industrial automation systems according to IEC 62443-4-2:2019	Yes	Yes
standards, specifications, approvals marine classification		
Marine classification association		
• American Bureau of Shipping Europe Ltd. (ABS)	Yes	
• French marine classification society (BV)	Yes	
• Chinese Classification Society (CCS)	Yes	
• DNV GL	Yes	
• Korean Register of Shipping (KRS)	Yes	
• Lloyds Register of Shipping (LRS)	Yes	
• Nippon Kaiji Kyokai (NK)	Yes	
• Polski Rejestr Statkow (PRS)	Yes	
• Royal Institution of Naval Architects (RINA)	Yes	
standards, specifications, approvals Environmental Product Declaration		
Environmental Product Declaration	Yes	Yes
Global Warming Potential [CO2 eq]		
• total	942.3 kg	491.2 kg
• during manufacturing	63.42 kg	52.28 kg
• during operation	878.11 kg	438.3 kg
• after end of life	0.76 kg	0.62 kg
product functions general		
MTBF	24.6 a	23 a
reference code		

© Siemens AG 2024

Technical specifications (continued)

Article number	6GK5216-3RS00-2AC2	6GK5216-3RS00-5AC2
• according to IEC 81346-2	KF	KF
• according to IEC 81346-2:2019	KFE	KFE
Warranty period	5 a	5 a
further information internet links		
internet link		
• to website: Selection guide for cables and connectors	https://sup-port.industry.siemens.com/cs/ww/en/view/109766358	https://sup-port.industry.siemens.com/cs/ww/en/view/109766358
• to web page: selection aid TIA Selection Tool	https://www.siemens.com/tstcloud	https://www.siemens.com/tstcloud
• to website: Industrial communication	https://www.siemens.com/simatic-net	https://www.siemens.com/simatic-net
• to web page: SiePortal	https://sieportal.siemens.com/	https://sieportal.siemens.com/
• to website: Image database	https://www.automation.siemens.com/bilddb	https://www.automation.siemens.com/bilddb
• to website: CAx-Download-Manager	https://www.siemens.com/cax	https://www.siemens.com/cax
• to website: Industry Online Support	https://support.industry.siemens.com	https://support.industry.siemens.com

More information

Selection Tool:

To support the selection of SCALANCE network components, the TIA Selection Tool is available at:

www.siemens.com/tst

Ordering overview:

You can find more information on the FastConnect range in the "Cabling technology for communication networks in industry" ordering overview.

© Siemens AG 2024

Overview

The managed Industrial Ethernet switches of the SCALANCE XC-200EEC product line are optimized for setting up Industrial Ethernet networks in process automation with data transfer rates of 10/100/1000 Mbps in line, star or ring topologies. Rugged enclosure in SIMATIC S7-1500 format, for mounting on standard DIN mounting rails and SIMATIC S7-300 and SIMATIC S7-1500 mounting rails, or for direct wall mounting.

- The XC-200EEC versions are optimized for use in process automation and feature the following properties:
  - Conformal coating PCBs
  - Max. installation altitude 4 000 m
  - Extended temperature range from -40 °C to +70 °C
  - NAMUR NE 21-compliant
  - Firmware support for S2 device and CiR/H-CiR
  - Release and integration capability for SIMATIC PCS 7
- Electrical or optical connection to stations or networks according to port characteristics of the devices
- Versions with transmission rates up to 1 000 Mbps, electrical or optical

Product versions

- Switches with electrical ports:
  - SCALANCE XC208 (EEC)
    With 8x RJ45 ports 10/100 Mbps for mounting in the control cabinet
  - SCALANCE XC208G (EEC)
    With 8x RJ45 ports 10/100/1000 Mbps for mounting in the control cabinet
  - SCALANCE XC216 (EEC)
    With 16x RJ45 ports 10/100 Mbps for mounting in the control cabinet
- Switches with electrical and optical ports
  - SCALANCE XC206-2SFP (EEC)
    With 6x RJ45 ports 10/100 Mbps and 2x SFP plug-in transceivers with 100 or 1 000 Mbps
  - SCALANCE XC206-2SFP G (EEC)
    With 6x RJ45 ports 10/100/1 000 Mbps and 2x SFP plug-in transceivers 1 000 Mbps

Overview (continued)

  - SCALANCE XC216-4C G (EEC)
    With 12x RJ45 ports 10/100/1 000 Mbps and 4x Gigabit combo ports (either 10/100/1 000 Mbps RJ45 port or SFP plug-in transceiver 1 000 Mbps can be used)
  - SCALANCE XC224-4C G (EEC)
    With 20x RJ45 ports 10/100/1 000 Mbps and 4x Gigabit combo ports (either 10/100/1 000 Mbps RJ45 port or SFP plug-in transceiver 1 000 Mbps can be used)

Benefits

get Designed for Industry

- Operational reliability in industrial environments, e.g. due to rugged enclosure, redundancy, temperature range from -40 °C to +70 °C
- Increased plant availability thanks to:
  - Redundant power supply
  - Redundant network structures based on fast media redundancy HRP and MRP
  - Standby redundancy between HRP rings
  - Prevention of loops by standard STP, RSTP and MSTP mechanisms, and loop detection
  - SFP plug-in transceivers can be replaced or expanded during operation
  - Easy device replacement by means of plug-in C-PLUG removable data storage medium
  - Link aggregation (IEEE 802.3ad) for parallel use of ports to increase transmission rate failure safety
- Integration of switches in systems with S2 single system redundancy and Configuration in Run (CiR/H-CiR)
- Since Configuration in Run (CiR/H-CiR) is supported, PROFINET-defined configuration changes to the switch are performed during operation
- Configuration as a service bridge permits dedicated temporary access from the plant bus to the fieldbus for advanced commissioning and diagnostic purposes
- Easy monitoring and diagnostics due to separate diagnostics station with integrated LEDs, signaling contact, web browser, traps and e-mail transmission
- Easy integration in the process and system diagnostics with PROFINET via SIMATIC PCS 7
- Integration of Industrial Ethernet switches into existing network management systems (e.g. SINEMA Server or SINEC NMS) by means of SNMP access
- Reliable plug-in connection thanks to rugged, industry-standard device connection in conjunction with industry-standard FastConnect connectors

© Siemens AG 2024

Application

SCALANCE XC-200EEC Industrial Ethernet switches enable cost-effective configuration of Industrial Ethernet line, star or ring topologies with switching functionality for networks in which high availability or remote diagnostic capabilities are required. The devices with degree of protection IP20 are designed for operation in the control cabinet.

Features:

- Integrated industrial network for data, voice, video, and Industrial Ethernet
- Integrated system diagnostics with PROFINET, SINEC NMS, Syslog, and SNMP
- Integrated security functions offer protection against unauthorized network access and configuration, see technical specifications
- Coated printed circuit boards (conformal coating)
- Installation altitudes up to 4 000 m possible
- Extended temperature range from -40 °C to +70 °C
- NAMUR NE 21-compliant
- Firmware support of: S2 device and CiR/H-CiR
- The devices are released for SIMATIC PCS 7 and SIMATIC PCS neo and are integration capable
- With SCALANCE XC206-2G PoE EEC, simple data and power supply via the Ethernet cable to the connected end devices is also possible. In addition, high-performance networks can be implemented over long distances with 2x 10 Gbps SFP ports

Design

SCALANCE XC-200EEC Industrial Ethernet switches with a rugged enclosure are optimized for mounting on DIN rails and SIMATIC S7-1500 DIN rails. Direct wall mounting in various positions and mounting on a SIMATIC S7-300 DIN rail are also possible. Thanks to the SIMATIC S7-1500 enclosure dimensions, the devices are ideally suited for integration into an automation solution with SIMATIC S7-1500 components.

The switches with IP20 degree of protection feature:

- A 4-pin terminal block (push-in) for connecting the redundant supply voltage (2 x 24 V DC)
- LEDs for signaling on-site status information:
  - Port status
  - Port mode (10/100/1000 Mbps, full/half-duplex)
  - Status of the two power supplies
  - Signaling contact status
  - Signal mask (setpoint status)
  - Redundancy manager mode (RM mode)
  - Standby mode
- A 2-pin terminal block (push-in) for connecting the floating signaling contact
- A SELECT/SET button for on-site configuration of the signaling contact

SCALANCE XC-200EEC switches are available with the following port types:

- 10/100/1000BASETX, RJ45 connection;

  Automatic detection of data transmission rate (10 or 100 Mbps), with autosensing and autocrossover function for connecting IE FC cables via IE FC RJ45 plugs over distances up to 100 m.
- SFP slots for 100BASE-X, 1000BASE-X, 10GBASE-X

  LC connections with different ranges can be implemented via SFP modules (multimode/single-mode up to 200 km)
- With SCALANCE XC206-2G PoE EEC, the SFP interfaces of the combo ports support both 1000 Mbps SFPs and 10000 Mbps SFP+

© Siemens AG 2024

Function

- Setup of electrical and optical Industrial Ethernet line, star and ring topologies
  - Use in ring topologies together with SCALANCE X-200, SCALANCE X-300, SCALANCE XM-400 and XR-500
- Fast redundancy in the ring with:
  - High Speed Redundancy Protocol (HRP), max. 0.3 second reconfiguration time with 50 switches in the ring
  - PROFINET MRP (Media Redundancy Protocol), max. 0.2 second reconfiguration time of the ring with 50 switches in the ring
  - Redundant coupling of MRP rings through MRP interconnection function
  - Redundant connection of MRP rings in RSTP networks through RSTP+ function
- The functioning of the ring is continuously monitored by the integrated redundancy manager. It recognizes transmission link failures in the ring or failure of a SCALANCE XC-200EEC and activates the substitute link within 0.3 seconds or 0.2 seconds with MRP
- Uncrossed connecting cables can be used due to autocrossover function integrated in the ports
- Easy diagnostics using signaling contact, SNMP and web browser
- Easy copper cable diagnostics via web browser for localizing cable breaks
- Fiber monitoring: Easy fiber-optic cable port diagnostics by means of web browser and SNMP for early detection of changes on the fiber-optic cable line or at the fiber-optic cable ports
- Integration into the diagnostics of a PROFINET controller with expanded diagnostics functions for a consistent diagnostics concept, including network infrastructure
- Diagnostics of data traffic by means of a parameterizable mirror port with a standard commercial network analyzer
- Optimized support of PROFINET real-time communication (RT) through prioritizing
- Fast device replacement in the event of a fault by using the optional C-PLUG removable data storage medium (not included in scope of supply)
- Redundant interfacing to company networks

  The XC-200EEC switches support the standardized redundancy procedures Spanning Tree Protocol (STP) and Rapid Spanning Tree Protocol (RSTP). This enables a subnetwork to be connected redundantly to a higher level corporate network with reduced requirements for the reconfiguration time (in the order of seconds)
- Support of virtual LANs (VLANs)

  For structuring Industrial Ethernet networks with a fast growing number of nodes, a physically existing network can be divided into several logical networks
- Load limiting with use of multicast protocols (e.g. querier, video)

  By learning the multicast sources and targets (IGMP snooping), XC-200EEC switches can also filter multicast data traffic, thus limiting the load in the network. Multicast and broadcast traffic can be limited.
- Firmware support as S2 device and CiR/H-CiR
- SCALANCE XC-200EEC can be diagnosed in SIMATIC PCS 7 and SIMATIC PCS neo and faults in the switches are detected by both PLCs in a redundant H system. The CiR/H-CiR functionality enables changes during operation, even when configuring the SCALANCE XC-200.
- Easy connection of PoE terminal devices such as IP cameras or access points via PoE function and realization of high-performance networks over long distances (SCALANCE XC206-2G PoE EEC only)

Network topology and network configuration

The SCALANCE XC-200EEC Industrial Ethernet switches with IP20 degree of protection are usually installed in a control cabinet together with the stations to be connected. Electrical and optical versions can be installed together in star, line and ring topologies.

The following network structures and combinations of structures can be implemented:

- Fast Ethernet and Gigabit rings with fast media redundancy
- Improved reconfiguration times for redundant connection of MRP rings in RSTP networks through RSTP+ function
- Star topology with XC-200EEC switches

  Each SCALANCE XC-200EEC switch represents a neutral point which can interconnect as many as 8/16/24 nodes or subnetworks.

When configuring the network, the following boundary conditions must be observed:

- Maximum cable length for twisted pair:
  - Max. 100 m with Industrial Ethernet FC cable and Industrial Ethernet FC plugs
  - Max. 10 m using patches with TP cord
- Length of the optical cables:
  - Maximum cable length between two modules for multimode fiber-optic cables:
    – 5000 m at 100 Mbps
    – 750 m at 1 Gbps
  - Maximum line length between two modules for single-mode FOCs:
    - 200 km at 100 Mbps
    - 120 km at 1 Gbps
- IP address:

  The IP address can be assigned by means of the DHCP (Dynamic Host Configuration Protocol). If there is no corresponding server in the network, the IP address can be assigned using the supplied software tool SINEC PNI (Primary Network Initialization) or STEP 7 / TIA Portal. Assignment via the local console port is also possible
- Service bridge:

  For extended commissioning and diagnostics purposes, the SCALANCE XC-200EEC can be configured as a service bridge. The special configuration permits dedicated temporary access from the plant bus to the fieldbus, while simultaneously ensuring the logical separation between the fieldbuses.

© Siemens AG 2024

Function (continued)

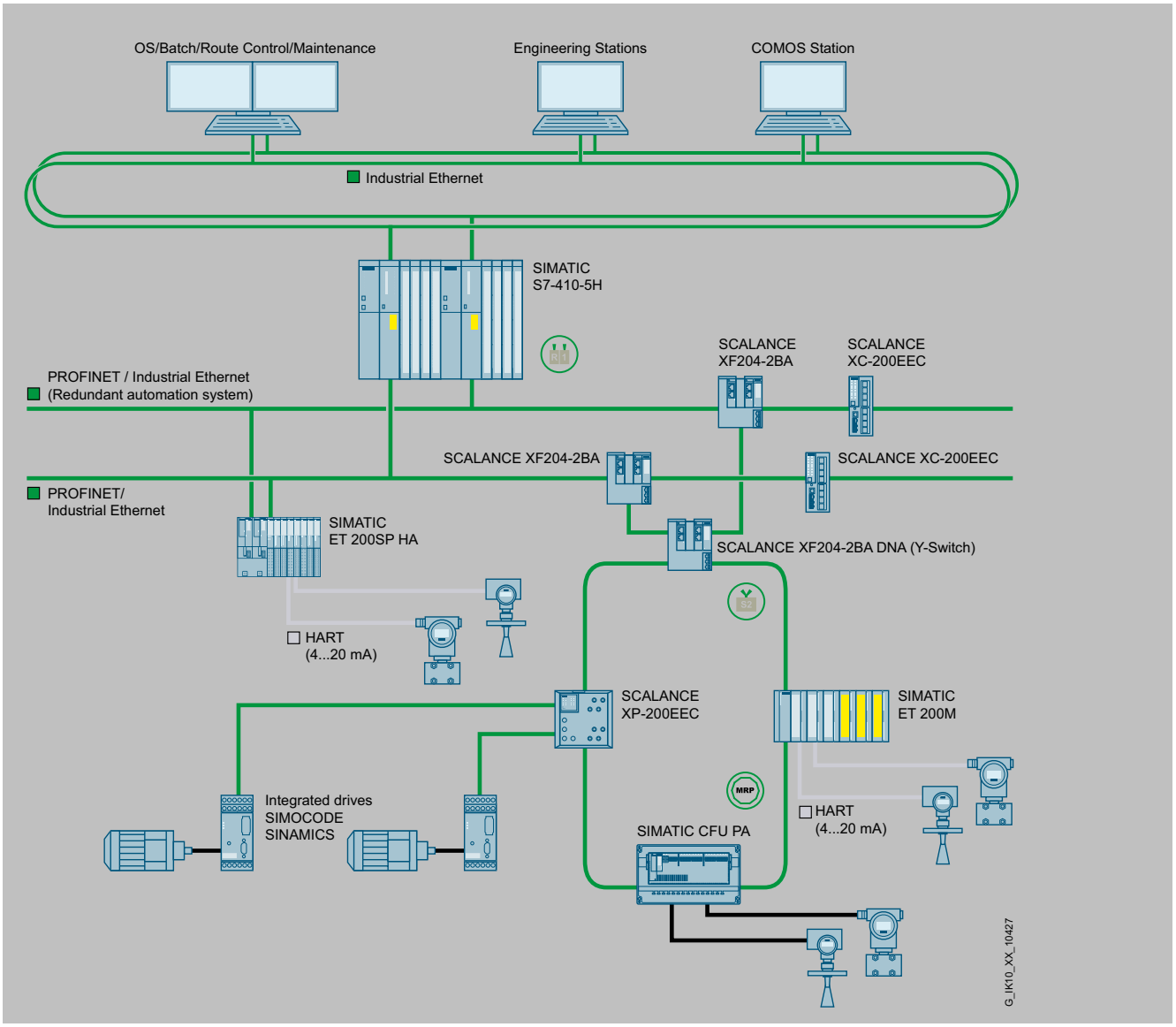

Connection of Industrial Ethernet and PROFINET devices to plant and terminal buses in the process industry using SCALANCE network components

Commissioning and diagnostics

The integration of the SCALANCE XC-200EEC in SIMATIC PCS 7 facilitates commissioning and configuring of the components. The topology can be created and the switches configured via the hardware catalog in SIMATIC PCS 7. The devices in SIMATIC PCS 7 can be monitored via PROFINET diagnostics.

SCALANCE XC-200EEC Industrial Ethernet switches can also be integrated in a network management system such as SINEC NMS using the standardized Simple Network Management Protocol (SNMP). In the event of faults in the device, error messages (SNMP traps) can be sent to a network management system (e.g.: SINEC NMS) or as an email to a specified network administrator.

The integrated web server enables configuration and diagnostics settings to be made using a standard web browser (e.g. port configuration). Statistical information can also be read out via the web server (e.g. port utilization).

The following information is displayed on site by LEDs:

- Power
- Port status
- Data traffic
- Signaling contact
- Redundancy manager function (RM)

SCALANCE XC-200EEC line Industrial Ethernet switches can also be monitored using the floating signaling contact.

© Siemens AG 2024

Selection and ordering data

Industrial Ethernet SCALANCE XC-200EEC switches Industrial Ethernet switches with integrated SNMP access, online diagnostics, copper cable diagnostics and PROFINET diagnostics for configuring line, star and ring topologies; with integrated redundancy manager; incl. operating instructions, Industrial Ethernet network manual and configuration software on CD-ROM	
• **SCALANCE XC206-2SFP (EEC)** With six RJ45 ports 10/100 Mbps and two SFP slots for SFPs with 100 or 1000 Mbps; with coated PCBs	6GK5206-2BS00-2FC2
• **SCALANCE XC206-2SFP G (EEC)** With six RJ45 ports 10/100/1 000 Mbps and two SFP slots for SFPs with 1000 Mbps; with coated PCBs	6GK5206-2GS00-2FC2
• **SCALANCE XC208 (EEC)** With eight RJ45 ports 10/100 Mbps; with coated PCBs	6GK5208-0BA00-2FC2
• **SCALANCE XC208G (EEC)** With eight RJ45 ports 10/100/1000 Mbps; with coated PCBs	6GK5208-0GA00-2FC2
• **SCALANCE XC216 (EEC)** With 16x RJ45 ports 10/100 Mbps; with coated PCBs	6GK5216-0BA00-2FC2
• **SCALANCE XC216-4C G (EEC)** With 12x RJ45 ports 10/100/1000 Mbps; with coated PCBs	6GK5216-4GS00-2FC2
• **SCALANCE XC224-4C G (EEC)** With six RJ45 ports 10/100/1000 Mbps; with coated PCBs	6GK5224-4GS00-2FC2
Accessories	
S7-1500 PM 1507 power supply SIMATIC PM 1507 24 V/8 A Regulated power supply for SIMATIC S7-1500 Input: 120/230 V AC Output 24 V DC/8 A	6EP1333-4BA00
C-PLUG (conformal coating) C-PLUG removable data storage medium for simple replacement of devices in the event of a fault; for storing configuration or application data; can be used for SIMATIC NET products with C-PLUG slot, conformal coating	
• 1 pack = 1 unit	6GK1900-0AQ00
SFP plug-in transceiver See "Plug-in transceivers for SCALANCE"	
IE FC TP standard cable GP 2 x 2 (type A) 4-wire, shielded TP installation cable for connection to IE FC RJ45 outlet/IE FC RJ45 plug; PROFINET-compliant; with UL approval; Sold by the meter; Max. length 1 000 m, minimum order quantity 20 m, also available as pre-assembled cable with RJ45 connectors in various lengths	6XV1840-2AH10

Selection and ordering data (continued)

IE FC TP standard cable GP 4X2 TP installation cable Cat6 for connecting to IE FC RJ45 plug 4x2, AWG 24 Sold by the meter Delivery unit max. 1000 m, minimum order quantity 20 m, also available preassembled with RJ45 connectors in various lengths	6XV1878-2A
FO standard cable GP 50/125/1400 Multimode cable, sold by the meter; max. delivery unit 1 000 m, minimum order quantity 20 m, also available pre-assembled with ST/BFOC, SC and LC plugs in various lengths	6XV1873-2A
SCALANCE TAP104 Test access port for the reaction-free extraction of Ethernet data frames (10/100 Mbps) from both transmission directions; extracts complete data traffic, including faulty frames, for further diagnostics.	6GK5104-0BA00-1SA2

Notes:

- You can find more information on the FastConnect range in the "Cabling systems for communication networks in industry" ordering overview
- You can order supplementary components for the SIMATIC NET cabling range from your local contact. Technical support on this subject is available from:

  J. Hertlein

  PD PA CI PRM 4

  Phone: +49 (911) 750-4465

  Email: juergen.hertlein@siemens.com

© Siemens AG 2024

Accessories

	Article No.
S7-1500 PM 1507 power supply SIMATIC PM 1507 24 V/8 A stabilized power supply for SIMATIC S7-1500 Input: 120/230 V AC Output: 24 V DC/8 A	6EP1333-4BA00
SCALANCE PS9230 POE power supply Stabilized power supply for Power over Ethernet (PoE) Input: 120/230 V AC Output: 54 V DC/1.6 A	6GK5923-0PS00-3AA2
SCALANCE PS924 POE power supply Stabilized power supply for Power over Ethernet (PoE) Input: 24 V DC Output: 54 V DC/1.6 A	6GK5924-0PS00-1AA2
C-PLUG (conformal coating) C-PLUG removable data storage medium for simple replacement of devices in the event of a fault; for storing configuration or engineering and application data; can be used in SIMATIC NET products with C-PLUG slot, conformal coating	
• 1 pack = 1 unit	6GK1900-0AQ00
Small Form-Factor Pluggable (SFP) SFPs with LC connection for use in SCALANCE XC206-2G PoE EEC; glass fiber-optic SFPs in single-mode and multimode, 1000 or 10000 Mbps	
• **SFP993-1, 1x 10 Gbps, multimode**	6GK5993-1AT00-8AA0
• **SFP993-1LD, 1x 10 Gbps, single-mode**	6GK5993-1AU00-8AA0
• **SFP993-1LH, 1x 10 Gbps, single-mode**	6GK5993-1AV00-8AA0
• **Preassembled IE cable with 2x SFPs, 1 m**	6GK5980-3CB00-0AA1
• **Preassembled IE cable with 2x SFPs, 2 m**	6GK5980-3CB00-0AA2
• **Preassembled IE cable with 2x SFPs, 3 m**	6GK5980-3CB00-0AA7
See accessories for SCALANCE XC-200 for further 1 Gbps SFPs	
IE FC TP standard cable GP 2 x 2 (type A) 4-core, shielded TP installation cable for connection to IE FC RJ45 outlet/IE FC RJ45 plug; PROFINET-compatible; with UL approval; sold by the meter; max. delivery unit 1000 m, minimum order quantity 20 m, also available as preassembled cable with RJ45 plugs in various lengths	6XV1840-2AH10

Accessories (continued)

	Article No.
IE FC TP standard cable GP 4 x 2 TP installation cable Cat6 for connecting to IE FC RJ45 plug 4x2, AWG 24, sold by the meter; max. delivery unit 1000 m, minimum order quantity 20 m, also available preassembled with RJ45 plugs in various lengths	6XV1878-2A
FO standard cable GP 50/125/1400 Multimode cable, sold by the meter; max. delivery unit 1000 m, minimum order quantity 20 m, also available preassembled with ST/BFOC, SC and LC connectors in various lengths	6XV1873-2A
SCALANCE TAP104 Test access port for the reaction-free extraction of Ethernet data frames (10/100 Mbps) from both transmission directions; extracts complete data traffic, including faulty frames, for further diagnostics.	6GK5104-0BA00-1SA2

© Siemens AG 2024

Technical specifications

Article number	6GK5206-2BS00-2FC2	6GK5206-2GS00-2FC2
product type designation		
product brand name	SCALANCE	SCALANCE
product type designation	XC206-2SFP EEC	XC206-2SFP G EEC
transfer rate		
transfer rate	10 Mbit/s, 100 Mbit/s, 1 000 Mbit/s	10 Mbit/s, 100 Mbit/s, 1 000 Mbit/s
interfaces for communication integrated		
number of electrical connections		
• for network components or terminal equipment	6; RJ45	6; RJ45
number of 10/100 Mbit/s RJ45 ports		
• with securing collar	6	
number of 10/100/1000 Mbit/s RJ45 ports		
• with securing collar		6
interfaces for communication plug-in		
number of electrical connections		
• for SFP	2	2
interfaces other		
number of electrical connections		
• for operator console	1	1
• for signaling contact	1	1
• for power supply	1	1
type of electrical connection		
• for operator console	RJ11	RJ11
• for signaling contact	2-pole terminal block	2-pole terminal block
• for power supply	4-pole terminal block	4-pole terminal block
design of the removable storage		
• C-PLUG	Yes	Yes
operating voltage of the signaling contacts		
• at DC rated value	24 V	24 V
operational current of the signaling contacts		
• at DC maximum	0.1 A	0.1 A
supply voltage, current consumption, power loss		
product component connection for redundant voltage supply	Yes	Yes
type of voltage 1 of the supply voltage	DC	DC
• supply voltage 1 rated value	24 V	24 V
• power loss [W] 1 rated value	6 W	6 W
• consumed current 1 at rated supply voltage maximum	0.25 A	0.25 A
• supply voltage 1 rated value	9.6 ... 31.2 V	9.6 ... 31.2 V
• consumed current 1 maximum	0.5 A	0.5 A
• type of electrical connection 1 for power supply	4-pole terminal block	4-pole terminal block
• product component 1 fusing at power supply input	Yes	Yes
• fuse protection type 1 at input for supply voltage	2.5 A / 125 V	2.5 A / 125 V
ambient conditions		
ambient temperature		
• during operation	-40 ... +70 °C	-40 ... +70 °C
• during storage	-40 ... +85 °C	-40 ... +85 °C
• during transport	-40 ... +85 °C	-40 ... +85 °C
relative humidity		
• at 25 °C without condensation during operation maximum	95 %	95 %
protection class IP	IP20	IP20

© Siemens AG 2024

Technical specifications (continued)

Article number	6GK5206-2BS00-2FC2	6GK5206-2GS00-2FC2
design, dimensions and weights		
design	compact	compact
width	60 mm	60 mm
height	147 mm	147 mm
depth	125 mm	125 mm
net weight	0.52 kg	0.52 kg
product feature conformal coating		Yes
material of the enclosure	Polycarbonate (PC-GF10) / pressure die cast aluminum	Polycarbonate (PC-GF10) / pressure die cast aluminum
fastening method		
• 35 mm top hat DIN rail mounting	Yes	Yes
• wall mounting	Yes	Yes
• S7-300 rail mounting	Yes	Yes
• S7-1500 rail mounting	Yes	Yes
product features, product functions, product components general		
cascading in the case of a redundant ring at reconfiguration time of <\~0.3\~s	50	50
cascading in cases of star topology	any (depending only on signal propagation time)	any (depending only on signal propagation time)
product function		
• QoS according to DSCP	Yes	Yes
product feature		
• Cut Through switching method	No	No
• Store & Forward switching method	Yes	Yes
product functions management, configuration, engineering		
product function		
• CLI	Yes	Yes
• web-based management	Yes	Yes
• MIB support	Yes	Yes
• TRAPs via email	Yes	Yes
• configuration with STEP 7	Yes	Yes
• RMON	Yes	Yes
• SMTP server	No	No
• port mirroring	Yes	Yes
• multiport mirroring	Yes	Yes
• CoS	Yes	Yes
• PROFINET IO diagnosis	Yes	Yes
• switch-managed	Yes	Yes
PROFINET conformity class	B	B
network load class according to PROFINET		3
telegram length for Ethernet maximum	1 632 byte	10 240 byte
protocol is supported		
• Telnet	Yes	Yes
• HTTP	Yes	Yes
• HTTPS	Yes	Yes
• TFTP	Yes	Yes
• BOOTP	No	No
• GMRP	Yes	Yes
• DCP	Yes	Yes
• LLDP	Yes	Yes
• EtherNet/IP	Yes	Yes

© Siemens AG 2024

Technical specifications (continued)

Article number	6GK5206-2BS00-2FC2	6GK5206-2GS00-2FC2
• SNMP v1	Yes	Yes
• SNMP v2	Yes	Yes
• SNMP v3	Yes	Yes
• IGMP (snooping/querier)	Yes	Yes
identification & maintenance function		
• I&M0 - device-specific information	Yes	Yes
• I&M1 - higher level designation/location designation	Yes	Yes
product functions diagnostics		
product function		
• port diagnostics	Yes	Yes
• statistics Packet Size	Yes	Yes
• statistics packet type	Yes	Yes
• error statistics	Yes	Yes
• SysLog	Yes	Yes
product functions VLAN		
product function		
• VLAN - port based	Yes	Yes
• VLAN - protocol-based	No	No
• VLAN - IP-based	No	No
number of VLANs maximum	257	257
number of VLANs - dynamic maximum	257	257
number of VLANs at ring redundancy (HRP; MRP; standby link)	257	257
product functions DHCP		
product function		
• DHCP server	Yes	Yes
• DHCP client	Yes	Yes
• DHCP Option 82	Yes	Yes
• DHCP Option 66	Yes	Yes
• DHCP Option 67	Yes	Yes
product functions redundancy		
protocol is supported Media Redundancy Protocol (MRP)	Yes	Yes
product function		
• media redundancy protocol (MRP) with redundancy manager	Yes	Yes
• Media Redundancy Protocol Interconnection (MRP-I)	Yes	Yes
• of the PROFINET IO device is supported H-Sync forwarding	Yes	Yes
• of the PROFINET IO device is supported PROFINET system redundancy	Yes	Yes
• ring redundancy	Yes	Yes
• high speed redundancy protocol (HRP) with redundancy manager	Yes	Yes
• high speed redundancy protocol (HRP) with standby redundancy	Yes	Yes
• redundancy procedure STP	Yes	Yes
• redundancy procedure RSTP	Yes	Yes
• redundancy procedure RSTP+	Yes	Yes
• redundancy procedure MSTP	Yes	Yes
• Parallel Redundancy Protocol (PRP)/operation in the PRP-network	Yes	Yes
• Parallel Redundancy Protocol (PRP)/Redundant Network Access (RNA)	No	No
• passive listening	Yes	Yes
protocol is supported		
• LACP	Yes	Yes

© Siemens AG 2024

Technical specifications (continued)

Article number	6GK5206-2BS00-2FC2	6GK5206-2GS00-2FC2
system modification during operation		
product function configuration in RUN via CiR/H-CiR	Yes	Yes
product functions security		
product function		
• IEEE 802.1x (radius)	Yes	Yes
• broadcast/multicast/unicast limiter	Yes	Yes
• broadcast blocking	Yes	Yes
protocol is supported		
• SSH	Yes	Yes
• SSL	Yes	Yes
product functions time		
product function		
• SICLOCK support	Yes	Yes
• NTP-client	Yes	Yes
• SNTP client	Yes	Yes
protocol is supported		
• NTP	Yes	Yes
• SNTP	Yes	Yes
standards, specifications, approvals		
certificate of suitability		
• CE marking	Yes	Yes
• Regulatory Compliance Mark (RCM)	Yes	Yes
product conformity according to EMC-guideline	2014/30/EU	2014/30/EU
standard		
• for EMC interference emission	EN 61000-6-4, EN 50121-4	EN 61000-6-4, EN 50121-4
• for immunity to EMC	EN 61000-6-2, EN 50121-4	EN 61000-6-2, EN 50121-4
• for safety from CSA and UL	UL 60950-1 E115352, UL-61010-2 E85972	UL 60950-1 E115352, UL-61010-2 E85972
standards, specifications, approvals hazardous environments		
certificate of suitability		
• ATEX	Yes	Yes
• UKEX	Yes	Yes
• IECEx	Yes	Yes
• ULhazloc approval	Yes	Yes
• CCC for hazardous zone according to GB standard	Yes	Yes
• FM registration	Yes	Yes
standards, specifications, approvals other		
certificate of suitability		
• railway application in accordance with EN 50121-4	Yes	Yes
• RoHS conformity	Yes	Yes
IT security for industrial automation systems according to IEC 62443-4-2:2019	Yes	Yes
standards, specifications, approvals marine classification		
Marine classification association		
• American Bureau of Shipping Europe Ltd. (ABS)		Yes
• French marine classification society (BV)		Yes
• Chinese Classification Society (CCS)		Yes
• DNV GL		Yes
• Korean Register of Shipping (KRS)		Yes
• Lloyds Register of Shipping (LRS)		Yes
• Nippon Kaiji Kyokai (NK)	Yes	

© Siemens AG 2024

Technical specifications (continued)

Article number	6GK5206-2BS00-2FC2	6GK5206-2GS00-2FC2
• Polski Rejestr Statkow (PRS)		Yes
• Royal Institution of Naval Architects (RINA)		Yes
standards, specifications, approvals Environmental Product Declaration		
Environmental Product Declaration	Yes	Yes
Global Warming Potential [CO2 eq]		
• total	153.7 kg	153.7 kg
• during manufacturing	28.4 kg	28.4 kg
• during operation	125.2 kg	125.2 kg
• after end of life	0.02 kg	0.02 kg
product functions general		
MTBF	47 a	55 a
reference code		
• according to IEC 81346-2	KF	KF
• according to IEC 81346-2:2019	KFE	KFE
Warranty period	5 a	5 a
product function is supported identification link	Yes; according to IEC 61406-1:2022	Yes; according to IEC 61406-1:2022
further information internet links		
internet link		
• to website: Selection guide for cables and connectors	https://sup-port.industry.siemens.com/cs/ww/en/view/109766358	https://sup-port.industry.siemens.com/cs/ww/en/view/109766358
• to web page: selection aid TIA Selection Tool	https://www.siemens.com/tstcloud	https://www.siemens.com/tstcloud
• to website: Industrial communication	https://www.siemens.com/simatic-net	https://www.siemens.com/simatic-net
• to web page: SiePortal	https://sieportal.siemens.com/	https://sieportal.siemens.com/
• to website: Image database	https://www.automation.siemens.com/bilddb	https://www.automation.siemens.com/bilddb
• to website: CAx-Download-Manager	https://www.siemens.com/cax	https://www.siemens.com/cax
• to website: Industry Online Support	https://support.industry.siemens.com	https://support.industry.siemens.com

More information

Selection Tool:

To support the selection of SCALANCE network components, the TIA Selection Tool is available at:

www.siemens.com/tst

Ordering overview:

You can find more information on the FastConnect range in the "Cabling technology for communication networks in industry" ordering overview.

© Siemens AG 2024

Overview

The managed Industrial Ethernet switches of the SCALANCE XP-200 product line with 8 or 16 Ethernet ports are optimally suited for setting up cabinet-free automation concepts of Industrial Ethernet networks with transmission rates of 10/100/1000 Mbps in a line, star and ring topology.

- Integral redundancy manager for configuration of high availability networks in ring topologies
- Electric device or network connection
- Rugged metal enclosure with mounting options on SIMATIC ET 200pro rack, ITEM rail mounting or direct wall mounting
- Rugged device connections with industrial-strength M12 plug connectors, M12 D-coded for FastEthernet (10/100 Mbps interfaces), M12 X-coded for Gigabit (1000 Mbps interfaces), PROFINET and EtherNet/IP-compliant M12 connection technology (M12 D-coded, M12 X-coded)
- Redundant power supply (M12 A-coded or M128 L-coded)
- Console port (M12, D-coded)
- Diagnostics on the device by means of prominent LED display with integrated SELECT/SET button (power, link status, data traffic, display mode)
- Integration into the SINEC NMS network management system for integrated network diagnostics with central firmware management
- Fault signaling contact with easy adjustment using SELECT/SET button. Configuration storage using the C-PLUG removable data storage medium
- Grounding screw for external ground connection
- Virtual Local Area Network (VLAN) port-based, protocol-based and IP-based
- IGMP snooping and query (use in EtherNet/IP networks)
- Access Control List (ACL) MAC-based and IP-based
- Link aggregation
- Standby observer for HRP
- IEEE 802.1X (e.g. RADIUS)
- Rapid Spanning Tree Protocol/Multi Spanning Tree Protocol (RSTP/MSTP)
- Remote Network Monitoring (RMON)
- Configuration in the TIA Portal as well as in web-based management (WBM)

Overview (continued)

- H-Sync for implementation of system redundancy together with a SIMATIC S7-1500R
- The XP-200EEC versions are also optimized for use in process automation and feature the following properties:
  - Conformal coating PCBs
  - Max. installation altitude 4000 m
  - Extended temperature range from -40 °C to +70 °C
  - NAMUR NE 21-compliant
  - Firmware support for S2 device and CiR/H-CiR
  - Release and integration capability for SIMATIC PCS 7

Product variants

For use in PROFINET and EtherNet/IP automation systems, device variants are offered that have a corresponding default setting for the respective automation system. However, the use of a device with a PROFINET or EtherNet/IP default setting is possible in the other network at any time by changing the configuration.

- **Full Gigabit M12 switches:**
  - SCALANCE XP208G
    With eight electrical ports (10/100/1000 Mbps, M12 X-coded) for mounting outside the control cabinet (IP65)
  - SCALANCE XP208G EEC
    With eight electrical ports (10/100/1000 Mbps, M12 X-coded) for mounting outside the control cabinet (IP65). Equipped with coated PCBs (conformal coating) for use with increased environmental requirements, e.g. rail applications (EN 50155/45545)

- **Fast Ethernet switches (2nd generation)**
  - Extended PoE power (max. 240 W on all ports), power supply: L-coded, uplink ports
  - SCALANCE XP208 2nd gen.
    With six electrical ports (10/100 Mbps, M12 D-coded) and two electrical ports (10/100/1000 Mbps, M12 X-coded) for mounting outside the control cabinet (IP65)
  - SCALANCE XP208EEC 2nd gen.
    With six electrical ports (10/100 Mbps, M12 D-coded) and two electrical ports (10/100/1000 Mbps, M12 X-coded) for mounting outside the control cabinet (IP65). Equipped with coated PCBs (conformal coating) for use with increased environmental requirements, e.g. rail applications (EN 50155/45545)

- **Fast Ethernet switches (1st generation)**
  - Limited PoE power (max. 120 W on four ports, power supply: A-coded, Gigabit uplink ports only with 16 port variants

- **Switches with PROFINET delivery state**
  - SCALANCE XP208
    With eight electrical ports (10/100 Mbps, M12 D-coded) for mounting outside the control cabinet (IP65)
  - SCALANCE XP208EEC
    With eight electrical ports (10/100 Mbps, M12 D-coded) for mounting outside the control cabinet (IP65). Equipped with coated PCBs (conformal coating) for use with increased environmental requirements, e.g. rail applications (EN 50155/45545)

© Siemens AG 2024

Overview (continued)

- SCALANCE XP208PoE EEC

  with four electrical ports (10/100 Mbps, M12 D-coded) and four electrical PoE ports (10/100 Mbps M12 D-coded) according to IEEE 802.3at type 2 for mounting outside the control cabinet (IP65). Equipped with coated PCBs (conformal coating) for use where increased environmental requirements prevail, e.g. rail applications (EN 50155/45545). Suitable IP65 power supply (PSP9230PoE) optionally available.

- SCALANCE XP216

  With twelve electrical ports (10/100 Mbps, M12 D-coded) and 4 electrical ports (10/100/1000 Mbps, M12 X-coded) for mounting outside the control cabinet (IP65)

- SCALANCE XP216EEC

  With twelve electrical ports (10/100 Mbps, M12 D-coded) and 4 electrical ports (10/100/1000 Mbps, M12 X-coded) for mounting outside the control cabinet (IP65). Equipped with coated PCBs (conformal coating) for use where increased environmental requirements prevail, e.g. rail applications (EN 50155/45545)

- SCALANCE XP216PoE EEC

  With six electrical ports (10/100 Mbps, M12 D-coded), six electrical PoE ports (10/100 Mbps, M12 D-coded) according to IEEE 802.3at Type 2, two electrical ports (10/100/1000 Mbps, M12 X-coded) and two electrical PoE ports (10/100/1000 Mbps, M12 X-coded) according to IEEE 802.3at Type 2. The switch can also be operated with only two PoE ports (10/100 Mbps, M12 D-coded) according to IEEE 802.3at type 2 and two PoE ports (10/100/1000 Mbps, M12 X-coded) according to IEEE 802.3at type 2. The switch is designed for mounting outside the control cabinet (IP65), and is equipped with coated PCBs (conformal coating) for use where increased environmental requirements prevail, e.g. rail applications (EN 50155/45545). Suitable IP65 power supply (PSP9230PoE) optionally available.

- **Switches with EtherNet/IP delivery state**
  - SCALANCE XP208

    With eight electrical ports (10/100 Mbps, M12 D-coded) for mounting outside the control cabinet (IP65)

  - SCALANCE XP216

    With twelve electrical ports (10/100 Mbps, M12 D-coded) and 4 electrical ports (10/100/1000 Mbps, M12 X-coded) for mounting outside the control cabinet (IP65)

Benefits

get Designed for Industry

- Ideal solution for configuring Industrial Ethernet line, star and ring topologies
- Industrial-grade plug-in connection (10/100 Mbps M12, D-coded and 10/100/1000 Mbps, X-coded)
- High network availability through configuration of redundant ring topologies (redundancy manager integrated)
- Integration of SCALANCE XP-200 Industrial Ethernet switches in existing network management systems (e.g. SINEC NMS) through SNMP access
- Easy integration in the process diagnostics and system diagnostics with PROFINET and EtherNet/IP
- Integrated configuration and diagnostics in STEP 7 / TIA Portal bring significant advantages during the engineering, commissioning, and operating phases of a plant
- C-PLUG enables fast device replacement in the event of an error
- H-Sync for implementation of system redundancy together with a SIMATIC S7-1500R
- Integration of switches in systems with simple S2 system redundancy and Configuration in Run (CiR/HCiR)
- Since Configuration in Run (CiR/H-CiR) is supported, PROFINET-defined configuration changes to the switch are performed during operation
- Easy integration in the process and system diagnostics with PROFINET via SIMATIC PCS 7
- Suitable PoE power supply (PSP9230PoE) with direct mounting option of SCALANCE XP-200 switches available

© Siemens AG 2024

Application

The SCALANCE XP-200 Industrial Ethernet switches enable cost-effective configuration of Industrial Ethernet line, star or ring topologies with switching functionality for networks in which high availability or remote diagnostic capabilities are required.

Features:

- Industry-compatible thanks to rugged metal housing (e.g. for use in rail applications with increased mechanical loads)
- Use outside the control cabinet also possible (IP65 degree of protection)
- Various mounting options (SIMATIC ET 200pro rack, ITEM rail mounting, wall mounting)
- Versatile diagnostic and management capabilities: e.g. signaling contact, remote access via SNMP, web-based management and integrated diagnostics with PROFINET and EtherNet/IP
- Integration into the SINEC NMS network management system for end-to-end network diagnostics with central firmware management
- Use in rail applications thanks to EN 50155 and EN 45545 approval and conformal coating PCBs
- Use in harsh ambient conditions (-40 °C to +70 °C)
- Installation altitudes up to 4 000 m
- NAMUR NE 21-compliant
- Firmware support of: S2 device and CiR/H-CiR. The devices are released for SIMATIC PCS 7 and are integration-capable

Design

The SCALANCE XP-200 Industrial Ethernet switches with rugged metal enclosure are optimized for use outside the control cabinet. Mounting options on ET 200pro rack, ITEM rail mounting or direct wall mounting in variety of mounting positions.

The switches with IP65 degree of protection feature:

- Two 4-pin M12 connections (L-coded) or two 4-pin M12 connections (A-coded) for connection of redundant supply voltage (2 x 24 V DC)
- An LED display for display of status information using SELECT/SET button (power, link status, data traffic, power supply, signaling contact)
- One 2-pole M12 interface (B-coded) for connecting the floating signaling contact
- One 2-pole M12 interface (D-coded) as console access

The SCALANCE XP-200 switches are available with the following port types:

- 10/100 Mbps, M12 connection (D-coded);

  automatic detection of the data rate (10 or 100 Mbps), with autosensing and autocrossover function for connection of IE FC cables via IE FC M12 plug PRO 2x2 up to 100 m.
- 10/100/1000 Mbps, M12 connection (X-coded);

  automatic detection of the data rate (10 or 100 or 1000 Mbps), with autosensing and autocrossover function for connection of IE FC cables via IE FC M12 plug PRO 4x2 up to 100 m.

© Siemens AG 2024

Function

- Configuration of electrical Industrial Ethernet line, star and ring topologies
- Fast redundancy in the ring with:
  - High Speed Redundancy Protocol (HRP); up to 0.3 seconds for reconfiguration of the ring with 50 switches in the ring
  - PROFINET MRP (Media Redundancy Protocol); up to 0.2 seconds for reconfiguration of the ring with 50 switches in the ring
- The functioning of the ring is continuously monitored by the integrated redundancy manager. It recognizes failure of a transmission link in the ring or failure of a SCALANCE XP-200 and activates the substitute path within 0.3 seconds with HRP or 0.2 seconds with MRP
- Use in ring topologies together with SCALANCE X-200, X-300, XM-400 and XR-500

Redundant connection of rings via HRP standby master/slave function

- Uncrossed connecting cables can be used due to autocrossover function integrated in the ports
- Easy diagnostics using signaling contact, SNMP and web browser
- Easy copper cable diagnostics via web browser for localizing cable breaks
- Incorporation in the integrated system diagnostics of the TIA Portal with PROFINET diagnostics of data traffic using a configurable mirror port and a commercially available network analyzer (e.g. via BUSAN-ALYZER AGENT XM-400)
- Optimized support of PROFINET real-time communication (RT) through prioritizing
- Fast device replacement in the event of a fault by using the optional C-PLUG removable data storage medium (not included in scope of supply)

Network topology and network configuration

The SCALANCE XP-200 Industrial Ethernet switches in degree of protection IP65 are typically mounted outside the control cabinet. They can be installed in line, star and ring electrical system topologies.

When configuring the network, the following boundary conditions must be observed:

- Length of the twisted pair cable between two SCALANCE X Industrial Ethernet switches:
  - Max. 100 m with IE FC cable and IE FC M12 plug PRO
- IP address:

  The IP address is assigned via the DHCP (Dynamic Host Configuration Protocol). If there is no corresponding server in the network, the IP address can be assigned using the supplied software tool PST (Primary Setup Tool) or STEP 7/TIA Portal.

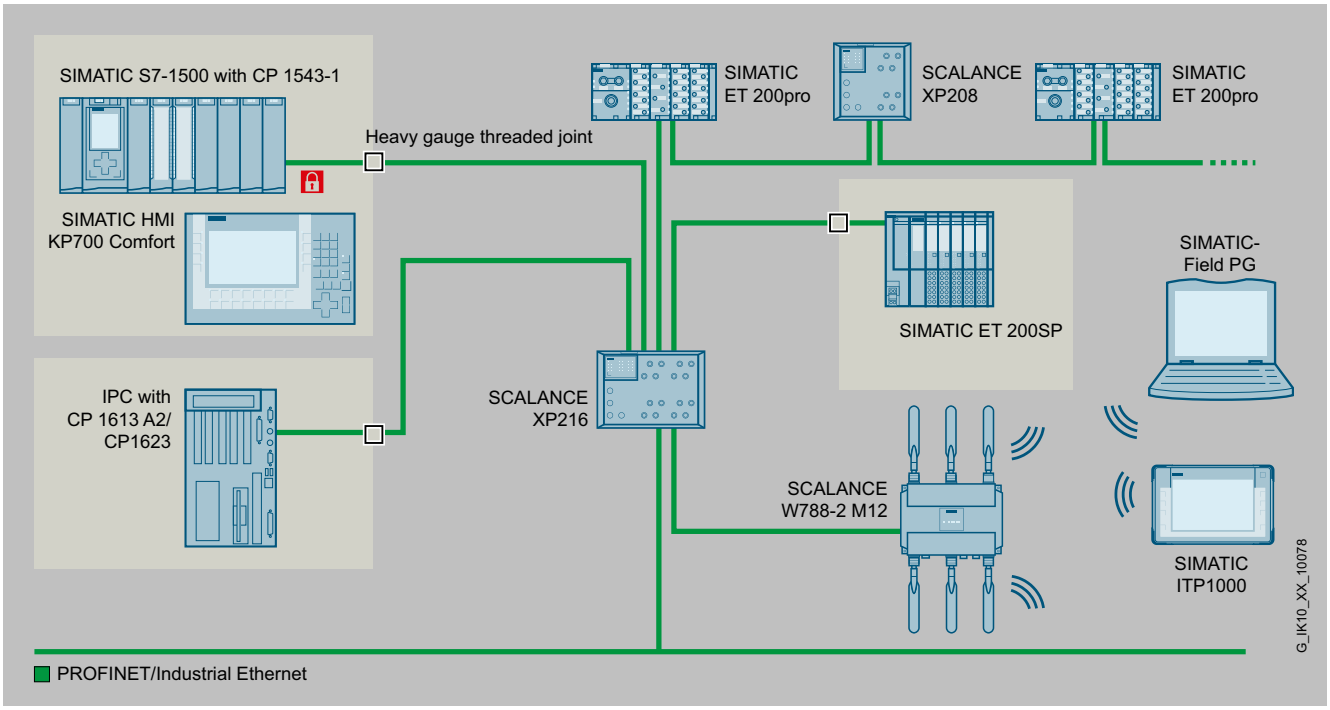

SCALANCE XP208 and SCALANCE XP216 in factory automation

© Siemens AG 2024

Function (continued)

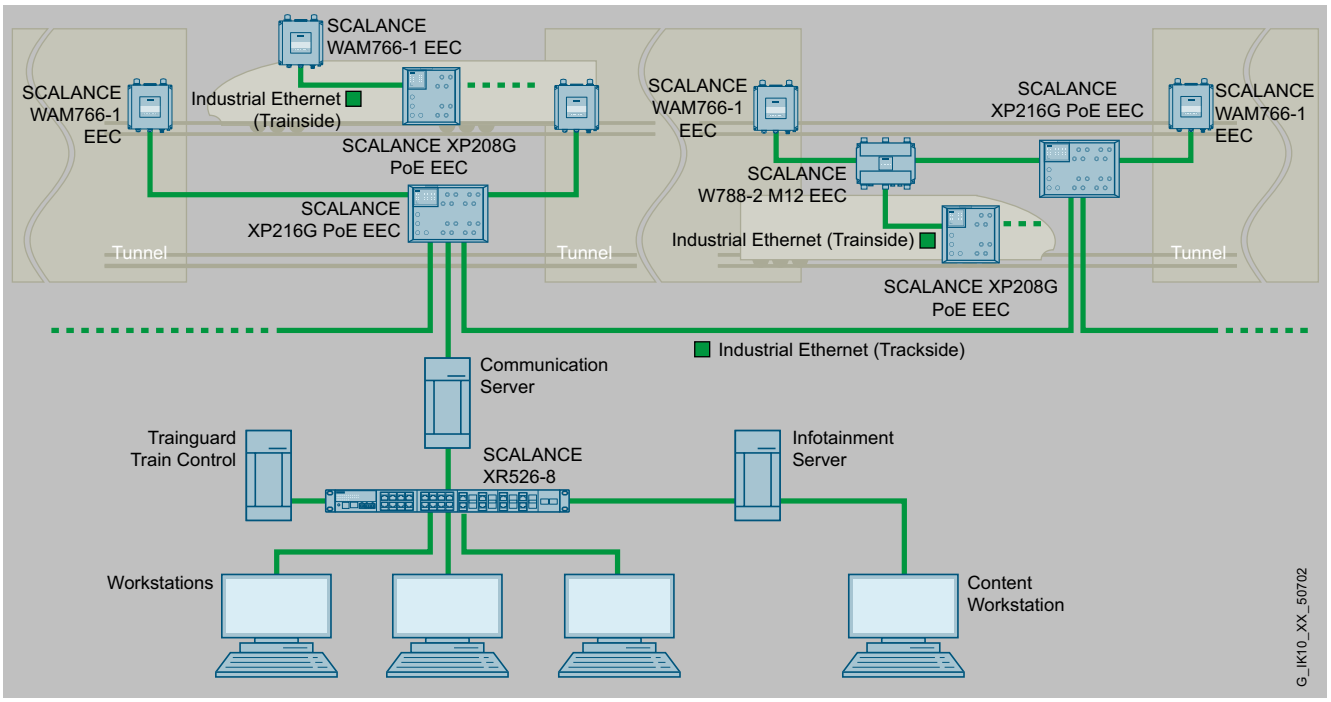

SCALANCE XP208EEC and SCALANCE XP216EEC on trains (train-side) and along the track (track-side)

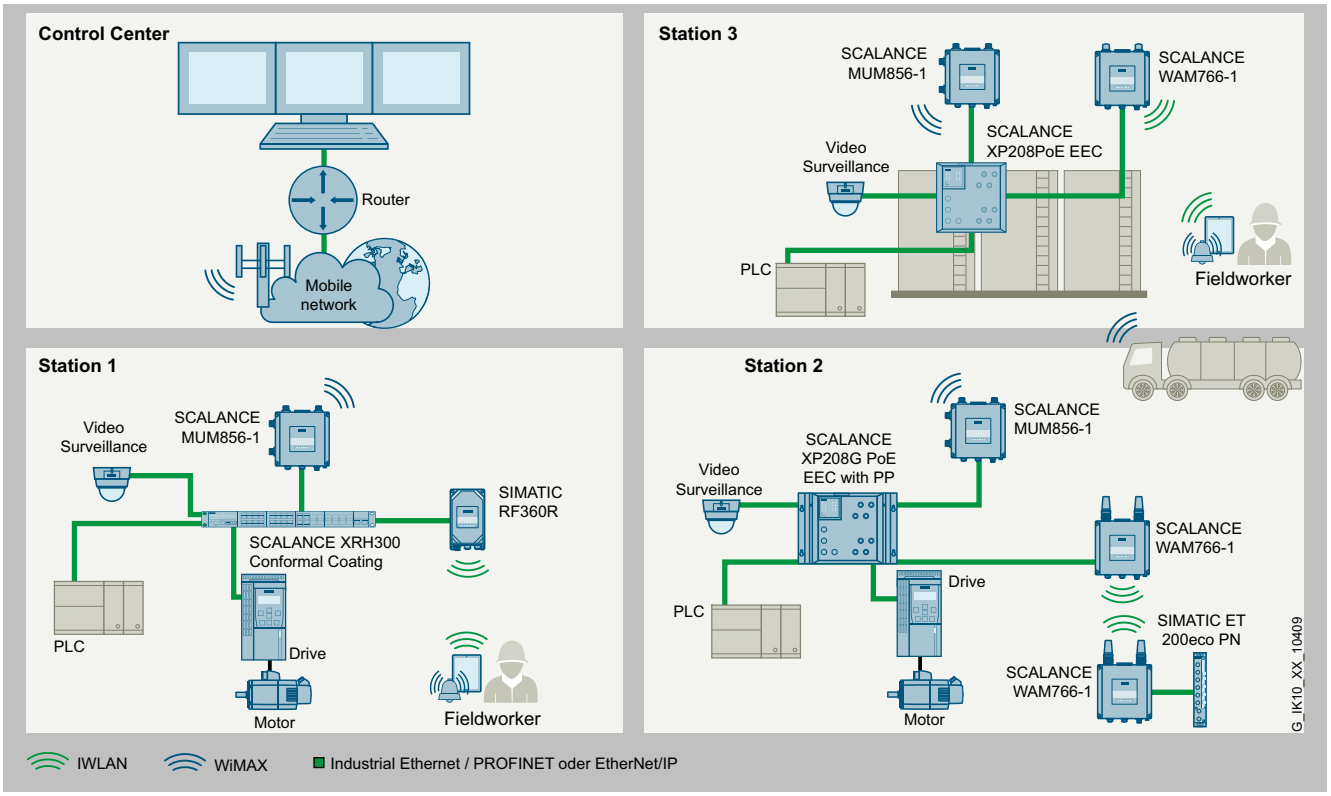

Implementation of a network in a harsh environment with SCALANCE XP208EEC and SCALANCE XP216EEC for communication of distributed stations with WIMAX base

© Siemens AG 2024

Function (continued)

Commissioning and diagnostics

PROFINET diagnostic interrupts from SCALANCE XP-200 switches can be displayed with the appropriate SIMATIC engineering tools and processed in the PLC with the enhanced diagnostic function. The engineering outlay for the PLC and HMI has been drastically reduced due to the complete integration in the SIMATIC concept for system error messages.

SCALANCE XP-200 Industrial Ethernet switches can also be integrated in a network management system (e.g. SINEC NMS) using the standardized Simple Network Management Protocol (SNMP). In the event of faults in the device, error messages (SNMP traps) can be sent to a network management system (e.g. SINEC NMS) or as an email to a specified network administrator.

The integrated web server enables configuration and diagnostics settings to be made using a standard web browser (e.g. port configuration). Statistical information can also be read out over the web server (e.g. port capacity utilization).

The following information is displayed on site by LEDs:

- Power
- Port status
- Data traffic
- Signaling contact
- Redundancy manager function

The Industrial Ethernet switches of the SCALANCE XP-200 line can also be monitored using the floating signaling contact.

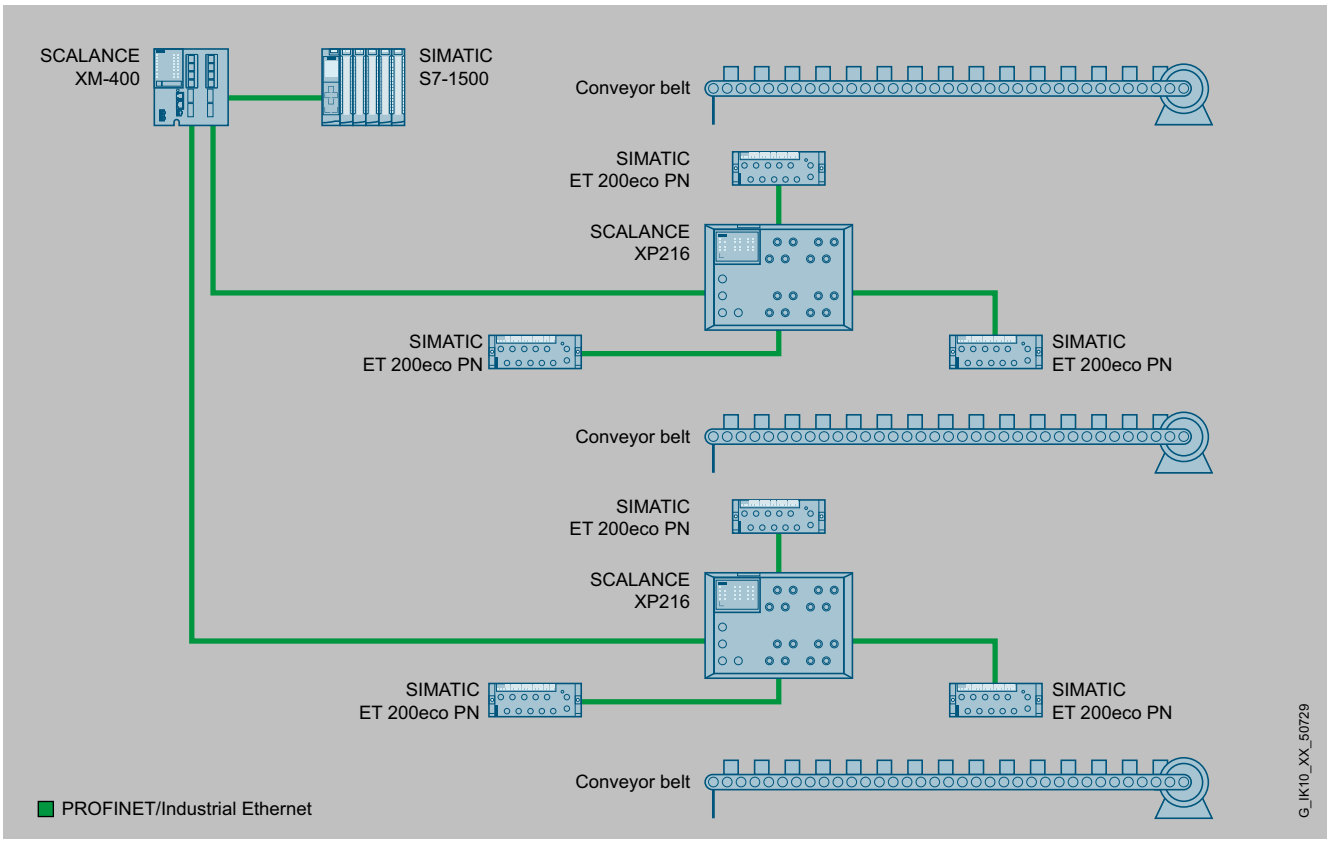

Cabinet-free use of Industrial Ethernet switches on the machine itself with SCALANCE XP-200

© Siemens AG 2024

Selection and ordering data

SCALANCE XP-200 Industrial Ethernet switches Industrial Ethernet switches with integrated SNMP access, web diagnostics, copper cable diagnostics and PROFINET diagnostics, for configuration of electrical line, star and ring topologies; with integrated redundancy manager; incl. operating instructions, Industrial Ethernet network manual and configuration software on CD-ROM	
• With electrical ports and PROFINET basic setting	
- **SCALANCE XP208** With eight 10/100 Mbps M12 sockets (D-coded)	6GK5208-0HA00-2AS6
- **SCALANCE XP208EEC** With eight 10/100 Mbps M12 sockets (D-coded) with rail approval EN 50155/45545	6GK5208-0HA00-2ES6
- **SCALANCE XP208PoE EEC** With four 10/100 Mbps M12 sockets (D-coded) and four 100/100 Mbps M12 PoE sockets (D-coded) with rail approval EN 50155/45545	6GK5208-0UA00-5ES6
- **SCALANCE XP216** With twelve 10/100 Mbps M12 sockets (D-coded) and four 10/100/1 000 Mbps M12 sockets (X-coded)	6GK5216-0HA00-2AS6
- **SCALANCE XP216EEC** With twelve 10/100 Mbps M12 sockets (D-coded) and four 10/100/1 000 Mbps M12 sockets (X-coded) with rail approval EN 50155/45545	6GK5216-0HA00-2ES6
- **SCALANCE XP216PoE EEC** With 12 10/100 Mbps RJ45 ports and two fiber-optic cable ports	6GK5216-0UA00-5ES6
• With electrical ports and EtherNet/IP basic setting	
- **SCALANCE XP208** With eight 10/100 Mbps M12 sockets (D-coded)	6GK5208-0HA00-2TS6
- **SCALANCE XP216** With twelve 10/100 Mbps M12 sockets (D-coded) and four 10/100/1 000 Mbps M12 sockets (X-coded)	6GK5216-0HA00-2TS6
Accessories	
SITOP PSU100P IP67 Stabilized power supply Input: 120/230 V AC Output: 24 V DC/8 A	6EP1334-7CA00
C-PLUG Removable data storage medium for simple replacement of devices in the event of a fault; for storing configuration or engineering and application data; can be used in SIMATIC NET products with C-PLUG slot	6GK1900-0AB10
C-PLUG with conformal coating Removable data storage medium for simple replacement of devices in the event of a fault; for storing configuration or engineering and application data; can be used in SIMATIC NET products with C-PLUG slot	6GK1900-0AQ00

Selection and ordering data (continued)

IE connecting cable M12-90/M12-90 Flexible connecting cable (4-core), pre-assembled with 4-pole M12 plugs (D-coded), 90° cable outlet, for connection of IE devices such as SCALANCE XP-200, ET 200pro and ET 200eco PN, IP65/67 Length:	
• 0.3 m	6XV1870-8GE30
• 0.5 m	6XV1870-8GE50
• 1 m	6XV1870-8GH10
• 1.5 m	6XV1870-8GH15
• 2 m	6XV1870-8GH20
• 3 m	6XV1870-8GH30
• 5 m	6XV1870-8GH50
• 10 m	6XV1870-8GN10
• 15 m	6XV1870-8GN15
IE TP cord M12-90/M12-90 Pre-assembled IE flexible cable, with 2 M12 connectors (X-coded), 90° cable outlet Length:	
• 0.5 m	6XV1878-5GE50
• 1 m	6XV1878-5GH10
• 1.5 m	6XV1878-5GH15
• 2 m	6XV1878-5GH20
• 3 m	6XV1878-5GH30
• 5 m	6XV1878-5GH50
• 10 m	6XV1878-5GN10
• 15 m	6XV1878-5GN15
Power connecting cable M12-90/M12-90 Flexible power cable (4-core), pre-assembled with M12 male connector and M12 female connector (A-coded), 90° cable outlet, for supplying SCALANCE XP-200, ET 200pro and ET 200eco PN, IP65/67 Length:	
• 0.3 m	6XV1801-5GE30
• 0.5 m	6XV1801-5GE50
• 1 m	6XV1801-5GH10
• 1.5 m	6XV1801-5GH15
• 2 m	6XV1801-5GH20
• 3 m	6XV1801-5GH30
• 5 m	6XV1801-5GH50
• 10 m	6XV1801-5GN10
• 15 m	6XV1801-5GN15
SCALANCE TAP104 Test access port for the reaction-free extraction of Ethernet data frames (10/100 Mbps) from both transmission directions; extracts complete data traffic, including faulty frames, for further diagnostics.	6GK5104-0BA00-1SA2

Notes:

© Siemens AG 2024

Selection and ordering data (continued)

- You can find more information on the FastConnect range in the "Cabling technology for communication networks in industry" ordering overview
- You can order supplementary components for the SIMATIC NET cabling range from your local contact. Technical advice on this subject is available from:

  J. Hertlein

  PD PA CI PRM 4

  Phone: +49 (911) 750-4465

  Email: juergen.hertlein@siemens.com

Accessories

	Article No.
SCALANCE PSP9230PoE IP65 power supply for Power over Ethernet (PoE); SCALANCE XP208 or XP216 can be mounted on power supply unit Input: 100-240 V AC, 110-250 V DC Output: 24V DC/1A + 54V DC/4A	6GK5923-0PS00-2AA6
SITOP PSU100P IP67 Stabilized power supply Input: 120/230 V AC Output: 24 V DC/8 A	6EP1334-7CA00
Power M12 cable connector PRO (S-coded)	6GK1907-0DC00-6AA4
C-PLUG Removable data storage medium for simple replacement of devices in the event of a fault; for storing configuration or engineering and application data; can be used in SIMATIC NET products with C-PLUG slot	6GK1900-0AB10
C-PLUG with conformal coating Removable data storage medium for simple replacement of devices in the event of a fault; for storing configuration or engineering and application data; can be used in SIMATIC NET products with C-PLUG slot	6GK1900-0AQ00
M12-90/M12-90 IE connecting cable Flexible connecting cable (4-core), preassembled with 4-pole M12 plugs (D-coded), 90° cable outlet, for connection of IE devices such as SCALANCE XP-200, ET 200pro and ET 200eco PN, IP65/67 Length:	
• 0.3 m	6XV1870-8GE30
• 0.5 m	6XV1870-8GE50
• 1 m	6XV1870-8GH10
• 1.5 m	6XV1870-8GH15
• 2 m	6XV1870-8GH20
• 3 m	6XV1870-8GH30
• 5 m	6XV1870-8GH50
• 10 m	6XV1870-8GN10
• 15 m	6XV1870-8GN15
IE TP cord M12-90/M12-90 Preassembled IE flexible cable, with two M12 plugs (X-coded), 90 ° cable outlet Length:	
• 0.5 m	6XV1878-5GE50
• 1 m	6XV1878-5GH10
• 1.5 m	6XV1878-5GH15
• 2 m	6XV1878-5GH20
• 3 m	6XV1878-5GH30
• 5 m	6XV1878-5GH50
• 10 m	6XV1878-5GN10
• 15 m	6XV1878-5GN15

© Siemens AG 2024

Accessories (continued)

	Article No.
Power connecting cable M12-90/M12-90 Flexible power cable (4-core), preassembled with M12 male connector and M12 female connector (A-coded), 90° cable outlet, for supplying SCALANCE XP-200, ET 200pro and ET 200eco PN, IP65/67 Length:	
• 0.3 m	6XV1801-5GE30
• 0.5 m	6XV1801-5GE50
• 1 m	6XV1801-5GH10
• 1.5 m	6XV1801-5GH15
• 2 m	6XV1801-5GH20
• 3 m	6XV1801-5GH30
• 5 m	6XV1801-5GH50
• 10 m	6XV1801-5GN10
• 15 m	6XV1801-5GN15
SCALANCE TAP104 Test access port for the reaction-free extraction of Ethernet data frames (10/100 Mbps) from both transmission directions; extracts complete data traffic, including faulty frames, for further diagnostics.	6GK5104-0BA00-1SA2

© Siemens AG 2024

Technical specifications

Article number	6GK5208-0HA00-2AS6	6GK5208-0HA10-2AS6	6GK5208-0UA00-5ES6
product type designation			
product brand name	SCALANCE	SCALANCE	SCALANCE
product type designation	XP208	XP208	XP208PoE EEC
transfer rate			
transfer rate	10 Mbit/s, 100 Mbit/s	10 Mbit/s, 100 Mbit/s, 1 000 Mbit/s	10 Mbit/s, 100 Mbit/s
interfaces for communication integrated			
number of electrical connections			
• for network components or terminal equipment	8	8	8
number of 10/100 Mbit/s M12-ports (D-coded)	8	6	4
number of 10/100 Mbit/s M12-ports (D-coded) with PoE			4
number of 10/100/1000 Mbit/s M12-ports (X-coded)		2	
interfaces other			
number of electrical connections			
• for operator console	1	1	1
• for signaling contact	1	1	1
• for power supply	2	2	2
type of electrical connection			
• for operator console	5 pin M12 socket (A coded)	5 pin M12 socket (A coded)	5 pin M12 socket (A coded)
• for signaling contact	5-pin M12 connector (B-coded)	5-pin M12 connector (B-coded)	5-pin M12 connector (B-coded)
• for power supply	4-pin M12 plug (A-coded)		4-pin M12 plug (A-coded)
design of the removable storage			
• C-PLUG	Yes	Yes	Yes
operating voltage of the signaling contacts			
• at DC rated value	24 V	24 V	54 V
operational current of the signaling contacts			
• at DC maximum	0.1 A	0.1 A	0.1 A
supply voltage, current consumption, power loss			
product component connection for redundant voltage supply	Yes	Yes	Yes
supplied active power of PSE with PoE			
• per port maximum			30 W
• total maximum			120 W
type of voltage 1 of the supply voltage	DC	DC	DC
• supply voltage 1 rated value	24 V	24 V	54 V
• power loss [W] 1 rated value	5 W	4.8 W	9 W
• consumed current 1 at rated supply voltage maximum	0.2 A	0.2 A	2.5 A
• supply voltage 1 rated value	19.2 ... 28.8 V	19.2 ... 31.2 V	46 ... 57 V
• consumed current 1 maximum	0.21 A		2.4 A
• type of electrical connection 1 for power supply	4-pin M12 plug (A-coded)		4-pin M12 plug (A-coded)
• product component 1 fusing at power supply input	Yes	Yes	Yes
• fuse protection type 1 at input for supply voltage	5 A / 60 V	5 A / 60 V	5 A / 60 V
ambient conditions			
ambient temperature			
• during operation	-40 ... +70 °C	-40 ... +70 °C	-40 ... +70 °C
• during storage	-40 ... +70 °C	-40 ... +85 °C	-40 ... +70 °C
• during transport	-40 ... +70 °C	-40 ... +85 °C	-40 ... +70 °C
• note			EEC variants with EN 50155 support for 10 minutes: -40 °C ... +85 °C

© Siemens AG 2024

Technical specifications (continued)

Article number	6GK5208-0HA00-2AS6	6GK5208-0HA10-2AS6	6GK5208-0UA00-5ES6
relative humidity			
• at 25 °C without condensation during operation maximum	95 %	95 %	95 %
protection class IP	IP65	IP65	IP65
design, dimensions and weights			
design	compact	compact	compact
width	200 mm	200 mm	200 mm
height	200 mm	200 mm	200 mm
depth	49 mm	49 mm	49 mm
net weight	1.8 kg	1.8 kg	1.8 kg
product feature conformal coating			Yes
material of the enclosure	Aluminum	Aluminum	Aluminum
fastening method	ET200pro module carrier		ET200pro module carrier
• wall mounting	Yes	Yes	Yes
product features, product functions, product components general			
cascading in the case of a redundant ring at reconfiguration time of <\~0.3\~s	50	50	50
cascading in cases of star topology	any (depending only on signal propagation time)	any (depending only on signal propagation time)	any (depending only on signal propagation time)
product functions management, configuration, engineering			
product function			
• CLI	Yes	Yes	Yes
• web-based management	Yes	Yes	Yes
• MIB support	Yes	Yes	Yes
• TRAPs via email	Yes	Yes	Yes
• configuration with STEP 7	Yes	Yes	Yes
• RMON	Yes	Yes	Yes
• port mirroring	Yes	Yes	Yes
• multiport mirroring	Yes	Yes	Yes
• CoS	Yes	Yes	Yes
• with IRT PROFINET IO switch	No	No	No
• PROFINET IO diagnosis	Yes	Yes	Yes
• switch-managed	Yes	Yes	Yes
PROFINET conformity class	B	B	B
network load class according to PROFINET	3	3	3
telegram length for Ethernet maximum	1 518 byte	10 240 byte	1 518 byte
protocol is supported			
• Telnet	Yes	Yes	Yes
• HTTP	Yes	Yes	Yes
• HTTPS	Yes	Yes	Yes
• TFTP	Yes	Yes	Yes
• FTP	Yes	Yes	Yes
• BOOTP	No	No	No
• DCP	Yes	Yes	Yes
• LLDP	Yes	Yes	Yes
• EtherNet/IP	Yes	Yes	Yes
• SNMP v1	Yes	Yes	Yes
• SNMP v2	Yes	Yes	Yes
• SNMP v3	Yes	Yes	Yes

© Siemens AG 2024

Technical specifications (continued)

Article number	6GK5208-0HA00-2AS6	6GK5208-0HA10-2AS6	6GK5208-0UA00-5ES6
• IGMP (snooping/querier)	Yes	Yes	Yes
identification & maintenance function			
• I&M0 - device-specific information	Yes	Yes	Yes
• I&M1 - higher level designation/location designation	Yes	Yes	Yes
product functions diagnostics			
product function			
• port diagnostics	Yes	Yes	Yes
• statistics Packet Size	Yes	Yes	Yes
• statistics packet type	Yes	Yes	Yes
• error statistics	Yes	Yes	Yes
• SysLog	Yes	Yes	Yes
product functions VLAN			
product function			
• VLAN - port based	Yes	Yes	Yes
• VLAN - protocol-based	No	No	No
• VLAN - IP-based	No	No	No
• VLAN dynamic	No	No	No
number of VLANs maximum	257	257	257
number of VLANs - dynamic maximum	257	257	257
number of VLANs at ring redundancy (HRP; MRP; standby link)	257	257	257
product functions DHCP			
product function			
• DHCP server	Yes	Yes	Yes
• DHCP client	Yes	Yes	Yes
• DHCP Option 82	Yes	Yes	Yes
• DHCP Option 66	Yes	Yes	Yes
• DHCP Option 67	Yes	Yes	Yes
product functions redundancy			
protocol is supported Media Redundancy Protocol (MRP)	Yes	Yes	Yes
product function			
• media redundancy protocol (MRP) with redundancy manager	Yes	Yes	Yes
• Media Redundancy Protocol Interconnection (MRP-I)	Yes	Yes	Yes
• of the PROFINET IO device is supported H-Sync forwarding	Yes	Yes	Yes
• of the PROFINET IO device is supported PROFINET system redundancy	Yes	Yes	Yes
• ring redundancy	Yes	Yes	Yes
• high speed redundancy protocol (HRP) with redundancy manager	Yes	Yes	Yes
• high speed redundancy protocol (HRP) with standby redundancy	Yes	Yes	Yes
• redundancy procedure RSTP	Yes	Yes	Yes
• redundancy procedure RSTP+	Yes	Yes	Yes
• redundancy procedure MSTP	Yes	Yes	Yes
• passive listening	Yes	Yes	Yes
system modification during operation			
product function configuration in RUN via CiR/H-CiR	Yes	Yes	Yes

© Siemens AG 2024

Technical specifications (continued)

Article number	6GK5208-0HA00-2AS6	6GK5208-0HA10-2AS6	6GK5208-0UA00-5ES6
product functions security			
product function			
• RADIUS client	Yes	Yes	Yes
protocol is supported			
• SSH	Yes	Yes	Yes
• SSL	Yes	Yes	Yes
product functions time			
product function			
• SICLOCK support	Yes	Yes	Yes
• NTP-client	Yes	Yes	Yes
• SNTP client	Yes	Yes	Yes
protocol is supported			
• NTP	Yes	Yes	Yes
• SNTP	Yes	Yes	Yes
standards, specifications, approvals			
certificate of suitability			
• CE marking	Yes	Yes	Yes
• UKCA marking	Yes	Yes	Yes
• KC approval	Yes		Yes
• Regulatory Compliance Mark (RCM)	Yes		Yes
standard			
• for safety from CSA and UL	UL 60950-1 E115352, CSA C22.2 No. 60950-1		UL 60950-1 E115352
standards, specifications, approvals hazardous environments			
certificate of suitability			
• ATEX	Yes		Yes
• UKEX	Yes		Yes
• IECEx	Yes		Yes
• ULhazloc approval	Yes		
• CCC for hazardous zone according to GB standard	Yes		Yes
• FM registration	Yes		Yes
standards, specifications, approvals other			
certificate of suitability			
• railway application in accordance with EN 50155	No		Yes
• railway application in accordance with EN 50124-1	No		Yes
• fire protection in accordance with EN 45545-2			Yes
• RoHS conformity	Yes	Yes	Yes
IT security for industrial automation systems according to IEC 62443-4-2:2019	Yes		Yes
standards, specifications, approvals marine classification			
Marine classification association			
• American Bureau of Shipping Europe Ltd. (ABS)	Yes		
• French marine classification society (BV)	Yes		
• DNV GL	Yes		
• Korean Register of Shipping (KRS)	Yes		
• Lloyds Register of Shipping (LRS)	Yes		
• Nippon Kaiji Kyokai (NK)	Yes		
• Polski Rejestr Statkow (PRS)	Yes		
• Royal Institution of Naval Architects (RINA)	Yes		

© Siemens AG 2024

Technical specifications (continued)

Article number	6GK5208-0HA00-2AS6	6GK5208-0HA10-2AS6	6GK5208-0UA00-5ES6
standards, specifications, approvals Environmental Product Declaration			
Environmental Product Declaration	Yes		
Global Warming Potential [CO2 eq]			
• total	200.66 kg		
• during manufacturing	61.47 kg		
• during operation	138.92 kg		
• after end of life	0.27 kg		
product functions general			
MTBF		52 a	
reference code			
• according to IEC 81346-2	KF		KF
• according to IEC 81346-2:2019	KFE		KFE
Warranty period	5 a	5 a	5 a
product function is supported identification link		Yes; according to IEC 61406-1:2022	
further information internet links			
internet link			
• to website: Selection guide for cables and connectors	https://support.industry.siemens.com/cs/ww/en/view/109766358	https://support.industry.siemens.com/cs/ww/en/view/109766358	https://support.industry.siemens.com/cs/ww/en/view/109766358
• to web page: selection aid TIA Selection Tool	https://www.siemens.com/tstcloud	https://www.siemens.com/tstcloud	https://www.siemens.com/tstcloud
• to website: Industrial communication	https://www.siemens.com/simatic-net	https://www.siemens.com/simatic-net	https://www.siemens.com/simatic-net
• to web page: SiePortal	https://sieportal.siemens.com/	https://sieportal.siemens.com/	https://sieportal.siemens.com/
• to website: Image database	https://www.automation.siemens.com/bilddb	https://www.automation.siemens.com/bilddb	https://www.automation.siemens.com/bilddb
• to website: CAx-Download-Manager	https://www.siemens.com/cax	https://www.siemens.com/cax	https://www.siemens.com/cax
• to website: Industry Online Support	https://support.industry.siemens.com	https://support.industry.siemens.com	https://support.industry.siemens.com

Article number	6GK5216-0HA00-2AS6	6GK5216-0UA00-5ES6
product type designation		
product brand name	SCALANCE	SCALANCE
product type designation	XP216	XP216PoE EEC
transfer rate		
transfer rate	10 Mbit/s, 100 Mbit/s, 1 000 Mbit/s	10 Mbit/s, 100 Mbit/s, 1 000 Mbit/s
interfaces for communication integrated		
number of electrical connections		
• for network components or terminal equipment	16	16
number of 10/100 Mbit/s M12-ports (D-coded)	12	6
number of 10/100 Mbit/s M12-ports (D-coded) with PoE		6
number of 10/100/1000 Mbit/s M12-ports (X-coded)	4	2
number of 10/100/1000 Mbit/s M12-ports (X-coded) with PoE		2
interfaces other		
number of electrical connections		
• for operator console	1	1
• for signaling contact	1	1
• for power supply	1	1
type of electrical connection		
• for operator console	5 pin M12 socket (A coded)	5 pin M12 socket (A coded)
• for signaling contact	5-pin M12 connector (B-coded)	5-pin M12 connector (B-coded)
• for power supply	4-pin M12 plug (A-coded)	4-pin M12 plug (A-coded)

© Siemens AG 2024

Technical specifications (continued)

Article number	6GK5216-0HA00-2AS6	6GK5216-0UA00-5ES6
design of the removable storage		
• C-PLUG	Yes	Yes
operating voltage of the signaling contacts		
• at DC rated value	24 V	54 V
operational current of the signaling contacts		
• at DC maximum	0.1 A	0.1 A
supply voltage, current consumption, power loss		
product component connection for redundant voltage supply	Yes	Yes
supplied active power of PSE with PoE		
• per port maximum		30 W
• total maximum		120 W
type of voltage 1 of the supply voltage	DC	DC
• supply voltage 1 rated value	24 V	54 V
• power loss [W] 1 rated value	8 W	13 W
• consumed current 1 at rated supply voltage maximum	0.4 A	2.5 A
• supply voltage 1 rated value	19.2 ... 28.8 V	46 ... 57 V
• consumed current 1 maximum	0.335 A	2.5 A
• type of electrical connection 1 for power supply	4-pin M12 plug (A-coded)	4-pin M12 plug (A-coded)
• product component 1 fusing at power supply input	Yes	Yes
• fuse protection type 1 at input for supply voltage	5 A / 60 V	5 A / 60 V
ambient conditions		
ambient temperature		
• during operation	-40 ... +70 °C	-40 ... +70 °C
• during storage	-40 ... +70 °C	-40 ... +70 °C
• during transport	-40 ... +70 °C	-40 ... +70 °C
• note		EEC variants with EN 50155 support for 10 minutes: -40 °C ... +85 °C
relative humidity		
• at 25 °C without condensation during operation maximum	95 %	95 %
protection class IP	IP65	IP65
design, dimensions and weights		
design	compact	compact
width	280 mm	280 mm
height	200 mm	200 mm
depth	49 mm	49 mm
net weight	2.5 kg	2.5 kg
product feature conformal coating		Yes
material of the enclosure	Aluminum	Aluminum
fastening method	ET200pro module carrier	ET200pro module carrier
• wall mounting	Yes	Yes
product features, product functions, product components general		
cascading in the case of a redundant ring at reconfiguration time of <\~0.3\~s	50	50
cascading in cases of star topology	any (depending only on signal propagation time)	any (depending only on signal propagation time)
product functions management, configuration, engineering		
product function		
• CLI	Yes	Yes
• web-based management	Yes	Yes
• MIB support	Yes	Yes
• TRAPs via email	Yes	Yes

© Siemens AG 2024

Technical specifications (continued)

Article number	6GK5216-0HA00-2AS6	6GK5216-0UA00-5ES6
• configuration with STEP 7	Yes	Yes
• RMON	Yes	Yes
• port mirroring	Yes	Yes
• multiport mirroring	Yes	Yes
• CoS	Yes	Yes
• with IRT PROFINET IO switch	No	No
• PROFINET IO diagnosis	Yes	Yes
• switch-managed	Yes	Yes
PROFINET conformity class	B	B
network load class according to PROFINET	2	
telegram length for Ethernet maximum	1 518 byte	1 518 byte
protocol is supported		
• Telnet	Yes	Yes
• HTTP	Yes	Yes
• HTTPS	Yes	Yes
• TFTP	Yes	Yes
• FTP	Yes	Yes
• BOOTP	No	No
• DCP	Yes	Yes
• LLDP	Yes	Yes
• EtherNet/IP	Yes	Yes
• SNMP v1	Yes	Yes
• SNMP v2	Yes	Yes
• SNMP v3	Yes	Yes
• IGMP (snooping/querier)	Yes	Yes
identification & maintenance function		
• I&M0 - device-specific information	Yes	Yes
• I&M1 - higher level designation/location designation	Yes	Yes
product functions diagnostics		
product function		
• port diagnostics	Yes	Yes
• statistics Packet Size	Yes	Yes
• statistics packet type	Yes	Yes
• error statistics	Yes	Yes
• SysLog	Yes	Yes
product functions VLAN		
product function		
• VLAN - port based	Yes	Yes
• VLAN - protocol-based	No	No
• VLAN - IP-based	No	No
• VLAN dynamic	No	No
number of VLANs maximum	257	257
number of VLANs - dynamic maximum	257	257
number of VLANs at ring redundancy (HRP; MRP; standby link)	257	257
product functions DHCP		
product function		
• DHCP server	Yes	Yes
• DHCP client	Yes	Yes
• DHCP Option 82	Yes	Yes
• DHCP Option 66	Yes	Yes

© Siemens AG 2024

Technical specifications (continued)

Article number	6GK5216-0HA00-2AS6	6GK5216-0UA00-5ES6
• DHCP Option 67	Yes	Yes
product functions redundancy		
protocol is supported Media Redundancy Protocol (MRP)	Yes	Yes
product function		
• media redundancy protocol (MRP) with redundancy manager	Yes	Yes
• Media Redundancy Protocol Interconnection (MRP-I)	Yes	Yes
• of the PROFINET IO device is supported H-Sync forwarding	Yes	Yes
• of the PROFINET IO device is supported PROFINET system redundancy	Yes	Yes
• ring redundancy	Yes	Yes
• high speed redundancy protocol (HRP) with redundancy manager	Yes	Yes
• high speed redundancy protocol (HRP) with standby redundancy	Yes	Yes
• redundancy procedure RSTP	Yes	Yes
• redundancy procedure RSTP+	Yes	Yes
• redundancy procedure MSTP	Yes	Yes
• passive listening	Yes	Yes
system modification during operation		
product function configuration in RUN via CiR/H-CiR	Yes	Yes
product functions security		
product function		
• RADIUS client	Yes	Yes
protocol is supported		
• SSH	Yes	Yes
• SSL	Yes	Yes
product functions time		
product function		
• SICLOCK support	Yes	Yes
• NTP-client	Yes	Yes
• SNTP client	Yes	Yes
protocol is supported		
• NTP	Yes	Yes
• SNTP	Yes	Yes
standards, specifications, approvals		
certificate of suitability		
• CE marking	Yes	Yes
• KC approval	Yes	Yes
• Regulatory Compliance Mark (RCM)	Yes	Yes
standard		
• for safety from CSA and UL	UL 60950-1 E115352, CSA C22.2 No. 60950-1	UL 60950-1 E115352, CSA C22.2 No. 60950-1
standards, specifications, approvals hazardous environments		
certificate of suitability		
• ATEX	Yes	Yes
• UKEX	Yes	Yes
• IECEx	Yes	Yes
• CCC for hazardous zone according to GB standard	Yes	Yes
• FM registration	Yes	Yes
standards, specifications, approvals other		
certificate of suitability		
• railway application in accordance with EN 50155	No	Yes

© Siemens AG 2024

Technical specifications (continued)

Article number	6GK5216-0HA00-2AS6	6GK5216-0UA00-5ES6
• railway application in accordance with EN 50124-1	No	Yes
• fire protection in accordance with EN 45545-2		Yes
• RoHS conformity	Yes	Yes
IT security for industrial automation systems according to IEC 62443-4-2:2019	Yes	Yes
standards, specifications, approvals marine classification		
Marine classification association		
• American Bureau of Shipping Europe Ltd. (ABS)	Yes	
• French marine classification society (BV)	Yes	
• DNV GL	Yes	
• Korean Register of Shipping (KRS)	Yes	
• Lloyds Register of Shipping (LRS)	Yes	
• Nippon Kaiji Kyokai (NK)	Yes	
• Polski Rejestr Statkow (PRS)	Yes	
• Royal Institution of Naval Architects (RINA)	Yes	
standards, specifications, approvals Environmental Product Declaration		
Environmental Product Declaration		Yes
Global Warming Potential [CO2 eq]		
• total		417.94 kg
• during manufacturing		61.47 kg
• during operation		356.2 kg
• after end of life		0.27 kg
product functions general		
reference code		
• according to IEC 81346-2	KF	KF
• according to IEC 81346-2:2019	KFE	KFE
Warranty period	5 a	5 a
further information internet links		
internet link		
• to website: Selection guide for cables and connectors	https://support.industry.siemens.com/cs/ww/en/view/109766358	https://support.industry.siemens.com/cs/ww/en/view/109766358
• to web page: selection aid TIA Selection Tool	https://www.siemens.com/tstcloud	https://www.siemens.com/tstcloud
• to website: Industrial communication	https://www.siemens.com/simatic-net	https://www.siemens.com/simatic-net
• to web page: SiePortal	https://sieportal.siemens.com/	https://sieportal.siemens.com/
• to website: Image database	https://www.automation.siemens.com/bilddb	https://www.automation.siemens.com/bilddb
• to website: CAx-Download-Manager	https://www.siemens.com/cax	https://www.siemens.com/cax
• to website: Industry Online Support	https://support.industry.siemens.com	https://support.industry.siemens.com

Article number product type designation	6GK5923-0PS00-2AA6 SCALANCE PSP9230PoE power supply
type of current supply	240 W, input nominal voltage: 100V 240V AC / 110V 250V DC, non-redundant, 50/60 Hz, output: 24V DC (1A) / 54V DC (4A)
suitability for use	IP65 power supply unit for PoE, especially for use with SCALANCE XP-200 devices. SCALANCE XP208 can be mounted directly and SCALANCE XP216 can be mounted on the PSP9230PoE using two adapter plates included in scope of delivery. Intended for operation outside a control cabinet.
electrical data	
product category	Power supply
electrical data input	
voltage curve at input	1-phase AC or DC
supply voltage 1 rated value	230 V

© Siemens AG 2024

Technical specifications (continued)

Article number product type designation	6GK5923-0PS00-2AA6 SCALANCE PSP9230PoE power supply
• supply voltage 1 rated value	85 ... 264 V
• type of voltage 1 of the supply voltage	AC
• consumed current 1 at rated supply voltage maximum	2.67 A
supply voltage 2 rated value	110 V
• supply voltage 2 rated value	88 ... 300 V
• type of voltage 2 of the supply voltage	DC
• consumed current 2 at rated supply voltage maximum	2.5 A
design of input wide range input	Yes
overvoltage category	Category II
buffering time for rated value of the output current in the event of power failure minimum	20 ms
line frequency	
• 50 Hz	Yes
• 60 Hz	Yes
• 1 rated value	50 Hz
• 2 rated value	60 Hz
line frequency	47 ... 63 Hz
input current at rated input voltage 230 V rated value	1.1 A
current limitation of inrush current at 25 °C maximum	60 A
fuse protection type at input	fuse T 4A, electronically controlled
electrical data output	
voltage curve at output	Controlled, isolated DC voltage
output voltage	
• 1 at DC rated value	56 V
• 2 at DC rated value	24 V
display version for normal operation	LED green for DC ok
voltage increase time of the output voltage maximum	800 ms
output current	
• rated value	3 A
• rated range	0 ... 4 A
supplied active power typical	240 W
product feature parallel switching of channels	No
number of parallel-switched equipment resources for increasing the power	0
efficiency in percent	93.4 %
power loss [W]	24 W
electrical data closed-loop control	
relative overall tolerance of the voltage	3 %
residual ripple maximum	0.05 V
switching frequency	100 kHz; 10...200
electrical data protection and monitoring	
property of the output short-circuit proof	Yes
design of short-circuit protection	Electronic shutdown, automatic restart
enduring short circuit current RMS value maximum	8.2 A
electrical data safety	
galvanic isolation between input and output	Yes
galvanic isolation	Input to output: 4 kV, input to PE 2.5 kV, output to PE: 2.25 kV
operating resource protection class	Class I
interfaces	
number of electrical connections	
• for power supply	1

© Siemens AG 2024

Technical specifications (continued)

Article number product type designation	6GK5923-0PS00-2AA6 SCALANCE PSP9230PoE power supply
• for signaling contact	0
type of electrical connection	
• for power supply	M12 (S-coded)
• at output	2x M12 (L-coded)
display version	LED
signal inputs/outputs	
product component signaling contact	No
design, dimensions and weights	
design	compact
width	280 mm
height	200 mm
depth	65 mm
net weight	4.5 kg
product feature of the enclosure housing can be lined up	No
fastening method	wall mounting, back wall mounting
• 19-inch installation	No
• wall mounting	Yes
• screw connection	Yes
ambient conditions	
ambient temperature	
• during operation	-40 ... +70 °C
• during storage	-40 ... +85 °C
• during transport	-40 ... +85 °C
• note	Convection
relative humidity at 25 °C without condensation during operation maximum	95 %
environmental category according to IEC 60721	Climate class 3K3, without condensation
protection class IP	IP65
standards, specifications, approvals	
standard	
• for safety from CSA and UL	UL 62368-1:2014 (Second Edition) Report No. E115352, IEC 62368-1:2014 (Second Edition)
• for emitted interference	EN 61000-6-4:2007 +A1:2011
• for interference immunity	EN 61000-6-2:2019
certificate of suitability	EN 61000-6-4: 2007
• CE marking	Yes
• C-Tick	Yes
• railway application in accordance with EN 50155	Yes
• railway application in accordance with EN 50124-1	Yes
• IEC 61850-3	No
• IEEE 1613	No
MTBF	94.74 a; EN/IEC 61709; 40°C)
accessories	
accessories	power M12 cable connector PRO (6GK1907-0DC00-6AA4)
accessories included	2 adapter plates including 4 countersunk head screws for mounting SCALANCE XP216 on PSP9230PoE
further information internet links	
internet link	
• to website: Selection guide for cables and connectors	https://support.industry.siemens.com/cs/ww/en/view/109766358
• to web page: selection aid TIA Selection Tool	https://www.siemens.com/tstcloud
• to website: Industrial communication	https://www.siemens.com/simatic-net
• to web page: SiePortal	https://sieportal.siemens.com/

© Siemens AG 2024

Technical specifications (continued)

Article number product type designation	6GK5923-0PS00-2AA6 SCALANCE PSP9230PoE power supply
• to website: Image database	https://www.automation.siemens.com/bilddb
• to website: CAx-Download-Manager	https://www.siemens.com/cax
• to website: Industry Online Support	https://support.industry.siemens.com
security information	
security information	Siemens provides products and solutions with industrial cybersecurity functions that support the secure operation of plants, systems, machines and networks. In order to protect plants, systems, machines and networks against cyber threats, it is necessary to implement – and continuously maintain – a holistic, state-of-the-art industrial cybersecurity concept. Siemens' products and solutions constitute one element of such a concept. Customers are responsible for preventing unauthorized access to their plants, systems, machines and networks. Such systems, machines and components should only be connected to an enterprise network or the internet if and to the extent such a connection is necessary and only when appropriate security measures (e.g. firewalls and/or network segmentation) are in place. For additional information on industrial cybersecurity measures that may be implemented, please visit www.siemens.com/cybersecurity-industry. Siemens' products and solutions undergo continuous development to make them more secure. Siemens strongly recommends that product updates are applied as soon as they are available and that the latest product versions are used. Use of product versions that are no longer supported, and failure to apply the latest updates may increase customer's exposure to cyber threats. To stay informed about product updates, subscribe to the Siemens Industrial Cybersecurity RSS Feed under https://www.siemens.com/cert. (V4.7)

More information

Selection Tool:

To support the selection of SCALANCE network components, the TIA Selection Tool is available at:

www.siemens.com/tst

Ordering overview:

You can find more information on the FastConnect range in the "Cabling technology for communication networks in industry" ordering overview.

© Siemens AG 2024

Overview

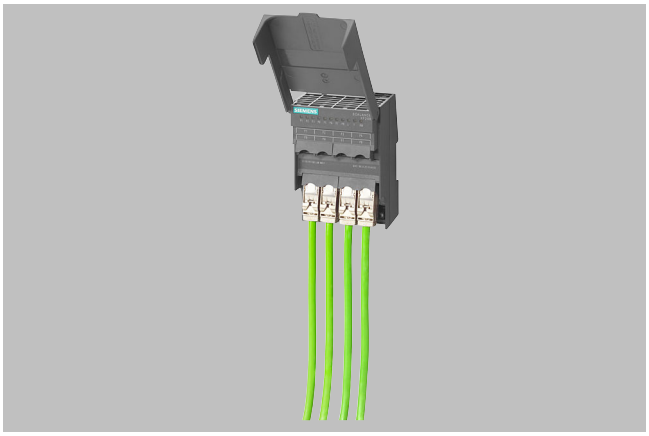

The managed Industrial Ethernet switches of the SCALANCE XF-200 line are optimized for setting up Industrial Ethernet networks at data transfer rates of 10/100 Mbps in a line, star and ring topology. In addition, transfer rates of 1000 Mbps are supported by the compact XF204G.

- Integrated redundancy manager for constructing Fast Ethernet and Gigabit (XF204G) ring topologies with high-speed media redundancy
- Electrical or optical connection to stations or networks according to port characteristics of the devices
- Enclosure, for example, in SIMATIC ET 200S format (slim design) for use in small control boxes
- Rugged station connections with industry-standard RJ45 plug-in connectors that offer additional strain and bending strain relief thanks to latching on the enclosure
- PROFINET diagnostics, SNMP access, integrated web server and automatic email transmission function for remote diagnostics and signaling via the network
- Integration into the SINEC NMS network management system for end-to-end network diagnostics with central firmware management

Product variants

- Switches with electrical and optical ports
  up to 5 km:
  - SCALANCE XF204-2
    4 x 10/100 Mbps RJ45 port, electrical
    2 x 100 Mbps ST/BFOC port, optical
  - SCALANCE XF206-1
    6 x 10/100 Mbps RJ45 port, electrical
    1 x 100 Mbps ST/BFOC port, optical
- Switches with electrical ports:
  - SCALANCE XF204G;
    4 x 10/100/1000 Mbps RJ45 port, electrical
    SCALANCE XF204;
    4 x 10/100 Mbps RJ45 port, electrical
  - SCALANCE XF208;
    8 x 10/100 Mbps RJ45 port, electrical

Benefits

get Designed for Industry

- Saves space in the control cabinet and use of smaller control boxes possible due to slim design in the format of the SIMATIC ET 200S distributed I/O and, in the case of SCALANCE XF204G, due to very compact design.
- Simple connection and disconnection of the RJ45 plug by means of easily accessible RJ45 sockets angled downward on the device (SCALANCE XF-200)
- Simple connection and disconnection of RJ45 plugs when used in an operator station thanks to RJ45 sockets located on the front (SCALANCE XF204G)
- High availability of the network thanks to:
  - Redundant power supply
  - Redundant network structures based on fiber-optic or twisted pair cables (redundancy manager is integrated)
  - Easy device replacement by means of C-PLUG removable data storage medium
- Lower susceptibility to failure and higher availability of the plant networking due to latching of the RJ45 FastConnect connectors in the securing collar of the RJ45 ports
- Protection of investment through integration into existing network management systems (e.g. SINEC NMS), by means of standardized SNMP access
- Time savings during engineering, commissioning and in the operating phase of a plant by using the configuration and diagnostics integrated in STEP 7/TIA Portal
- Integration into the SINEC NMS network management system for integrated network diagnostics with central firmware management

Application

SCALANCE XF-200 Industrial Ethernet switches enable cost-effective configuration of Industrial Ethernet line, star or ring topologies with switching functionality for networks in which high availability or remote diagnostic capabilities are required. Devices with IP20 degree of protection are designed for use in the control cabinet.

Features:

- Device diagnostics with LEDs (power, link status, data communication)
- Remote diagnostics by means of signaling contact, PROFINET, SNMP or SINEC NMS and web browser possible
- The RJ45 sockets are designed to be industry-compatible with additional securing collars for connection of the IE FC RJ45 plug 180

© Siemens AG 2024

Design

The SCALANCE XF-200 managed Industrial Ethernet switches are designed for mounting on a DIN rail. With their enclosure in SIMATIC ET 200S format (slim design), the devices are optimally suited for integration in automation solutions in small control boxes together with the SIMATIC ET 200S.

The switches with IP20 degree of protection feature:

- A 4-pin terminal block for connecting the redundant supply voltage (2 x 24 V DC)
- A row of LEDs to indicate the status information (power, link status, data traffic, power supply, signaling contact)
- A 2-pin terminal block for connecting the floating signaling contact (Fast Ethernet devices)
- A SET button for on-site configuration of the signaling contact

The SCALANCE XF-200 switches are available with the following port types:

- 100/1000BaseTX, RJ45 connection;

  RJ45 socket, automatic detection of data transfer rate (100 or 1000 Mbps), with autosensing and autocrossover functions for connecting IE FC cables using the IE FC RJ45 plug 180.
- 10/100BaseTX, RJ45 connection;

  RJ45 socket, automatic detection of data transfer rate (10 or 100 Mbps), with autosensing and autocrossover functions for connecting IE FC cables using the IE FC RJ45 plug 180.
- 100BaseFX, ST/BFOC connection technology;

  ST/BFOC sockets for direct connection to Industrial Ethernet glass fiber-optic cables up to 5 km (multimode FOC) for configuring line, ring and star topologies.

Function

- Setup of electrical and optical Industrial Ethernet line, star and ring topologies
- Fast redundancy in the ring with High Speed Redundancy (HRP) protocol; up to 0.3 seconds required for reconfiguration of the ring with 50 switches in the ring
- Fast redundancy in the ring with PROFINET-compatible Media Redundancy Protocol (MRP); max. 0.2 seconds required for reconfiguration of the ring with 50 switches in the ring
- Coupling of several MRP rings through support of MRP interconnect (SCALANCE XF204G)
- The functioning of the ring is continuously monitored by the integrated redundancy manager. It recognizes failure of a transmission link in the ring, or failure of a SCALANCE XF-200, and activates the substitute path within 0.3 or 0.2 seconds
- Use in ring topologies (100 Mbps) together with SCALANCE XR-500, XM-400, X-300 and X-200
- Uncrossed connecting cables can be used due to autocrossover function integrated in the ports
- Load disconnection through integral switch functionality
- Easy diagnostics using signaling contact, SNMP and web browser
- Easy copper cable diagnostics via web browser for localizing cable breaks
- Incorporation in the integrated system diagnostics of the TIA Portal with PROFINET diagnostics for a consistent diagnostics concept, including network infrastructure
- Diagnostics of data traffic by means of a parameterizable mirror port with a standard commercially available network analyzer (e.g. via Bus Analyzer Agent XM-400)
- Fast device replacement in the event of a fault by using the optional C-PLUG removable data storage medium (not included in scope of supply)

Network topology and network configuration

The SCALANCE XF-200 Industrial Ethernet switches with IP20 degree of protection are usually installed in a control cabinet together with the stations to be connected. Electrical and optical versions can be installed together in star, line and ring topologies.

When configuring the network, the following boundary conditions must be observed:

- Length of the twisted pair cable between two SCALANCE XF-200 switches
  - Max. 100 m with IE FC cable and IE FC RJ45 plug 180
  - Max. 10 m using patches with TP cord
- Length of the optical cables
  - Max. 5000 m with Industrial Ethernet glass fiber-optic cables (multimode)
- IP address:

  The IP address is assigned by means of the DHCP (Dynamic Host Configuration Protocol). If there is no corresponding server in the network, the IP address can be assigned using the supplied software tool PST (Primary Setup Tool) or STEP 7/TIA Portal. The SCALANCE XF-200 switches are configured with STEP 7/TIA Portal.

Commissioning and diagnostics

PROFINET diagnostic interrupts from SCALANCE XF-200 switches can be displayed with the appropriate SIMATIC engineering tools and processed in the PLC with an expanded diagnostics function. The

© Siemens AG 2024

Function (continued)

engineering outlay for the PLC and HMI has been drastically reduced due to the complete integration in the SIMATIC concept for system error messages.

SCALANCE XF-200 Industrial Ethernet switches can also be integrated in a network management system (e.g. SINEC NMS) using the standardized Simple Network Management Protocol (SNMP). In the event of faults in the device, error messages (SNMP traps) can be sent to a network management system (e.g. SINEC NMS) or as an email to a specified network administrator.

The integrated web server enables configuration and diagnostics settings to be made using a standard web browser (e.g. port configuration). Statistical information can also be read out over the web server (e.g. port capacity utilization).

The following information is displayed on site by LEDs:

- Power
- Port status
- Data traffic
- Signaling contact
- Redundancy manager function

The Industrial Ethernet switches of the SCALANCE XF-200 line can also be monitored using the floating signaling contact.

Selection and ordering data

	Article No.
SCALANCE XF-200 Industrial Ethernet switches Industrial Ethernet switches with integral SNMP access, web diagnostics, copper cable diagnostics, and PROFINET diagnostics for configuring line, star and ring topologies; with integrated redundancy manager; incl. operating instructions	
• **SCALANCE XF204G** 4 x 10/100/1000 Mbps RJ45 ports electrical; *Mounting accessories:* - DIN rail mounting plate - Operator station mounting plate	**6GK5204-0GA00-1UF2** **6GK5980-2HA00-0AA1** **6GK5980-2HA10-0AA1**
• **SCALANCE XF204-2** 4 x 10/100 Mbps RJ45 ports, electrical; 2 x 100 Mbps BFOC ports, optical (multimode, glass), up to 5 km	**6GK5204-2BC00-2AF2**
• **SCALANCE XF206-1** 6 x 10/100 Mbps RJ45 ports, electrical; 1 x 100 Mbps BFOC ports, optical (multimode, glass), up to 5 km	**6GK5206-1BC00-2AF2**
• **SCALANCE XF204** 4 x 10/100 Mbps RJ45 ports, electrical	**6GK5204-0BA00-2AF2**
• **SCALANCE XF208** 8 x 10/100 Mbps RJ45 ports, electrical	**6GK5208-0BA00-2AF2**

Accessories

	Article No.
SIMATIC ET 200SP PS 24 V/5 A Stabilized power supply Input: 120/230 V AC Output: 24 V DC/5 A	**6EP7133-6AB00-0BN0**
IE FC RJ45 plug 180 2 x 2 RJ45 connector for Industrial Ethernet with rugged metal enclosure and integrated insulation displacement contacts for connecting Industrial Ethernet FC installation cables; with 180° cable outlet; for network components and CPs/CPUs with Industrial Ethernet interface • 1 pack = 1 unit	**6GK1901-1BB10-2AA0**
IE FC TP standard cable GP 2 x 2 (type A) 4-core, shielded TP installation cable for connection to IE FC RJ45 outlet/IE FC RJ45 plug; PROFINET-compatible; with UL approval; sold by the meter; max. delivery unit 1000 m, minimum order quantity 20 m, also available as preassembled cable with RJ45 plugs in various lengths	**6XV1840-2AH10**
FO standard cable GP 50/125/1400 Multimode cable, sold by the meter; max. delivery unit 1000 m, minimum order quantity 20 m, also available preassembled with ST/BFOC and SC connectors in various lengths	**6XV1873-2A**
SCALANCE TAP104 Test access port for the reaction-free extraction of Ethernet data frames (10/100 Mbps) from both transmission directions; extracts complete data traffic, including faulty frames, for further diagnostics.	**6GK5104-0BA00-1SA2**

© Siemens AG 2024

Technical specifications

Article number	6GK5204-0BA00-2A-F2	6GK5204-2BC00-2A-F2	6GK5206-1BC00-2A-F2	6GK5208-0BA00-2A-F2	6GK5204-0GA00-1U-F2
product type designation					
product brand name	SCALANCE	SCALANCE	SCALANCE	SCALANCE	SCALANCE
product type designation	XF204	XF204-2	XF206-1	XF208	
transfer rate					
transfer rate	10 Mbit/s, 100 Mbit/s	10 Mbit/s, 100 Mbit/s	10 Mbit/s, 100 Mbit/s	10 Mbit/s, 100 Mbit/s	10 Mbit/s, 100 Mbit/s, 1 000 Mbit/s
interfaces for communication integrated					
number of electrical connections					
• for network components or terminal equipment	4	4	6	8	4; RJ45
number of 10/100 Mbit/s RJ45 ports					
• with securing collar		4			
number of 10/100/1000 Mbit/s RJ45 ports					
• with securing collar					4
number of 100 Mbit/s ST(BFOC) ports					
• for multimode		2	1		
transmission method of the optical interface		100BaseFX	100BaseFX		
interfaces other					
number of electrical connections					
• for operator console					1
• for signaling contact	1	1	1	1	0
• for power supply	1	1	1	1	1
type of electrical connection					
• for operator console					RJ11
• for signaling contact	2-pole terminal block	2-pole terminal block	2-pole terminal block	2-pole terminal block	
• for power supply	4-pole terminal block	4-pole terminal block	4-pole terminal block	4-pole terminal block	2-pole terminal block
design of the removable storage					
• C-PLUG	Yes	Yes	Yes	Yes	Yes
operating voltage of the signaling contacts					
• at DC rated value	24 V	24 V	24 V	24 V	
operational current of the signaling contacts					
• at DC maximum	0.1 A	0.1 A	0.1 A	0.1 A	
supply voltage, current consumption, power loss					
product component connection for redundant voltage supply	Yes	Yes	Yes		
type of voltage 1 of the supply voltage	DC	DC	DC	DC	DC
• supply voltage 1 rated value	24 V	24 V	24 V	24 V	24 V
• power loss [W] 1 rated value	2.64 W	5.28 W	4.08 W	3.12 W	4.3 W
• supply voltage 1 rated value	18 ... 32 V	18 ... 32 V	18 ... 32 V	18 ... 32 V	16.8 ... 31.2 V
• consumed current 1 maximum	0.11 A	0.22 A	0.17 A	0.13 A	0.2 A
• type of electrical connection 1 for power supply	4-pole terminal block	4-pole terminal block	4-pole terminal block	4-pole terminal block	2-pole terminal block
• product component 1 fusing at power supply input	Yes	Yes	Yes	Yes	Yes
• fuse protection type 1 at input for supply voltage	1.1 A / 33 V	1.1 A / 33 V	1.1 A / 33 V	1.1 A / 33 V	1,5 A / 125V

© Siemens AG 2024

Technical specifications (continued)

Article number	6GK5204-0BA00-2A-F2	6GK5204-2BC00-2A-F2	6GK5206-1BC00-2A-F2	6GK5208-0BA00-2A-F2	6GK5204-0GA00-1U-F2
ambient conditions					
ambient temperature					
• during operation	-40 ... +60 °C	-40 ... +60 °C	-40 ... +60 °C	-40 ... +60 °C	0 ... 60 °C
• during storage	-40 ... +70 °C	-40 ... +70 °C	-40 ... +70 °C	-40 ... +70 °C	-40 ... +85 °C
• during transport	-40 ... +70 °C	-40 ... +70 °C	-40 ... +70 °C	-40 ... +70 °C	-40 ... +85 °C
• note	If the IE-Switch XF-200 is installed horizontally, a maximum ambient temperature of +40 °C is permitted	If the IE-Switch XF-200 is installed horizontally, a maximum ambient temperature of +40 °C is permitted	If the IE-Switch XF-200 is installed horizontally, a maximum ambient temperature of +40 °C is permitted	If the IE-Switch XF-200 is installed horizontally, a maximum ambient temperature of +40 °C is permitted	
relative humidity					
• at 25 °C without condensation during operation maximum	95 %	95 %	95 %	95 %	95 %
protection class IP	IP20	IP20	IP20	IP20	IP20
design, dimensions and weights					
design	Flat	Flat	Flat	Flat	compact
width	75 mm	75 mm	75 mm	75 mm	66 mm
height	125 mm	125 mm	125 mm	125 mm	100 mm
depth	73 mm	73 mm	73 mm	73 mm	69 mm
net weight	0.25 kg	0.25 kg	0.25 kg	0.25 kg	0.17 kg
material of the enclosure					Polycarbonate (PC-GF10)
fastening method					
• 35 mm top hat DIN rail mounting	Yes	Yes	Yes	Yes	Yes
• wall mounting	No	No	No	No	No
• S7-300 rail mounting	No	No	No	No	No
• S7-1500 rail mounting	No	No	No	No	No
product features, product functions, product components general					
cascading in the case of a redundant ring at reconfiguration time of <\~0.3\~s	50	100	100	100	50
cascading in cases of star topology	any (depending only on signal propagation time)	any (depending only on signal propagation time)	any (depending only on signal propagation time)	any (depending only on signal propagation time)	any (depending only on signal propagation time)
product function					
• QoS according to DSCP					Yes
product feature					
• Cut Through switching method					No
• Store & Forward switching method					Yes
product functions management, configuration, engineering					
product function					
• CLI	Yes	Yes	Yes	Yes	Yes
• web-based management	Yes	Yes	Yes	Yes	Yes
• MIB support	Yes	Yes	Yes	Yes	Yes
• TRAPs via email	Yes	Yes	Yes	Yes	Yes
• configuration with STEP 7	Yes	Yes	Yes	Yes	Yes
• RMON					Yes
• SMTP server					No
• port mirroring	Yes	Yes	Yes	Yes	Yes
• multiport mirroring	No	No	No	No	Yes
• CoS					Yes

© Siemens AG 2024

Technical specifications (continued)

Article number	6GK5204-0BA00-2A-F2	6GK5204-2BC00-2A-F2	6GK5206-1BC00-2A-F2	6GK5208-0BA00-2A-F2	6GK5204-0GA00-1U-F2
• with IRT PROFINET IO switch	No	No	No	No	
• PROFINET IO diagnosis	Yes	Yes	Yes	Yes	Yes
• switch-managed	Yes	Yes	Yes	Yes	Yes
PROFINET conformity class	B	B	B	B	B
network load class according to PROFINET					3
telegram length for Ethernet maximum					10 240 byte
protocol is supported					
• Telnet	Yes	Yes	Yes	Yes	Yes
• HTTP	Yes	Yes	Yes	Yes	Yes
• HTTPS	Yes	Yes	Yes	Yes	Yes
• TFTP	Yes	Yes	Yes	Yes	Yes
• FTP	Yes	Yes	Yes	Yes	
• BOOTP	No	No	No	No	No
• GMRP					Yes
• DCP	Yes	Yes	Yes	Yes	Yes
• LLDP	Yes	Yes	Yes	Yes	Yes
• EtherNet/IP					Yes
• SNMP v1	Yes	Yes	Yes	Yes	Yes
• SNMP v2	Yes	Yes	Yes	Yes	Yes
• SNMP v3	Yes	Yes	Yes	Yes	Yes
• IGMP (snooping/querier)					Yes
identification & maintenance function					
• I&M0 - device-specific information	Yes	Yes	Yes	Yes	Yes
• I&M1 - higher level designation/location designation	Yes	Yes	Yes	Yes	Yes
product functions diagnostics					
product function					
• port diagnostics	Yes	Yes	Yes	Yes	Yes
• statistics Packet Size	Yes	Yes	Yes	Yes	Yes
• statistics packet type	Yes	Yes	Yes	Yes	Yes
• error statistics	Yes	Yes	Yes	Yes	Yes
• SysLog					Yes
product functions VLAN					
product function					
• VLAN - port based					Yes
• VLAN - protocol-based					No
• VLAN - IP-based					No
number of VLANs maximum					257
number of VLANs - dynamic maximum					257
number of VLANs at ring redundancy (HRP; MRP; standby link)					257
product functions DHCP					
product function					
• DHCP server					Yes
• DHCP client	Yes	Yes	Yes	Yes	Yes
• DHCP Option 82					Yes
• DHCP Option 66					Yes

© Siemens AG 2024

Technical specifications (continued)

Article number	6GK5204-0BA00-2A-F2	6GK5204-2BC00-2A-F2	6GK5206-1BC00-2A-F2	6GK5208-0BA00-2A-F2	6GK5204-0GA00-1U-F2
• DHCP Option 67					Yes
product functions redundancy					
protocol is supported Media Redundancy Protocol (MRP)	Yes	Yes	Yes	Yes	Yes
product function					
• media redundancy protocol (MRP) with redundancy manager	Yes	Yes	Yes	Yes	Yes
• Media Redundancy Protocol Interconnection (MRP-I)					Yes
• of the PROFINET IO device is supported H-Sync forwarding					Yes
• of the PROFINET IO device is supported PROFINET system redundancy					Yes
• ring redundancy	Yes	Yes	Yes	Yes	Yes
• high speed redundancy protocol (HRP) with redundancy manager	Yes	Yes	Yes	Yes	Yes
• high speed redundancy protocol (HRP) with standby redundancy	No	No	No	No	Yes
• redundancy procedure STP					Yes
• redundancy procedure RSTP					Yes
• redundancy procedure RSTP+					Yes
• redundancy procedure MSTP					Yes
• Parallel Redundancy Protocol (PRP)/operation in the PRP-network	Yes	Yes	Yes	Yes	Yes
• Parallel Redundancy Protocol (PRP)/Redundant Network Access (RNA)	No	No	No	No	No
• passive listening	Yes	Yes	Yes	Yes	Yes
protocol is supported					
• LACP					Yes
system modification during operation					
product function configuration in RUN via CiR/H-CiR					Yes
product functions security					
product function					
• IEEE 802.1x (radius)					Yes
• broadcast/multicast/unicast limiter					Yes
• broadcast blocking					Yes
protocol is supported					
• SSH	Yes	Yes	Yes	Yes	Yes
• SSL					Yes
product functions time					
product function					
• SICLOCK support	Yes	Yes	Yes	Yes	Yes
• NTP-client					Yes
• SNTP client					Yes
protocol is supported					
• NTP	No	No	No	No	Yes
• SNTP	Yes	Yes	Yes	Yes	Yes
• IEEE 1588 profile default					Yes

© Siemens AG 2024

Technical specifications (continued)

Article number	6GK5204-0BA00-2A-F2	6GK5204-2BC00-2A-F2	6GK5206-1BC00-2A-F2	6GK5208-0BA00-2A-F2	6GK5204-0GA00-1U-F2
standards, specifications, approvals					
certificate of suitability					
• CE marking	Yes	Yes	Yes	Yes	Yes
• KC approval	Yes	Yes	Yes	Yes	
• Regulatory Compliance Mark (RCM)	Yes	Yes	Yes	Yes	Yes
product conformity according to EMC-guideline					2014/30/EU
standard					
• for EMC interference emission					EN 61000-6-4, EN 50121-9
• for immunity to EMC					EN 61000-6-2, EN 50121-4
• for safety from CSA and UL	UL 60950-1 E115352, CSA C22.2 No. 60950-1	UL 60950-1 E115352, CSA C22.2 No. 60950-1	UL 60950-1 E115352, CSA C22.2 No. 60950-1	UL 60950-1 E115352, CSA C22.2 No. 60950-1	UL 62368-1 E115352, UL 62368-1 -2 E240480
standards, specifications, approvals hazardous environments					
certificate of suitability					
• ATEX	Yes	Yes	Yes	Yes	Yes
• UKEX	Yes	Yes	Yes	Yes	
• IECEx	Yes	Yes	Yes	Yes	Yes
• ULhazloc approval	Yes	Yes	Yes	Yes	
• CCC for hazardous zone according to GB standard	Yes	Yes	Yes	Yes	Yes
• FM registration	Yes	Yes	Yes	Yes	Yes
standards, specifications, approvals other					
certificate of suitability					
• railway application in accordance with EN 50155	No	No	No	No	
• railway application in accordance with EN 50124-1	No	No	No	No	
• RoHS conformity	Yes	Yes	Yes	Yes	
IT security for industrial automation systems according to IEC 62443-4-2:2019					Yes
standards, specifications, approvals marine classification					
Marine classification association					
• American Bureau of Shipping Europe Ltd. (ABS)	Yes	Yes	Yes	Yes	
• French marine classification society (BV)	Yes	Yes	Yes	Yes	
• DNV GL	Yes	Yes	Yes	Yes	
• Lloyds Register of Shipping (LRS)	Yes	Yes	Yes	Yes	
• Nippon Kaiji Kyokai (NK)	Yes	Yes	Yes	Yes	
• Polski Rejestr Statkow (PRS)	No	Yes	Yes	Yes	
• Royal Institution of Naval Architects (RINA)	Yes	Yes	Yes	Yes	
standards, specifications, approvals Environmental Product Declaration					
Environmental Product Declaration	Yes	Yes	Yes	Yes	
Global Warming Potential [CO2 eq]					

© Siemens AG 2024

Technical specifications (continued)

Article number	6GK5204-0BA00-2A-F2	6GK5204-2BC00-2A-F2	6GK5206-1BC00-2A-F2	6GK5208-0BA00-2A-F2	6GK5204-0GA00-1U-F2
• total	100.09 kg	183.07 kg	144.77 kg	115.41 kg	
• during manufacturing	16.65 kg	16.65 kg	16.65 kg	16.65 kg	
• during operation	82.99 kg	165.97 kg	127.67 kg	98.31 kg	
• after end of life	0.45 kg	0.45 kg	0.45 kg	0.45 kg	
product functions general					
MTBF	48.03 a	43.58 a	43.52 a	54.8 a	73 a
reference code					
• according to IEC 81346-2	KF	KF	KF	KF	KF
• according to IEC 81346-2:2019	KFE	KFE	KFE	KFE	KFE
Warranty period	5 a	5 a	5 a	5 a	5 a
product function is supported identification link	Yes; according to IEC 61406-1:2022	Yes; according to IEC 61406-1:2022	Yes; according to IEC 61406-1:2022		
further information internet links					
internet link					
• to website: Selection guide for cables and connectors	https://support.industry.siemens.com/cs/ww/en/view/109766358	https://support.industry.siemens.com/cs/ww/en/view/109766358	https://support.industry.siemens.com/cs/ww/en/view/109766358	https://support.industry.siemens.com/cs/ww/en/view/109766358	https://support.industry.siemens.com/cs/ww/en/view/109766358
• to web page: selection aid TIA Selection Tool	https://www.siemens.com/tstcloud	https://www.siemens.com/tstcloud	https://www.siemens.com/tstcloud	https://www.siemens.com/tstcloud	https://www.siemens.com/tstcloud
• to website: Industrial communication	https://www.siemens.com/simatic-net	https://www.siemens.com/simatic-net	https://www.siemens.com/simatic-net	https://www.siemens.com/simatic-net	https://www.siemens.com/simatic-net
• to web page: SiePortal	https://sieportal.siemens.com/	https://sieportal.siemens.com/	https://sieportal.siemens.com/	https://sieportal.siemens.com/	https://sieportal.siemens.com/
• to website: Image database	https://www.automation.siemens.com/bilddb	https://www.automation.siemens.com/bilddb	https://www.automation.siemens.com/bilddb	https://www.automation.siemens.com/bilddb	https://www.automation.siemens.com/bilddb
• to website: CAx-Download-Manager	https://www.siemens.com/cax	https://www.siemens.com/cax	https://www.siemens.com/cax	https://www.siemens.com/cax	https://www.siemens.com/cax
• to website: Industry Online Support	https://support.industry.siemens.com	https://support.industry.siemens.com	https://support.industry.siemens.com	https://support.industry.siemens.com	https://support.industry.siemens.com

More information

Selection Tool:

To support the selection of SCALANCE network components, the TIA Selection Tool is available at:

www.siemens.com/tst

Ordering overview:

You can find more information on the FastConnect range in the "Cabling technology for communication networks in industry" ordering overview.

© Siemens AG 2024

Overview

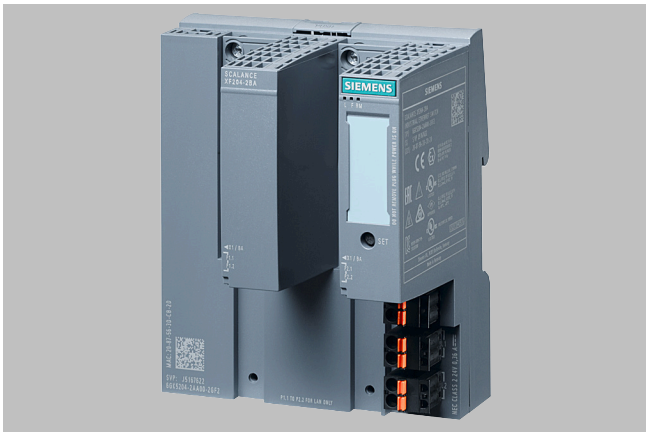

The SCALANCE XF204-2BA from Siemens is a new compact switch in SIMATIC ET 200SP design for factory automation and process automation. It fulfills the recommendations of NAMUR NE 21, and is therefore suitable for use in process automation. The flexible use of various BusAdapters allows support of electrical as well as optical line, star and ring topologies.

- XF-200BA versions are optimized for use in process automation and feature the following properties:
  - Conformal coating PCBs
  - Max. installation altitude 4000 m
  - Extended temperature range from -40 °C to +70 °C
  - NAMUR NE 21-compliant
  - Firmware support for S2 device and CiR/H-CiR
  - Release and integration capability in SIMATIC PCS 7 and PCS neo
- Connection of up to two modular BusAdapters (2 ports each) supported
- Enclosure in SIMATIC ET 200SP design (slim design, 100 mm wide) for space-saving use in small control boxes
- Integrated redundancy manager for configuring Fast Ethernet ring topologies with fast MRP media redundancy
- End-to-end system diagnostics with PROFINET, SNMP access, integrated web server or SINEC NMS and automatic email transmission function for remote diagnostics and signaling via the network
- H-Sync for implementation of system redundancy together with a SIMATIC S7-1500R

The following BusAdapters are currently released for use with SCALANCE XF204-2BA (others available soon):

- SIMATIC ET 200SP HA, BusAdapter BA 2×RJ45, 2 RJ45 sockets
- SIMATIC ET 200SP HA, BusAdapter BA 2×FC, 2 FastConnect connections
- SIMATIC ET 200SP, BusAdapter BA 2×SCRJ, 2 SCRJ FO connections
- SIMATIC BA 2xRJ45VD HA, 2 RJ45 sockets with VD technology (variable distance)
- SIMATIC ET 200SP, BusAdapter BA 2XRJ45, 2x RJ45 sockets
- SIMATIC ET 200SP, BusAdapter BA 2xFC, 2x FastConnect connections

Overview (continued)

- SIMATIC ET 200SP, BusAdapter BA SCRJ/RJ45, 1x SCRJ FO connection and 1x RJ45 connection
- SIMATIC ET 200SP, BusAdapter BA SCRJ/FC, 1x SCRJ FO connection and 1x FastConnect (FC) connection
- SIMATIC ET 200SP, BusAdapter BA 2xLC (as of function status 05), 2x LC FO connection, (as of function status 05)
- SIMATIC ET 200SP, BusAdapter BA LC/RJ45, 1x RJ45, 1x LC FO connection, (as of function status 05)
- SIMATIC ET 200SP, BusAdapter BA LC/FC, 1x RJ45 FastConnect, 1x LC FO connection, (as of function status 05)
- ET 200SP HA, BusAdapter, BA 2XLC, 2x LC FO connection, (as of function status 05)

Product variant

SCALANCE XF204-2BA

- The flexible use of various BusAdapters allows users to set up electrical and optical line, star and ring topologies with the SCALANCE XF204-2BA.

Benefits

get Designed for Industry

- Setup of networks in SIMATIC PCS 7/neo systems with extended environmental conditions (conformal coating)
- Small frame size (SIMATIC ET 200SP design and BusAdapter concept)
- Simple, flexible integration into automation solutions through large selection of different BusAdapters
- Modular design with BusAdapters allows efficient spare part storage by using the same BusAdapter in multiple devices
- Approvals for ATEX Zone 2/IECEx, cULus HazLoc, FM, thus use in Zone 2 hazardous areas possible
- Conforms to NAMUR NE 21, integration in all conventional process control systems, such as SIMATIC PCS 7 and PCS neo
- Time savings during engineering, commissioning and in the operating phase of a plant by using the configuration and diagnostics integrated in STEP 7/TIA Portal
- Integration into the SINEC NMS network management system for end-to-end network diagnostics with central firmware management
- H-Sync for implementation of system redundancy together with a SIMATIC S7-1500R
- The SIMATIC BA 2xRJ45VD HA permits PROFINET communication up to 500 m
- Integration of switches in systems with simple S2 system redundancy and Configuration in Run (CiR/HCiR)
- Since Configuration in Run (CiR/H-CiR) is supported, PROFINET-defined configuration changes to the switch are performed during operation
- Easy integration in the process and system diagnostics with PROFINET via SIMATIC PCS 7 and PCS neo

© Siemens AG 2024

Application

- Construction of networks in both factory and process automation
- Conformal coating PCBs
- Installation altitudes up to 4 000 m possible
- Extended temperature range from -40 °C to +70 °C
- NAMUR NE 21-compliant
- Firmware support of: S2 device and CiR/H-CiR. The devices are released for SIMATIC PCS 7 and PCS neo and are integration-capable
- Device diagnostics with LED (voltage/errors/redundancy)
- Remote diagnostics is possible through signaling contact (signal mask can be set locally using buttons), PROFINET, SNMP or SINEC NMS and web browser
- H-Sync for implementation of system redundancy together with a SIMATIC S7-1500R
- Automatic email send function
- Interfaces for mounting BusAdapters from the SIMATIC ET 200SP HA product range

Design

The SCALANCE XF204-2BA managed Industrial Ethernet switch is designed for mounting on a standard DIN rail. With its enclosure in SIMATIC ET 200SP format (slim design), the device is optimally suited for integration in automation solutions in small control boxes together with the SIMATIC ET 200SP.

The SCALANCE XF204-2BA switch with its rugged plastic enclosure and IP20 degree of protection is optimized for mounting on standard DIN rails. Thanks to the dimensions of the SIMATIC ET 200SP enclosure, the devices are ideally suited for integration into an automation solution with SIMATIC ET 200SP components.

The SCALANCE XF204-2BA switch is available with the following port types/interfaces:

- Variant with 2 BusAdapter interfaces
- Variant with two premounted BusAdapters BA 2xRJ45 HA

© Siemens AG 2024

Function

- Setup of electrical and optical Industrial Ethernet line, star and ring topologies

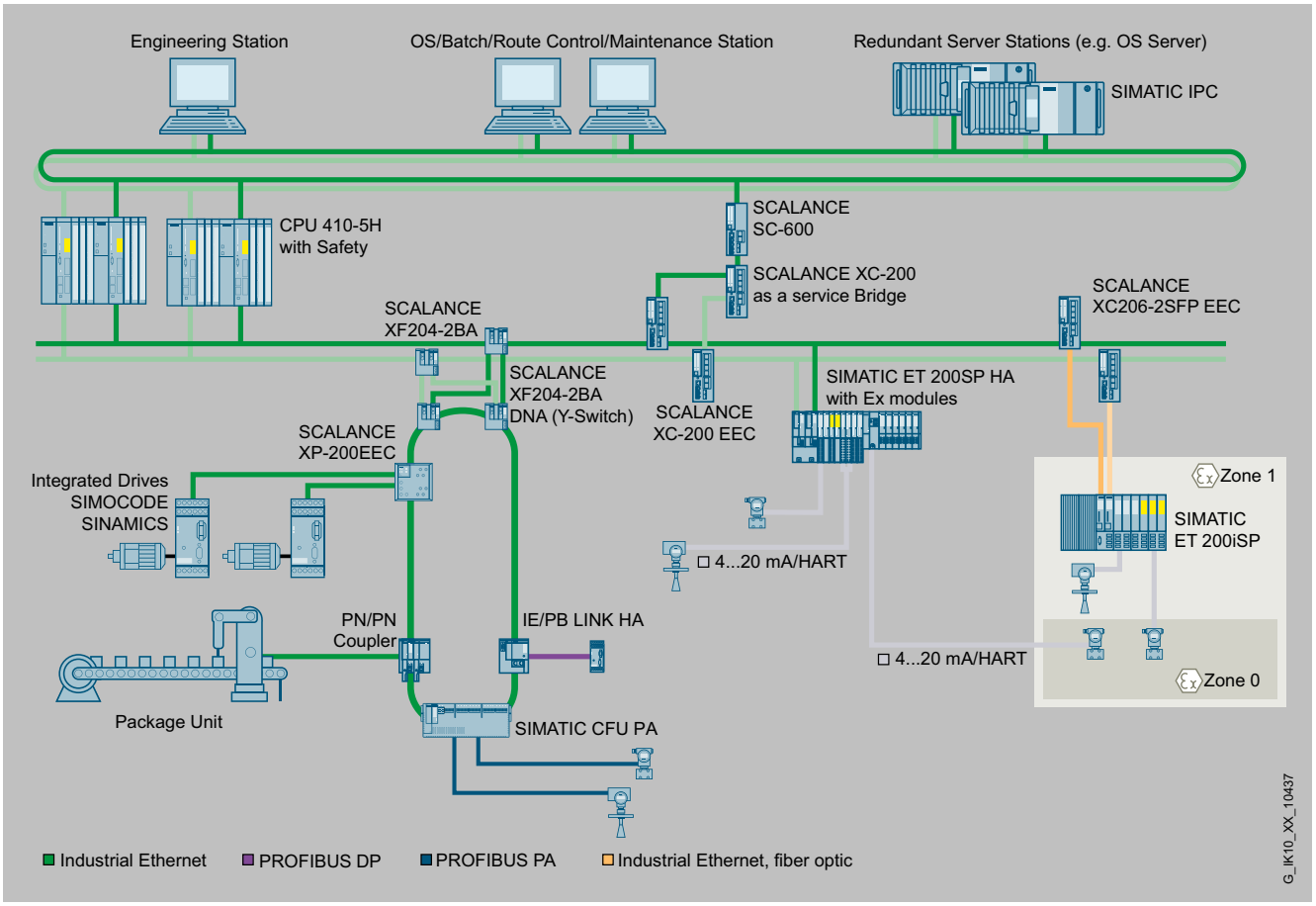

Redundant PROFINET networks in the process industry with SCALANCE X switches

- Integral redundancy manager for design of ring topologies
- Integral standby function for redundant coupling of two rings
- Load disconnection through integral switch functionality
- Easy diagnostics using signaling contact, SNMP and web browser
- Integration in a network management system (e.g. SINEC NMS)
- Automatic email function
- Fast device replacement in the event of a fault by using the optional C-PLUG removable data storage medium (not included in scope of supply)

Network topology and network configuration

Installation of a ring topology with the SCALANCE XF204-2BA.

The SCALANCE XF204-2BA Industrial Ethernet switch with degree of protection IP20 is installed in a control cabinet together with the nodes to be connected. Electrical and optical versions can be installed together in star, line and ring topologies.

When configuring the network, the following boundary conditions must be observed:

- Length of the twisted pair cable between two SCALANCE XF-200BA switches:

  Max. 100 m with IE FC cable and IE FC RJ45 plug 180 with BusAdapter BA RJ45. By means of the BA 2xRJ45VD HA, it is also possible to achieve electrical cabling lengths of up to 1000 m.

- IP address:

  The IP address is assigned by means of the DHCP (Dynamic Host Configuration Protocol). If there is no corresponding server in the network, the IP address can be assigned using the supplied software tool PST (Primary Setup Tool) or STEP 7/TIA Portal.

  SCALANCE XF204-2BA device configuration is with STEP 7 or the TIA Portal.

© Siemens AG 2024

Function (continued)

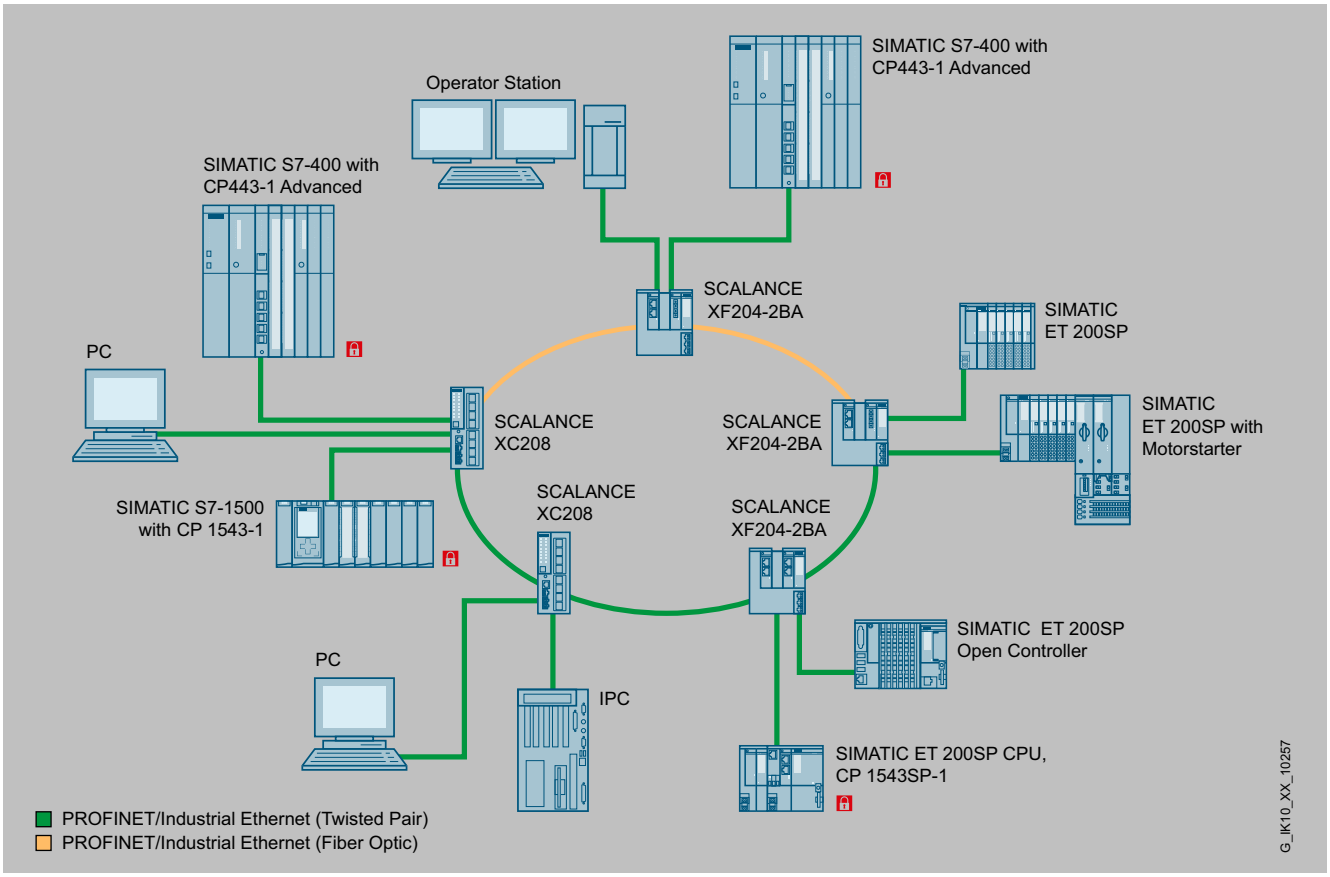

Optimal design of a ring topology with SCALANCE XF-200BA and SCALANCE XC-200

Commissioning and diagnostics

PROFINET diagnostic interrupts from the SCALANCE XF204-2BA can be displayed with the appropriate SIMATIC engineering tools and then processed in the PLC with an expanded diagnostic function. The engineering outlay for the PLC and HMI has been drastically reduced due to the complete integration in the SIMATIC concept for system error messages.

The SCALANCE XF204-2BA Industrial Ethernet switch can also be integrated into a network management system, e.g. SINEC NMS, through the standardized Simple Network Management Protocol (SNMP). In the event of faults in the device, error messages (SNMP traps) can be sent to a network management system (e.g. SINEC NMS) or as an email to a specified network administrator.

The integrated web server enables configuration and diagnostics settings to be made using a standard web browser (e.g. port configuration). Statistical information can also be read out over the web server (e.g. port capacity utilization).

The following information is displayed on site by LEDs:

- Voltage/power
- Errors
- Redundancy

© Siemens AG 2024

Function (continued)

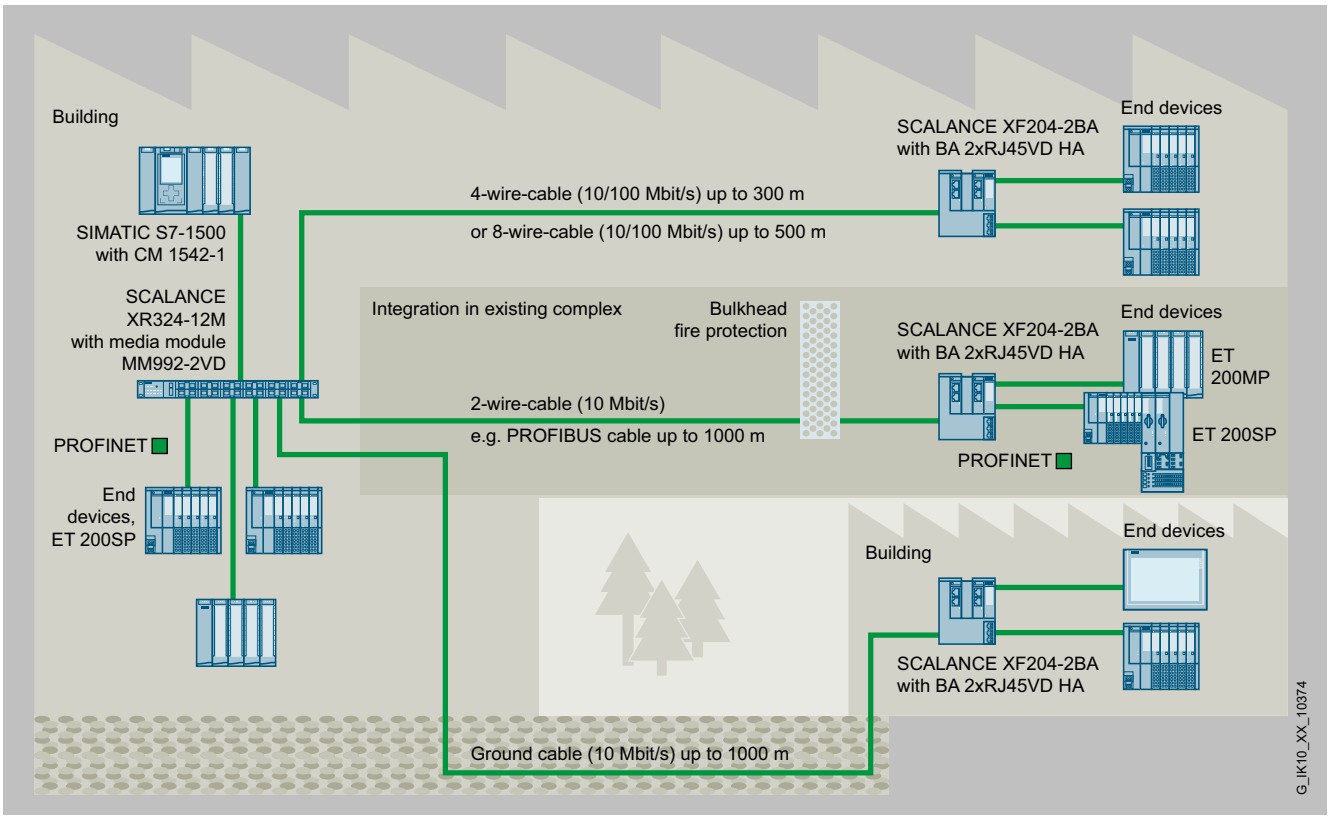

Ethernet communication via 2, 4 or 8-wire copper cables for communication up to 1000 m with VD technology

© Siemens AG 2024

Selection and ordering data

	Article No.
SCALANCE XF204-2BA Industrial Ethernet switches Managed switch with 2 x BusAdapter interfaces, 24 V DC redundant power supply, PN device, extended temperature range, conformal coating, configuration software on CD-ROM	
• **SCALANCE XF204-2BA** 4 x 10/100 Mbps, 2 x BusAdapter interface, fault signaling contact, SET button, redundant 24 V DC power supply, PROFINET device, extended temperature range -40 °C ... +70 °C, conformal coating, with electronic manual on DVD, C-PLUG optional, supplied without BusAdapter	6GK5204-2AA00-2GF2
• **SCALANCE XF204-2BA** two BA 2xRJ45 HA BusAdapters pre-assembled 6DL1193-6AR00-0AA0, 4 x 10/100 Mbps, 2 x BusAdapter interface, fault signaling contact, SET button, redundant 24 V DC power supply, PROFINET device, extended temperature range -40°C ... +70°C, conformal coating, with electronic manual on DVD, C-PLUG optional, supplied with BusAdapter	6GK5204-0BA00-2GF2

Accessories

	Article No.
SIMATIC ET 200SP PS 24 V/5 A Stabilized power supply Input: 120/230 V AC Output: 24 V DC/5 A	6EP7133-6AB00-0BN0
SIMATIC ET 200SP HA, BA 2×RJ45 BusAdapter, 2 RJ45 sockets PROFINET BusAdapter with Ethernet socket for standard RJ45 plug, with coated PCBs (conformal coating)	6DL1193-6AR00-0AA0
SIMATIC ET 200SP HA, BA 2×FC BusAdapter, 2 FastConnect connections PROFINET BusAdapter with FastConnect Ethernet connection for direct bus cable connection, with coated PCBs (conformal coating)	6DL1193-6AF00-0AA0
BA 2xRJ45VD HA BusAdapter BusAdapter with coated PCBs (conformal coating) and VD technology for connecting 2, 4 and 8-wire cables via standard RJ45 plugs	6GK5991-2VA00-8AA2
ET 200SP, BA 2xSCRJ BusAdapter SIMATIC ET 200SP, BA 2xSCRJ BusAdapter, 2 SCRJ FO connections for PROFINET	6ES7193-6AP00-0AA0
ET 200SP, BA SCRJ/RJ45 BusAdapter SIMATIC ET 200SP, BA SCRJ/RJ45 BusAdapter, media converter FOC-CU 1x SCRJ FO connection and 1x RJ45 connection for PROFINET	6ES7193-6AP20-0AA0
ET 200SP, BA SCRJ/FC BusAdapter SIMATIC ET 200SP, BusAdapter: BA SCRJ/FC, media converter FOC-CU 1x SCRJ FO connection and 1x FastConnect (FC) connection for PROFINET	6ES7193-6AP40-0AA0
C-PLUG (conformal coating) C-PLUG removable data storage medium for simple replacement of devices in the event of a fault; for storing configuration or engineering and application data; can be used in SIMATIC NET products with C-PLUG slot, conformal coating	6GK1900-0AQ00
IE TP cord RJ45/RJ45 Preassembled 8-core Cat6A patch cable 4 x 2, with two RJ45 plugs, preferred length	
• 0.3 m	6XV1870-3QE30
• 0.5 m	6XV1870-3QE50
• 1 m	6XV1870-3QH10
• 2 m	6XV1870-3QH20
• 3 m	6XV1870-3QH30
• 4 m	6XV1870-3QH40
• 6 m	6XV1870-3QH60
• 10 m	6XV1870-3QN10
• 15 m	6XV1870-3QN15
• 20 m	6XV1870-3QN20
• 25 m	6XV1870-3QN25
• 30 m	6XV1870-3QN30
• 35 m	6XV1870-3QN35

© Siemens AG 2024

Accessories (continued)

	Article No.
• 40 m	6XV1870-3QN40
• 45 m	6XV1870-3QN45
• 50 m	6XV1870-3QN50
FO standard cable GP 50/125/1400 Multimode cable, sold by the meter; max. delivery unit 1000 m, minimum order quantity 20 m, also available preassembled with LC connectors in various lengths	6XV1873-2A
SCALANCE TAP104 Test access port for the reaction-free extraction of Ethernet data frames (10/100 Mbps) from both transmission directions; extracts complete data traffic, including faulty frames, for further diagnostics.	6GK5104-0BA00-1SA2

© Siemens AG 2024

Technical specifications

Article number	6GK5204-2AA00-2GF2	6GK5204-0BA00-2GF2
product type designation		
product brand name	SCALANCE	SCALANCE
product type designation	XF204-2BA	XF204
transfer rate		
transfer rate	10 Mbit/s, 100 Mbit/s	10 Mbit/s, 100 Mbit/s
interfaces for communication integrated		
number of electrical connections		
• for network components or terminal equipment	0	4
interfaces other		
number of electrical connections		
• for signaling contact	1	1
• for power supply	1	1
type of electrical connection		
• for signaling contact	2-pole terminal block	2-pole terminal block
• for power supply	2-pole terminal block	2-pole terminal block
design of the removable storage		
• C-PLUG	Yes	Yes
operating voltage of the signaling contacts		
• at DC rated value	24 V	24 V
operational current of the signaling contacts		
• at DC maximum	0.1 A	0.1 A
supply voltage, current consumption, power loss		
product component connection for redundant voltage supply	Yes	Yes
type of voltage 1 of the supply voltage	DC	DC
• supply voltage 1 rated value	24 V	24 V
• power loss [W] 1 rated value	8.6 W	8.6 W
• supply voltage 1 rated value	19.2 ... 28.8 V	19.2 ... 28.8 V
• consumed current 1 maximum	0.36 A	0.36 A
• type of electrical connection 1 for power supply	2-pole terminal block	2-pole terminal block
• product component 1 fusing at power supply input	Yes	Yes
• fuse protection type 1 at input for supply voltage	2.5 A (cannot be changed by user)	2.5 A (cannot be changed by user)
ambient conditions		
ambient temperature		
• during operation	-40 ... +70 °C	-40 ... +70 °C
• during storage	-40 ... +85 °C	-40 ... +85 °C
• during transport	-40 ... +85 °C	-40 ... +85 °C
relative humidity		
• at 25 °C without condensation during operation maximum	95 %	95 %
protection class IP	IP20	IP20
design, dimensions and weights		
design	compact	compact
width	100 mm	100 mm
height	117 mm	117 mm
depth	74 mm	74 mm
net weight	0.21 kg	0.25 kg
fastening method		
• 35 mm top hat DIN rail mounting	Yes	Yes
• wall mounting	No	No
• S7-300 rail mounting	No	No
• S7-1500 rail mounting	No	No

© Siemens AG 2024

Technical specifications (continued)

Article number	6GK5204-2AA00-2GF2	6GK5204-0BA00-2GF2
product features, product functions, product components general		
cascading in the case of a redundant ring at reconfiguration time of <\~0.3\~s	50	50
cascading in cases of star topology	any (depending only on signal propagation time)	any (depending only on signal propagation time)
product functions management, configuration, engineering		
product function		
• CLI	Yes	Yes
• web-based management	Yes	Yes
• MIB support	Yes	Yes
• TRAPs via email	Yes	Yes
• configuration with STEP 7	Yes	Yes
• port mirroring	Yes	Yes
• multiport mirroring	Yes	Yes
• PROFINET IO diagnosis	Yes	Yes
• switch-managed	Yes	Yes
PROFINET conformity class	B	B
network load class according to PROFINET	2	
protocol is supported		
• Telnet	Yes	Yes
• HTTP	Yes	Yes
• HTTPS	Yes	Yes
• TFTP	Yes	Yes
• FTP	No	No
• BOOTP	No	No
• DCP	Yes	Yes
• LLDP	Yes	Yes
• SNMP v1	Yes	Yes
• SNMP v2	Yes	Yes
• SNMP v3	Yes	Yes
identification & maintenance function		
• I&M0 - device-specific information	Yes	Yes
• I&M1 - higher level designation/location designation	Yes	Yes
product functions diagnostics		
product function		
• port diagnostics	Yes	Yes
• statistics Packet Size	Yes	Yes
• statistics packet type	Yes	Yes
• error statistics	Yes	Yes
product functions VLAN		
number of VLANs maximum	257	
number of VLANs - dynamic maximum	257	
number of VLANs at ring redundancy (HRP; MRP; standby link)	257	
product functions DHCP		
product function		
• DHCP client	Yes	Yes
product functions redundancy		
protocol is supported Media Redundancy Protocol (MRP)	Yes	Yes
product function		

© Siemens AG 2024

Technical specifications (continued)

Article number	6GK5204-2AA00-2GF2	6GK5204-0BA00-2GF2
• media redundancy protocol (MRP) with redundancy manager	Yes	Yes
• Media Redundancy Protocol Interconnection (MRP-I)	Yes	Yes
• Media Redundancy Protocol for Planned Duplication (MRPD)	No	No
• of the PROFINET IO device is supported H-Sync forwarding	Yes	Yes
• of the PROFINET IO device is supported PROFINET system redundancy	Yes	Yes
• ring redundancy	Yes	Yes
• high speed redundancy protocol (HRP) with redundancy manager	Yes	Yes
• high speed redundancy protocol (HRP) with standby redundancy	Yes	Yes
• redundancy procedure RSTP+	Yes	Yes
• Parallel Redundancy Protocol (PRP)/operation in the PRP-network	No	No
• Parallel Redundancy Protocol (PRP)/Redundant Network Access (RNA)	No	No
• passive listening	Yes	Yes
system modification during operation		
product function configuration in RUN via CiR/H-CiR	Yes	
product functions security		
protocol is supported		
• SSH	Yes	Yes
product functions time		
product function		
• SICLOCK support	No	No
protocol is supported		
• NTP	No	No
• SNTP	Yes	Yes
standards, specifications, approvals		
certificate of suitability		
• CE marking	Yes	Yes
• cULus approval	Yes	
• KC approval	Yes	Yes
• Regulatory Compliance Mark (RCM)	Yes	
standard		
• for safety from CSA and UL	UL 508 E85972	UL 61010-2-201
standards, specifications, approvals hazardous environments		
certificate of suitability		
• ATEX	Yes	
• UKEX	Yes	
• IECEx	Yes	
• ULhazloc approval	Yes	
• CCC for hazardous zone according to GB standard	Yes	
• FM registration	Yes	
standards, specifications, approvals other		
certificate of suitability		
• railway application in accordance with EN 50155	No	
• railway application in accordance with EN 50124-1	No	No
• RoHS conformity	Yes	
IT security for industrial automation systems according to IEC 62443-4-2:2019	Yes	Yes
standards, specifications, approvals marine classification		
Marine classification association		
• American Bureau of Shipping Europe Ltd. (ABS)	Yes	

© Siemens AG 2024

Technical specifications (continued)

Article number	6GK5204-2AA00-2GF2	6GK5204-0BA00-2GF2
• French marine classification society (BV)	Yes	
• DNV GL	Yes	
• Korean Register of Shipping (KRS)	Yes	
• Lloyds Register of Shipping (LRS)	Yes	
• Nippon Kaiji Kyokai (NK)	Yes	
• Polski Rejestr Statkow (PRS)	Yes	
• Royal Institution of Naval Architects (RINA)	Yes	
standards, specifications, approvals Environmental Product Declaration		
Environmental Product Declaration	Yes	
Global Warming Potential [CO2 eq]		
• total	95.76 kg	
• during manufacturing	20.21 kg	
• during operation	75.23 kg	
• after end of life	0.32 kg	
product functions general		
reference code		
• according to IEC 81346-2	KF	KF
• according to IEC 81346-2:2019	KFE	KFE
Warranty period	5 a	5 a
further information internet links		
internet link		
• to website: Selection guide for cables and connectors	https://support.industry.siemens.com/cs/ww/en/view/109766358	https://support.industry.siemens.com/cs/ww/en/view/109766358
• to web page: selection aid TIA Selection Tool	https://www.siemens.com/tstcloud	https://www.siemens.com/tstcloud
• to website: Industrial communication	https://www.siemens.com/simatic-net	https://www.siemens.com/simatic-net
• to web page: SiePortal	https://sieportal.siemens.com/	https://sieportal.siemens.com/
• to website: Image database	https://www.automation.siemens.com/bilddb	https://www.automation.siemens.com/bilddb
• to website: CAx-Download-Manager	https://www.siemens.com/cax	https://www.siemens.com/cax
• to website: Industry Online Support	https://support.industry.siemens.com	https://support.industry.siemens.com

More information

Selection Tool:

To support the selection of SCALANCE network components, the TIA Selection Tool is available at:

www.siemens.com/tst

Ordering overview:

You can find more information on the FastConnect range in the "Cabling technology for communication networks in industry" ordering overview.

© Siemens AG 2024

Overview

SCALANCE X-204RNA for HSR (High-availability Seamless Redundancy Protocol in accordance with IEC 62439-3) and PRP (Parallel Redundancy Protocol in accordance with IEC 62439-3)

HSR

The SCALANCE X-200RNA (**R**edundant **N**etwork **A**ccess) managed Industrial Ethernet network access points with HSR functionality are used to connect up to two non-HSR-enabled terminal devices or network segments to a ring-shaped HSR network structure. They can also be used for simple and redundant transition from HSR to PRP (Parallel Redundancy Protocol) network structures.

- Media redundancy thanks to duplicate transmission of frames in ring-shaped networks
- High system availability since frames are sent simultaneously via two routes in the ring
- No reconfiguration times of the ring-shaped network are required in the event of an error due to duplicate transmission of frames in the ring
- Simple and redundant connection of HSR and PRP network structures

PRP

The SCALANCE X-200RNA (**R**edundant **N**etwork **A**ccess) managed Industrial Ethernet network access points with PRP functionality are used to connect up to two non-PRP-enabled terminal devices or network segments to parallel networks.

- Media redundancy thanks to duplicate transmission of frames in two parallel, separate networks
- High system availability since frames are sent simultaneously over two separate networks
- Reconfiguration times in a subnetwork do not affect the propagation time because the frames are transmitted via two separate networks (bumpless redundancy)

Product variants

- Network access point in plastic enclosure with electrical ports
  - SCALANCE X204RNA for HSR or PRP networks

    For connecting up to two non-HSR- or PRP-enabled terminal devices to ring-shaped networks with four electrical ports
- Network access point in metal enclosure with electrical and optical ports as well as a wide-range power supply unit for use in expanded ambient conditions

Overview (continued)

  - SCALANCE X204RNA EEC for HSR or PRP networks

    For connecting up to two non-HSR- or PRP-enabled terminal devices to ring-shaped networks with two electrical terminal device ports and two optical/electrical combo ports for network connection
  - SCALANCE X204RNA EEC for PRP or HSR networks

    For connecting up to two non-PRP-enabled or non-HSR-enabled terminal devices to redundant networks with two electrical terminal device ports and two optical/electrical combo ports for network connection. PRP or HSR function can be defined by the user when starting the device (for description of PRP function, see chapter on X204RNA with PRP function).
- Redundant 24 V DC voltage infeed or wide-range power supply unit, depending on device version
- SNMP access, integrated web server and automatic email transmission function for remote diagnostics and signaling via the network
- Integration into the SINEC NMS network management system for end-to-end network diagnostics with central firmware management

Benefits

get Designed for Industry

- Ideal solution for establishing Industrial Ethernet networks with high network availability
- HSR: Bumpless data transmission in ring-shaped network structures for high availability systems (e.g. process automation)
- PRP: Bumpless data transmission in parallel network structures for high availability systems
- Quick and easy diagnostics with LEDs on the device, using integrated web server or SINEC NMS and via signaling contact
- Integration of SCALANCE X-200RNA network access points in existing network management systems (e.g. SINEC NMS) through SNMP access
- Simple commissioning without mandatory configuring
- Module replacement without the need for a programming device, using the C-plug removable data storage medium for backing up the configuration data

© Siemens AG 2024

Application

The SCALANCE X-200RNA Industrial Ethernet network access points enable low-cost connection of non-HSR-enabled terminal devices to ring networks, and non-PRP-enabled terminal devices to parallel, separate networks with high availability requirements. The devices with degree of protection IP20 are designed for use in the control cabinet.

Features:

- Device diagnostics with LEDs (power, link status, data communication)
- Remote diagnostics is possible through signaling contact (signal mask can be set locally using buttons), SNMP or SINEC NMS and web browser
- With their suitability for an extended range of ambient conditions, the SCALANCE X-200RNA EEC modules can be used in power switching and distribution systems (IEC 61850-3, IEEE 1613) in tough industrial environments

Design

The SCALANCE X204RNA and X204RNA EEC network access points with rugged plastic or metal enclosures have been optimized for mounting on a DIN rail and for direct wall mounting in different mounting positions.

The network access points with IP20 degree of protection feature:

- A 4-pin terminal block for connecting the redundant supply voltage (2 x 24 V DC), or a 3-pin terminal block in the case of the wide-range power supply unit
- A row of LEDs to indicate the status information (power, link status, data traffic, power supply, signaling contact)
- A 2-pin or 3-pin terminal block for connecting the floating signaling contact in the corresponding voltage range
- A SET button for on-site configuration of the signaling contact

The SCALANCE X-200RNA modules are available with the following port types:

- 100BaseTX, RJ45 connection;

  RJ45 port with a data transmission rate of 100 Mbps, with autosensing and autocrossover function for connecting IE FC cables via IE FC RJ45 plug 180 up to 100 m
- 100BaseTX, combo port (RJ45, SFP slot);

  100 Mbps combo ports for direct connection to Industrial Ethernet copper cables or glass fiber-optic cables (multimode/single-mode fiber-optic cable);

  if the RJ45 interface of the combo port is used, the SFP slot is deactivated, and vice versa.

Function

- Connection of non-HSR-enabled terminal equipment to ring-shaped networks, and non-PRP-enabled terminal devices to parallel, separate networks
- Transition from ring-shaped HSR networks to parallel PRP network structures with HSR and combination unit
- Parallel data transfer by means of duplicate transmission in the ring network, or via two parallel separate networks
- Uncrossed connecting cables can be used due to autocrossover function integrated in the ports
- Easy diagnostics using signaling contact, SNMP and web browser
- Fast device replacement in the event of a fault by using the optional C-PLUG removable data storage medium (not included in scope of supply)

Network topology and network configuration

The SCALANCE X-200RNA switches with IP20 degree of protection are usually installed in a control cabinet together with the stations to be connected. They can be mixed electrically and optically in star and line topologies.

When configuring the network, the following boundary conditions must be observed:

- Length of the twisted pair cable between the network and SCALANCE X-200RNA:
  - Max. 100 m with IE FC cable and IE FC RJ45 plug 180
  - Max. 10 m using patches with TP cord
- Length of the optical cables between the network and SCALANCE X-200RNA
  - Max. 5000 m with Industrial Ethernet glass fiber-optic cables (multimode)
  - Max. 26 000 m with Industrial Ethernet glass fiber-optic cables (single-mode)
- IP address:

  The IP address is assigned via the DHCP (Dynamic Host Configuration Protocol). If there is no corresponding server in the network, the IP address can be assigned using the supplied software tool PST (Primary Setup Tool).

Commissioning and diagnostics

The SCALANCE X-200RNA Industrial Ethernet network access points can be integrated into a network management system (e.g. SINEC NMS) via the standardized protocol SNMP (**S**imple **N**etwork **M**anagement **P**rotocol). In the event of faults in the device, error messages (SNMP traps) can be sent to a network management system (e.g. SINEC NMS) or as an email to a specified network administrator.

The integrated web server enables configuration and diagnostics settings to be made using a standard web browser (e.g. port configuration). Statistical information can also be read out over the web server (e.g. port capacity utilization).

The following information is displayed on site by LEDs:

- Power
- Port status
- Data traffic
- Signaling contact
- HSR activity

The SCALANCE X-200RNA Industrial Ethernet network access points can also be monitored using the floating signaling contact.

© Siemens AG 2024

Function (continued)

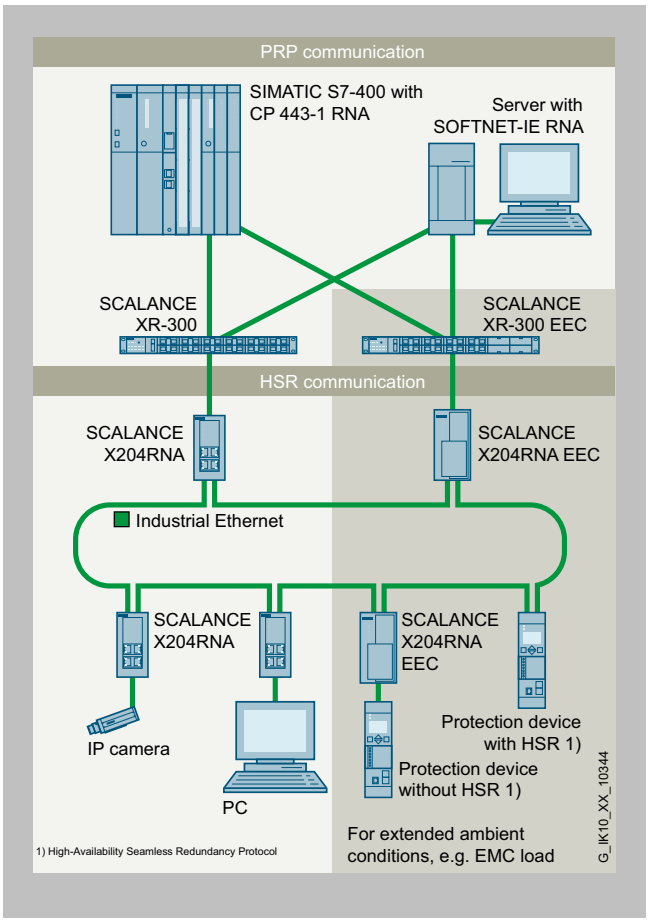

Bumpless, redundant communication in networks with PRP and HSR-enabled SIMATIC NET and Industrial Ethernet switch components

Selection and ordering data

	Article No.
SCALANCE X-200RNA managed Industrial Ethernet network access points Industrial Ethernet network access points with integrated SNMP access, web diagnostics and PROFINET diagnostics; incl. operating instructions, Industrial Ethernet network manual and configuration software on CD ROM; with electrical and optical ports for glass multimode fiber-optic cables up to 5 km ***HSR;*** for connecting non-HSR-enabled terminal devices to ring-shaped HSR networks	
• **SCALANCE X204RNA** with four 100 Mbps RJ45 ports	6GK5204-0BA00-2MB2
• **SCALANCE X204RNA EEC** with two 100 Mbps RJ45 ports and two RJ45/SFP combo ports	6GK5204-0BS00-2NA3
• **SCALANCE X204RNA EEC** with two 100 Mbps RJ45 ports and two RJ45/SFP combo ports with PRP or HSR support	6GK5204-0BS00-3PA3
PRP; for connecting non-PRP-enabled terminal devices to PRP networks	
• **SCALANCE X204RNA** with four 100 Mbps RJ45 ports	6GK5204-0BA00-2KB2
• **SCALANCE X204RNA EEC** with two 100 Mbps RJ45 ports and two RJ45/SFP combo ports	6GK5204-0BS00-3LA3
• **SCALANCE X204RNA EEC** with two 100 Mbps RJ45 ports and two RJ45/SFP combo ports with PRP and HSR support	6GK5204-0BS00-3PA3
SIMATIC NET communications processor CP 443-1 RNA S7 integration into bumpless, redundant network structures on the basis of the Parallel Redundancy Protocol (PRP)	6GK7443-1RX00-0XE0
SOFTNET-IE RNA Software for connecting PCs to PRP-enabled networks with integrated SNMP, runtime software, software and electronic manual on CD-ROM, license key on USB flash drive, Class A	
Software Update Service For one year with automatic extension Requirement: current software version	6GK1711-1EW00-3AL0

© Siemens AG 2024

Accessories

	Article No.
SITOP compact 24 V/0.6 A 1-phase power supply with wide-range input 85 - 264 V AC/110 - 300 V DC, stabilized output voltage 24 V, rated output current value 0.6 A, slim design	6EP1331-5BA00
SFP plug-in transceiver	
• SFP991-1 (multimode, glass, up to 3 km)	6GK5991-1AD00-8AA0
• SFP991-1LH+ (single-mode, glass, up to 70 km, LH+)	6GK5991-1AE00-8AA0
• SFP991-1LD (single-mode, glass, up to 26 km)	6GK5991-1AF00-8AA0
• SFP991-1ELH200 (single-mode, glass up to 200 km)	6GK5991-1AE30-8AA0
IE TP cord RJ45/RJ45 Preassembled 8-core Cat6$_A$ patch cable 4 x 2, with two RJ45 plugs, preferred length	
• 0.3 m	6XV1870-3QE30
• 0.5 m	6XV1870-3QE50
• 1 m	6XV1870-3QH10
• 2 m	6XV1870-3QH20
• 3 m	6XV1870-3QH30
• 4 m	6XV1870-3QH40
• 6 m	6XV1870-3QH60
• 10 m	6XV1870-3QN10
• 15 m	6XV1870-3QN15
• 20 m	6XV1870-3QN20
• 25 m	6XV1870-3QN25
• 30 m	6XV1870-3QN30
• 35 m	6XV1870-3QN35
• 40 m	6XV1870-3QN40
• 45 m	6XV1870-3QN45
• 50 m	6XV1870-3QN50
FO standard cable GP 50/125/1400 Multimode cable, sold by the meter; max. delivery unit 1000 m, minimum order quantity 20 m, also available preassembled with LC connectors in various lengths	6XV1873-2A
SCALANCE TAP104 Test access port for the reaction-free extraction of Ethernet data frames (10/100 Mbps) from both transmission directions; extracts complete data traffic, including faulty frames, for further diagnostics.	6GK5104-0BA00-1SA2

© Siemens AG 2024

Technical specifications

Article number	6GK5204-0BA00-2MB2 6GK5204-0BA00-2KB2	6GK5204-0BS00-2NA3 6GK5204-0BS00-3LA3	6GK5204-0BS00-3PA3
product type designation			
product brand name	SCALANCE	SCALANCE	SCALANCE
product type designation	X204RNA	X204RNA EEC	X204RNA EEC
transfer rate			
transfer rate	10 Mbit/s, 100 Mbit/s	10 Mbit/s, 100 Mbit/s	10 Mbit/s, 100 Mbit/s
interfaces for communication integrated			
number of electrical connections			
• for network components or terminal equipment	4	2	2
number of combo ports with RJ45 interface for optical plug-in transceiver		2	2
interfaces other			
number of electrical connections			
• for signaling contact	1	1	1
• for power supply	1	1	1
type of electrical connection			
• for signaling contact	2-pole terminal block	3-pole terminal block	3-pole terminal block
• for power supply	4-pole terminal block	3-pole terminal block	3-pole terminal block
design of the removable storage			
• C-PLUG	Yes	Yes	Yes
operating voltage of the signaling contacts			
• at AC rated value		230 V	230 V
• at DC rated value	24 V	24 V	24 V
operational current of the signaling contacts			
• at AC maximum		0.1 A	0.1 A
• at DC maximum	0.1 A	0.1 A	0.1 A
supply voltage, current consumption, power loss			
product component connection for redundant voltage supply	Yes	Yes	
type of voltage 1 of the supply voltage	DC	DC	DC
• supply voltage 1 rated value	24 V	24 V	24 V
• power loss [W] 1 rated value	3.5 W	6 W	6 W
• supply voltage 1 rated value	19.2 ... 28.8 V	85 ... 276 V	85 ... 276 V
• consumed current 1 maximum	0.15 A	0.25 A	0.25 A
• type of electrical connection 1 for power supply	4-pole terminal block	3-pole terminal block	3-pole terminal block
• product component 1 fusing at power supply input	Yes	Yes	Yes
• fuse protection type 1 at input for supply voltage	2.0 A	1.25 A	1.25 A
type of voltage 2 of the supply voltage		AC	AC
• supply voltage 2 rated value		85 ... 276 V	85 ... 276 V
ambient conditions			
ambient temperature			
• during operation	-40 ... +60 °C	-40 ... +70 °C	-40 ... +70 °C
• during storage	-40 ... +70 °C	-40 ... +70 °C	-40 ... +70 °C
• during transport	-40 ... +70 °C	-40 ... +70 °C	-40 ... +70 °C
• note		A maximum operating temperature of +85 °C is permissible for a duration of 16 hours	A maximum operating temperature of +85 °C is permissible for a duration of 16 hours
relative humidity			
• at 25 °C without condensation during operation maximum	95 %	95 %	95 %
protection class IP	IP20	IP20	IP20

© Siemens AG 2024

Technical specifications (continued)

Article number	6GK5204-0BA00-2MB2 6GK5204-0BA00-2KB2	6GK5204-0BS00-2NA3 6GK5204-0BS00-3LA3	6GK5204-0BS00-3PA3
design, dimensions and weights			
design	compact	compact	compact
width	45 mm	70 mm	70 mm
height	100 mm	147 mm	147 mm
depth	87 mm	123 mm	123 mm
net weight	0.23 kg	0.78 kg	0.78 kg
product feature conformal coating		Yes	Yes
fastening method			
• 35 mm top hat DIN rail mounting	Yes	Yes	Yes
• wall mounting	Yes	No	No
• S7-300 rail mounting	No	No	No
• S7-1500 rail mounting	No	No	No
product functions management, configuration, engineering			
product function			
• CLI	Yes	Yes	Yes
• web-based management	Yes	Yes	Yes
• MIB support	Yes	Yes	Yes
• TRAPs via email	Yes	Yes	Yes
• configuration with STEP 7	No	No	No
• port mirroring	No	No	No
• multiport mirroring	No	No	No
• with IRT PROFINET IO switch	No	No	No
• PROFINET IO diagnosis	No	No	No
• switch-managed	No	No	No
protocol is supported			
• Telnet	No	No	No
• HTTP	Yes	Yes	Yes
• HTTPS	Yes	Yes	Yes
• TFTP	No	No	No
• FTP	No	No	No
• BOOTP	No	No	No
• GMRP	No	No	No
• DCP	Yes	Yes	Yes
• LLDP	No	No	No
• SNMP v1	Yes	Yes	Yes
• SNMP v2	Yes	Yes	Yes
• SNMP v3	Yes	Yes	Yes
• IGMP (snooping/querier)	No	No	No
identification & maintenance function			
• I&M0 - device-specific information	Yes	Yes	Yes
• I&M1 - higher level designation/location designation	Yes	Yes	Yes
product functions diagnostics			
product function			
• port diagnostics	Yes	Yes	Yes
• statistics Packet Size	Yes	Yes	Yes
• statistics packet type	Yes	Yes	Yes
• error statistics	Yes	Yes	Yes

© Siemens AG 2024

Technical specifications (continued)

Article number	6GK5204-0BA00-2MB2 6GK5204-0BA00-2KB2	6GK5204-0BS00-2NA3 6GK5204-0BS00-3LA3	6GK5204-0BS00-3PA3
product functions redundancy			
protocol is supported Media Redundancy Protocol (MRP)	No	No	No
product function			
• media redundancy protocol (MRP) with redundancy manager	No	No	No
• high speed redundancy protocol (HRP) with redundancy manager	No	No	No
• high speed redundancy protocol (HRP) with standby redundancy	No	No	No
• Parallel Redundancy Protocol (PRP)/Redundant Network Access (RNA)	Yes	Yes	Yes
• High-availability Seamless Redundancy (HSR) and Parallel Redundancy Protocol (PRP) coupling	No	No	Yes
• passive listening	No	No	No
product functions security			
protocol is supported			
• SSH	Yes	Yes	Yes
product functions time			
product function			
• SICLOCK support	No	No	No
protocol is supported			
• NTP	No	No	No
• SNTP	Yes	Yes	Yes
standards, specifications, approvals			
certificate of suitability			
• CE marking	Yes	Yes	Yes
• cULus approval		Yes	Yes
• KC approval	Yes	Yes	Yes
• Regulatory Compliance Mark (RCM)	Yes	Yes	Yes
standard			
• for EMC		IEC 61850, IEEE 1613	IEC 61850, IEEE 1613
• for safety from CSA and UL	UL 60950-1 E115352, CSA C22.2 No. 60950-1	UL 508 E85972, CSA C22.2 no. 142-M1987	UL 508 E85972, CSA C22.2 no. 142-M1987
standards, specifications, approvals hazardous environments			
certificate of suitability			
• ATEX	Yes		
• IECEx	Yes		
• CCC for hazardous zone according to GB standard	Yes		
• FM registration	Yes		
standards, specifications, approvals other			
certificate of suitability			
• railway application in accordance with EN 50155	No	Yes	Yes
• railway application in accordance with EN 50121-4		Yes	Yes
• railway application in accordance with EN 50124-1	No	No	No
• fire protection in accordance with EN 45545-2		Yes	Yes
• IEC 61850-3	No	Yes	Yes
• IEEE 1613		Yes	Yes
• RoHS conformity	Yes	Yes	Yes

© Siemens AG 2024

Technical specifications (continued)

Article number	6GK5204-0BA00-2MB2 6GK5204-0BA00-2KB2	6GK5204-0BS00-2NA3 6GK5204-0BS00-3LA3	6GK5204-0BS00-3PA3
standards, specifications, approvals marine classification			
Marine classification association			
• American Bureau of Shipping Europe Ltd. (ABS)		Yes	Yes
• French marine classification society (BV)		Yes	Yes
• DNV GL		Yes	Yes
• Korean Register of Shipping (KRS)		Yes	Yes
• Lloyds Register of Shipping (LRS)		Yes	Yes
• Nippon Kaiji Kyokai (NK)		Yes	Yes
• Polski Rejestr Statkow (PRS)		Yes	Yes
• Royal Institution of Naval Architects (RINA)		Yes	Yes
product functions general			
MTBF	92.45 a	67.64 a	67.64 a
reference code			
• according to IEC 81346-2	KF	KF	KF
• according to IEC 81346-2:2019	KFE	KFE	KFE
further information internet links			
internet link			
• to website: Selection guide for cables and connectors	https://support.industry.siemens.com/cs/ww/en/view/109766358	https://support.industry.siemens.com/cs/ww/en/view/109766358	https://support.industry.siemens.com/cs/ww/en/view/109766358
• to web page: selection aid TIA Selection Tool	https://www.siemens.com/tstcloud	https://www.siemens.com/tstcloud	https://www.siemens.com/tstcloud
• to website: Industrial communication	https://www.siemens.com/simatic-net	https://www.siemens.com/simatic-net	https://www.siemens.com/simatic-net
• to website: Image database	https://www.automation.siemens.com/bilddb	https://www.automation.siemens.com/bilddb	https://www.automation.siemens.com/bilddb
• to website: CAx-Download-Manager	https://www.siemens.com/cax	https://www.siemens.com/cax	https://www.siemens.com/cax
• to website: Industry Online Support	https://support.industry.siemens.com	https://support.industry.siemens.com	https://support.industry.siemens.com

More information

Selection Tool:

To support the selection of SCALANCE network components, the TIA Selection Tool is available at:

www.siemens.com/tst

Ordering overview:

You can find more information on the FastConnect range in the "Cabling technology for communication networks in industry" ordering overview.

© Siemens AG 2024

Overview

The RUGGEDCOM RSG900R series are compact Gigabit IEEE 1588 compatible Ethernet switches, supporting High Availability Seamless Redundancy (HSR) and Parallel Redundancy Protocol (PRP) according to IEC 62439-3

Combining Ethernet switches with an HSR/PRP redundancy box (RedBox) in a convenient compact design ensures continuous, secure, reliable operations, even during power failures, thereby greatly diminishing the risk of data and revenue loss. IEEE 1588 function support enables the RUGGEDCOM RSG900R to combine precision timing and network communication data in one network, thereby reducing maintenance costs. It can also be used to couple an HSR with a PRP or an RSTP network to operate on both types of redundant networks at the same time. Rugged rated to operate reliably in the harshest environmental conditions, the device provides maintenance-free operation for years at ambient temperatures ranging between –40 °C and +85 °C. It comes with comprehensive approvals for a variety of markets, including IEC 61850-3, IEEE 1613, and IEC Ex.

The RUGGEDCOM RSG900R features the ROS™ (Rugged Operating System) and universal power supply options. It also offers an array of cybersecurity features.

Benefits

- Combination of multi-port Ethernet switch and HSR/PRP redundancy box
- Any compliant fiber optic or copper infrastructure can be used with flexible uplink options Industry standard connectors: SFP, LC and/or RJ45
- Avoid revenue loss by mitigating the risk of communication disruptions and downtime with a redundant fault-tolerant network supporting HSR and/or PRP
- SFP ports allow in-field modification at any time ensuring deployment flexibility for varying customer needs
- Redundant power supply inputs allow for continuous safe and reliable operations even during single power supply failures, diminishing the risk of revenue and data loss
- Reduce maintenance costs by combining precision timing information and data communications in a single network due to the support of IEEE 1588.
- Support of HSR and PRP according to IEC 62439-3
- Supports precision timing according to IEEE 1588 (transparent clock, ordinary clock)
- Non-blocking store and forward switching
- For use at ambient temperatures from –40 °C to +85 °C without the use of fans, and meets CSA/UL 62368 safety approved
- Zero-Packet-Loss technology for immunity to high levels of electromagnetic interference
- RUGGEDCOM ROS features top-of-the-range cybersecurity options, management tools, and a rich set of diagnostics

© Siemens AG 2024

Integration

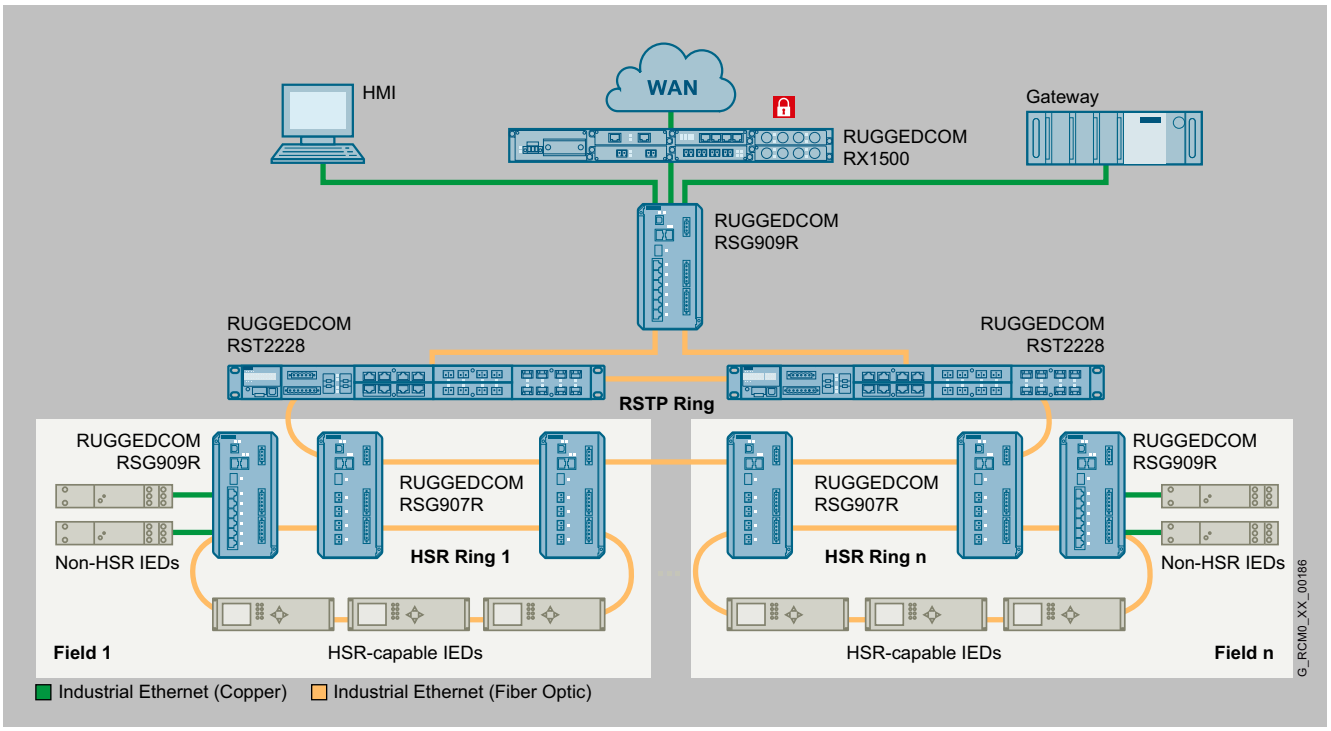

Two RUGGEDCOM RSG907R / RSG909R in each HSR bay ring for redundant coupling with PRP station level LANs.

© Siemens AG 2024

Selection and ordering data

RUGGEDCOM RSG907R RUGGEDCOM RSG907R is a 7 port industrially hardened, fully managed Ethernet switch featuring an integrated HSR/PRP RedBox for use in harsh industrial environments. The product has 3x 1 Gbps SFP slots and 4x 100 Mbps multimode LC ports (max 2 km). -40 °C to +85 °C operating temperature (fanless).	
• **RUGGEDCOM RSG907R**	6GK6490-7RB..-....
RUGGEDCOM RSG909R RUGGEDCOM RSG909R is a 9 port industrially hardened, fully managed Ethernet switch featuring an integrated HSR/PRP RedBox for use in harsh industrial environments. The product has 3x 1 Gbps SFP slots and 6x 10/100/1000 Mbps RJ45 Ethernet ports. -40 °C to +85 °C operating temperature (fanless).	
• **RUGGEDCOM RSG909R**	6GK6498-0RB..-....
RUGGEDCOM accessories	
• **USB Console cable** USB 2.0 A type to B type Cable Assembly 10 feet / 3 meters	6GK6000-8DT01-0AA0
• **Power cable without lugs** Power Cable with North-American plug for pluggable terminal blocks (6 ft.) for RUGGEDCOM products	6GK6000-8BB00-0AA0
• **Panel Mounting Kit for RUGGEDCOM RSG900C** Allows for wall and other lateral mounting for the RUGGEDCOM RSG908C and RSG910C	6GK6000-8MR00-0AA1
• **RJ45 Dust Covers kit** RJ45 dust covers for RUGGEDCOM products, 8 pieces	6GK6000-8HT01-0CA0
• **SFP Dust Covers kit** SFP dust covers for RUGGEDCOM products, 12 pieces	6GK6000-8HT02-0CA0
RUGGEDCOM SFPs	
Copper Ethernet SFP	
• **RUGGEDCOM SFP1112-1** Copper SFP, 10/100/1000 Mbps, RJ45-Interface, Copper, up to max. 100 m, 0 °C ...+70 °C	6GK6000-8CG01-0AA0
Fiber Optic SFPs (Fast Ethernet)	
• **RUGGEDCOM SFP1121-1FX2A** 100BASE-FX, LC-Interface, Optical: Multi Mode Fiber Optic up to max. 2 km, 1310 nm, -40 °C ...+85 °C. Only compatible with the RUGGEDCOM devices supporting active SFPs	6GK6000-8FE50-0AA0
• **RUGGEDCOM SFP1131-1FX10A** 100BASE-LX, LC-Interface, Optical: Single-mode Fiber Optic up to max. 10 km, 1310 nm, -40 °C ...+85 °C. Only compatible with the RUGGEDCOM devices supporting active SFPs	6GK6000-8FE60-0AA0

Selection and ordering data (continued)

• **RUGGEDCOM SFP1131S-1LX40A** 100BASE-LX, LC-Interface, Optical: Single-mode Fiber Optic up to max. 40 km, 1310 nm, -5 °C ...+70 °C. Only compatible with the RUGGEDCOM devices supporting active SFPs	6GK6000-8FE62-0AA0
Fiber Optic SFPs (Gigabit)	
• **RUGGEDCOM SFP1122-1SX** 1000BASE-SX, LC-Interface, Optical: Multi Mode Fiber Optic up to max. 500 m, 850 nm, -40 °C...+85 °C	6GK6000-8FG51-0AA0
• **RUGGEDCOM SFP1122-1SX2** 1000BASE-SX, LC-Interface, Optical: Multi Mode Fiber Optic up to max. 2 km, 1310 nm, -40 °C ...+85 °C	6GK6000-8FE58-0AA0
• **RUGGEDCOM SFP1132-1LX10** 1000BASE-LX, LC-Interface, Optical: Single Mode Fiber Optic up to max. 10 km, 1310 nm, -40 °C ...+85 °C	6GK6000-8FG52-0AA0
• **RUGGEDCOM SFP1132-1LX25** 1000BASE-LX, LC-Interface, Optical: Single Mode Fiber Optic up to max. 25 km, 1310 nm, -40 °C... +85 °C	6GK6000-8FG53-0AA0
• **RUGGEDCOM SFP1132-1LX40** 1000BASE-LX, LC-Interface, Optical: Single Mode Fiber Optic up to max. 40 km, 1550 nm, -40 °C ...+85 °C	6GK6000-8FG57-0AA0
• **RUGGEDCOM SFP1132-1LX70** 1000BASE-LX, LC-Interface, Optical: Single Mode Fiber Optic up to max. 70 km, 1550 nm, -40 °C ...+85 °C	6GK6000-8FG54-0AA0
• **RUGGEDCOM SFP1132-1LX115** 1000BASE-LX, LC-Interface, Optical: Single Mode Fiber Optic up to max. 115 km, 1550 nm, -10 °C ...+70 °C	6GK6000-8FE56-0AA0
Fiber Optic Bi-Directional SFPs (Gigabit)	
• **RUGGEDCOM SFP1132-1BX10R** 1000BASE-BX-U, LC-Interface, Optical: Single Mode Fiber Optic up to max. 10 km, 1310 nm TX/1490 nm RX, -40 °C ...+85 °C	6GK6000-8FB51-0AA0
• **RUGGEDCOM SFP1132-1BX10T** 1000BASE-BX-D, LC-Interface, Optical: Single Mode Fiber Optic up to max. 10 km, 1490 nm TX/1310 nm RX, -40 °C ...+85 °C	6GK6000-8FB52-0AA0
• **RUGGEDCOM SFP1132-1BX40R** 1000BASE-BX-U, LC-Interface, Optical: Single Mode Fiber Optic up to max. 40 km, 1310 nm TX/1490 nm RX, -40 °C ...+85 °C	6GK6000-8FB53-0AA0
• **RUGGEDCOM SFP1132-1BX40T** 1000BASE-BX-D, 1 X 1000 Mbps, LC-Interface, Optical: Single Mode Fiber Optic up to max. 40 km, 1490 nm TX/1310 nm RX, -40 °C ...+85 °C	6GK6000-8FB54-0AA0

More information

To assist in selecting the right RUGGEDCOM products as well as configuration of variants, the RUGGEDCOM Selector is available at:

© Siemens AG 2024

Overview

The RUGGEDCOM RST2228 series is a 28-port, field modular 19" Layer 2 rack switch with 10 Gbps uplinks and compliant with PTP IEEE 1588v2. It supports layer 3 static unicast routing, imparting greater flexibility over standard Layer 2 switches for modern digital substation networks.

Product versions

RUGGEDCOM RST2228

- 28-port field modular managed Layer 2 Gbps switch with 10 Gbps uplinks supporting IEEE 1588v2

RUGGEDCOM RST2228P

- 28-port field modular managed Layer 2 Gbps switch with 10 Gbps uplinks supporting IEEE 1588v2 and Power-over-Ethernet enabled according to IEEE 802.3at/bt (draft)

Benefits

- Future-proof Ethernet switch with high port density to minimize capital expense by reducing the number of Layer 2 switching devices needed.
- Field-modular media modules with RJ45, FastConnect, Power-over-Ethernet, LC & SFP interfaces and build-to-order design ensures seamless servicing and tremendous flexibility in tailoring the device configuration resulting in lower operating expenses.
- Suitable for usage in electric power, transportation and oil & gas applications due to a utility grade design with immunity against EMI and heavy electrical surges.
- Future-proof due to support of modern IEEE 1588 time synchronization features and modular construction that allows network traffic growth to be accommodated by changing only the modules.
- Ensures data integrity and data authentication with MACsec encryption based on IEEE 802.1AE standard that provides data security for point-to-point Layer 2 communications
- Suitable for usage in harsh environments with the minimal risk of mechanical failures due to fan-less operation across an operating temperature range from -40 to +85℃.

Integration

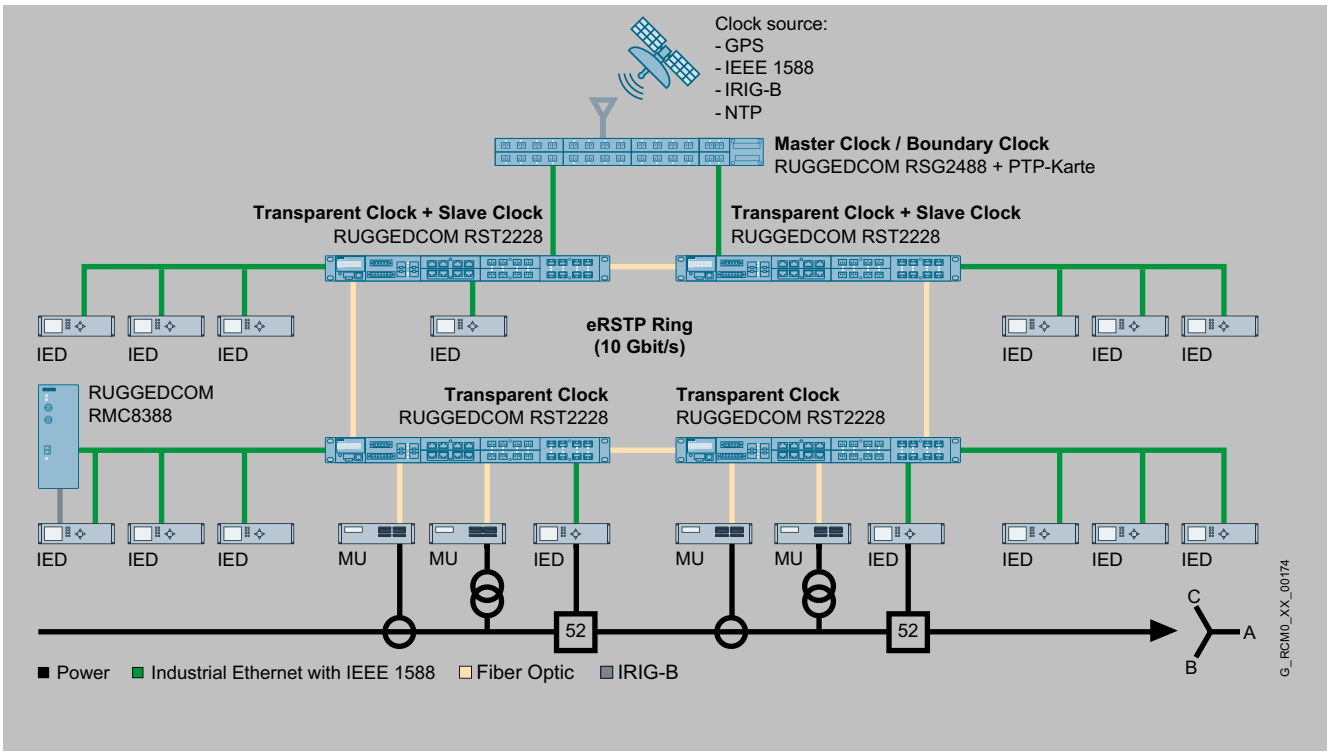

RUGGEDCOM RST2228 with IEEE 1588 V2 and hardware time stamping

© Siemens AG 2024

Selection and ordering data

RUGGEDCOM Rack Switches	
RUGGEDCOM RST2228 RUGGEDCOM RST2228 is a field modular, fully managed Layer 2 Ethernet switch with 4 x 1/10 Gbps and 24 x 100/1000 Mbps non-blocking ethernet ports. Support for up to six 4-port media modules with RJ45, SFP or LC interfaces; -40 °C ... +85 °C operating temperature (fanless)	6GK6222-6AB..-....
RUGGEDCOM RST2228P RUGGEDCOM RST2228P is a field modular, fully managed Layer 2 Ethernet switch with 4 x 1/10 Gbps and 24 x 100/1000 Mbps non-blocking ethernet ports supporting Power-over-Ethernet. Support for up to six 4-port media modules with RJ45, SFP or LC interfaces; -40 °C ...+85 °C operating temperature (fanless)	6GK6222-6PB..-....
RUGGEDCOM accessories	
Media Modules (Standard)	
• **RUGGEDCOM RMM2972-2RNA** Media Module for RUGGEDCOM RST2228, RST2228P to support HSR/PRP functions; port A and B, 2 x 100/1000 Base-X	6GK6297-8SB00-2AA0
• **RUGGEDCOM RMM2973-4RJ45** Media Module for RUGGEDCOM RST2228, 4 x RJ45, 10/100/1000 BASE-TX	6GK6297-3RD00-4AB0
• **RUGGEDCOM RMM2973M-4RJ45** Media Module for RUGGEDCOM RST2228, RST2228P to support IEEE 802.1AE MACsec functionality, 4 x RJ45, 10/100/1000 BASE-TX.	6GK6297-3RM00-4AB0
• **RUGGEDCOM RMM2973-4FC** Media Module for RUGGEDCOM RST2228, 4 x FastConnect (RJ45), 10/100/1000 BASE-TX	6GK6297-3FD00-4AB0
• **RUGGEDCOM RMM2973-4POE** Media Module for RUGGEDCOM RST2228, 4 x 10/100/1000 Mbps Power-over-Ethernet (RJ45) according to IEEE 802.3at/bt (draft) supporting 60 Watt/interface with shared power budget from 120 Watt/module	6GK6297-3PD00-4AB0
• **RUGGEDCOM RMM2973-4PFC** Media Module for RUGGEDCOM RST2228, 4 x 10/100/1000 Mbps Power-over-Ethernet (FastConnect) according to IEEE 802.3at/bt (draft) supporting 60 Watt/interface with shared power budget from 120 Watt/module	6GK6297-3WD00-4AB0
• **RUGGEDCOM RMM2972-4SFP** Media Module for RUGGEDCOM RST2228, 4 x SFP-slot, Supporting 100BASE-FX, 1000BASE-X SFPs, SFPs are not included	6GK6297-2SA00-4AA0
• **RUGGEDCOM RMM2972M-4SFP** Media Module for RUGGEDCOM RST2228, RST2228P to support IEEE 802.1AE MACsec functionality, 4 x SFP-slot, Supporting 100BASE-FX, 1000BASE-X SFPs, SFPs are not included.	6GK6297-2SM00-4AA0

Selection and ordering data (continued)

• **RUGGEDCOM RMM2942-4LC2** Media Module for RUGGEDCOM RST2228, 4 x 100 Mbps LC supporting multi-mode fiber optics up to 2 km	6GK6294-2LD00-4AC0
Media Modules with Conformal Coating	
• **RUGGEDCOM RMM2972C-2RNA** Media Module for RUGGEDCOM RST2228, RST2228P to support HSR/PRP functions; port A and B, 2 x 100/1000 Base-X	6GK6297-8SB00-2AA1
• **RUGGEDCOM RMM2973C-4RJ45** Media Module for RUGGEDCOM RST2228, 4 x RJ45, 10/100/1000 BASE-TX. With Conformal Coating	6GK6297-3RD00-4AB1
• **RUGGEDCOM RMM2973MC-4RJ45** Media Module for RUGGEDCOM RST2228, RST2228P to support IEEE 802.1AE MACsec functionality, 4 x RJ45, 10/100/1000 BASE-TX. With Conformal Coating	6GK6297-3RM00-4AB1
• **RUGGEDCOM RMM2973C-4FC** Media Module for RUGGEDCOM RST2228, 4 x FastConnect (RJ45), 10/100/1000 BASE-TX. With Conformal Coating	6GK6297-3FD00-4AB1
• **RUGGEDCOM RMM2973C-4POE** Media Module for RUGGEDCOM RST2228, 4 x 10/100/1000 Mbps Power-over-Ethernet (RJ45) according to IEEE 802.3at/bt (draft) supporting 60 Watt/interface with shared power budget from 120 Watt/module. With Conformal Coating	6GK6297-3PD00-4AB1
• **RUGGEDCOM RMM2973C-4PFC** Media Module for RUGGEDCOM RST2228, 4 x 10/100/1000 Mbps Power-over-Ethernet (FastConnect) according to IEEE 802.3at/bt (draft) supporting 60 Watt/interface with shared power budget from 120 Watt/module	6GK6297-3WD00-4AB1
• **RUGGEDCOM RMM2972C-4SFP** Media Module for RUGGEDCOM RST2228, 4 x SFP-slot, Supporting 100BASE-FX, 1000BASE-X SFPs, SFPs are not included. With Conformal Coating	6GK6297-2SA00-4AA1
• **RUGGEDCOM RMM2973MC-4SFP** Media Module for RUGGEDCOM RST2228, RST2228P to support IEEE 802.1AE MACsec functionality, 4 x SFP-slot, Supporting 100BASE-FX, 1000BASE-X SFPs, SFPs are not included. With Conformal Coating	6GK6297-2SM00-4AA1
• **RUGGEDCOM RMM2942C-4LC2** Media Module for RUGGEDCOM RST2228, 4 x 100 Mbps LC supporting multi-mode fiber optics up to 2km. With Conformal Coating	6GK6294-2LD00-4AC1
Blank modules	
• **RUGGEDCOM RMM2931-4** Blank Media Module for RUGGEDCOM RST2228	6GK6293-1BA00-4AA0

© Siemens AG 2024

Selection and ordering data (continued)

RUGGEDCOM accessories	
• **USB Console cable** USB 2.0 A type to B type Cable Assembly 10 feet / 3 meters	6GK6000-8DT01-0AA0
• **Power cable with lugs** Power Cable with north-american plug for screw terminal blocks (6 ft.) for RUGGEDCOM products	6GK6000-8BA00-0AA0
• **Power cable without lugs** Power Cable with north-american plug for pluggable terminal blocks (6 ft.) for RUGGEDCOM products	6GK6000-8BB00-0AA0
• **Pluggable terminal block RST2228** Connector Kit RST2228 Pluggable terminal blocks (1 set)	6GK6000-8HC05-0AA0
• **Screw terminal block RST2228** Connector Kit RST2228 Screw terminal blocks (1 set)	6GK6000-8HC06-0AA0
• **Rack / Panel Mounting Kit for RUGGEDCOM RST2228** Allows for mounting in a 19" rack or in a panel	6GK6000-8BB00-0AA0
• **RJ45 Dust Covers kit** RJ45 dust covers for RUGGEDCOM products, 8 pieces	6GK6000-8HT01-0CA0
• **SFP Dust Covers kit** SFP dust covers for RUGGEDCOM products, 12 pieces	6GK6000-8HT02-0CA0
RUGGEDCOM Storage Media	
• **RUGGEDCOM CLP 2GB** Storage media for simple device exchange in case of failure, for storage of configuration or user data with 2 GB capacity.	6GK6000-8RA00-1HA0
• **RUGGEDCOM CLP 2GB CC** Storage media for simple device exchange in case of failure, for storage of configuration or user data with 2 GB capacity and Conformal Coating.	6GK6000-8RA00-1HA1
RUGGEDCOM SFPs	
Copper Ethernet SFP	
• **RUGGEDCOM SFP1112-1** Copper SFP, 10/100/1000 Mbps RJ45-Interface, Copper, up to max. 100 m, 0...+70 °C	6GK6000-8CG01-0AA0
• **RUGGEDCOM SFP1112-1I** Copper SFP, 10/100/1000 Mbps RJ45-Interface, Copper, up to max. 100 m, -40...+85 °C. For use with ROS 5.4.0, ROX 2.13.2 and later versions.	6GK6000-8CG02-0AA0
Fiber Optic SFPs (Fast Ethernet)	
• **RUGGEDCOM SFP1121-1FX2** 100BASE-FX, LC-Interface, Optical: Multi Mode Fiber Optic up to max. 2 km, 1310 nm, -40...+85 °C	6GK6000-8FE51-0AA0

Selection and ordering data (continued)

• **RUGGEDCOM SFP1121-1FX2A** 100BASE-FX, LC-Interface, Optical: Multi Mode Fiber Optic up to max. 2 km, 1310 nm, -40...+85 °C	6GK6000-8FE50-0AA0
• **RUGGEDCOM SFP1131-1FX10A** 100BASE-LX, LC-Interface, Optical: Single-mode Fiber Optic up to max. 10 km, 1310 nm, -40...+85 °C. Only compatible with the RUGGEDCOM devices supporting active SFPs.	6GK6000-8FE60-0AA0
• **RUGGEDCOM SFP1131-1FX20** 100BASE-FX, LC-Interface, Optical: Single Mode Fiber Optic up to max. 20 km, 1310 nm, -40...+85 °C	6GK6000-8FE52-0AA0
• **RUGGEDCOM SFP1131S-1LX40A** 100BASE-LX, LC-Interface, Optical: Single-mode Fiber Optic up to max. 40 km, 1310 nm, -5...+70 °C. Only compatible with the RUGGEDCOM devices supporting active SFPs	6GK6000-8FE62-0AA0
• **RUGGEDCOM SFP1131-1XF50** 100BASE-FX, LC-Interface, Optical: Single Mode Fiber Optic up to max. 50 km, 1310 nm, -40...+85 °C	6GK6000-8FE53-0AA0
• **RUGGEDCOM SFP1131-1XF90** 100BASE-FX, LC-Interface, Optical: Single Mode Fiber Optic up to max. 90 km, 1550 nm, -40...+85 °C	6GK6000-8FE54-0AA0
Fiber Optic SFPs (Gigabit)	
• **RUGGEDCOM SFP1122-1SX** 1000BASE-SX, LC-Interface, Optical: Multi Mode Fiber Optic up to max. 500 m, 850 nm, -40...+85 °C	6GK6000-8FG51-0AA0
• **RUGGEDCOM SFP1122-1SX2** 1000BASE-SX, LC-Interface, Optical: Multi Mode Fiber Optic up to max. 2 km, 1310 nm, -40...+85 °C	6GK6000-8FE58-0AA0
• **RUGGEDCOM SFP1132-1LX10** 1000BASE-LX, LC-Interface, Optical: Single Mode Fiber Optic up to max. 10 km, 1310 nm, -40...+85 °C	6GK6000-8FG52-0AA0
• **RUGGEDCOM SFP1132-1LX25** 1000BASE-LX, LC-Interface, Optical: Single Mode Fiber Optic up to max. 25 km, 1310 nm, -40... +85 °C	6GK6000-8FG53-0AA0
• **RUGGEDCOM SFP1132-1LX40** 1000BASE-LX, LC-Interface, Optical: Single Mode Fiber Optic up to max. 40 km, 1550 nm, -40...+85 °C	6GK6000-8FG57-0AA0
• **RUGGEDCOM SFP1132-1LX70** 1000BASE-LX, LC-Interface, Optical: Single Mode Fiber Optic up to max. 70 km, 1550 nm, -40...+85 °C	6GK6000-8FG54-0AA0
• **RUGGEDCOM SFP1132-1LX115** 1000BASE-LX, LC-Interface, Optical: Single Mode Fiber Optic up to max. 115 km, 1550 nm, -10...+70 °C	6GK6000-8FE56-0AA0
Fiber Optic Bi-Directional SFPs (Gigabit)	

© Siemens AG 2024

Selection and ordering data (continued)

• **RUGGEDCOM SFP1132-1BX10R** 1000BASE-BX-U, LC-Interface, Optical: Single Mode Fiber Optic up to max. 10 km, 1310 nm TX/1490 nm RX, -40...+85 °C	**6GK6000-8FB51-0AA0**
• **RUGGEDCOM SFP1132-1BX10T** 1000BASE-BX-D, LC-Interface, Optical: Single Mode Fiber Optic up to max. 10 km, 1490 nm TX/1310 nm RX, -40...+85 °C	**6GK6000-8FB52-0AA0**
• **RUGGEDCOM SFP1132-1BX40R** 1000BASE-BX-U, LC-Interface, Optical: Single Mode Fiber Optic up to max. 40 km, 1310 nm TX/1490 nm RX, -40...+85 °C	**6GK6000-8FB53-0AA0**
• **RUGGEDCOM SFP1132-1BX40T** 1000BASE-BX-D, 1 X 1000 Mbps, LC-Interface, Optical: Single Mode Fiber Optic up to max. 40 km, 1490 nm TX/1310 nm RX, -40...+85 °C	**6GK6000-8FB54-0AA0**
Fiber Optic SFP+ (10 Gigabit)	
• **RUGGEDCOM SFP2123-1SR** 10GBASE-SR, LC- Interface, Optical: Multi Mode Fiber Optic up to max. 300 m, 850 nm, -40...+85 °C	**6GK6000-8FT50-0AA0**
• **RUGGEDCOM SFP2133-1LR10** 10GBASE-LR, LC- Interface, Optical: Single Mode Fiber Optic up to max. 10 km, 1310 nm, -40...+85 °C	**6GK6000-8FT51-0AA0**
• **RUGGEDCOM SFP2133-1ER40** 10GBASE-ER, LC- Interface, Optical: Single Mode Fiber Optic up to max. 40 km, 1550 nm, -40...+85 °C	**6GK6000-8FT53-0AA0**
• **RUGGEDCOM SFP2133-1ZR80** 10GBASE-ZR, LC- Interface, Optical: Single Mode Fiber Optic up to max. 80 km, 1550 nm, -40...+85 °C	**6GK6000-8FT52-0AA0**

More information

To assist in selecting the right RUGGEDCOM products as well as configuration of variants, the RUGGEDCOM Selector is available at:

http://www.siemens.com/ruggedcom-selector

© Siemens AG 2024

Overview

The SCALANCE XC-300 product line comprises compact Industrial Ethernet switches for installation in control cabinets for constructing electrical and/or optical line, ring and star topologies operating at data transfer rates up to 10 Gbps.

Product variants

SCALANCE XC332

- With 32x RJ45 ports 10/100/1000 Mbps, for mounting in control cabinet

SCALANCE XC324-4

- With 24x RJ45 ports 10/100/1000 Mbps and 4x SFP ports 1/10 Gbps

SCALANCE XC324-4EEC

- With 24x RJ45 ports 10/100/1000 Mbps and 4x SFP ports 1/10 Gbps, conformal coating

SCALANCE XC319-4

- With 16x RJ45 ports 10/100/1000 Mbps, 4x SFP ports 1/10 Gbps and 3x RJ45 ports 1/2.5/5/10 Gbps

SCALANCE XC316-8

- With 16x RJ45 ports 10/100/1000 Mbps and 8x SFP ports 1/10 Gbps

Benefits

get Designed for Industry

- Operational reliability in industrial environments, e.g. due to robust enclosure, redundancy, extended temperature range from -40 °C to +60 °C
- Increased plant availability thanks to:
  - Redundant power supply
  - Redundant network structures based on a wide range of protocols
- Easy monitoring and diagnostics due to separate diagnostics station with integrated LEDs, signaling contact, web browser, traps and email transmission
- Integration into the SINEC NMS Network Management System for integrated network diagnostics with central firmware management
- Reduced engineering workload for PLC/HMI due to integration into the SIMATIC system error message concept
- Time savings during engineering, commissioning and in the operating phase of a plant by using the integrated configuration and diagnostics in TIA Portal
- Easy integration in process and system diagnostics with PROFINET or EtherNet/IP
- Integration of SCALANCE XC-300 switches in existing network management systems, such as SINEC NMS, through SNMP access
- Reliable plug-in connection thanks to rugged, industry-standard device connection in conjunction with industry-standard FastConnect connectors
- Low-maintenance operation thanks to fanless construction

© Siemens AG 2024

Application

The main area of application is in high-performance plant networks (aggregation/control level) where a high number of ports and high transfer rate are necessary in addition to high requirements on the availability of the network and comprehensive diagnostics options.

The switch handles the Layer 2 networking of plant units as well as distributed field devices.

Other properties that support the application target include:

- One industrial network for data, voice, video and PROFINET
- Integrated system diagnostics possible with PROFINET, SINEC NMS, Syslog, SNMP and web browser
- Use in the SIMATIC environment
- Virtual networks (VLAN) allow simple division of large networks into smaller subnetworks with their own address space. Reasons for subdivision into subnetworks include separation of the Ethernet networks to reduce the broadcast load, separation of sensitive areas from the main network, and subdivision of the network into logical working groups.
- Integrated security functions offer protection against unauthorized network access and configuration; see technical specifications

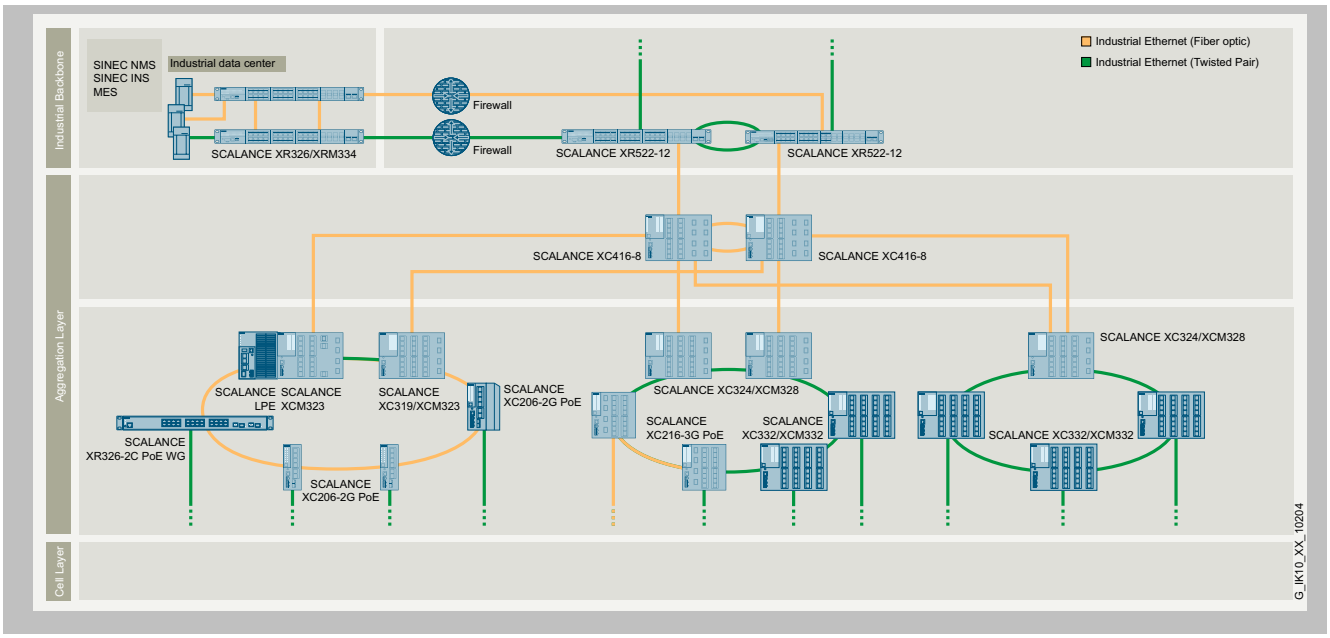

High availability through network segmentation and redundancy mechanisms

© Siemens AG 2024

Application (continued)

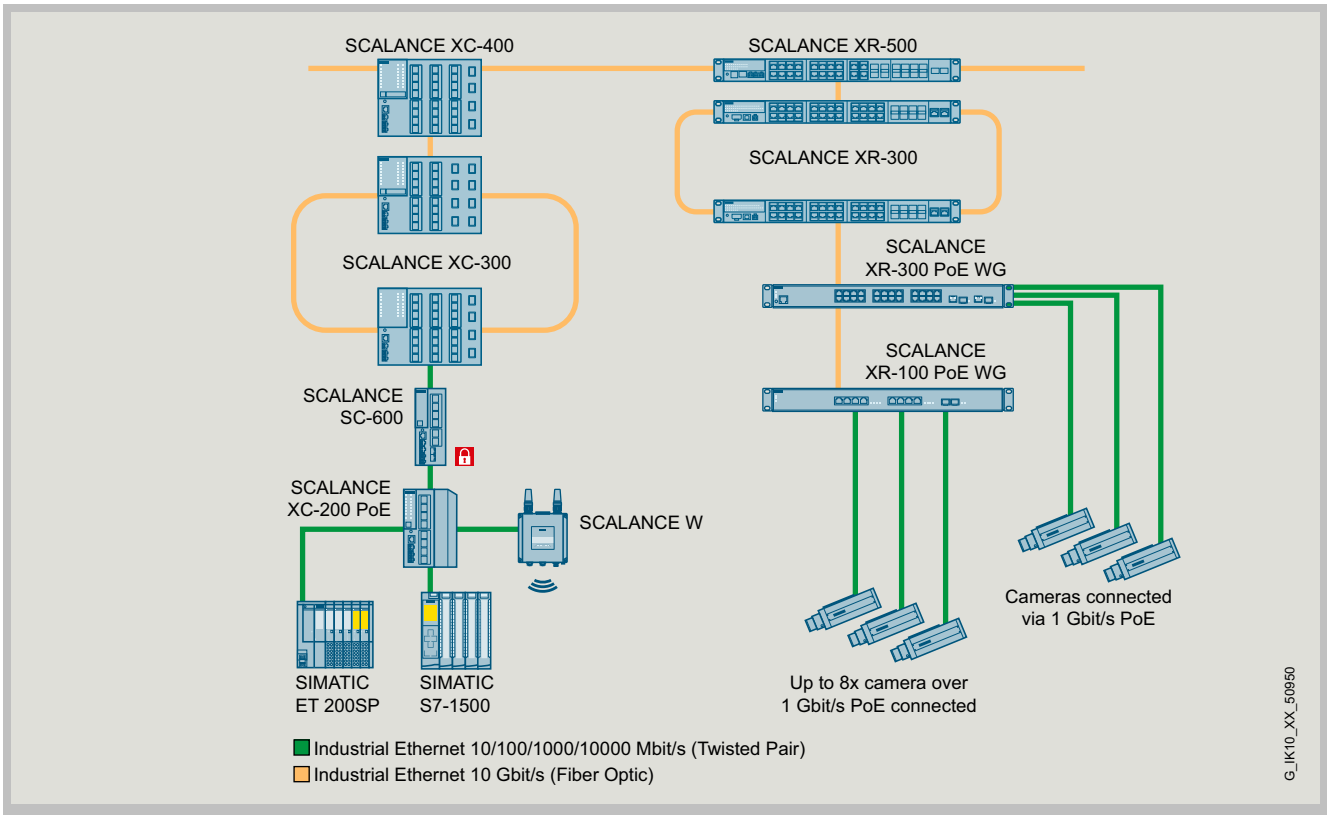

Implementation of the connection of a large number of nodes and high data throughput over long distances

© Siemens AG 2024

Design

The SCALANCE XC-300 Industrial Ethernet switches with a rugged enclosure are optimized for mounting on DIN rails and SIMATIC S7-1500 mounting rails. Direct wall mounting in various positions and mounting on a SIMATIC S7-300 mounting rail are also possible. Due to the SIMATIC S7-1500 enclosure dimensions, the devices are optimally suited for integration into an automation solution with SIMATIC S7-1500 components.

The network access points with degree of protection IP20 feature:

- A 2x 2-pin terminal block (push-in) for connecting the redundant supply voltage (2 x 24 V DC)
- The following status information is displayed on site by LEDs:
  - Port status
  - Port mode (e.g. 10/100/1000 Mbps, full/half-duplex)
  - Status of the two power supplies
  - Signaling contact status
  - Signal mask (setpoint status)
- A 2-pin terminal block (push-in) for connecting the floating signaling contact
- A SELECT/SET button for on-site configuration of the signaling contact
- Variant with coated PCBs (conformal coating)

The SCALANCE XC-300 switches are available with the following port types:

10/100/1000 Mbps, RJ45 connection

- Automatic detection of data transmission rate (10, 100 or 1000 Mbps), with autosensing and autocrossover function for connecting IE FC cables via IE FC RJ45 plugs over distances up to 100 m.

1/2.5/5/10 Gbps, RJ45 connection

- Automatic detection of data transmission rate (1000, 2500, 5000 or 10000 Mbps), with autosensing and autocrossover function for connecting IE FC cables via IE FC RJ45 plugs over distances up to 100

1/10 Gbps, SFP+ connector

- Use of 1000 Mbps or 10000 Mbps SFP+ transceiver for multimode or single-mode transceivers

Function

- Setup of electrical and optical Industrial Ethernet line, star and ring topologies
  - Use in ring topologies together with SCALANCE X-200, SCALANCE X-300, SCALANCE X-400 and XR-500
- Uncrossed connecting cables can be used due to autocrossover function integrated in the ports
- Easy diagnostics using signaling contact, SNMP and web browser
- Easy copper cable diagnostics via web browser for localizing cable breaks
- Integration into the diagnostics of a PROFINET controller with expanded diagnostics functions for a consistent diagnostics concept, including network infrastructure
- Diagnostics of data traffic by means of a parameterizable mirror port with a standard commercial network analyzer
- Optimized support of PROFINET real-time communication (RT) through prioritizing
- Fast device replacement in the event of a fault by using the optional C-PLUG removable data storage medium (not included in scope of supply)
- Redundant connection to company networks

  The SCALANCE XC-300 switches support the standardized redundancy procedures Spanning Tree Protocol (STP) and Rapid Spanning Tree Protocol (RSTP). This enables a subnetwork to be connected redundantly to a higher level corporate network with reduced requirements for the reconfiguration time (in the seconds range)
- Support of virtual LANs (VLAN)

  For structuring Industrial Ethernet networks with a fast growing number of nodes, a physically existing network can be divided into several logical networks
- Load limiting with use of multicast protocols (e.g. querier, video)

  By learning the multicast sources and targets (IGMP snooping), XC-300 switches can also filter multicast data traffic, thus limiting the load in the network. Multicast and broadcast traffic can be limited.

Network topology and network configuration

The SCALANCE XC-300 Industrial Ethernet switches with degree of protection IP20 are usually installed in a control cabinet together with the stations to be connected. Electrical and optical versions can be installed together in star, line and ring topologies.

When configuring the network, the following boundary conditions must be observed:

- Maximum cable length for twisted pair:
  - Max. 100 m with Industrial Ethernet FC cable and Industrial Ethernet FC plugs
  - Max. 10 m using patches with TP cord
- IP address:

  The IP address can be assigned by means of the DHCP (Dynamic Host Configuration Protocol). If there is no corresponding server in the network, the IP address can be assigned using the supplied software tool SINEC PNI (Primary Network Initialization) or STEP 7 / TIA Portal. Assignment via the local console port is also possible.

Commissioning and diagnostics

PROFINET diagnostic interrupts from SCALANCE XC-300 switches can be displayed with the appropriate SIMATIC engineering tools and processed in the PLC with an expanded diagnostics function. The engineering outlay for the PLC and HMI have been drastically

© Siemens AG 2024

Function (continued)

reduced due to the complete integration in the SIMATIC concept for system error messages.
SCALANCE XC-300 Industrial Ethernet switches can also be integrated in a network management system such as SINEC NMS using the standardized Simple Network Management Protocol (SNMP). In the event of faults in the device, error messages (SNMP traps) can be sent to a network management system such as SINEC NMS or as an email to a specified network administrator.
The integrated web server enables configuration and diagnostics settings to be made using a standard web browser (e.g. port configuration). Statistical information can also be read out over the web server (e.g. port capacity utilization).

The following information is displayed on site by LEDs:

- Power
- Port status
- Data traffic
- Signaling contact
- Redundancy manager function (RM)

The Industrial Ethernet switches of the SCALANCE XC-300 line can also be monitored using the floating signaling contact.

Selection and ordering data

	Article No.
SCALANCE XC-300 Industrial Ethernet switches Industrial Ethernet switches with integral SNMP access, web diagnostics, copper cable diagnostics, and PROFINET diagnostics for configuring line, star and ring topologies; with integrated redundancy manager	
• **SCALANCE XC332** with 32x RJ45 ports 10/100/1000 Mbps	6GK5332-0GA00-2AC2
• **SCALANCE XC324-4** with 24x RJ45 ports 10/100/1000 Mbps and 4x SFP+ ports 1/10 Gbps	6GK5328-4TS00-2AC2
• **SCALANCE XC324-4EEC** with 24x RJ45 ports 10/100/1000 Mbps and 4x SFP+ ports 1/10 Gbps; conformal coating	6GK5328-4TS00-2EC2
• **SCALANCE XC319-4** with 16x RJ45 ports 10/100/1000 Mbps, 4x SFP+ ports 1/10 Gbps and 3x RJ45 ports 1/2.5/5/10 Gbps	6GK5323-4TS00-2AC2
• **SCALANCE XC316-8** with16x RJ45 ports 10/100/1000 Mbps and 8x SFP+ ports 1/10 Gbps	6GK5324-8TS00-2AC2

Accessories

	Article No.
S7-1500 PM 1507 power supply SIMATIC PM 1507 24 V/8 A Stabilized power supply for SIMATIC S7-1500 Input: 120/230 V AC Output: 24 V DC/8 A	6EP1333-4BA00
SITOP PSU100E power supply Stabilized power supply Input: 120/230 V AC Output: 48 V DC/5 A	6EP3344-0SB00-0AY0
IE FC RJ45 plug 4 x 2 RJ45 plug-in data connector (10/100/1000 Mbps), for connection to IE FC TP cables 4x2, with a rugged metal enclosure and FastConnect connection technology	6GK1901-1BB12-2AA0
IE FC TP standard cable GP 4 x 2 TP installation cable Cat6 for connection to IE FC RJ45 plug 4x2, AWG24 ***Sold by the meter;*** Max. delivery unit 1000 m, minimum order quantity 20 m, also available pre-assembled with RJ45 plugs in various lengths	6XV1878-2A
IE connecting cable SFP+/SFP+ Pre-assembled IE connecting cable with two SFP-plus connectors Length:	
• 1 m	6GK5980-3CB00-0AA1
• 2 m	6GK5980-3CB00-0AA2
• 7 m	6GK5980-3CB00-0AA7
SCALANCE TAP104 Test access port for the reaction-free extraction of Ethernet data frames (10/100 Mbps) from both transmission directions; extracts complete data traffic, including faulty frames, for further diagnostics.	6GK5104-0BA00-1SA2

© Siemens AG 2024

Technical specifications

Article number	6GK5332-0GA00-2A-C2	6GK5328-4TS00-2A-C2	6GK5328-4TS00-2E-C2	6GK5324-8TS00-2A-C2	6GK5323-4TS00-2A-C2
product type designation					
product brand name	SCALANCE	SCALANCE	SCALANCE	SCALANCE	
transfer rate					
transfer rate	10 Mbit/s, 100 Mbit/s, 1 000 Mbit/s	10 Mbit/s, 100 Mbit/s, 1 000 Mbit/s, 10 Gbit/s	10 Mbit/s, 100 Mbit/s, 1 000 Mbit/s, 10 Gbit/s	10 Mbit/s, 100 Mbit/s, 1 000 Mbit/s, 10 Gbit/s	
interfaces for communication integrated					
number of electrical connections					
• for network components or terminal equipment	32; RJ45	24; RJ45	24; RJ45	16; RJ45	
number of 10/100/1000 Mbit/s RJ45 ports					
• with securing collar	32	24	24	16	
number of electrical connections					
• for SFP+		4; 1000 Mbps and 10000 Mbps SFP usable	4; 1000 Mbps and 10000 Mbps SFP usable	8; 1000 Mbps and 10000 Mbps SFP usable	
interfaces other					
number of electrical connections					
• for operator console	1	1	1	1	
• for signaling contact	1	1	1	1	
• for power supply	1	1	1	1	
type of electrical connection					
• for operator console	USB (2.0 Port, Type B, serial via USB)	USB (2.0 Port, Type B, serial via USB)	USB (2.0 Port, Type B, serial via USB)	USB (2.0 Port, Type B, serial via USB)	
• for signaling contact	2-pole terminal block	2-pole terminal block	2-pole terminal block	2-pole terminal block	
• for power supply	2 x 2-pin terminal block	2 x 2-pin terminal block	2 x 2-pin terminal block	2 x 2-pin terminal block	
design of the removable storage					
• CLP	Yes	Yes	Yes	Yes	
operating voltage of the signaling contacts					
• at DC rated value	24 V	24 V	24 V	24 V	
operational current of the signaling contacts					
• at DC maximum	0.1 A	0.1 A	0.1 A	0.1 A	
supply voltage, current consumption, power loss					
product component connection for redundant voltage supply	Yes	Yes	Yes	Yes	
type of voltage 1 of the supply voltage	DC	DC	DC	DC	
• supply voltage 1 rated value	24 V	24 V	24 V	24 V	
• power loss [W] 1 rated value	43.2 W	43.2 W	43.2 W	43.2 W	
• supply voltage 1 rated value	19.2 ... 28.8 V	19.2 ... 28.8 V	19.2 ... 28.8 V	19.2 ... 28.8 V	
• consumed current 1 maximum	1.8 A	1.8 A	1.8 A	1.8 A	
• type of electrical connection 1 for power supply	2 x 2-pole terminal block	2 x 2-pole terminal block	2 x 2-pole terminal block	2 x 2-pole terminal block	
• product component 1 fusing at power supply input	Yes	Yes	Yes	Yes	
• fuse protection type 1 at input for supply voltage	F 10 A / 250V	F 10 A / 250V	F 10 A / 250V	F 10 A / 250V	
ambient conditions					
ambient temperature					
• during operation	-40 ... +60 °C	-40 ... +60 °C	-40 ... +60 °C	-40 ... +60 °C	

© Siemens AG 2024

Technical specifications (continued)

Article number	6GK5332-0GA00-2A-C2	6GK5328-4TS00-2A-C2	6GK5328-4TS00-2E-C2	6GK5324-8TS00-2A-C2	6GK5323-4TS00-2A-C2
• during storage	-40 ... +85 °C	-40 ... +85 °C	-40 ... +85 °C	-40 ... +85 °C	
• during transport	-40 ... +85 °C	-40 ... +85 °C	-40 ... +85 °C	-40 ... +85 °C	
relative humidity					
• at 25 °C without condensation during operation maximum	95 %	95 %	95 %	95 %	
operating condition fanless operation	Yes	Yes	Yes	Yes	
protection class IP	IP20	IP20	IP20	IP20	
design, dimensions and weights					
design	compact	compact	compact	compact	
width	210 mm	210 mm	210 mm	210 mm	
height	147 mm	147 mm	147 mm	147 mm	
depth	125 mm	125 mm	125 mm	125 mm	
net weight	2.04 kg	1.9 kg	1.9 kg	1.8 kg	
fastening method					
• 19-inch installation	No	No	No	No	
• 35 mm top hat DIN rail mounting	Yes	Yes	Yes	Yes	
• wall mounting	Yes	Yes	Yes	Yes	
• S7-300 rail mounting	Yes	Yes	Yes	Yes	
• S7-1500 rail mounting	Yes	Yes	Yes	Yes	
product features, product functions, product components general					
cascading in the case of a redundant ring at reconfiguration time of <\~0.3\~s	50	50	50	50	
number of automatically learnable MAC addresses	16 382	16 382	16 382	16 382	
number of QoS queues per port	8	8	8	8	
product function					
• QoS according to IEEE 802.1Q	Yes	Yes	Yes	Yes	
product feature					
• Store & Forward switching method	Yes	Yes	Yes	Yes	
product functions management, configuration, engineering					
product function					
• CLI	Yes	Yes	Yes	Yes	
• web-based management	Yes	Yes	Yes	Yes	
• MIB support	Yes	Yes	Yes	Yes	
• TRAPs via email	Yes	Yes	Yes	Yes	
• configuration with STEP 7	Yes	Yes	Yes	Yes	
• RMON	Yes	Yes	Yes	Yes	
• port mirroring	Yes	Yes	Yes	Yes	
• multiport mirroring	Yes	Yes	Yes	Yes	
• CoS	Yes	Yes	Yes	Yes	
• PROFINET IO diagnosis	Yes	Yes	Yes	Yes	
• switch-managed	Yes	Yes	Yes	Yes	
PROFINET conformity class	B	B	B	B	
network load class according to PROFINET	3	3	3	3	
telegram length for Ethernet maximum	2 048 byte	2 048 byte	2 048 byte	2 048 byte	
protocol is supported					
• Telnet	Yes	Yes	Yes	Yes	

© Siemens AG 2024

Technical specifications (continued)

Article number	6GK5332-0GA00-2A-C2	6GK5328-4TS00-2A-C2	6GK5328-4TS00-2E-C2	6GK5324-8TS00-2A-C2	6GK5323-4TS00-2A-C2
• HTTP	Yes	Yes	Yes	Yes	
• HTTPS	Yes	Yes	Yes	Yes	
• TFTP	Yes	Yes	Yes	Yes	
• FTP	Yes	Yes	Yes	Yes	
• SFTP	Yes	Yes	Yes	Yes	
• BOOTP	No	No	No	No	
• NETCONF	Yes	Yes	Yes	Yes	
• GMRP	Yes	Yes	Yes	Yes	
• DCP	Yes	Yes	Yes	Yes	
• LLDP	Yes	Yes	Yes	Yes	
• EtherNet/IP	Yes	Yes	Yes	Yes	
• SNMP v1	Yes	Yes	Yes	Yes	
• SNMP v2	Yes	Yes	Yes	Yes	
• SNMP v3	Yes	Yes	Yes	Yes	
• IGMP (snooping/querier)	Yes	Yes	Yes	Yes	
identification & maintenance function					
• I&M0 - device-specific information	Yes	Yes	Yes	Yes	
• I&M1 - higher level designation/location designation	Yes	Yes	Yes	Yes	
product functions diagnostics					
product function					
• port diagnostics	Yes	Yes	Yes	Yes	
• statistics Packet Size	Yes	Yes	Yes	Yes	
• statistics packet type	Yes	Yes	Yes	Yes	
• error statistics	Yes	Yes	Yes	Yes	
• SysLog	Yes	Yes	Yes	Yes	
product functions VLAN					
product function					
• VLAN - port based	Yes	Yes	Yes	Yes	
• VLAN - protocol-based	No	No	No	No	
• VLAN - IP-based	No	No	No	No	
• VLAN dynamic	Yes	Yes	Yes	Yes	
number of VLANs maximum	257	257	257	257	
number of VLANs - dynamic maximum	257	257	257	257	
number of VLANs at ring redundancy (HRP; MRP; standby link)	257	257	257	257	
product functions DHCP					
product function					
• DHCP server	Yes	Yes	Yes	Yes	
• DHCP client	Yes	Yes	Yes	Yes	
• DHCP Option 82	Yes	Yes	Yes	Yes	
• DHCP Option 66	Yes	Yes	Yes	Yes	
• DHCP Option 67	Yes	Yes	Yes	Yes	
product functions redundancy					
protocol is supported Media Redundancy Protocol (MRP)	Yes	Yes	Yes	Yes	
product function					

© Siemens AG 2024

Technical specifications (continued)

Article number	6GK5332-0GA00-2A-C2	6GK5328-4TS00-2A-C2	6GK5328-4TS00-2E-C2	6GK5324-8TS00-2A-C2	6GK5323-4TS00-2A-C2
• media redundancy protocol (MRP) with redundancy manager	Yes	Yes	Yes	Yes	
• Media Redundancy Protocol Interconnection (MRP-I)	Yes	Yes	Yes	Yes	
• of the PROFINET IO device is supported H-Sync forwarding	Yes	Yes	Yes	Yes	
• of the PROFINET IO device is supported PROFINET system redundancy	Yes	Yes	Yes	Yes	
• ring redundancy	Yes	Yes	Yes	Yes	
• high speed redundancy protocol (HRP) with redundancy manager	Yes	Yes	Yes	Yes	
• high speed redundancy protocol (HRP) with standby redundancy	Yes	Yes	Yes	Yes	
• redundancy procedure STP	Yes	Yes	Yes	Yes	
• redundancy procedure RSTP	Yes	Yes	Yes	Yes	
• redundancy procedure RSTP+	Yes	Yes	Yes	Yes	
• redundancy procedure MSTP	Yes	Yes	Yes	Yes	
• High-availability Seamless Redundancy (HSR)	Yes	Yes	Yes	Yes	
• Parallel Redundancy Protocol (PRP)/operation in the PRP-network	Yes	Yes	Yes	Yes	
• Parallel Redundancy Protocol (PRP)/Redundant Network Access (RNA)	Yes	Yes	Yes	Yes	
• passive listening	Yes	Yes	Yes	Yes	
• eRSTP	Yes	Yes	Yes	Yes	
protocol is supported					
• STP/RSTP	Yes	Yes	Yes	Yes	
• STP	Yes	Yes	Yes	Yes	
• RSTP	Yes	Yes	Yes	Yes	
• MSTP	No	No	No	No	
• RSTP big network support	Yes	Yes	Yes	Yes	
• LACP	Yes	Yes	Yes	Yes	
system modification during operation					
product function configuration in RUN via CiR/H-CiR	Yes	Yes	Yes	Yes	
product functions security					
product function					
• IEEE 802.1x (radius)	Yes	Yes	Yes	Yes	
• broadcast/multicast/unicast limiter	Yes	Yes	Yes	Yes	
• broadcast blocking	Yes	Yes	Yes	Yes	
protocol is supported					
• SSH	Yes	Yes	Yes	Yes	
• SSL	Yes	Yes	Yes	Yes	
product functions time					
product function					
• SICLOCK support	Yes	Yes	Yes	Yes	
• NTP-client	Yes	Yes	Yes	Yes	
• SNTP client	Yes	Yes	Yes	Yes	
• IEEE 1588 v2 transparent forwarding	Yes	Yes	Yes	Yes	

© Siemens AG 2024

Technical specifications (continued)

Article number	6GK5332-0GA00-2A-C2	6GK5328-4TS00-2A-C2	6GK5328-4TS00-2E-C2	6GK5324-8TS00-2A-C2	6GK5323-4TS00-2A-C2
protocol is supported					
• NTP	Yes	Yes	Yes	Yes	
• SNTP	Yes	Yes	Yes	Yes	
• IEEE 1588 profile default	No	No	No	No	
accuracy at IEEE 1588 v2					
• not less than	100 µs	100 µs	100 µs	100 µs	
• typical	50 ns	50 ns	50 ns	50 ns	
standards, specifications, approvals					
certificate of suitability					
• CE marking	Yes	Yes	Yes	Yes	
• cULus approval	Yes	Yes	Yes	Yes	Yes
• Regulatory Compliance Mark (RCM)	Yes	Yes	Yes	Yes	
product conformity according to EMC-guideline	2014/30/EU	2014/30/EU	2014/30/EU	2014/30/EU	
standard					
• for EMC interference emission	EN 61000-6-4, Railway (trackside) available soon	EN 61000-6-4, Railway (trackside) available soon	EN 61000-6-4, Railway (trackside) available soon	EN 61000-6-4, Railway (trackside) available soon	
• for immunity to EMC	EN 61000-6-2, Railway (trackside) available soon	EN 61000-6-2, Railway (trackside) available soon	EN 61000-6-2, Railway (trackside) available soon	EN 61000-6-2, Railway (trackside) available soon	
• for safety from CSA and UL	UL 60950-1 E115352, UL-61010-2 E85972	UL 60950-1 E115352, UL-61010-2 E85972	UL 60950-1 E115352, UL-61010-2 E85972	UL 60950-1 E115352, UL-61010-2 E85972	
standards, specifications, approvals hazardous environments					
certificate of suitability					
• ATEX	Yes	Yes	Yes	Yes	Yes
• UKEX	Yes	Yes	Yes	Yes	Yes
• IECEx	Yes	Yes	Yes	Yes	Yes
• ULhazloc approval	Yes	Yes	Yes	Yes	Yes
• CCC for hazardous zone according to GB standard	Yes	Yes	Yes	Yes	Yes
• FM registration	Yes	Yes	Yes	Yes	Yes
standards, specifications, approvals other					
IT security for industrial automation systems according to IEC 62443-4-2:2019	Yes	Yes	Yes	Yes	
standards, specifications, approvals Environmental Product Declaration					
Environmental Product Declaration	Yes	Yes	Yes	Yes	
Global Warming Potential [CO2 eq]					
• total	1 244.3 kg	1 244.3 kg	1 244.3 kg	1 244.3 kg	
• during manufacturing	122.74 kg	122.74 kg	122.74 kg	122.74 kg	
• during operation	1 120.64 kg	1 120.64 kg	1 120.64 kg	1 120.64 kg	
• after end of life	0.91 kg	0.91 kg	0.91 kg	0.91 kg	
product functions general					
MTBF	11.6 a	15.6 a	15.6 a	13.4 a	
reference code					
• according to IEC 81346-2	KF	KF	KF	KF	KF
• according to IEC 81346-2:2019	KFE	KFE	KFE	KFE	KFE
Warranty period	5 a	5 a	5 a	5 a	

© Siemens AG 2024

Technical specifications (continued)

Article number	6GK5332-0GA00-2A-C2	6GK5328-4TS00-2A-C2	6GK5328-4TS00-2E-C2	6GK5324-8TS00-2A-C2	6GK5323-4TS00-2A-C2
further information internet links					
internet link					
• to website: Selection guide for cables and connectors	https://support.industry.siemens.com/cs/ww/en/view/109766358	https://support.industry.siemens.com/cs/ww/en/view/109766358	https://support.industry.siemens.com/cs/ww/en/view/109766358	https://support.industry.siemens.com/cs/ww/en/view/109766358	https://support.industry.siemens.com/cs/ww/en/view/109766358
• to web page: selection aid TIA Selection Tool	https://www.siemens.com/tstcloud	https://www.siemens.com/tstcloud	https://www.siemens.com/tstcloud	https://www.siemens.com/tstcloud	https://www.siemens.com/tstcloud
• to website: Industrial communication	https://www.siemens.com/simatic-net	https://www.siemens.com/simatic-net	https://www.siemens.com/simatic-net	https://www.siemens.com/simatic-net	https://www.siemens.com/simatic-net
• to web page: SiePortal	https://sieportal.siemens.com/	https://sieportal.siemens.com/	https://sieportal.siemens.com/	https://sieportal.siemens.com/	https://sieportal.siemens.com/
• to website: Image database	https://www.automation.siemens.com/bilddb	https://www.automation.siemens.com/bilddb	https://www.automation.siemens.com/bilddb	https://www.automation.siemens.com/bilddb	https://www.automation.siemens.com/bilddb
• to website: CAx-Download-Manager	https://www.siemens.com/cax	https://www.siemens.com/cax	https://www.siemens.com/cax	https://www.siemens.com/cax	https://www.siemens.com/cax
• to website: Industry Online Support	https://support.industry.siemens.com	https://support.industry.siemens.com	https://support.industry.siemens.com	https://support.industry.siemens.com	https://support.industry.siemens.com

More information

Selection Tool:

To support the selection of SCALANCE network components, the TIA Selection Tool is available at:

www.siemens.com/tst

Ordering overview:

You can find more information on the FastConnect range in the "Cabling technology for communication networks in industry" ordering overview.

© Siemens AG 2024

Overview

The SCALANCE XR-300 product line comprises 19" Industrial Ethernet switches for constructing electrical and/or optical line, ring and star topologies
with data transfer rates up to 10 Gbps.

The two product lines XR-300/XRM-300 are identical in design and only differ with respect to the operating system used.
The SCALANCE XR-300 product line uses the tried-and-tested XC-200 operating system with its familiar look and feel.

The SCALANCE XRM-300 product line relies on a new operating system on which future functionalities such as PN over TSN can be implemented.

Product versions

SCALANCE XR326-8

- 24 × RJ45 ports 10/100/1000 Mbps, 2 × RJ45 ports 1/2.5/5/10 Gbps, 8 × SFP+ port 1/10 Gbps, 24 V AC/DC
- 24 × RJ45 ports 10/100/1000 Mbps, 2 × RJ45 ports 1/2.5/5/10 Gbps, 8 × SFP+ port 1/10 Gbps, 1 × 100 to 240 V AC / 110 to 250 V DC
- 24 × RJ45 ports 10/100/1000 Mbps, 2 × RJ45 ports 1/2.5/5/10 Gbps, 8 × SFP+ port 1/10 Gbps, 2 × 100 to 240 V AC / 110 to 250 V DC

SCALANCE XR322-12

- 20 × RJ45 ports 10/100/1000 Mbps, 2 × RJ45 ports 1/2.5/5/10 Gbps, 4 × SFP port 100/1000 Mbps, 8 × SFP+ port 1/10 Gbps, 24 V AC/DC
- 20 × RJ45 ports 10/100/1000 Mbps, 2 × RJ45 ports 1/2.5/5/10 Gbps, 4 × SFP port 100/1000 Mbps, 8 x SFP+ port 1/10 Gbps, 1 × 100 to 240 V AC / 110 to 250 V DC
- 20 × RJ45 ports 10/100/1000 Mbps, 2 × RJ45 ports 1/2.5/5/10 Gbps, 4 × SFP port 100/1000 Mbps, 8 x SFP+ port 1/10 Gbps, 2 × 100 to 240 V AC / 110 to 250 V DC

SCALANCE XR302-32

- 24 × SFP port 100/1000 Mbps, 2 × RJ45 ports 1/2.5/5/10 Gbps, 8 × SFP+ port 1/10 Gbps, 24 V AC/DC
- 24 × SFP port 100/1000 Mbps, 2 × RJ45 ports 1/2.5/5/10 Gbps, 8 x SFP+ port 1/10 Gbps, 1 × 100 to 240 V AC / 110 to 250 V DC
- 24 × SFP port 100/1000 Mbps, 2 × RJ45 ports 1/2.5/5/10 Gbps, 8 x SFP+ port 1/10 Gbps, 2 × 100 to 240 V AC / 110 to 250 V DC

SCALANCE XR326-8EEC

- 24 × RJ45 ports 10/100/1000 Mbps, 2 × RJ45 ports 1/2.5/5/10 Gbps, 8 × SFP+ port 1/10 Gbps, conformal coating, 24 V AC/DC

Benefits

get Designed for Industry

- Operational reliability in industrial environments, e.g. due to rugged enclosure, redundancy, extended temperature range from -40 °C to +60 °C
- Increased plant availability thanks to:
  - Redundant power supply (24 V AC/DC) / redundant power supply units (100 to 240 V AC / 110 to 250 V DC)
  - Redundant network structures based on a wide range of protocols
- Easy monitoring and diagnostics due to separate diagnostics station with integrated LEDs, signaling contact, web browser, traps and email transmission
- Reduced engineering workload for PLC/HMI due to integration into the SIMATIC system error message concept
- Time savings during engineering, commissioning and in the operating phase of a plant by using the integrated configuration and diagnostics in TIA Portal
- Easy integration in process and system diagnostics with PROFINET or EtherNet/IP
- Integration of SCALANCE XR-300 switches in existing network management systems, such as SINEC NMS, through SNMP access
- Reliable plug-in connection thanks to rugged, industry-standard device connection in conjunction with industry-standard FastConnect connectors
- Low-maintenance operation thanks to fanless construction

© Siemens AG 2024

Application

The main area of application is in high-performance plant networks (aggregation/control level) where a high number of ports and high transfer rates are necessary
in addition to high requirements on the availability of the network and comprehensive diagnostics options.

The switch handles the Layer 2 networking of plant units as well as distributed field devices.

Other properties that support the application target include:

- One industrial network for data, voice, video and PROFINET
- Integrated system diagnostics possible with PROFINET, SINEC NMS, Syslog, SNMP and web browser
- Use in the SIMATIC environment
- Virtual networks (VLAN) allow simple division of large networks into smaller subnetworks with their own address space.

  Reasons for division into subnetworks include separation of the Ethernet networks to reduce the broadcast load, separation of sensitive

  areas from the main network, and division of the network into logical working groups
- Integrated security functions offer protection against unauthorized network access and configuration; see technical specifications

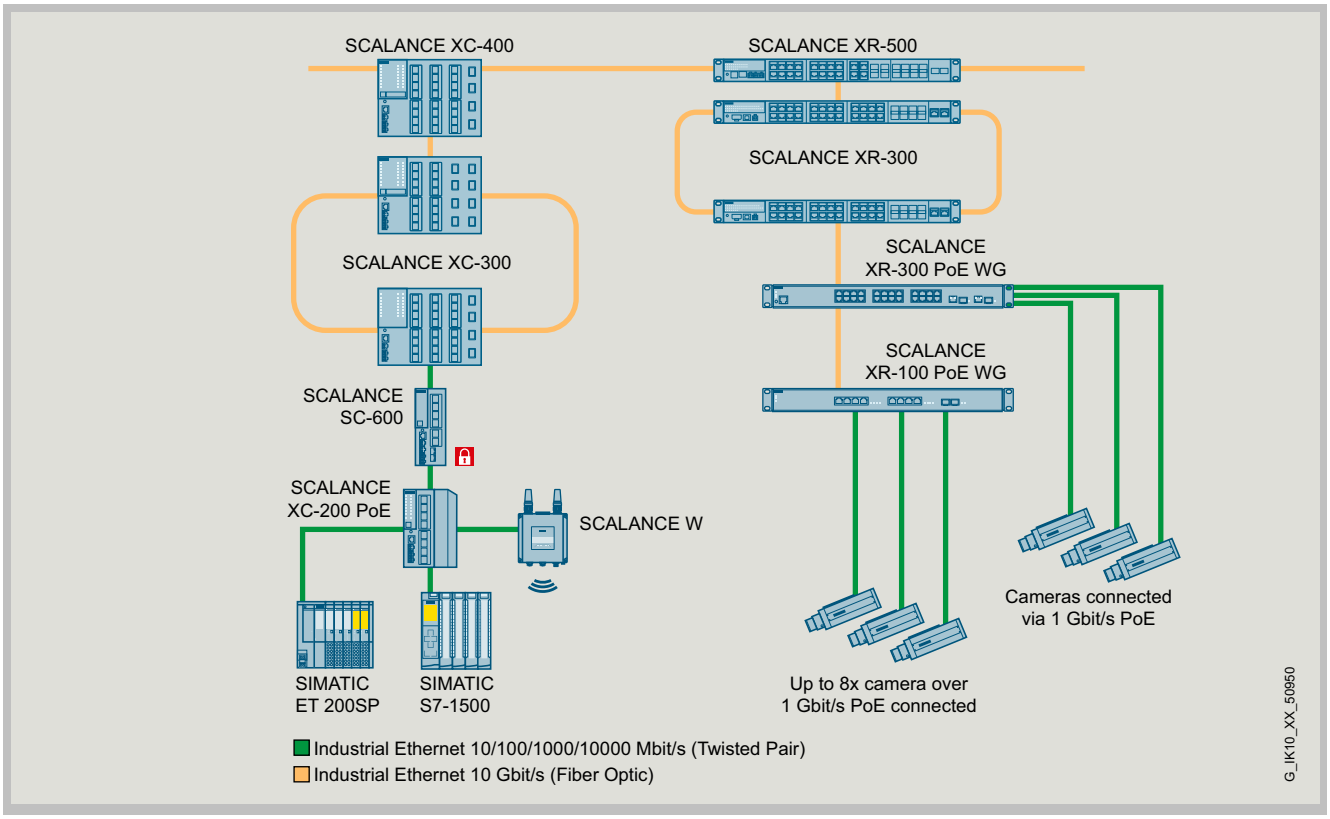

© Siemens AG 2024

Design

The SCALANCE XR-300 Industrial Ethernet switches with a rugged enclosure are optimized for mounting in the 19" control cabinet.

The network access points with degree of protection IP20 feature:

- A 2 x 2-pin terminal block (push-in) for connecting the redundant supply voltage (2 × 24 V AC/DC) for 24 V DC device variants or

  integrated power supply units (100 to 240 V AC / 110 to 250 V DC) with IEC connector/terminal block
- The following status information is displayed on site by LEDs:
  - Port status
  - Port mode (e.g. 10/100/1000 Mbps, full/half-duplex)
  - Status of the two power supplies
  - Signaling contact status
  - Signal mask (setpoint status)
- A 2-pin terminal block (push-in) for connecting the floating signaling contact
- A SELECT/SET button for on-site configuration of the signaling contact
- Variant with coated circuit boards (conformal coating, XR-300EEC) available

The SCALANCE XR-300 switches are available with the following port types:

10/100/1000 Mbps, RJ45 connection

- Automatic detection of data transfer rate (10, 100 or 1000 Mbps), with autosensing and autocrossover function for connecting IE FC cables via IE FC RJ45 plugs over distances up to 100 m.

1000/2500/5000/10000 Mbps, RJ45 connection

- Automatic detection of data transfer rate (1000, 2500, 5000 or 10000 Mbps), with autosensing and autocrossover function for connecting IE FC cables via IE FC RJ45 plugs over distances up to 100 m.

100/1000 Mbps, SFP connector

- Use of 100 Mbps or 1000 Mbps SFP+ transceiver for multimode or single-mode transceivers

1000/10000 Mbps, SFP+ connector

- Use of 1000 Mbps or 10000 Mbps SFP+ transceiver for multimode or single-mode transceivers

Function

- Setup of electrical and optical Industrial Ethernet line, star and ring topologies
  - Use in ring topologies together with SCALANCE XC-200, SCALANCE XC-300, SCALANCE XM-400 and SCALANCE XR-500
- Uncrossed connecting cables can be used due to autocrossover function integrated in the ports
- Easy diagnostics using signaling contact, SNMP and web browser
- Easy copper cable diagnostics via web browser for localizing cable breaks
- Integration into the diagnostics of a PROFINET controller with expanded diagnostics functions for a consistent diagnostics concept, including network infrastructure
- Diagnostics of data traffic by means of a parameterizable mirror port with a standard commercial network analyzer
- Optimized support of PROFINET real-time communication (RT) through prioritizing
- Fast device replacement in the event of a fault by using the optional CLP removable data storage medium (included in scope of supply)
- Redundant connection to corporate networks

  SCALANCE XR-300 switches support the Spanning Tree Protocol (STP) and Rapid Spanning Tree Protocol (RSTP) standardized redundancy procedures.

  This enables a subnetwork to be connected redundantly to a higher-level corporate network with reduced requirements for the reconfiguration time (in the order of seconds)
- Support of virtual LANs (VLAN)

  For structuring Industrial Ethernet networks with a fast growing number of nodes, a physically existing network can be divided into several logical networks
- Load limiting with use of multicast protocols (e.g. querier, video)

  By learning the multicast sources and targets (IGMP snooping), SCALANCE XR-300 switches can also filter multicast data traffic and therefore limit the load in the network. Multicast and broadcast traffic can be limited.

Network topology and network configuration

The SCALANCE XR-300 Industrial Ethernet switches with IP20 degree of protection are usually installed in a control cabinet together with the stations to be connected.
Electrical and optical versions can be installed together in star, line and ring topologies.

When configuring the network, the following boundary conditions must be observed:

- Maximum cable length for twisted pair:
  - Max. 100 m with Industrial Ethernet FC cable and Industrial Ethernet FC plugs
  - Max. 10 m using patches with TP cord
- IP address:

  The IP address can be assigned by means of the DHCP (Dynamic Host Configuration Protocol).

  If there is no corresponding server in the network, the IP address can be assigned using the supplied software tool SINEC PNI (Primary Network Initialization) or STEP 7 / TIA Portal.

  Assignment via the local console port is also possible.

© Siemens AG 2024

Function (continued)

Commissioning and diagnostics

PROFINET diagnostic interrupts from SCALANCE XR-300 switches can be displayed with the appropriate SIMATIC engineering tools and processed in the PLC with an expanded diagnostics function.
The engineering outlay for the PLC and HMI has been drastically reduced due to the complete integration in the SIMATIC concept for system error messages.

SCALANCE XR-300 Industrial Ethernet switches can also be integrated in a network management system such as SINEC NMS using the standardized Simple Network Management Protocol (SNMP).
In the event of faults in the device, error messages (SNMP traps) can be sent to a network management system such as SINEC NMS or as an email to a specified network administrator.
The integrated web server allows configuration and diagnostics settings to be made using a standard web browser (e.g. port configuration). Statistical information can also be read out over the web server (e.g. port capacity utilization).

The following information is displayed on site by LEDs:

- Power
- Port status
- Data traffic
- Signaling contact
- Redundancy manager function (RM)

The Industrial Ethernet switches of the SCALANCE XR-300 line can also be monitored using the floating signaling contact.

Selection and ordering data

	Article No.
SCALANCE XR-300 Industrial Ethernet switches Industrial Ethernet switches with integrated SNMP access, web diagnostics, copper cable diagnostics and PROFINET diagnostics for configuring line, star and ring topologies; with integrated redundancy manager; incl. operating instructions, Industrial Ethernet network manual and configuration software on DVD	
SCALANCE XR326-8	
• 24 × RJ45 ports 10/100/1000 Mbps, 2 × RJ45 ports 1/2.5/5/10 Gbps, 8 × SFP+ port 1/10 Gbps, 24 V AC/DC	**6GK5334-2TS00-2AR3**
• 24 × RJ45 ports 10/100/1000 Mbps, 2 × RJ45 ports 1/2.5/5/10 Gbps, 8 × SFP+ port 1/10 Gbps, 1 x 230 V AC	**6GK5334-2TS00-3AR3**
• 24 × RJ45 ports 10/100/1000 Mbps, 2 × RJ45 ports 1/2.5/5/10 Gbps, 8 × SFP+ port 1/10 Gbps, 2 x 230 V AC	**6GK5334-2TS00-4AR3**
SCALANCE XR322-12	
• 20 × RJ45 ports 10/100/1000 Mbps, 2 × RJ45 ports 1/2.5/5/10 Gbps, 4 × SFP port 100/1000 Mbps, 8 × SFP+ port 1/10 Gbps, 24 V AC/DC	**6GK5334-3TS00-2AR3**
• 20 × RJ45 ports 10/100/1000 Mbps, 2 × RJ45 ports 1/2.5/5/10 Gbps, 4 × SFP port 100/1000 Mbps, 8 x SFP+ port 1/10 Gbps, 1 × 230 V AC	**6GK5334-3TS00-3AR3**
• 20 × RJ45 ports 10/100/1000 Mbps, 2 × RJ45 ports 1/2.5/5/10 Gbps, 4 × SFP port 100/1000 Mbps, 8 x SFP+ port 1/10 Gbps, 2 × 230 V AC	**6GK5334-3TS00-4AR3**
SCALANCE XR302-32	
• 2 × RJ45 ports 1/2.5/5/10 Gbps, 24 × SFP port 100/1000 Mbps, 8 × SFP+ port 1/10 Gbps, 24 V AC/DC	**6GK5334-5TS00-2AR3**
• 2 × RJ45 ports 1/2.5/5/10 Gbps, 24 × SFP port 100/1000 Mbps, 8 x SFP+ port 1/10 Gbps, 1 × 230 V AC	**6GK5334-5TS00-3AR3**
• 2 × RJ45 ports 1/2.5/5/10 Gbps, 24 × SFP port 100/1000 Mbps, 8 x SFP+ port 1/10 Gbps, 2 × 230 V AC	**6GK5334-5TS00-4AR3**
SCALANCE XR326-8EEC	
• 24 × RJ45 ports 10/100/1000 Mbps, 2 × RJ45 ports 1/2.5/5/10 Gbps, 8 × SFP+ port 1/10 Gbps, conformal coating, 24 V AC/DC	**6GK5334-2TS00-2ER3**

© Siemens AG 2024

Accessories

	Article No.
SCALANCE RACK MOUNT KIT Mounting bracket for 19 inch rack installation for SCALANCE XR-300/XR-500; 1 pack = 4 units; spare part	**GK5980-2BA00-0AA4**
IE FC RJ45 plug 4 x 2 RJ45 plug data connector (10/100/1000 Mbps), for connection to IE FC TP cables 4×2, with rugged metal enclosure and FastConnect connection technology	**6GK1901-1BB12-2AA0**
IE FC TP standard cable GP 4 x 2 TP installation cable Cat6 for connecting to IE FC RJ45 plug 4x2, AWG 24, sold by the meter; max. delivery unit 1000 m; minimum order quantity 20 m, also available preassembled with RJ45 plugs in various lengths	**6XV1878-2A**
IE connecting cable SFP+/SFP+ Preassembled IE connecting cable with two SFP-plus connectors Length:	
• 1 m	**6GK5980-3CB00-0AA1**
• 2 m	**6GK5980-3CB00-0AA2**
• 7 m	**6GK5980-3CB00-0AA7**
IE FC flexible cable GP 4 x 2 TP installation cable Cat7 for connection to IE FC RJ45 plug 4x2, AWG26, sold by the meter; max. delivery unit 1000 m, minimum order quantity 20 m	**6XV1876-2B**
SCALANCE TAP104 Test access port for the reaction-free extraction of Ethernet data frames (10/100 Mbps) from both transmission directions; extracts complete data traffic, including faulty frames, for further diagnostics.	**6GK5104-0BA00-1SA2**
TP cord RJ45/RJ45	
• 2 m	**6XV1870-3QH20**
• 3 m	**6XV1870-3QH30**
MM FO cord LC/LC	
• 1 m	**6XV1843-5EH10-0AA0**
• 2 m	**6XV1843-5EH20-0AA0**
• 3 m	**6XV1843-5EH30-0AA0**

© Siemens AG 2024

Technical specifications

Article number	6GK5334-2TS00-2AR3	6GK5334-2TS00-3AR3	6GK5334-2TS00-4AR3	6GK5334-2TS00-2ER3
product type designation				
product brand name	SCALANCE	SCALANCE	SCALANCE	SCALANCE
transfer rate				
transfer rate	10 Mbit/s, 100 Mbit/s, 1 000 Mbit/s, 2.5 Gbit/s, 5 Gbit/s, 10 Gbit/s	10 Mbit/s, 100 Mbit/s, 1 000 Mbit/s, 2.5 Gbit/s, 5 Gbit/s, 10 Gbit/s	10 Mbit/s, 100 Mbit/s, 1 000 Mbit/s, 2.5 Gbit/s, 5 Gbit/s, 10 Gbit/s	10 Mbit/s, 100 Mbit/s, 1 000 Mbit/s, 2.5 Gbit/s, 5 Gbit/s, 10 Gbit/s
interfaces for communication integrated				
number of electrical connections				
• for network components or terminal equipment	26; RJ45	26; RJ45	26; RJ45	26; RJ45
number of 10/100/1000 Mbit/s RJ45 ports				
• with securing collar	26	26	26	26
number of 1000/2500/5000/10000 Mbps RJ45 ports with securing collar	2	2	2	2
number of electrical connections				
• for SFP+	8; 1000 Mbps and 10000 Mbps SFP usable	8; 1000 Mbps and 10000 Mbps SFP usable	8; 1000 Mbps and 10000 Mbps SFP usable	8; 1000 Mbps and 10000 Mbps SFP usable
interfaces other				
number of electrical connections				
• for operator console	1	1	1	1
• for signaling contact	1	1	1	1
• for power supply	1	1	2	1
type of electrical connection				
• for operator console	USB (2.0 Port, Type B, serial via USB)	USB (2.0 Port, Type B, serial via USB)	USB (2.0 Port, Type B, serial via USB)	USB (2.0 Port, Type B, serial via USB)
• for signaling contact	2-pole terminal block	2-pole terminal block	2-pole terminal block	2-pole terminal block
• for power supply	2 x 2-pin terminal block	IEC plug C14 AC supply or 2-pole terminal block for DC supply	IEC plug C14 AC supply or 2-pole terminal block for DC supply	2 x 2-pin terminal block
design of the removable storage				
• CLP	Yes	Yes	Yes	Yes
operating voltage of the signaling contacts				
• at AC rated value	24 V	24 V	24 V	24 V
• at DC rated value	24 V	24 V	24 V	24 V
operational current of the signaling contacts				
• at DC maximum	0.1 A	0.1 A	0.1 A	0.1 A
supply voltage, current consumption, power loss				
product component connection for redundant voltage supply	Yes	No	Yes	Yes
type of voltage supply redundant power supply unit	No	No	Yes	No
type of voltage 1 of the supply voltage	DC	DC	DC	DC
• supply voltage 1 rated value	24 V	100V ... 250V DC	100V ... 250V DC	24 V
• power loss [W] 1 rated value	72 W	99 W	99 W	72 W
• supply voltage 1 rated value	19.2 ... 31.2 V	77 ... 300 V	77 ... 300 V	19.2 ... 31.2 V
• consumed current 1 maximum	3 A	0.8 A	0.8 A	3 A
• type of electrical connection 1 for power supply	2 x 2-pole terminal block	2-pole terminal block	2-pole terminal block	2 x 2-pole terminal block
• product component 1 fusing at power supply input	Yes	Yes	Yes	Yes
• fuse protection type 1 at input for supply voltage	F 10 A / 250 V	F 4A / 250 V	F 4A / 250 V	F 10 A / 250 V
type of voltage 2 of the supply voltage	AC (50 / 60Hz)	AC (50 / 60Hz)	AC (50 / 60Hz)	AC (50 / 60Hz)

© Siemens AG 2024

Technical specifications (continued)

Article number	6GK5334-2TS00-2AR3	6GK5334-2TS00-3AR3	6GK5334-2TS00-4AR3	6GK5334-2TS00-2ER3
• supply voltage 2 rated value	24 V	240 V; 100V ... 240V AC	240 V; 100V ... 240V AC	24 V
• power loss [W] 2 rated value	72 W	99 W	99 W	72 W
• supply voltage 2 rated value	19.2 ... 30 V	85 ... 264 V	85 ... 264 V	19.2 ... 30 V
• consumed current 2 maximum	3 A	0.8 A	0.8 A	3 A
• type of electrical connection 2 for power supply	2 x 2-pole terminal block	C14, IEC plug	C14, IEC plug	2 x 2-pole terminal block
• fuse protection type 2 at input for supply voltage	F 10 A / 250 V	F 4A / 250 V	F 4A / 250 V	F 10 A / 250 V
ambient conditions				
ambient temperature in horizontal mounting position during operation	-40 ... +70 °C; Starting at -40 °C; The maximum ambient temperature during operation depends on the operating height and the plug-in transceivers, see also manual.	-25 ... +60 °C; Starting at -25 °C; The maximum ambient temperature during operation depends on the operating height and the plug-in transceivers, see also manual.	-25 ... +60 °C; Starting at -25 °C; The maximum ambient temperature during operation depends on the operating height and the plug-in transceivers, see also manual.	-40 ... +70 °C; Starting at -40 °C; The maximum ambient temperature during operation depends on the operating height and the plug-in transceivers, see also manual.
installation altitude at height above sea level maximum	4 000 m	3 000 m	3 000 m	4 000 m
relative humidity				
• at 25 °C without condensation during operation maximum	95 %	95 %	95 %	95 %
operating condition fanless operation	Yes	Yes	Yes	Yes
protection class IP	IP20	IP20	IP20	IP20
design, dimensions and weights				
design	19" rack	19" rack	19" rack	19" rack
number of modular height units relating to 19-inch cabinet	1	1	1	1
width	446 mm	446 mm	446 mm	446 mm
height	43.6 mm	43.6 mm	43.6 mm	43.6 mm
depth	374.8 mm	374.8 mm	374.8 mm	374.8 mm
net weight	8 kg	8.2 kg	8.4 kg	8 kg
product feature conformal coating				Yes
material of the enclosure	metal	metal	metal	metal
fastening method				
• 19-inch installation	Yes	Yes	Yes	Yes
product features, product functions, product components general				
cascading in the case of a redundant ring at reconfiguration time of <\~0.3\~s	50	50	50	50
cascading in cases of star topology	any (depending only on signal propagation time)	any (depending only on signal propagation time)	any (depending only on signal propagation time)	any (depending only on signal propagation time)
number of automatically learnable MAC addresses	16 382	16 382	16 382	16 382
number of QoS queues per port	8	8	8	8
product function				
• QoS according to IEEE 802.1Q	Yes	Yes	Yes	Yes
product feature				
• Store & Forward switching method	Yes	Yes	Yes	Yes
product functions management, configuration, engineering				
product function				
• CLI	Yes	Yes	Yes	Yes
• web-based management	Yes	Yes	Yes	Yes
• MIB support	Yes	Yes	Yes	Yes
• TRAPs via email	Yes	Yes	Yes	Yes

© Siemens AG 2024

Technical specifications (continued)

Article number	6GK5334-2TS00-2AR3	6GK5334-2TS00-3AR3	6GK5334-2TS00-4AR3	6GK5334-2TS00-2ER3
• configuration with STEP 7	Yes	Yes	Yes	Yes
• RMON	Yes	Yes	Yes	Yes
• SMTP server	No	No	No	No
• port mirroring	Yes	Yes	Yes	Yes
• multiport mirroring	Yes	Yes	Yes	Yes
• Encapsulated Remote Traffic Mirroring (ERTM)	Yes	Yes	Yes	Yes
• CoS	Yes	Yes	Yes	Yes
• PROFINET IO diagnosis	Yes	Yes	Yes	Yes
• switch-managed	Yes	Yes	Yes	Yes
PROFINET conformity class	B	B	B	B
network load class according to PROFINET	3	3	3	3
telegram length for Ethernet maximum	9 194 byte	9 194 byte	9 194 byte	9 194 byte
protocol is supported				
• Telnet	Yes	Yes	Yes	Yes
• HTTP	Yes	Yes	Yes	Yes
• HTTPS	Yes	Yes	Yes	Yes
• TFTP	Yes	Yes	Yes	Yes
• FTP	Yes	Yes	Yes	Yes
• SFTP	Yes	Yes	Yes	Yes
• BOOTP	Yes	Yes	Yes	Yes
• NETCONF	Yes	Yes	Yes	Yes
• GMRP	Yes	Yes	Yes	Yes
• DCP	Yes	Yes	Yes	Yes
• LLDP	Yes	Yes	Yes	Yes
• EtherNet/IP	Yes	Yes	Yes	Yes
• SNMP v1	Yes	Yes	Yes	Yes
• SNMP v2	Yes	Yes	Yes	Yes
• SNMP v3	Yes	Yes	Yes	Yes
• IGMP (snooping/querier)	Yes	Yes	Yes	Yes
identification & maintenance function				
• I&M0 - device-specific information	Yes	Yes	Yes	Yes
• I&M1 - higher level designation/location designation	Yes	Yes	Yes	Yes
product functions diagnostics				
product function				
• port diagnostics	Yes	Yes	Yes	Yes
• statistics Packet Size	Yes	Yes	Yes	Yes
• statistics packet type	Yes	Yes	Yes	Yes
• error statistics	Yes	Yes	Yes	Yes
• SysLog	Yes	Yes	Yes	Yes
product functions VLAN				
product function				
• VLAN - port based	Yes	Yes	Yes	Yes
• VLAN - protocol-based	No	No	No	No
• VLAN - IP-based	No	No	No	No
number of VLANs maximum	257	257	257	257
number of VLANs - dynamic maximum	257	257	257	257
number of VLANs at ring redundancy (HRP; MRP; standby link)	257	257	257	257

© Siemens AG 2024

Technical specifications (continued)

Article number	6GK5334-2TS00-2AR3	6GK5334-2TS00-3AR3	6GK5334-2TS00-4AR3	6GK5334-2TS00-2ER3
product functions DHCP				
product function				
• DHCP server	Yes	Yes	Yes	Yes
• DHCP client	Yes	Yes	Yes	Yes
• DHCP Option 82	Yes	Yes	Yes	Yes
• DHCP Option 66	Yes	Yes	Yes	Yes
• DHCP Option 67	Yes	Yes	Yes	Yes
product functions redundancy				
protocol is supported Media Redundancy Protocol (MRP)	Yes	Yes	Yes	Yes
product function				
• media redundancy protocol (MRP) with redundancy manager	Yes	Yes	Yes	Yes
• Media Redundancy Protocol Interconnection (MRP-I)	Yes	Yes	Yes	Yes
• of the PROFINET IO device is supported H-Sync forwarding	Yes	Yes	Yes	Yes
• of the PROFINET IO device is supported PROFINET system redundancy	Yes	Yes	Yes	Yes
• ring redundancy	Yes	Yes	Yes	Yes
• high speed redundancy protocol (HRP) with redundancy manager	Yes	Yes	Yes	Yes
• high speed redundancy protocol (HRP) with standby redundancy	Yes	Yes	Yes	Yes
• redundancy procedure STP	Yes	Yes	Yes	Yes
• redundancy procedure RSTP	Yes	Yes	Yes	Yes
• redundancy procedure RSTP+	Yes	Yes	Yes	Yes
• redundancy procedure MSTP	Yes	Yes	Yes	Yes
• High-availability Seamless Redundancy (HSR)	Yes	Yes	Yes	Yes
• Parallel Redundancy Protocol (PRP)/operation in the PRP-network	Yes	Yes	Yes	Yes
• Parallel Redundancy Protocol (PRP)/Redundant Network Access (RNA)	Yes	Yes	Yes	Yes
• passive listening	Yes	Yes	Yes	Yes
protocol is supported				
• STP/RSTP	Yes	Yes	Yes	Yes
• STP	Yes	Yes	Yes	Yes
• RSTP	Yes	Yes	Yes	Yes
• MSTP	No	No	No	No
• RSTP big network support	Yes	Yes	Yes	Yes
• LACP	Yes	Yes	Yes	Yes
system modification during operation				
product function configuration in RUN via CiR/H-CiR	Yes	Yes	Yes	Yes
product functions security				
product function				
• IEEE 802.1x (radius)	Yes	Yes	Yes	Yes
• broadcast/multicast/unicast limiter	Yes	Yes	Yes	Yes
• broadcast blocking	Yes	Yes	Yes	Yes
protocol is supported				
• SSH	Yes	Yes	Yes	Yes
• SSL	Yes	Yes	Yes	Yes

© Siemens AG 2024

Technical specifications (continued)

Article number	6GK5334-2TS00-2AR3	6GK5334-2TS00-3AR3	6GK5334-2TS00-4AR3	6GK5334-2TS00-2ER3
product functions time				
product function				
• SICLOCK support	Yes	Yes	Yes	Yes
• NTP-client	Yes	Yes	Yes	Yes
• SNTP client	Yes	Yes	Yes	Yes
• IEEE 1588 v2 transparent forwarding	Yes	Yes	Yes	Yes
protocol is supported				
• NTP	Yes	Yes	Yes	Yes
• SNTP	Yes	Yes	Yes	Yes
• IEEE 1588 profile default	No	No	No	No
accuracy at IEEE 1588 v2				
• not less than	100 µs	100 µs	100 µs	100 µs
• typical	50 ns	50 ns	50 ns	50 ns
standards, specifications, approvals				
certificate of suitability				
• CE marking	Yes	Yes	Yes	Yes
• KC approval	Yes	Yes	Yes	Yes
• Regulatory Compliance Mark (RCM)	Yes	Yes	Yes	Yes
product conformity according to EMC-guideline	2014/30/EU	2014/30/EU	2014/30/EU	2014/30/EU
standard				
• for EMC interference emission	EN 61000-6-4, Railway (trackside) available soon	EN 61000-6-4, Railway (trackside) available soon	EN 61000-6-4, Railway (trackside) available soon	EN 61000-6-4, Railway (trackside) available soon
• for immunity to EMC	EN 61000-6-2, Railway (trackside) available soon			EN 61000-6-2, Railway (trackside) available soon
• for safety from CSA and UL	in preparation	in preparation	in preparation	in preparation
standards, specifications, approvals hazardous environments				
certificate of suitability				
• ATEX	Yes			Yes
• UKEX	Yes			Yes
• IECEx	Yes			Yes
• CCC for hazardous zone according to GB standard	Yes			Yes
• FM registration	Yes			Yes
standards, specifications, approvals other				
certificate of suitability				
• railway application in accordance with EN 50121-4		Yes	Yes	
• railway application in accordance with EN 50125-3		Yes	Yes	
IT security for industrial automation systems according to IEC 62443-4-2:2019	Yes	Yes	Yes	Yes
standards, specifications, approvals Environmental Product Declaration				
Environmental Product Declaration	Yes	Yes	Yes	Yes
Global Warming Potential [CO2 eq]				
• total	991.85 kg	1 274.81 kg	1 274.81 kg	991.85 kg
• during manufacturing	225.96 kg	225.96 kg	225.96 kg	225.96 kg
• during operation	765.04 kg	1 048 kg	1 048 kg	765.04 kg
• after end of life	0.85 kg	0.85 kg	0.85 kg	0.85 kg

© Siemens AG 2024

Technical specifications (continued)

Article number	6GK5334-2TS00-2AR3	6GK5334-2TS00-3AR3	6GK5334-2TS00-4AR3	6GK5334-2TS00-2ER3
product functions general				
MTBF	12.6 a	8.3 a	10.2 a	12.6 a
reference temperature for MTBF determination	40 °C	40 °C	40 °C	40 °C
reference code				
• according to IEC 81346-2	KF	KF	KF	KF
• according to IEC 81346-2:2019	KFE	KFE	KFE	KFE
Warranty period	5 a	5 a	5 a	5 a
further information internet links				
internet link				
• to website: Selection guide for cables and connectors	https://support.industry.siemens.com/cs/ww/en/view/109766-358	https://support.industry.siemens.com/cs/ww/en/view/109766-358	https://support.industry.siemens.com/cs/ww/en/view/109766-358	https://support.industry.siemens.com/cs/ww/en/view/109766-358
• to web page: selection aid TIA Selection Tool	https://www.siemens.com/tstcloud	https://www.siemens.com/tstcloud	https://www.siemens.com/tstcloud	https://www.siemens.com/tstcloud
• to website: Industrial communication	https://www.siemens.com/simatic-net	https://www.siemens.com/simatic-net	https://www.siemens.com/simatic-net	https://www.siemens.com/simatic-net
• to web page: SiePortal	https://sieportal.siemens.com/	https://sieportal.siemens.com/	https://sieportal.siemens.com/	https://sieportal.siemens.com/
• to website: Image database	https://www.automation.siemens.com/bilddb	https://www.automation.siemens.com/bilddb	https://www.automation.siemens.com/bilddb	https://www.automation.siemens.com/bilddb
• to website: CAx-Download-Manager	https://www.siemens.com/cax	https://www.siemens.com/cax	https://www.siemens.com/cax	https://www.siemens.com/cax
• to website: Industry Online Support	https://support.industry.siemens.com	https://support.industry.siemens.com	https://support.industry.siemens.com	https://support.industry.siemens.com

Article number	6GK5334-3TS00-2AR3	6GK5334-3TS00-3AR3	6GK5334-3TS00-4AR3
product type designation			
product brand name	SCALANCE	SCALANCE	SCALANCE
transfer rate			
transfer rate	10 Mbit/s, 100 Mbit/s, 1 000 Mbit/s, 2.5 Gbit/s, 5 Gbit/s, 10 Gbit/s	10 Mbit/s, 100 Mbit/s, 1 000 Mbit/s, 2.5 Gbit/s, 5 Gbit/s, 10 Gbit/s	10 Mbit/s, 100 Mbit/s, 1 000 Mbit/s, 2.5 Gbit/s, 5 Gbit/s, 10 Gbit/s
interfaces for communication integrated			
number of electrical connections			
• for network components or terminal equipment	22; RJ45	22; RJ45	22; RJ45
number of 10/100/1000 Mbit/s RJ45 ports			
• with securing collar	22	22	22
number of 1000/2500/5000/10000 Mbps RJ45 ports with securing collar	2	2	2
number of electrical connections			
• for SFP	4; 100 Mbps and 1000 Mbps SFP usable	4; 100 Mbps and 1000 Mbps SFP usable	4; 100 Mbps and 1000 Mbps SFP usable
• for SFP+	8; 1000 Mbps and 10000 Mbps SFP usable	8; 1000 Mbps and 10000 Mbps SFP usable	8; 1000 Mbps and 10000 Mbps SFP usable
interfaces other			
number of electrical connections			
• for operator console	1	1	1
• for signaling contact	1	1	1
• for power supply	1	1	2
type of electrical connection			
• for operator console	USB (2.0 Port, Type B, serial via USB)	USB (2.0 Port, Type B, serial via USB)	USB (2.0 Port, Type B, serial via USB)
• for signaling contact	2-pole terminal block	2-pole terminal block	2-pole terminal block
• for power supply	2 x 2-pin terminal block	IEC plug C14 AC supply or 2-pole terminal block for DC supply	IEC plug C14 AC supply or 2-pole terminal block for DC supply

© Siemens AG 2024

Technical specifications (continued)

Article number	6GK5334-3TS00-2AR3	6GK5334-3TS00-3AR3	6GK5334-3TS00-4AR3
design of the removable storage			
• CLP	Yes	Yes	Yes
operating voltage of the signaling contacts			
• at AC rated value	24 V	24 V	24 V
• at DC rated value	24 V	24 V	24 V
operational current of the signaling contacts			
• at DC maximum	0.1 A	0.1 A	0.1 A
supply voltage, current consumption, power loss			
product component connection for redundant voltage supply	Yes	No	Yes
type of voltage supply redundant power supply unit	No	No	Yes
type of voltage 1 of the supply voltage	DC	DC	DC
• supply voltage 1 rated value	24 V	100V ... 250V DC	100V ... 250V DC
• power loss [W] 1 rated value	72 W	99 W	99 W
• supply voltage 1 rated value	19.2 ... 31.2 V	77 ... 300 V	77 ... 300 V
• consumed current 1 maximum	3 A	0.8 A	0.8 A
• type of electrical connection 1 for power supply	2 x 2-pole terminal block	2-pole terminal block	2-pole terminal block
• product component 1 fusing at power supply input	Yes	Yes	Yes
• fuse protection type 1 at input for supply voltage	F 10 A / 250 V	F 4A / 250 V	F 4A / 250 V
type of voltage 2 of the supply voltage	AC (50 / 60Hz)	AC (50 / 60Hz)	AC (50 / 60Hz)
• supply voltage 2 rated value	24 V	240 V; 100V ... 240V AC	240 V; 100V ... 240V AC
• power loss [W] 2 rated value	72 W	99 W	99 W
• supply voltage 2 rated value	19.2 ... 30 V	85 ... 264 V	85 ... 264 V
• consumed current 2 maximum	3 A	0.8 A	0.8 A
• type of electrical connection 2 for power supply	2 x 2-pole terminal block	C14, IEC plug	C14, IEC plug
• fuse protection type 2 at input for supply voltage	F 10 A / 250 V	F 4A / 250 V	F 4A / 250 V
ambient conditions			
ambient temperature in horizontal mounting position during operation	-40 ... +70 °C; Starting at -40 °C; The maximum ambient temperature during operation depends on the operating height and the plug-in transceivers, see also manual.	-25 ... +60 °C; Starting at -25 °C; The maximum ambient temperature during operation depends on the operating height and the plug-in transceivers, see also manual.	-25 ... +60 °C; Starting at -25 °C; The maximum ambient temperature during operation depends on the operating height and the plug-in transceivers, see also manual.
installation altitude at height above sea level maximum	4 000 m	3 000 m	3 000 m
relative humidity			
• at 25 °C without condensation during operation maximum	95 %	95 %	95 %
operating condition fanless operation	Yes	Yes	Yes
protection class IP	IP20	IP20	IP20
design, dimensions and weights			
design	19" rack	19" rack	19" rack
number of modular height units relating to 19-inch cabinet	1	1	1
width	446 mm	446 mm	446 mm
height	43.6 mm	43.6 mm	43.6 mm
depth	374.8 mm	374.8 mm	374.8 mm
net weight	8 kg	8.2 kg	8.4 kg
material of the enclosure	metal	metal	metal
fastening method			
• 19-inch installation	Yes	Yes	Yes

© Siemens AG 2024

Technical specifications (continued)

Article number	6GK5334-3TS00-2AR3	6GK5334-3TS00-3AR3	6GK5334-3TS00-4AR3
product features, product functions, product components general			
cascading in the case of a redundant ring at reconfiguration time of <\~0.3\~s	50	50	50
cascading in cases of star topology	any (depending only on signal propagation time)	any (depending only on signal propagation time)	any (depending only on signal propagation time)
number of automatically learnable MAC addresses	16 382	16 382	16 382
number of QoS queues per port	8	8	8
product function			
• QoS according to IEEE 802.1Q	Yes	Yes	Yes
product feature			
• Store & Forward switching method	Yes	Yes	Yes
product functions management, configuration, engineering			
product function			
• CLI	Yes	Yes	Yes
• web-based management	Yes	Yes	Yes
• MIB support	Yes	Yes	Yes
• TRAPs via email	Yes	Yes	Yes
• configuration with STEP 7	Yes	Yes	Yes
• RMON	Yes	Yes	Yes
• SMTP server	No	No	No
• port mirroring	Yes	Yes	Yes
• multiport mirroring	Yes	Yes	Yes
• Encapsulated Remote Traffic Mirroring (ERTM)	Yes	Yes	Yes
• CoS	Yes	Yes	Yes
• PROFINET IO diagnosis	Yes	Yes	Yes
• switch-managed	Yes	Yes	Yes
PROFINET conformity class	B	B	B
network load class according to PROFINET	3	3	3
telegram length for Ethernet maximum	9 194 byte	9 194 byte	9 194 byte
protocol is supported			
• Telnet	Yes	Yes	Yes
• HTTP	Yes	Yes	Yes
• HTTPS	Yes	Yes	Yes
• TFTP	Yes	Yes	Yes
• FTP	Yes	Yes	Yes
• SFTP	Yes	Yes	Yes
• BOOTP	Yes	Yes	Yes
• NETCONF	Yes	Yes	Yes
• GMRP	Yes	Yes	Yes
• DCP	Yes	Yes	Yes
• LLDP	Yes	Yes	Yes
• EtherNet/IP	Yes	Yes	Yes
• SNMP v1	Yes	Yes	Yes
• SNMP v2	Yes	Yes	Yes
• SNMP v3	Yes	Yes	Yes
• IGMP (snooping/querier)	Yes	Yes	Yes
identification & maintenance function			
• I&M0 - device-specific information	Yes	Yes	Yes
• I&M1 - higher level designation/location designation	Yes	Yes	Yes

© Siemens AG 2024

Technical specifications (continued)

Article number	6GK5334-3TS00-2AR3	6GK5334-3TS00-3AR3	6GK5334-3TS00-4AR3
product functions diagnostics			
product function			
• port diagnostics	Yes	Yes	Yes
• statistics Packet Size	Yes	Yes	Yes
• statistics packet type	Yes	Yes	Yes
• error statistics	Yes	Yes	Yes
• SysLog	Yes	Yes	Yes
product functions VLAN			
product function			
• VLAN - port based	Yes	Yes	Yes
• VLAN - protocol-based	No	No	No
• VLAN - IP-based	No	No	No
number of VLANs maximum	257	257	257
number of VLANs - dynamic maximum	257	257	257
number of VLANs at ring redundancy (HRP; MRP; standby link)	257	257	257
product functions DHCP			
product function			
• DHCP server	Yes	Yes	Yes
• DHCP client	Yes	Yes	Yes
• DHCP Option 82	Yes	Yes	Yes
• DHCP Option 66	Yes	Yes	Yes
• DHCP Option 67	Yes	Yes	Yes
product functions redundancy			
protocol is supported Media Redundancy Protocol (MRP)	Yes	Yes	Yes
product function			
• media redundancy protocol (MRP) with redundancy manager	Yes	Yes	Yes
• Media Redundancy Protocol Interconnection (MRP-I)	Yes	Yes	Yes
• of the PROFINET IO device is supported H-Sync forwarding	Yes	Yes	Yes
• of the PROFINET IO device is supported PROFINET system redundancy	Yes	Yes	Yes
• ring redundancy	Yes	Yes	Yes
• high speed redundancy protocol (HRP) with redundancy manager	Yes	Yes	Yes
• high speed redundancy protocol (HRP) with standby redundancy	Yes	Yes	Yes
• redundancy procedure STP	Yes	Yes	Yes
• redundancy procedure RSTP	Yes	Yes	Yes
• redundancy procedure RSTP+	Yes	Yes	Yes
• redundancy procedure MSTP	Yes	Yes	Yes
• High-availability Seamless Redundancy (HSR)	Yes	Yes	Yes
• Parallel Redundancy Protocol (PRP)/operation in the PRP-network	Yes	Yes	Yes
• Parallel Redundancy Protocol (PRP)/Redundant Network Access (RNA)	Yes	Yes	Yes
• passive listening	Yes	Yes	Yes
protocol is supported			
• STP/RSTP	Yes	Yes	Yes
• STP	Yes	Yes	Yes

© Siemens AG 2024

Technical specifications (continued)

Article number	6GK5334-3TS00-2AR3	6GK5334-3TS00-3AR3	6GK5334-3TS00-4AR3
• RSTP	Yes	Yes	Yes
• MSTP	No	No	No
• RSTP big network support	Yes	Yes	Yes
• LACP	Yes	Yes	Yes
system modification during operation			
product function configuration in RUN via CiR/H-CiR	Yes	Yes	Yes
product functions security			
product function			
• IEEE 802.1x (radius)	Yes	Yes	Yes
• broadcast/multicast/unicast limiter	Yes	Yes	Yes
• broadcast blocking	Yes	Yes	Yes
protocol is supported			
• SSH	Yes	Yes	Yes
• SSL	Yes	Yes	Yes
product functions time			
product function			
• SICLOCK support	Yes	Yes	Yes
• NTP-client	Yes	Yes	Yes
• SNTP client	Yes	Yes	Yes
• IEEE 1588 v2 transparent forwarding	Yes	Yes	Yes
protocol is supported			
• NTP	Yes	Yes	Yes
• SNTP	Yes	Yes	Yes
• IEEE 1588 profile default	No	No	No
accuracy at IEEE 1588 v2			
• not less than	100 µs	100 µs	100 µs
• typical	50 ns	50 ns	50 ns
standards, specifications, approvals			
certificate of suitability			
• CE marking	Yes	Yes	Yes
• KC approval	Yes	Yes	Yes
• Regulatory Compliance Mark (RCM)	Yes		
product conformity according to EMC-guideline	2014/30/EU	2014/30/EU	2014/30/EU
standard			
• for EMC interference emission	EN 61000-6-4, Railway (trackside) available soon	EN 61000-6-4, Railway (trackside) available soon	EN 61000-6-4, Railway (trackside) available soon
• for immunity to EMC	EN 61000-6-2, Railway (trackside) available soon		
• for safety from CSA and UL	in preparation	in preparation	in preparation
standards, specifications, approvals hazardous environments			
certificate of suitability			
• ATEX	Yes		
• UKEX	Yes		
• IECEx	Yes		
• CCC for hazardous zone according to GB standard	Yes		
• FM registration	Yes		
standards, specifications, approvals other			
certificate of suitability			
• railway application in accordance with EN 50121-4		Yes	Yes

© Siemens AG 2024

Technical specifications (continued)

Article number	6GK5334-3TS00-2AR3	6GK5334-3TS00-3AR3	6GK5334-3TS00-4AR3
• railway application in accordance with EN 50125-3		Yes	Yes
IT security for industrial automation systems according to IEC 62443-4-2:2019	Yes	Yes	Yes
standards, specifications, approvals Environmental Product Declaration			
Environmental Product Declaration	Yes	Yes	Yes
Global Warming Potential [CO2 eq]			
• total	991.85 kg	1 274.81 kg	1 274.81 kg
• during manufacturing	225.96 kg	225.96 kg	225.96 kg
• during operation	765.04 kg	1 048 kg	1 048 kg
• after end of life	0.85 kg	0.85 kg	0.85 kg
product functions general			
MTBF	10 a	10 a	10 a
reference temperature for MTBF determination	40 °C	40 °C	40 °C
reference code			
• according to IEC 81346-2	KF	KF	KF
• according to IEC 81346-2:2019	KFE	KFE	KFE
Warranty period	5 a	5 a	5 a
further information internet links			
internet link			
• to website: Selection guide for cables and connectors	https://support.industry.siemens.com/cs/ww/en/view/109766358	https://support.industry.siemens.com/cs/ww/en/view/109766358	https://support.industry.siemens.com/cs/ww/en/view/109766358
• to web page: selection aid TIA Selection Tool	https://www.siemens.com/tstcloud	https://www.siemens.com/tstcloud	https://www.siemens.com/tstcloud
• to website: Industrial communication	https://www.siemens.com/simaticnet	https://www.siemens.com/simaticnet	https://www.siemens.com/simaticnet
• to web page: SiePortal	https://sieportal.siemens.com/	https://sieportal.siemens.com/	https://sieportal.siemens.com/
• to website: Image database	https://www.automation.siemens.com/bilddb	https://www.automation.siemens.com/bilddb	https://www.automation.siemens.com/bilddb
• to website: CAx-Download-Manager	https://www.siemens.com/cax	https://www.siemens.com/cax	https://www.siemens.com/cax
• to website: Industry Online Support	https://support.industry.siemens.com	https://support.industry.siemens.com	https://support.industry.siemens.com

More information

Selection Tool:

To support the selection of SCALANCE network components, the TIA Selection Tool is available at:

www.siemens.com/tst

Ordering overview:

You can find more information on the FastConnect range in the "Cabling technology for communication networks in industry" ordering overview.

© Siemens AG 2024

Overview

The SCALANCE XR-300WG product line (work group switches) are Industrial Ethernet switches for industry-related applications such as control rooms and applications in the industry-related sector. They enable the configuration of electrical and optical line, star and ring topologies with transmission rates of 10/100/1 000 Mbps as well as 2 x 10 Gbps (SCALANCE XR326-2C PoE WG only) and are designed for installation in 19" control cabinets.

- Up to 28 × electrical interfaces (10/100/1000 Mbps) with RJ45 connections;

  of which 4 × combo ports for the connection of optical interfaces (1000 Mbps) with SFPs
- High-speed media redundancy through integrated redundancy manager both for Gigabit Ethernet (with SCALANCE X-200, X-300, XM-400, XR-500) and Fast Ethernet (e.g. in combination with SCALANCE XB-200 switches)
- Seamless integration of automation networks in existing corporate networks since a large number of IT standard functions are supported (VLANs, IGMP Snooping/Querier, STP/RSTP, Quality of Service)
- Redundant integration into higher-level networks thanks to support for standardized redundancy procedures (Spanning Tree Protocol/Rapid Reconfiguration Spanning Tree Protocol/MRP)
- Remote diagnostics with integrated system diagnostics over PROFINET, web browser, NMS, CLI or SNMP
- Version with PoE support (24x 10/100/1000 Mbps PoE ports) and 2x 10 Gbps combo PoE ports

Benefits

get Designed for Industry

- Flexible network design through integrated combo ports that can be used both as copper (RJ45) and FO ports (SFP).
- High availability of the network thanks to:
  - Redundant voltage infeed (only with 24 V DC)
  - Redundant network structures based on fiber-optic or twisted-pair cables (redundancy manager and STP/RSTP function integrated)
  - Extremely fast network reconfiguration in the event of a fault (MRP: 200 ms)
- Protection of investment through integration into existing network management systems such as SINEC NMS by means of standardized SNMP access
- Time saving during engineering, commissioning and in the operating phase of a plant by using the integrated configuration and diagnostics in STEP 7, without additional software
- Space savings in the control cabinet through shallow overall depth, so that 19" control cabinets can be populated from both sides with SCALANCE XR-300WG switches. Recess for insertion and installation on a 35 mm DIN rail
- Easy and cost-saving supply of connected cameras (e.g. SIMATIC MV500 IP or Ident cameras), WLAN access points (e.g. SCALANCE W) or localization components (e.g. SIMATIC RTLS gateways) with data and power on a single cable by using the PoE standard (Power over Ethernet, XR326-2C PoE WG)
- Optimal use of PoE power budget through PoE Power Management. The available PoE power budget can be distributed by the user to the PoE ports
- Realization of high-performance networks over long distances

Application

SCALANCE XR-300WG switches are ideal for use in plant networks with industry-related requirements and for integrating the industrial network into an existing corporate network. Both at the field level connection and the control level, the SCALANCE XR-300WG switches perform networking with the distributed field segments and ensure high plant availability with extensive diagnostics options and high transmission rates. The available combo ports allow perfect adaptation to the particular application by using electrical as well as optical interfaces.

The PoE version enables simple data and power supply to connected end devices via the Ethernet cable. In addition, high-performance networks can be implemented over long distances with 2x 10 Gbps SFP combo ports.

The SCALANCE XR-300WG product line is suitable for the setup of electrical and optical Industrial Ethernet line, star and ring topologies with up to 28 ports. The high port density means that the XR-300WG switches can also to be used as star couplers.

© Siemens AG 2024

Design

The SCALANCE XR-300WG Industrial Ethernet switches with a rugged metal enclosure with IP30 degree of protection are optimized for installation in the 19" control cabinet. 24 V DC and 100 ... 240 V AC versions are available in just one height, 19".

The switches feature:

- A 2 × 2-pin terminal block for redundant power infeed for protection against voltage failure in the 24 V DC version
- 3-pin IEC plug interface for non-heating apparatus for voltage infeed in the 100 ... 240 V AC version
- Status information at the port for local diagnostics (link status, data traffic)
- A RESET button for resetting the device
- A console port (serial interface) for on-site parameter assignment/diagnostics (RJ11 cable to RS232 not included in scope of supply)

The SCALANCE XR-300WG switches are available with the following port types:

- Electrical RJ45 interfaces that support 10/100 Mbps or 10/100/1000 Mbps depending on the device version
- Optical SFP interfaces that can be used for multimode or single-mode SFPs for transmission of 1000 Mbps (combo ports). With the PoE version, the SFP interfaces of the combo ports support both 1000 Mbps SFPs and 10000 Mbps SFP+.

Product variants

SCALANCE XR324WG

With 24 × 10/100 Mbps ports and redundant 24 V DC power supply

SCALANCE XR324WG

With 24 × 10/100 Mbps ports and 100 ... 240 V AC power supply

SCALANCE XR328-4C WG

With 24 × 10/100 Mbps ports, 4 × combo ports and redundant 24 V DC power supply

SCALANCE XR328-4C WG

With 24 x 10/100 Mbps ports, 4 x combo ports and 100 - 240 V AC power supply

SCALANCE XR328-4C WG

With 24 × 10/100 Mbps ports, 4 × combo ports and redundant 24 V DC power supply
Reduced number of approvals (no UL/FM approval)

SCALANCE XR328-4C WG

With 24 × 10/100 Mbps ports, 4 × combo ports and 100 - 240 V AC power supply
Reduced number of approvals (no UL/FM approval)

SCALANCE XR328-4C WG

With 24 × 10/100/1000 Mbps ports, 4 × combo ports and redundant 24 V DC power supply

SCALANCE XR328-4C WG

With 24 × 10/100/1000 Mbps ports, 4 × combo ports and 100 - 240 V AC power supply

SCALANCE XR326-2C PoE WG

With 24 x 10/100/1000 Mbps PoE ports (max. 30W, IEEE802.3at), 2 x combo PoE port (max. 60W at the RJ45 port, IEEE802.3bt combined with 1G/10G SFP+ port) and 100 - 240 V AC power supply. Maximum PoE power in the device 200 W. PoE power can be expanded to 600 W by using additional power supply units.

Function

- Integrated redundancy manager for constructing Fast Ethernet and Gigabit Ethernet ring topologies with high-speed media redundancy. Reliable communication is achieved by closing an optical or electrical line in combination with SCALANCE XM-400, X-300 or X-200 switches to form a ring. The redundancy manager (RM) integrated in the SCALANCE XR-300WG switch monitors the network functioning. It recognizes the failure of a transmission link or of a SCALANCE X switch in the ring and activates a substitute path within a maximum of 200 milliseconds.
- Support for MRP Interconnect and RSTP+
- Redundant connection to corporate networks;

  SCALANCE XR-300 switches support the Spanning Tree Protocol (STP) and Rapid Spanning Tree Protocol (RSTP) standardized redundancy procedures. This enables a subnetwork to be connected redundantly to a higher level corporate network with reduced requirements for the reconfiguration time (in the order of seconds).
- Support of virtual networks (VLAN);

  for structuring Industrial Ethernet networks with a fast-growing number of nodes, a physically existing network can be divided into several virtual subnetworks.
- Load limiting when multicast protocols (e.g. video transmission) are used;

  through learning the multicast sources and targets (IGMP Snooping), SCALANCE XR-300WG switches can also filter multicast data traffic and therefore limit the load in the network. Multicast and broadcast traffic can be limited.
- Time synchronization;

  diagnostic messages (log table entries, emails) are time-stamped. The local time is standardized throughout the network by means of synchronization with a SICLOCK time transmitter, SNTP or NTP server, thereby simplifying the assignment of diagnostic messages from multiple several devices.
- Quality of Service (IEEE 802.1p) for prioritization of network traffic.
- Easy connection of PoE end devices such as IP cameras or access points using the PoE function and realization of high-performance networks over long distances (XR326-2C PoE WG only).

Network topology and network configuration

The network topology can easily be adapted to the structure of the plant using SCALANCE XR-300WG Industrial Ethernet switches.

The following network structures and combinations of structures can be implemented:

- Fast Ethernet with fast media redundancy;

  to increase network availability, as many as 50 linear cascaded X-200, X-300, XM-400 or XR-500 switches can be configured into a ring.
- Several rings can be redundantly coupled through the standby function (HRP)
- In addition, SCALANCE XR-300WG supports redundant connection of the ring topology to the corporate network with the Rapid Spanning Tree protocol.
- Star structure with SCALANCE XR-300WG switches:

  Each SCALANCE XR-300WG switch represents a star point which can interconnect up to 28 nodes or subnets electrically or optically.

When configuring the network, the following boundary conditions must be observed:

© Siemens AG 2024

Function (continued)

- Maximum cable length between two switches for multimode fiber-optic cables:
  - 2 km at 1 Gbps
- Maximum cable length between two switches for single-mode fiber-optic cables:
  - 10 to 120 km at 1 Gbps
- Maximum cable length of the TP cable between two switches:
  - Max. 100 m with IE FC cable 2x2 and IE FC RJ45 plug 180 2x2
  - Max. 100 m at 1 Gbps with IE FC standard cable 4x2 (AWG 24) and IE FC RJ45 plug 4x2
  - Max. 10 m using patches with TP cord or 50 m without patches

Commissioning and diagnostics

Setting options:

- Redundancy manager RM;

  to establish a ring, a SCALANCE XR-300 is switched to RM mode. The Gigabit ports (electrical or optical) are preferably used as ring ports. The non-ring ports of the RM can be used freely for the connection of terminal devices and networks. If the MRP redundancy procedure standardized by PROFINET is used, the RM is adjusted automatically.
- The IP address can be assigned by means of the DHCP (Dynamic Host Configuration Protocol). If there is no corresponding server in the network, the IP address can be assigned using the supplied software tool SINEC PNI (Primary Network Initialization) or STEP 7 / TIA Portal. Assignment via the local console port is also possible.

Diagnostic options on site:

- The following status information is displayed by LEDs on site:
  - Port status at port (link, data traffic)
  - Status of the two power supplies
  - RM mode
- Monitoring via the Industrial Ethernet network;

  the following options are available:
  - Remote via standard browser (web-based management):

    Selection of SCALANCE XR-300WG switches via the network from a PC with browser
  - Remote via SNMP V1, V2c, V3:

    Reliable integration of SCALANCE XR-300WG switches via the network into a network management system, e.g. SINEC NMS
  - Easy integration in the process and system diagnostics with PROFINET via SIMATIC PCS 7 and PCS neo
  - Remote via PROFINET diagnostics:

    PROFINET diagnostic interrupts of SCALANCE XR-300WG switches can be displayed with the appropriate SIMATIC engineering tools and processed in the control unit. The engineering outlay for the PLC and HMI has been drastically reduced due to the complete integration in the SIMATIC concept for system error messages.

Network management

The network management provides the following functions:

- Password-protected dial-up for "Administrator" (read and write authorization) and "User" (read only)
- Read-out of version and status information
- Setting the standby mask and address information

Function (continued)

- Fixed parameterization of the ports (data rates, half/full duplex) and filter tables
- Setting of Spanning/Rapid Spanning Tree parameters
- Parameter assignment for web management services
- Security
  - Ports can be connected or disconnected
  - Port-based network access control according to IEEE 802.1X
  - Support of Access Control List (ACL)
- Output of statistics information
- Diagnostics of data traffic by means of a parameterizable mirror port with a standard commercial network analyzer (e.g. via Bus Analyzer Agent XM-400)
- Loading of new firmware versions or configuration data via the network from a TFTP server or directly via HTTP/HTTPS with a web browser
- Saving of configuration data or log table via the network on a TFTP server

If faults occur in the network, the SCALANCE XR-300WG switch can independently send error messages (traps) to a network management system (e.g. SINEC NMS) or emails to a specified network administrator.

Remote monitoring (RMON) provides the following functions:
The SCALANCE XR-300WG switch can collect statistical information according to the RMON groups 1 through 4. These include, for example, fault statistics that are kept for each port. This information can be read out through web-based management in the statistics sub-area.

© Siemens AG 2024

Integration

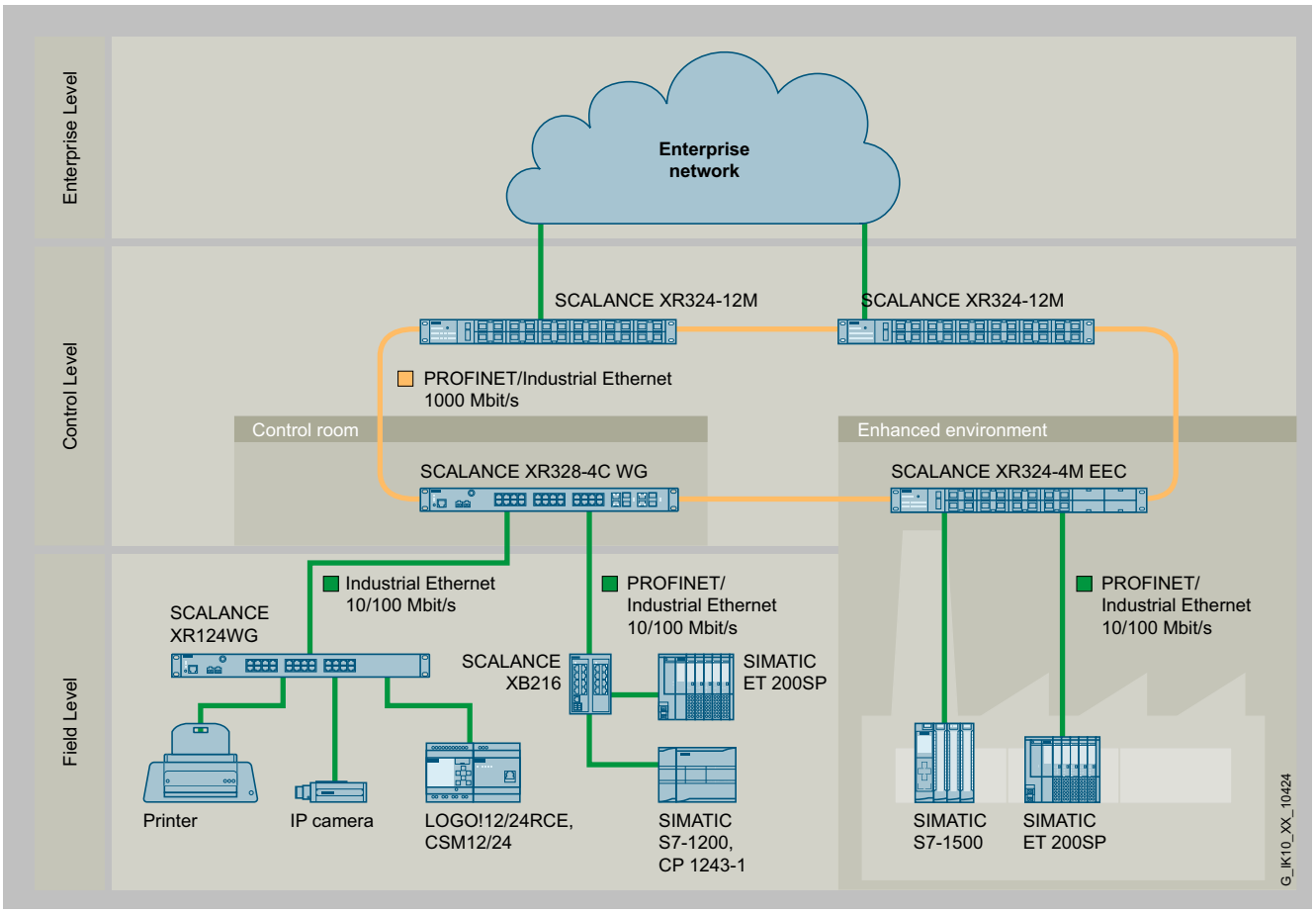

Cost-optimized and functionally adapted managed and unmanaged 19" rack switches for control rooms

© Siemens AG 2024

Integration (continued)

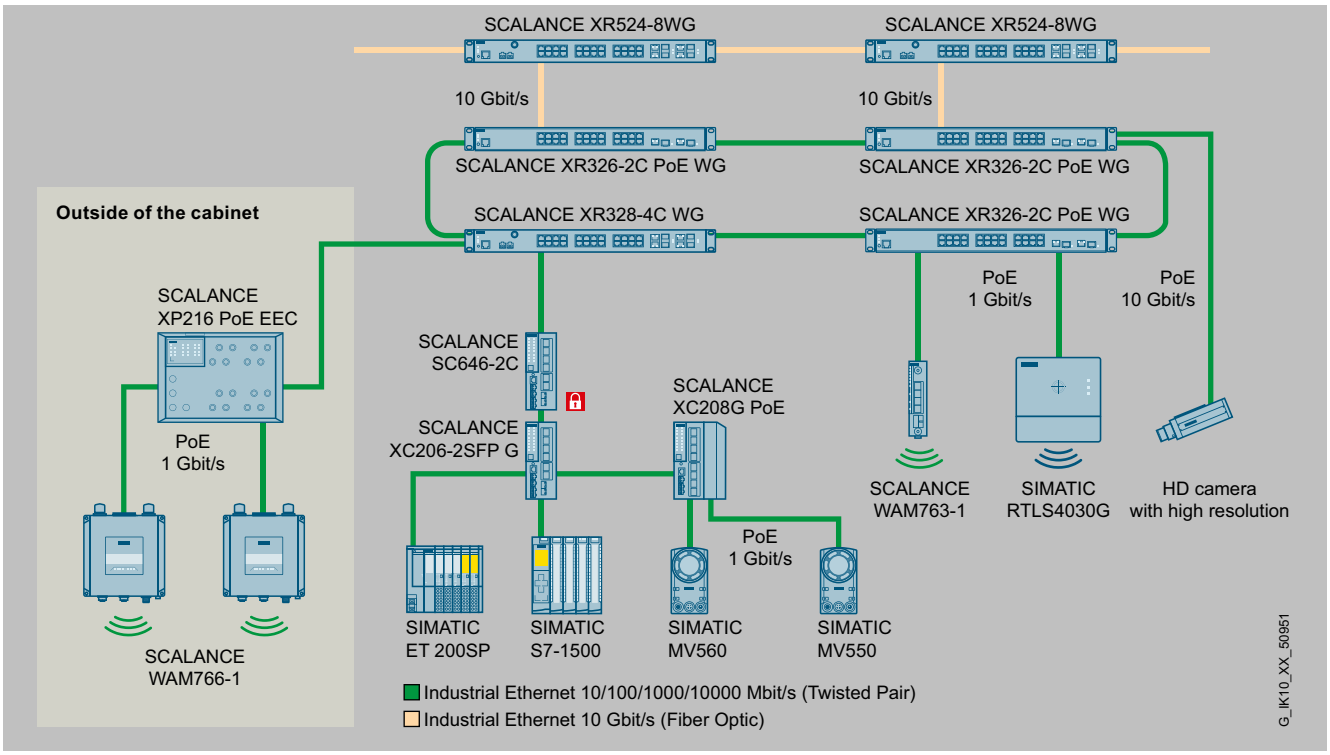

Supply of data and power to PoE-enabled terminal devices via SCALANCE XR326-2C PoE WG (Power over Ethernet).

© Siemens AG 2024

Integration (continued)

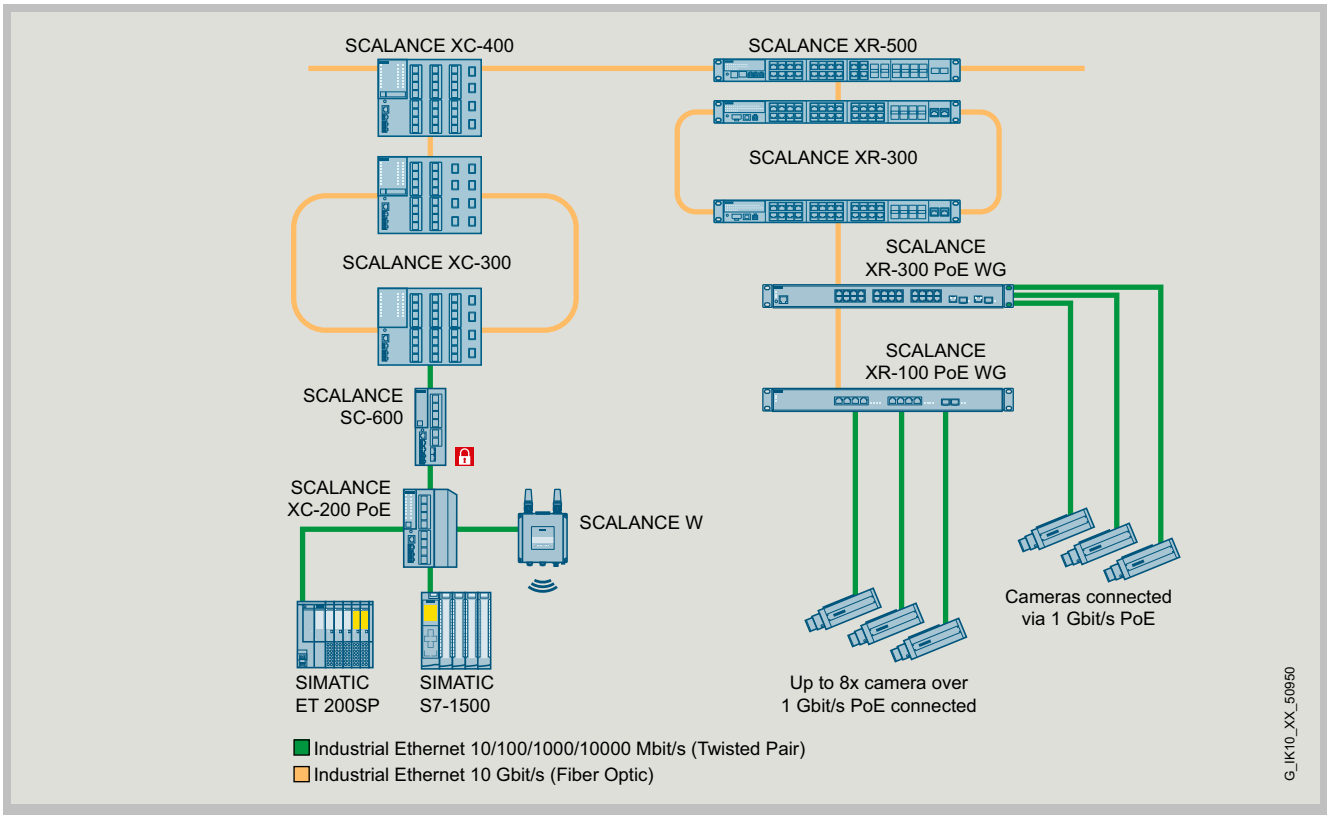

Up to 10 Gbps bandwidth for demanding applications with SCALANCE XR326-2C PoE WG

© Siemens AG 2024

Selection and ordering data

	Article No.
SCALANCE XR-300WG Industrial Ethernet switches 19" Industrial Ethernet switches for setting up electrical and/or optical Industrial Ethernet networks; depending on the device version, ports support 10/100 Mbps or 10/100/1000 Mbps Ethernet (non-blocking), integrated redundancy manager, RSTP, RMON, IGMP Snooping/Querier, network management via SNMP, PROFINET, and web server	
SCALANCE XR324WG	
• With 24 × 10/100 Mbps ports and redundant 24 V DC power supply	6GK5324-0BA00-2AR3
• With 24 × 10/100 Mbps ports and 230 V AC power supply	6GK5324-0BA00-3AR3
SCALANCE XR328-4C WG	
• With 24 × 10/100 Mbps ports, 4 × combo ports and redundant 24 V DC power supply	6GK5328-4FS00-2AR3
• With 24 × 10/100 Mbps ports, 4 × combo ports and 230 V AC power supply	6GK5328-4FS00-3AR3
SCALANCE XR328-4C WG	
• With 24 × 10/100 Mbps ports, 4 x combo ports and redundant 24 V DC power supply Reduced number of approvals (no UL/FM approval)	6GK5328-4FS00-2RR3
• With 24 × 10/100 Mbps ports, 4 × combo ports and 230 V AC power supply Reduced number of approvals (no UL/FM approval)	6GK5328-4FS00-3RR3
SCALANCE XR328-4C WG	
• With 24 × 10/100/1000 Mbps ports, 4 x combo ports and redundant 24 V DC power supply	6GK5328-4SS00-2AR3
• With 24 × 10/100/1000 Mbps ports, 4 x combo ports and 230 V AC power supply	6GK5328-4SS00-3AR3
SCALANCE XR326-2C PoE WG	
• With 24 x 10/100/1000 Mbps PoE ports (30 W), 2 x combo PoE port (max. 60 W at the RJ45 port, 1G/10G at the SFP+ port) and 100 - 240 V AC power supply	6GK5326-2QS00-3AR3
• With 24 x 10/100/1000 Mbps PoE ports (30 W), 2 x combo PoE port (max. 60 W at the RJ45 port, 1G/10G at the SFP+ port) and 100 - 240 V AC power supply (No UL/FM approval)	6GK5326-2QS00-3RR3

Accessories

	Article No.
Plug-in transceivers – SFPs	See "Plug-in transceivers for SCALANCE"
Power supply unit	
SCALANCE PS598-1 power supply Power supply 300 W Input: 85-264 V AC IEC plug; output: 24 V DC terminals or for direct connection to SCALANCE XR-300WG	6GK5598-1AA00-3AA0
SCALANCE PSR9230PoE Rack PoE power supply with Input 110-240 V AC, Output 54 V DC	6GK5923-0PS00-2RA3
Small Form-Factor Pluggable (SFP) SFPs with LC connection for use in SCALANCE XR108-2PoE WG; glass fiber-optic SFPs in single-mode and multimode, 1000 or 10000 Mbps	
• SFP993-1, 1x 10 Gbps, multimode	6GK5993-1AT00-8AA0
• SFP993-1LD, 1x 10 Gbps, single-mode	6GK5993-1AU00-8AA0
• SFP993-1LH, 1x 10 Gbps, single-mode	6GK5993-1AV00-8AA0
• Preassembled IE cable with 2x SFPs, 1 m	6GK5980-3CB00-0AA1
• Preassembled IE cable with 2x SFPs, 2 m	6GK5980-3CB00-0AA2
• Preassembled IE cable with 2x SFPs, 3 m	6GK5980-3CB00-0AA7
See accessories for XR108-2PoE WG for further 1 Gbps SFPs	
IE FC RJ45 plug 180 2 x 2 Industrial Ethernet FastConnect RJ45 plug 180 2x2, RJ45 connector (10/100 Mbps) with rugged metal enclosure and FC connection technology, for IE FC cable 2x2 180° cable outlet 1 pack = 1 unit	6GK1901-1BB10-2AA0
IE FC RJ45 plug 4 x 2 RJ45 plug-in data connector (10/100/1000 Mbps), for connection to IE FC TP cables 4x2, with rugged metal enclosure and FastConnect connection technology	6GK1901-1BB11-2AA0
IE FC TP standard cable GP 2 x 2 (type A) 4-core, shielded TP installation cable for connection to IE FC RJ45 outlet/IE FC RJ45 plug; PROFINET-compatible; with UL approval; sold by the meter; max. delivery unit 1000 m, minimum order quantity 20 m, also available as preassembled cable with RJ45 plugs in various lengths	6XV1840-2AH10

© Siemens AG 2024

Accessories (continued)

	Article No.
IE FC TP standard cable GP 4 x 2 TP installation cable Cat6 for connecting to IE FC RJ45 plug 4x2, AWG 24 sold by the meter; max. delivery unit 1000 m; minimum order quantity 20 m, also available preassembled with RJ45 plugs in various lengths	6XV1878-2A
FO standard cable GP 50/125/1400 Multimode cable, sold by the meter; max. delivery unit 1000 m, minimum order quantity 20 m, also available preassembled with ST/BFOC, SC and LC connectors in various lengths	6XV1873-2A
SCALANCE TAP104 Test access port for the reaction-free extraction of Ethernet data frames (10/100 Mbps) from both transmission directions; extracts complete data traffic (including faulty diagrams) for further diagnostics	6GK5104-0BA00-1SA2

© Siemens AG 2024

Technical specifications

Article number	6GK5328-4FS00-2RR3	6GK5328-4FS00-3RR3	6GK5328-4SS00-2AR3	6GK5328-4SS00-3AR3
product type designation				
product brand name	SCALANCE	SCALANCE	SCALANCE	SCALANCE
product type designation	XR328-4C WG	XR328-4C WG	XR328-4C WG	XR328-4C WG
transfer rate				
transfer rate	10 Mbit/s, 100 Mbit/s, 1 000 Mbit/s	10 Mbit/s, 100 Mbit/s, 1 000 Mbit/s	10 Mbit/s, 100 Mbit/s, 1 000 Mbit/s	10 Mbit/s, 100 Mbit/s, 1 000 Mbit/s
interfaces for communication integrated				
number of electrical connections				
• for network components or terminal equipment	28; RJ45	28; RJ45	28; RJ45	28; RJ45
number of 10/100 Mbit/s RJ45 ports	24	24		
number of 10/100/1000 Mbit/s RJ45 ports			24	24
number of combo ports with RJ45 interface for optical plug-in transceiver	4; 1000 Mbit/s SFP plug-in transceiver or 100 Mbit/s via SCALANCE SFP991-1 (LD) A	4; 1000 Mbit/s SFP plug-in transceiver or 100 Mbit/s via SCALANCE SFP991-1 (LD) A	4; 1000 Mbit/s SFP plug-in transceiver or 100 Mbit/s via SCALANCE SFP991-1 (LD) A	4; 1000 Mbit/s SFP plug-in transceiver or 100 Mbit/s via SCALANCE SFP991-1 (LD) A
interfaces other				
number of electrical connections				
• for operator console	1	1	1	1
• for power supply	1	1	1	1
type of electrical connection				
• for power supply	2 x 2-pin terminal block	IEC plug C14	2 x 2-pin terminal block	IEC plug C14
supply voltage, current consumption, power loss				
product component connection for redundant voltage supply		Yes	Yes	Yes
type of voltage supply redundant power supply unit	No	No	No	No
type of voltage 1 of the supply voltage	DC	AC	DC	AC
• supply voltage 1 rated value	24 V	240 V; 100V ... 240V AC	24 V	240 V; 100V ... 240V AC
• power loss [W] 1 rated value	12 W	46 W	21.6 W	27 W
• supply voltage 1 rated value	19.2 ... 28.8 V	85 ... 264 V	19.2 ... 28.8 V	85 ... 264 V
• consumed current 1 maximum	0.5 A	0.15 A	0.9 A	0.27 A
• type of electrical connection 1 for power supply	2 x 2-pole terminal block	IEC plug C14	2 x 2-pole terminal block	IEC plug C14
• product component 1 fusing at power supply input	Yes	Yes	Yes	Yes
• fuse protection type 1 at input for supply voltage	F 5 A / 60 V	F 4 A / 250 V	F 5 A / 60 V	F 4 A / 250 V
ambient conditions				
ambient temperature				
• during operation	0 ... 60 °C	0 ... 60 °C	0 ... 60 °C	0 ... 60 °C
• during storage	-40 ... +85 °C	-40 ... +85 °C	-40 ... +85 °C	-40 ... +85 °C
• during transport	-40 ... +85 °C	-40 ... +85 °C	-40 ... +85 °C	-40 ... +85 °C
relative humidity				
• at 25 °C without condensation during operation maximum	95 %	95 %	95 %	95 %
protection class IP	IP30	IP30	IP30	IP30
design, dimensions and weights				
design	19" rack	19" rack	19" rack	19" rack
number of modular height units relating to 19-inch cabinet	1	1	1	1
width	483 mm	483 mm	483 mm	483 mm
height	44 mm	44 mm	44 mm	44 mm
depth	127 mm	177 mm	127 mm	177 mm

© Siemens AG 2024

Technical specifications (continued)

Article number	6GK5328-4FS00-2RR3	6GK5328-4FS00-3RR3	6GK5328-4SS00-2AR3	6GK5328-4SS00-3AR3
net weight	2.8 kg	3.4 kg	2.8 kg	3.4 kg
material of the enclosure	metal	metal	metal	metal
fastening method				
• 19-inch installation	Yes	Yes	Yes	Yes
• 35 mm top hat DIN rail mounting	No	No	No	No
• wall mounting	No	No	No	No
• S7-300 rail mounting	No	No	No	No
• S7-1500 rail mounting	No	No	No	No
product features, product functions, product components general				
cascading in the case of a redundant ring at reconfiguration time of <\~0.3\~s	50	50	50	50
cascading in cases of star topology	any (depending only on signal propagation time)	any (depending only on signal propagation time)	any (depending only on signal propagation time)	any (depending only on signal propagation time)
product functions management, configuration, engineering				
product function				
• CLI	Yes	Yes	Yes	Yes
• web-based management	Yes	Yes	Yes	Yes
• MIB support	Yes	Yes	Yes	Yes
• TRAPs via email	Yes	Yes	Yes	Yes
• configuration with STEP 7	Yes	Yes	Yes	Yes
• RMON	Yes	Yes	Yes	Yes
• port mirroring	Yes	Yes	Yes	Yes
• multiport mirroring	No	No	No	No
• CoS	Yes	Yes	Yes	Yes
• PROFINET IO diagnosis	Yes	Yes	Yes	Yes
• switch-managed	Yes	Yes	Yes	Yes
PROFINET conformity class	B	B	B	B
network load class according to PROFINET	2	2	2	2
protocol is supported				
• Telnet	Yes	Yes	Yes	Yes
• HTTP	Yes	Yes	Yes	Yes
• HTTPS	Yes	Yes	Yes	Yes
• TFTP	Yes	Yes	Yes	Yes
• FTP	Yes	Yes	Yes	Yes
• BOOTP	Yes	Yes	Yes	Yes
• GMRP	No	No	No	No
• DCP	Yes	Yes	Yes	Yes
• LLDP	Yes	Yes	Yes	Yes
• SNMP v1	Yes	Yes	Yes	Yes
• SNMP v2	Yes	Yes	Yes	Yes
• SNMP v3	Yes	Yes	Yes	Yes
• IGMP (snooping/querier)	Yes	Yes	Yes	Yes
identification & maintenance function				
• I&M0 - device-specific information	Yes	Yes	Yes	Yes
• I&M1 - higher level designation/location designation	Yes	Yes	Yes	Yes
product functions diagnostics				
product function				
• port diagnostics	Yes	Yes	Yes	Yes

© Siemens AG 2024

Technical specifications (continued)

Article number	6GK5328-4FS00-2RR3	6GK5328-4FS00-3RR3	6GK5328-4SS00-2AR3	6GK5328-4SS00-3AR3
• statistics Packet Size	Yes	Yes	Yes	Yes
• statistics packet type	Yes	Yes	Yes	Yes
• error statistics	Yes	Yes	Yes	Yes
• SysLog	Yes	Yes	Yes	Yes
product functions VLAN				
product function				
• VLAN - port based	Yes	Yes	Yes	Yes
• VLAN - protocol-based	No	No	No	No
• VLAN - IP-based	No	No	No	No
• VLAN dynamic	Yes	Yes	Yes	Yes
number of VLANs maximum	257	257	257	257
number of VLANs - dynamic maximum	257	257	257	257
number of VLANs at ring redundancy (HRP; MRP; standby link)	257	257	257	257
product functions DHCP				
product function				
• DHCP client	Yes	Yes	Yes	Yes
• DHCP Option 82	Yes	Yes	Yes	Yes
• DHCP Option 66	Yes	Yes	Yes	Yes
• DHCP Option 67	Yes	Yes	Yes	Yes
product functions redundancy				
protocol is supported Media Redundancy Protocol (MRP)	Yes	Yes	Yes	Yes
product function				
• media redundancy protocol (MRP) with redundancy manager	Yes	Yes	Yes	Yes
• ring redundancy	Yes	Yes	Yes	Yes
• high speed redundancy protocol (HRP) with redundancy manager	Yes	Yes	Yes	Yes
• high speed redundancy protocol (HRP) with standby redundancy	Yes	Yes	Yes	Yes
• redundancy procedure STP	Yes	Yes	Yes	Yes
• redundancy procedure RSTP	Yes	Yes	Yes	Yes
• redundancy procedure MSTP	No	No	No	No
• Parallel Redundancy Protocol (PRP)/operation in the PRP-network	Yes	Yes	Yes	Yes
• Parallel Redundancy Protocol (PRP)/Redundant Network Access (RNA)	No	No	No	No
• passive listening	Yes	Yes	Yes	Yes
protocol is supported				
• STP/RSTP	Yes	Yes	Yes	Yes
• STP	Yes	Yes	Yes	Yes
• RSTP	Yes	Yes	Yes	Yes
• MSTP	No	No	No	No
• RSTP big network support	Yes	Yes	Yes	Yes
• LACP	No	No	No	No
product functions security				
product function				
• IEEE 802.1x (radius)	Yes	Yes	Yes	Yes
• broadcast/multicast/unicast limiter	Yes	Yes	Yes	Yes
• broadcast blocking	Yes	Yes	Yes	Yes
protocol is supported				

© Siemens AG 2024

Technical specifications (continued)

Article number	6GK5328-4FS00-2RR3	6GK5328-4FS00-3RR3	6GK5328-4SS00-2AR3	6GK5328-4SS00-3AR3
• SSH	Yes	Yes	Yes	Yes
product functions time				
product function				
• SICLOCK support	Yes	Yes	Yes	Yes
protocol is supported				
• NTP	Yes	Yes	Yes	Yes
• SNTP	Yes	Yes	Yes	Yes
• IEEE 1588 profile default	No	No	No	No
standards, specifications, approvals				
certificate of suitability				
• CE marking	Yes	Yes	Yes	Yes
• KC approval	Yes	Yes	Yes	Yes
• Regulatory Compliance Mark (RCM)	Yes	Yes	Yes	Yes
standard				
• for safety from CSA and UL			UL 60950-1, CSA C22.2 No. 60950-1, UL 61010-2-201	UL 60950-1, CSA C22.2 No. 60950-1
standards, specifications, approvals hazardous environments				
certificate of suitability				
• ATEX			Yes	
• UKEX			Yes	
• IECEx			Yes	
• ULhazloc approval			Yes	
• CCC for hazardous zone according to GB standard			Yes	
• FM registration			Yes	
standards, specifications, approvals other				
certificate of suitability				
• railway application in accordance with EN 50155	No	No	No	No
• RoHS conformity	Yes	Yes	Yes	Yes
IT security for industrial automation systems according to IEC 62443-4-2:2019	Yes	Yes	Yes	Yes
standards, specifications, approvals Environmental Product Declaration				
Environmental Product Declaration	Yes	Yes	Yes	Yes
Global Warming Potential [CO2 eq]				
• total	438.45 kg	520.66 kg	701.51 kg	849.48 kg
• during manufacturing	109.07 kg	109.07 kg	109.07 kg	109.07 kg
• during operation	328.83 kg	411.04 kg	591.89 kg	739.86 kg
• after end of life	0.55 kg	0.55 kg	0.55 kg	0.55 kg
product functions general				
MTBF	43 a	39 a	43 a	39 a
reference code				
• according to IEC 81346-2	KF	KF	KF	KF
• according to IEC 81346-2:2019	KFE	KFE	KFE	KFE
Warranty period	5 a	5 a	5 a	5 a
further information internet links				
internet link				
• to website: Selection guide for cables and connectors	https://support.industry.siemens.com/cs/ww/en/view/109766-358	https://support.industry.siemens.com/cs/ww/en/view/109766-358	https://support.industry.siemens.com/cs/ww/en/view/109766-358	https://support.industry.siemens.com/cs/ww/en/view/109766-358

© Siemens AG 2024

Technical specifications (continued)

Article number	6GK5328-4FS00-2RR3	6GK5328-4FS00-3RR3	6GK5328-4SS00-2AR3	6GK5328-4SS00-3AR3
• to web page: selection aid TIA Selection Tool	https://www.siemens.com/tstcloud	https://www.siemens.com/tstcloud	https://www.siemens.com/tstcloud	https://www.siemens.com/tstcloud
• to website: Industrial communication	https://www.siemens.com/simatic-net	https://www.siemens.com/simatic-net	https://www.siemens.com/simatic-net	https://www.siemens.com/simatic-net
• to web page: SiePortal	https://sie-portal.siemens.com/	https://sie-portal.siemens.com/	https://sie-portal.siemens.com/	https://sie-portal.siemens.com/
• to website: Image database	https://www.automation.siemens.com/bilddb	https://www.automation.siemens.com/bilddb	https://www.automation.siemens.com/bilddb	https://www.automation.siemens.com/bilddb
• to website: CAx-Download-Manager	https://www.siemens.com/cax	https://www.siemens.com/cax	https://www.siemens.com/cax	https://www.siemens.com/cax
• to website: Industry Online Support	https://support.industry.siemens.com	https://support.industry.siemens.com	https://support.industry.siemens.com	https://support.industry.siemens.com

More information

Selection Tool:

To support the selection of SCALANCE network components, the TIA Selection Tool is available at:

www.siemens.com/tst

Ordering overview:

You can find more information on the FastConnect range in the "Cabling technology for communication networks in industry" ordering overview.

© Siemens AG 2024

Overview

The Layer 3-enabled SCALANCE XR-500 Industrial Ethernet switches are modular, high-performance, industry-standard switches for the construction of electrical and optical line, ring and star topologies with data transfer rates of up to 10 Gbps, designed for installation in 19" control cabinets.

- Up to 10 electrical and/or optical interfaces with 10 Gbps and up to 48 electrical and/or optical interfaces with 10/100/1000 Mbps
- Fast media redundancy due to the integrated redundancy manager:

  Redundant connection of rings by means of high-speed media redundancy is also possible with SCALANCE XR-500.
- Seamless integration of automation networks into existing corporate networks thanks to support for a host of IT standard functions (VLANs, IGMP Snooping/Query, STP/RSTP/MSTP, Link Aggregation, Quality of Service, IEEE 802.1X and optional static routing, RIP, OSPF, VRRP)
- Integrated system diagnostics over PROFINET, web browser, CLI, SINEMA Server or SINEC NMS and SNMP
- KEY-PLUG as the removable data storage medium for enabling Layer 3 routing functions.
  - For the automatic backup of configuration data. If a fault occurs, it allows fast and simple device replacement of SCALANCE XR-500 components without a Field PG (contains the function of the C-PLUG)
  - Can be used in all Layer 2 variants of SCALANCE XR-500
  - For a detailed description, see "SCALANCE Accessories for Layer 3 Switches/Routers"

Product variants

SCALANCE XR552-12M

- LEDs and ports on the front
- Alternatively: LEDs on the front and ports at the rear
- Connection of power supply unit at rear or above/below the switch
- Four SFP+ slots for equipping with 10 Gigabit Ethernet SFP+ plug-in transceivers, IE connecting cable SFP+/SFP+ or Gigabit SFP plug-in transceivers
- 12x 4-port media module slots
- Available with integrated IP routing functions or for optional extension of IP routing functions by means of KEY-PLUG

Overview (continued)

SCALANCE XR528-6M

- LEDs and ports on the front
- Alternatively: LEDs on the front and ports at the rear
- Connection of power supply unit at rear or above/below the switch
- Four SFP+ slots for equipping with 10 Gigabit Ethernet SFP+ plug-in transceivers, IE connecting cable SFP+/SFP+ or Gigabit SFP plug-in transceivers
- 6x 4-port media module slots
- Available with integrated IP routing functions or for optional extension of IP routing functions by means of KEY-PLUG

SCALANCE XR526-8C

- Two SFP+ slots for equipping with 10 Gigabit Ethernet SFP+ plug-in transceivers, IE connecting cable SFP+/SFP+ or Gigabit SFP plug-in transceivers
- Eight combo ports for optional use of optical or electrical interfaces with 10/100/1000 Mbps optically or electrically via SFP plug-in transceiver
- 16 electrical ports operating at 10/100/1000 Mbps
- In total, 26 ports can be used
- Power supply versions 24 V DC and 110 - 240 V AC (integrated)
- Available with integrated IP routing functions or for optional extension of IP routing functions by means of KEY-PLUG

SCALANCE XR524-8C

- Eight combo ports for optional use of optical or electrical interfaces with 10/100/1000 Mbps optically or electrically via SFP plug-in transceiver
- 16 electrical ports operating at 10/100/1000 Mbps
- In total, 24 ports can be used
- Power supply versions 24 V DC and 110 ... 240 V AC (integrated)
- Available with integrated IP routing functions or for optional extension of IP routing functions by means of KEY-PLUG

SCALANCE XR526-8

- Eight optical SFP+ ports for 1000 Mbps or 10000 Mbps plug-in transceiver
- 24 electrical ports operating at 10/100/1000 Mbps
- 2 electrical ports with 1000/2500/5000/10000 Mbps
- In total, 34 ports can be used
- Power supply versions 24 V DC and 110 ... 240 V AC (integrated)

SCALANCE XR522-12

- Eight optical SFP+ ports for 1000 Mbps or 10000 Mbps plug-in transceiver
- Four optical SFP ports for 100 Mbps or 1000 Mbps plug-in transceiver
- 20 electrical ports operating at 10/100/1000 Mbps
- 2 electrical ports with 1000/2500/5000/10000 Mbps
- In total, 34 ports can be used
- Power supply versions 24 V DC and 110 ... 240 V AC (integrated)

© Siemens AG 2024

Overview (continued)

SCALANCE XR502-32

- Eight optical SFP+ ports for 1000 Mbps or 10000 Mbps plug-in transceiver
- 24 optical SFP ports for 100 Mbps or 1000 Mbps plug-in transceiver
- 2 electrical ports with 1000/2500/5000/10000 Mbps
- In total, 34 ports can be used
- Power supply versions 24 V DC and 110 ... 240 V AC (integrated)

Benefits

get Designed for Industry

- Unlimited flexibility during network expansions (e.g. more terminals, higher data transmission rates) or modification (e.g. switching from copper to fiber-optic cable) and reduction of the storage costs due to the fully modular construction using SFPplus/SFP and media modules
- Retrofitting the Layer 3 switching functions (IP routing) by means of a license on KEY-PLUG without replacing the existing hardware (XR524-8C, XR526-8C, XR528-6M, XR552-12M only)
- Changing the media modules during operation
- High availability of the network thanks to:
  - Redundant power supply
  - Redundant network structures based on fiber-optic or twisted pair cables (redundancy manager, standby function and STP/RSTP/MSTP integrated)
  - Easy device replacement by means of C-PLUG/KEY-PLUG/CLP removable data storage medium
  - Extremely fast network reconfiguration in the event of a fault
- High flexibility thanks to variable mounting options of the power supply unit and device variants with ports on either the front or rear of the device.
- Integration into the SINEMA Server or SINEC NMS network management system for integrated network diagnostics with central firmware management

Application

The SCALANCE XR-500 switches are ideal for use in industrial networks and for integrating the industrial network into an existing corporate network. From the control level to the management level, the switch handles the networking of plant sections as well as distributed field devices and ensures high plant availability with extensive diagnostics options and high transmission speeds. Thanks to the scalability of the basic unit and the optionally available Layer 3 switching function, the network can be established specially for the relevant application, and adapted and expanded at any time.

The SCALANCE XR-500 switches are suitable for establishing electrical and optical Industrial Ethernet line, star or ring topologies, some with integral SFP+ slots that can be optionally equipped with SFP+ plug-in transceivers (10 Gbps) or SFP plug-in transceivers (1000 Mbps), and up to 12 media module slots that can be optionally equipped with electrical and/or optical 4-port media modules. Thanks to data transfer rates of up to 10 Gbps, the switches can be used as an Industrial Ethernet backbone switch and as a hub in the plant bus (redundant connection possible).

The use of media modules or SFP+/SFP enables the following:

- Extension of networks by subsequent insertion of additional media modules in unused media module slots
- Changing of cabling technology, e.g. conversion from copper to fiber-optic cables, or from multimode to single-mode FOC
- Changing of the data transfer rate, e.g. from 1000 Mbps to 10 Gbps

© Siemens AG 2024

Design

The SCALANCE XR-500 Industrial Ethernet switches with a rugged metal enclosure in IP20 degree of protection are optimized for installation in the 19" control cabinet. The power supply unit (85 to 264 V AC) for power supply to the SCALANCE XR-500, which is also optimized for the 19" cabinet, can either be installed directly at the rear of the SCALANCE XR-500 (XR528-6M and XR552-12M only) or connected using connecting cables (installation of the power supply unit in a 19" rack).

The switches also feature:

- IEC plug for direct connection to 230 V AC supply (depending on device variant)
- 2-pin terminal block for connecting the floating signaling contact for simple display of faults
- Row of LEDs for indicating status information (power, link status, data traffic, power supply, signaling contact)
- SELECT/SET button for easy setting of the fault signaling contact on the device
- Slot on the device for the C-PLUG/CLP removable data storage medium for easy device replacement in the event of a fault, or for the KEY-PLUG for adding IP routing to the device functionality (XR524-8C, XR526-8C, XR528-6M, XR552-12M only)
- Console port for local configuration/diagnostics

The SCALANCE XR-500 switches are available with the following types of port depending on the device variant:

- Up to eight SFP+ slots for optical SFP+ or SFP plug-in transceivers (multimode and single-mode connections)
  - The SFP+ plug-in transceivers support 10 Gbps
  - The SFP plug-in transceivers support 1000 Mbps
- Up to 12 slots for electrical 4-port media modules or optical 4-port media modules for multimode or single-mode connections; the optical media modules are available in a variety of connection technologies
  - The RJ45 sockets are also available in industry-standard design with additional securing collars for connection of the Industrial Ethernet FC RJ45 plug 180
  - All electrical Ethernet interfaces support 10/100/1000 Mbps, all optical Ethernet interfaces support 100 or 1000 Mbps

Design (continued)

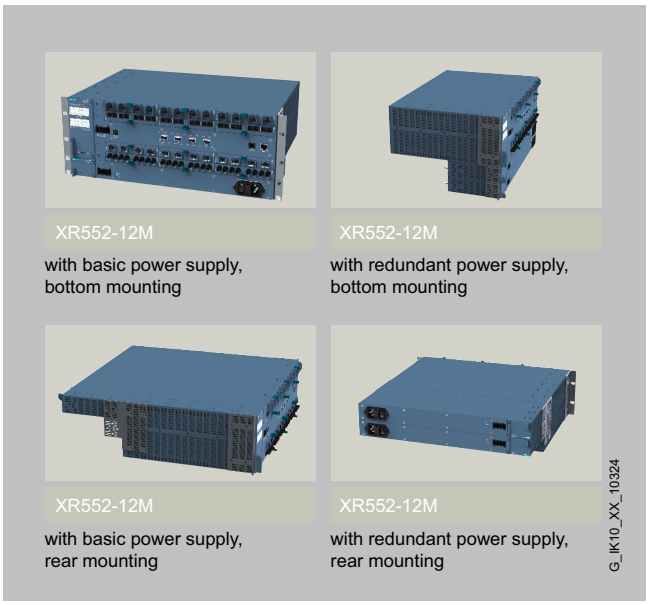

Options for mounting a single/redundant power supply unit to SCALANCE XR552-12M

© Siemens AG 2024

Function

- Integrated redundancy manager for constructing ring topologies with up to 10 Gbps and high-speed media redundancy. Reliable communication can be achieved by interconnecting the ends of an optical or electrical line to form a ring. The redundancy manager (RM) integrated in the SCALANCE XR-500 switch monitors the function of the network. It recognizes the failure of a transmission link or of a SCALANCE X switch in the ring and activates a substitute path within a maximum of 200 milliseconds.
- Redundant Layer 2 interfacing to corporate networks;

  SCALANCE XR-500 switches support the standardized redundancy procedures Multiple Spanning Tree Protocol (MSTP), Rapid Spanning Tree Protocol (RSTP), and Spanning Tree Protocol (STP). This enables a subnet to be connected redundantly to a higher-level corporate network with reduced requirements for the reconfiguration time (in the order of seconds).
- Layer 3 switching functions enable simple subdivision of large networks into smaller subnets with their own address space. Reasons for subdivision into subnets can include separation of the Ethernet network to reduce the broadcast load, separation of sensitive areas from the main network, and subdivision of the network into logical working groups.
- Redundant Layer 3 connection to corporate networks;

  SCALANCE XR-500 switches support the standardized routing protocols Open Shortest Path First (OSPF) and Routing Information Protocol (RIP), and the standardized routing procedure Virtual Router Redundancy Protocol (VRRP). This means industrial, routed subnets can also be connected redundantly to a higher-level corporate network.
- Support of virtual networks (VLAN);

  for structuring Industrial Ethernet networks with a fast-growing number of nodes, a physically existing network can be divided into several virtual subnets. Port-based, protocol-based and IP-based VLANs are available for selection.
- Load limiting when multicast protocols (e.g. video transmission) are used;

  by learning the multicast receivers (IGMP Snooping, IGMP Querier), SCALANCE XR-500 switches can also filter multicast data traffic and therefore limit the load in the network. Multicast and broadcast traffic can be limited.
- Time synchronization;

  diagnostic messages (log table entries, emails) are time-stamped. Local time is standardized throughout the network by means of synchronization with a SICLOCK time transmitter or SNTP/NTP server, thereby simplifying the assignment of diagnostic messages from multiple devices.
- Link Aggregation (IEEE 802.3ad) for bundling data streams
- Quality of Service (IEEE 802.1Q) for prioritization of network traffic

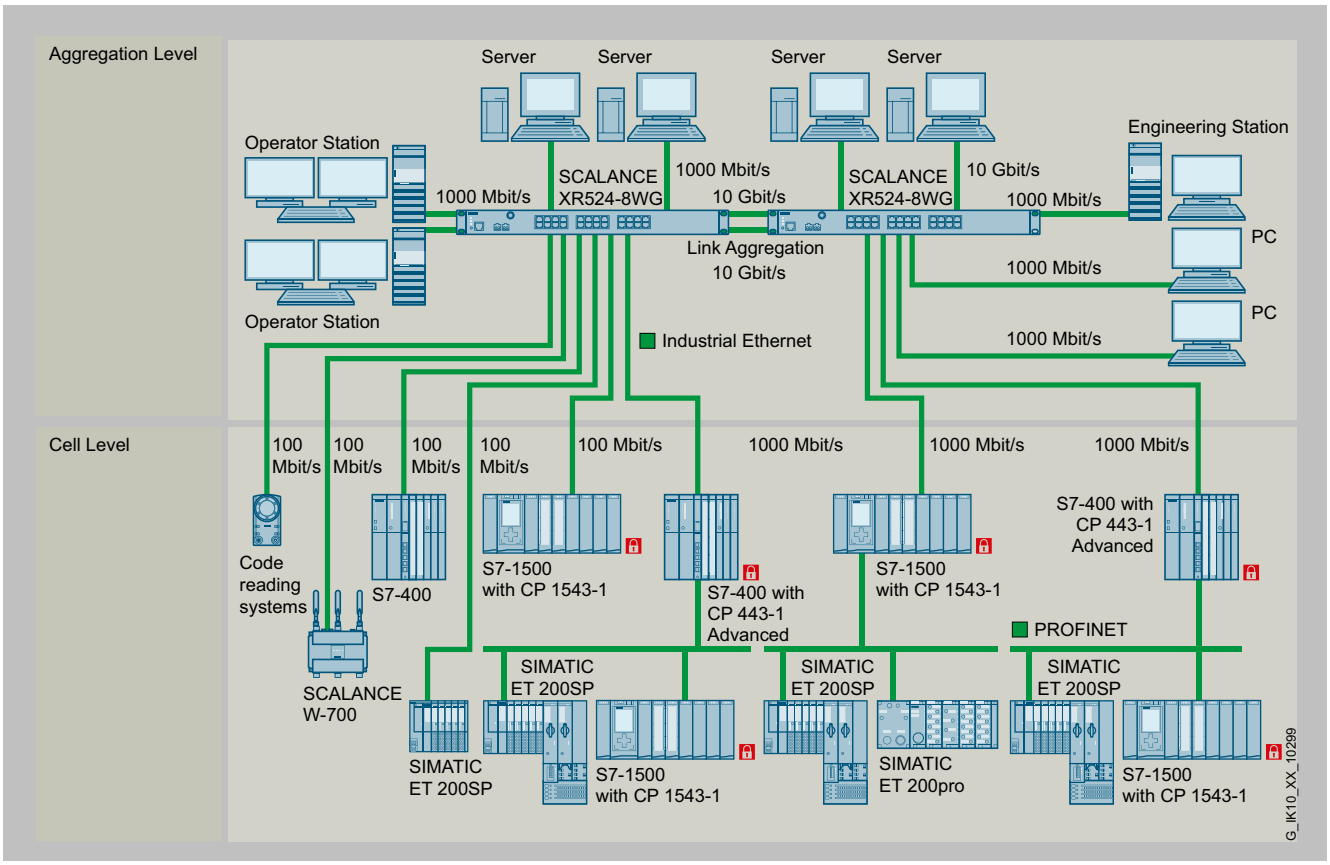

© Siemens AG 2024

Function (continued)

Integration of field-level networks to higher-level control networks with SCALANCE XR-500

Network topology and network configuration

The network topology can easily be adapted to the structure of the plant using SCALANCE XR-500 Industrial Ethernet switches.

The following network structures and combinations of structures can be implemented:

- Ethernet with fast media redundancy;

  To increase network availability, as many as 50 linear cascaded XC-200, XC-300/XR-300, XM-400 or XR-500 switches can be configured into a ring.
- Several rings can be redundantly linked through the standby function or MRP interconnection
- Star topology with SCALANCE XR-500 switches:

  Each SCALANCE XR-500 switch represents a neutral point that can connect up to 52 nodes or subnets with each other electrically.

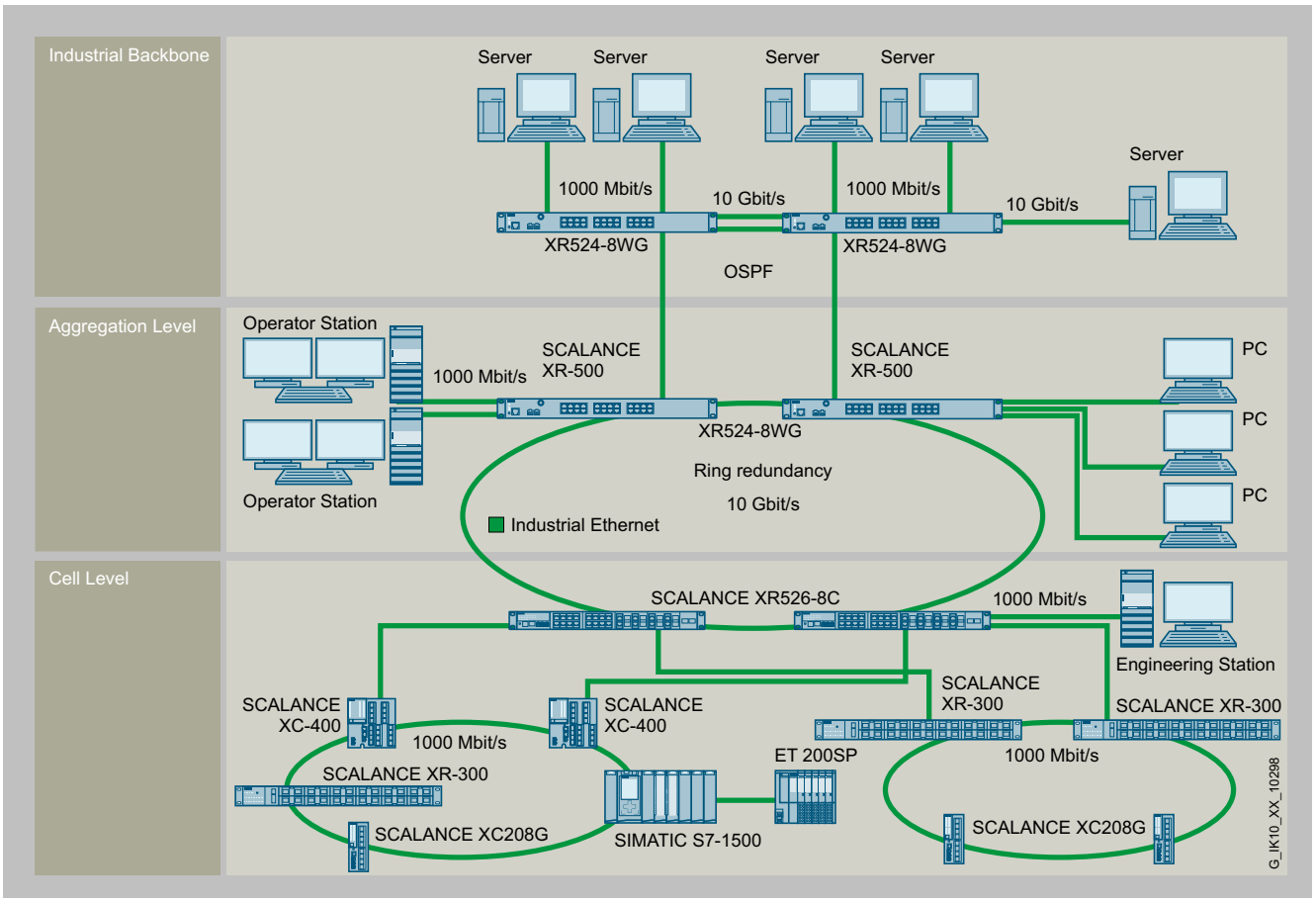

Use of SCALANCE XR-500 in redundant network topologies, e.g. with Rapid Spanning Tree Protocol (RSTP) and ring redundancy

When configuring the network, the following boundary conditions must be observed:

- Maximum cable length between two modules for multimode fiber-optic cables:
  - 5 km at 100 Mbps
  - 200 m at 1000 Mbps
  - 550 m at 10 Gbps
- Maximum cable length between two modules for single-mode fiber-optic conductors:
  - 26 to 200 km at 100 Mbps
  - 10 to 120 km at 1000 Mbps
  - 10 to 40 km at 10 Gbps

© Siemens AG 2024

Function (continued)

- Maximum cable length for twisted pair between two SCALANCE X switches:
  - Max. 100 m at 100 Mbps with IE FC cable 2 x 2 (Cat5e) and IE FC RJ45 plug 2x2
  - Max. 100 m at 1 Gbps with IE FC cable 4 x 2 (Cat6A) and IE FC RJ45 plug 4x2
  - Max. 75 m at 10 Gbps with IE FC cable 4x2 (Cat7) and IE FC RJ45 plug 4x2

Commissioning and diagnostics

Setting options on the device itself:

- Redundancy manager RM;

  to establish a ring, a SCALANCE XR-500 is switched to RM mode. The non-ring ports of the RM can be used freely for the connection of terminal devices and networks. If the MRP redundancy procedure standardized by PROFINET is used, the RM is adjusted automatically.
- Signal mask;

  The signal mask is set to the current status of the SCALANCE XR-500 (setpoint state) by pushbutton operation. The signal mask defines which ports and which power supplies are to be monitored. The signaling contact only reports an error when a monitored port or a monitored feeder fails (deviation of setpoint/actual status).
- IP address;

  the IP address is assigned via DHCP (Dynamic Host Configuration Protocol). If there is no corresponding server in the network, the IP address can be assigned using the software tool provided.

Diagnostic options on site:

- The following status information is displayed by LEDs on site:
  - Port status
  - Port operating mode (Mbps, full/half-duplex)
  - Status of the two power supplies
  - Signaling contact status
  - Signal mask (setpoint status)
  - RM mode
  - Standby mode
- Via the web browser of a mobile device (smartphone, tablet)
- The status of the signaling contact is routed externally by means of floating relay contacts. This enables, for example, the module to be monitored via an input module from a controller.
- Monitoring via the Industrial Ethernet network;

  the following possibilities are available:
  - Via standard web browser (web-based management):

    Selection of SCALANCE XR-500 switches via the network from a PC with a web browser
  - Via SNMP V1, V2c, V3:

    Secure integration of SCALANCE XR-500 switches via the network into a network management system, e.g. SINEC NMS
  - Via PROFINET diagnostics:

    PROFINET diagnostic interrupts from SCALANCE XR-500 switches can be displayed using the relevant SIMATIC engineering tools and they can also be processed in the PLC. The engineering outlay for the PLC and HMI has been drastically reduced due to the complete integration in the SIMATIC concept for system error messages.
  - Via the web browser of a mobile device (smartphone, tablet)

Network management

The network management provides the following functions:

- Password-protected dial-up for "Administrator" (read and write authorization) and "User" (read only)
- Read-out of version and status information
- Setting the signal and standby mask and address information
- Fixed parameterization of the ports (data transmission rates, half/full duplex) and filter tables
- Setting of Spanning/Rapid/Multiple Spanning Tree parameters
- Parameter assignment for web management services
- Security
  - Ports can be connected or disconnected
  - Port-based network access control according to IEEE 802.1X
  - Authentication in accordance with IEEE 802.1x
  - Support of Access Control List (ACL)
- Output of statistics information
- Diagnosis of data traffic by means of a parameterizable mirror port with a standard commercially available network analyzer (e.g. via Bus Analyzer Agent XM400)
- Loading of new firmware versions or configuration data via the network from a TFTP server or directly via HTTP/HTTPS with a web browser
- Saving of configuration data or log table via the network on a TFTP server

If faults occur in the network, the SCALANCE XR-500 switch can independently send error messages (traps) to a network management system, such as SINEMA Server or SINEC NMS, and emails to a predefined network administrator.

Remote monitoring (RMON) provides the following functions:
The SCALANCE XR-500 switch can collect statistics information according to the RMON groups 1 through 4. These include, for example, fault statistics that are kept for each port. This information can be read out through web-based management in the statistics sub-area.

© Siemens AG 2024

Function (continued)

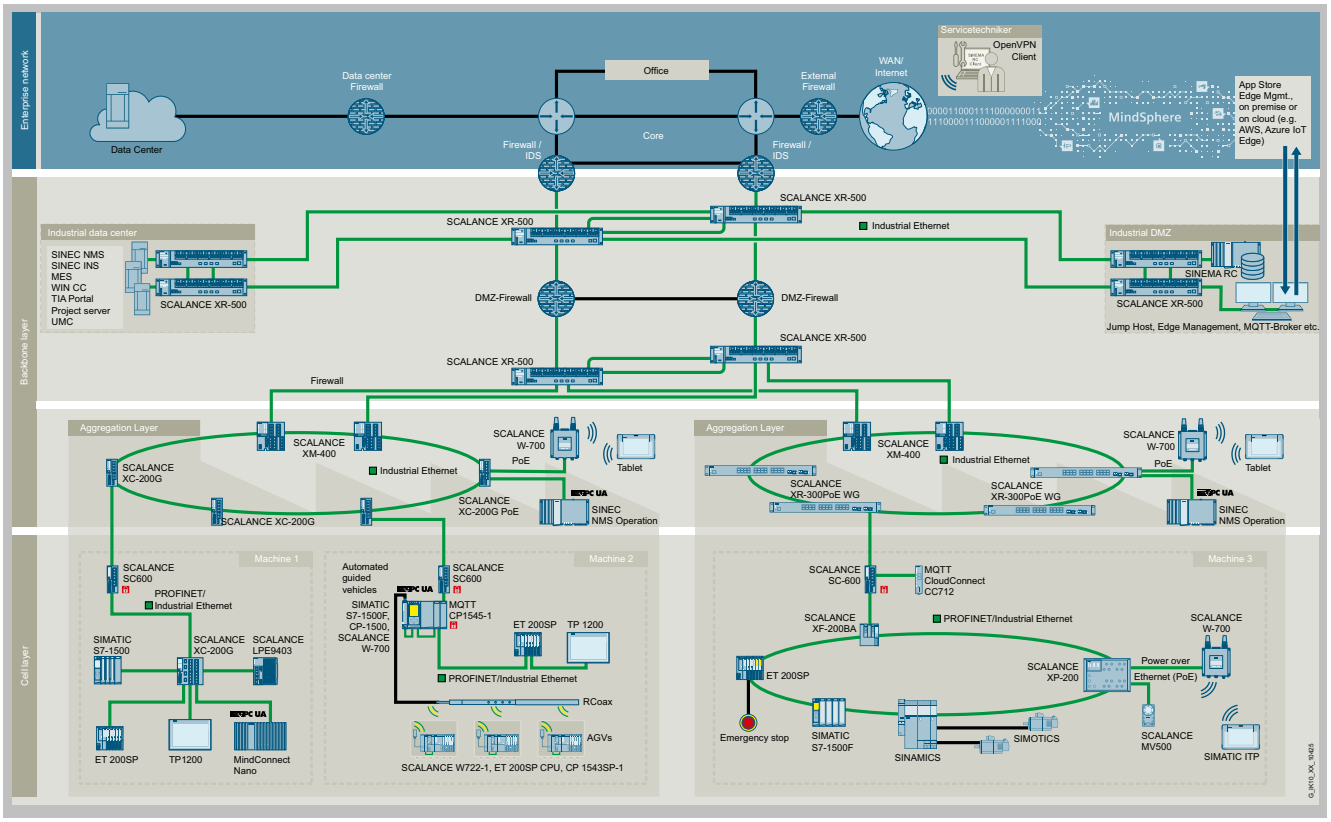

Connection of a production network to the office network with SCALANCE XR-500 Industrial Ethernet switches

© Siemens AG 2024

Selection and ordering data

	Article No.
SCALANCE XR-500 Industrial Ethernet switches	
Layer 3-enabled Industrial Ethernet switches for establishing electrical and/or optical Industrial Ethernet networks; with transfer rates up to 10 Gbps, designed for installation in 19" control cabinets	
SCALANCE XR552-12M	
4 x integral 1/10 Gbps SFP+ slots for SFP or SFP+ plug-in transceivers 12 x 10/100/1000 Mbps slots for 4-port media modules, electrical or optical	
Layer 2, upgrade to Layer 3 possible	
• Ports at front	6GK5552-0AA00-2AR2
• Ports at rear	6GK5552-0AA00-2HR2
Layer 3	
• Ports at front	6GK5552-0AR00-2AR2
• Ports at rear	6GK5552-0AR00-2HR2
SCALANCE XR528-6M	
4 x integral 1/10 Gbps SFP+ slots for SFP or SFP+ plug-in transceivers 6 x 10/100/1000 Mbps slots for 4-port media modules, electrical or optical	
Layer 2, upgrade to Layer 3 possible	
• Ports at front	6GK5528-0AA00-2AR2
• Ports at rear	6GK5528-0AA00-2HR2
Layer 3	
• Ports at front	6GK5528-0AR00-2AR2
• Ports at rear	6GK5528-0AR00-2HR2
SCALANCE XR526-8C	
2 x 10 Gbps 24 x 10/100/1000 Mbps, of which 8 x RJ45/SFP combo ports 24 x 1000 Mbps maximum use	
Layer 2, upgrade to Layer 3 possible	
• Redundant 24 V DC power supply	6GK5526-8GS00-2AR2
• 230 V AC power supply	6GK5526-8GS00-3AR2
• Redundant 230 V AC power supply	6GK5526-8GS00-4AR2
Layer 3	
• Redundant 24 V DC power supply	6GK5526-8GR00-2AR2
• 230 V AC power supply	6GK5526-8GR00-3AR2
• Redundant 230 V AC power supply	6GK5526-8GR00-4AR2
SCALANCE XR524-8C	
24 x 10/100/1000 Mbps, of which 8 x RJ45/SFP combo ports; 24 x 1000 Mbps maximum usable	
Layer 2, upgrade to Layer 3 possible	

Selection and ordering data (continued)

	Article No.
• Redundant 24 V DC power supply	6GK5524-8GS00-2AR2
• 230 V AC power supply	6GK5524-8GS00-3AR2
• Redundant 230 V AC power supply	6GK5524-8GS00-4AR2
Layer 3	
• Redundant 24 V DC power supply	6GK5524-8GR00-2AR2
• 230 V AC power supply	6GK5524-8GR00-3AR2
• Redundant 230 V AC power supply	6GK5524-8GR00-4AR2
SCALANCE XR526-8	
24 x 10/100/1000 Mbps RJ45 ports 8 x 1G/10Gbps SFP+ ports 2 x 1G/2.5G/5G/10Gbps RJ45 ports	
• 24 V DC power supply	6GK5534-2TR00-2AR3
• 24 V DC power supply	6GK5534-2TR00-3AR3
• 2 x 230 V AC power supply	6GK5534-2TR00-4AR3
SCALANCE XR522-12	
20 x 10/100/1000 Mbps RJ45 ports 8 x 1G/10Gbps SFP+ ports 4 x 100/1000 Mbps SFP ports 2 x 1G/2.5G/5G/10G RJ45 ports	
• 24 V DC power supply	6GK5534-3TR00-2AR3
• 230 V AC power supply	6GK5534-3TR00-3AR3
• 2 x 230 V AC power supply	6GK5534-3TR00-4AR3
SCALANCE XR502-32	
24 x 100/1000 Mbps SFP ports 8 x 1G/10Gbps SFP+ ports 2 x 1G/2.5G/5G/10Gbps RJ45 ports	
• 24 V DC power supply	6GK5534-5TR00-2AR3
• 230 V AC power supply	6GK5534-5TR00-3AR3
• 2 x 230 V AC power supply	6GK5534-5TR00-4AR3

© Siemens AG 2024

Accessories

	Article No.
SCALANCE PS598-1 power supply Power supply 300 W Input: 85-264 V AC IEC plug Output: 24 V DC terminals or for direct connection to SCALANCE X-500	6GK5598-1AA00-3AA0
FAN597-1 Replacement fan slide-in unit for SCALANCE XR552-12M	6GK5597-1AA00-8AA0
FAN597-2 Replacement fan slide-in unit for SCALANCE XR528-6M	6GK5597-2AA00-8AA0
SCALANCE RACK MOUNT KIT Mounting bracket for 19 inch rack installation for SCALANCE XR-300/XR-500; 1 pack = 4 units; spare part	GK5980-2BA00-0AA4
C-PLUG Removable data storage medium for simple replacement of devices in the event of a fault; for storing configuration or engineering and application data; can be used in SIMATIC NET products with C-PLUG slot	6GK1900-0AB10
KEY-PLUG X-500 Removable data storage medium for expansion of the device functions with IP routing (layer 3), for integration of configuration data and for easy replacement of SCALANCE X-500 in the event of a fault	6GK5905-0PA00
SCALANCE CLP Removable data storage medium for simple replacement of devices in the event of a fault; for storing configuration or engineering and application data; can be used in SIMATIC NET products with CLP slot	6GK1900-0UB00-0AA0
SCALANCE TAP104 Test access port for the reaction-free extraction of Ethernet data frames (10/100 Mbps) from both transmission directions; extracts entire data traffic (including faulty diagrams) for further diagnostics.	6GK5104-0BA00-1SA2
Media Modules	See "Media modules for modular SCALANCE X-500 managed"
Plug-in transceivers – SFPs	see "SCALANCE X-500 managed" Manual
IE FC RJ45 plug 4 x 2 RJ45 plug-in data connector (10/100/1000 Mbps), for connection to IE FC TP cables 4x2, with rugged metal enclosure and FastConnect connection technology	6GK1901-1BB12-2AA0
IE FC TP standard cable GP 4 x 2 TP installation cable Cat6 for connecting to IE FC RJ45 plug 4x2, AWG 24 sold by the meter; max. delivery unit 1000 m; minimum order quantity 20 m, also available preassembled with RJ45 plugs in various lengths	6XV1878-2A

Accessories (continued)

	Article No.
FO standard cable GP 50/125/1400 Multimode cable, sold by the meter; max. delivery unit 1000 m, minimum order quantity 20 m, also available preassembled with ST/BFOC, SC and LC connectors in various lengths	6XV1873-2A

© Siemens AG 2024

Technical specifications

Article number	6GK5552-0AA00-2AR2	6GK5552-0AR00-2AR2	6GK5528-0AA00-2AR2	6GK5528-0AR00-2AR2
product type designation				
product brand name	SCALANCE	SCALANCE	SCALANCE	SCALANCE
product type designation	XR552-12M	XR552-12M	XR528-6M	XR528-6M
transfer rate				
transfer rate	10 Mbit/s, 100 Mbit/s, 1 000 Mbit/s, 10 Gbit/s	10 Mbit/s, 100 Mbit/s, 1 000 Mbit/s, 10 Gbit/s	10 Mbit/s, 100 Mbit/s, 1 000 Mbit/s, 10 Gbit/s	10 Mbit/s, 100 Mbit/s, 1 000 Mbit/s, 10 Gbit/s
interfaces for communication integrated				
number of electrical connections				
• for network components or terminal equipment	RJ45	RJ45	RJ45	RJ45
• for Power-over-Ethernet for network components or terminal equipment	12	12	12	12
number of electrical connections				
• for SFP+	4	4	4	4
interfaces for communication plug-in				
number of 100 Mbit/s ST(BFOC) ports				
• for multimode	48	48	24	24
• for single mode (LD)	48	48	24	24
number of 1000 Mbit/s SC ports				
• for multimode	48	48	24	24
• for single mode (LD)	48	48	24	24
number of electrical connections				
• for SFP	4	4	4	4
• for SFP+	4	4	4	4
interfaces other				
number of electrical connections				
• for operator console	1	1	1	1
• for signaling contact	1	1	1	1
• for media module	12	12	6	6
• for power supply	1	1	1	1
type of electrical connection				
• for operator console	RJ11	RJ11	RJ11	RJ11
• for management purposes	RJ45	RJ45	RJ45	RJ45
• for signaling contact	2-pole terminal block	2-pole terminal block	2-pole terminal block	2-pole terminal block
• for power supply	4-pole terminal block	4-pole terminal block	4-pole terminal block	4-pole terminal block
product feature hot-swappable interface modules	Yes	Yes	Yes	Yes
operating voltage of the signaling contacts				
• at DC rated value	24 V	24 V	24 V	24 V
operational current of the signaling contacts				
• at DC maximum	0.1 A	0.1 A	0.1 A	0.1 A
supply voltage, current consumption, power loss				
product component connection for redundant voltage supply			Yes	
type of voltage supply redundant power supply unit	No	No	No	No
supplied active power of PSE with PoE				
• per port maximum	30 W	30 W	30 W	30 W
• total maximum	180 W	180 W	180 W	180 W
type of voltage 1 of the supply voltage	DC	DC	DC	DC
• supply voltage 1 rated value	24 V	24 V	24 V	24 V
• power loss [W] 1 rated value	34.08 W	34.08 W	22 W	22 W

© Siemens AG 2024

Technical specifications (continued)

Article number	6GK5552-0AA00-2AR2	6GK5552-0AR00-2AR2	6GK5528-0AA00-2AR2	6GK5528-0AR00-2AR2
• supply voltage 1 rated value	19.2 ... 28.8 V	19.2 ... 28.8 V	19.2 ... 28.8 V	19.2 ... 28.8 V
• consumed current 1 maximum	12.5 A	12.5 A	11.5 A	11.5 A
• type of electrical connection 1 for power supply	4-pole terminal block	4-pole terminal block	4-pole terminal block	4-pole terminal block
• product component 1 fusing at power supply input	Yes	Yes	Yes	Yes
• fuse protection type 1 at input for supply voltage	F 15 A / 125 V	F 15 A / 125 V	F 15 A / 125 V	F 15 A / 125 V
ambient conditions				
ambient temperature				
• during operation	0 ... 60 °C	0 ... 60 °C	0 ... 60 °C	0 ... 60 °C
• during storage	-40 ... +70 °C	-40 ... +70 °C	-40 ... +70 °C	-40 ... +70 °C
• during transport	-40 ... +70 °C	-40 ... +70 °C	-40 ... +70 °C	-40 ... +70 °C
• note	Operation with integral fan, replaceable	Operation with integral fan, replaceable	Operation with integral fan, replaceable	Operation with integral fan, replaceable
relative humidity				
• at 25 °C without condensation during operation maximum	95 %	95 %	95 %	95 %
protection class IP	IP20	IP20	IP20	IP20
design, dimensions and weights				
design	19" rack	19" rack	19" rack	19" rack
number of modular height units relating to 19-inch cabinet	3	3	2	2
width	449 mm	449 mm	449 mm	449 mm
height	130.8 mm	130.8 mm	87.2 mm	87.2 mm
depth	305 mm	305 mm	305 mm	305 mm
net weight	10 kg	10 kg	7.2 kg	7.2 kg
fastening method				
• 19-inch installation	Yes	Yes	Yes	Yes
• 35 mm top hat DIN rail mounting	No	No	No	No
• wall mounting	No	No	No	No
• S7-300 rail mounting	No	No	No	No
• S7-1500 rail mounting	No	No	No	No
type of cable outlet	Cable outlet at front	Cable outlet at front	Cable outlet at front	Cable outlet at front
product features, product functions, product components general				
cascading in cases of star topology	any (depending only on signal propagation time)	any (depending only on signal propagation time)	any (depending only on signal propagation time)	any (depending only on signal propagation time)
product functions management, configuration, engineering				
product function				
• CLI	Yes	Yes	Yes	Yes
• web-based management	Yes	Yes	Yes	Yes
• MIB support	Yes	Yes	Yes	Yes
• TRAPs via email	Yes	Yes	Yes	Yes
• configuration with STEP 7	Yes	Yes	Yes	Yes
• RMON	Yes	Yes	Yes	Yes
• port mirroring	Yes	Yes	Yes	Yes
• multiport mirroring	Yes	Yes	Yes	Yes
• CoS	Yes	Yes	Yes	Yes
• PROFINET IO diagnosis	Yes	Yes	Yes	Yes
• switch-managed	Yes	Yes	Yes	Yes
PROFINET conformity class	B	B	B	B
telegram length for Ethernet maximum	9 216 byte	9 216 byte	9 216 byte	9 216 byte

© Siemens AG 2024

Technical specifications (continued)

Article number	6GK5552-0AA00-2AR2	6GK5552-0AR00-2AR2	6GK5528-0AA00-2AR2	6GK5528-0AR00-2AR2
protocol is supported				
• Telnet	Yes	Yes	Yes	Yes
• HTTP	Yes	Yes	Yes	Yes
• HTTPS	Yes	Yes	Yes	Yes
• TFTP	Yes	Yes	Yes	Yes
• FTP	Yes	Yes	Yes	Yes
• BOOTP	Yes	Yes	Yes	Yes
• GMRP	Yes	Yes	Yes	Yes
• DCP	Yes	Yes	Yes	Yes
• LLDP	Yes	Yes	Yes	Yes
• SNMP v1	Yes	Yes	Yes	Yes
• SNMP v2	Yes	Yes	Yes	Yes
• SNMP v3	Yes	Yes	Yes	Yes
• IGMP (snooping/querier)	Yes	Yes	Yes	Yes
identification & maintenance function				
• I&M0 - device-specific information	Yes	Yes	Yes	Yes
• I&M1 - higher level designation/location designation	Yes	Yes	Yes	Yes
product functions diagnostics				
product function				
• port diagnostics	Yes	Yes	Yes	Yes
• statistics Packet Size	Yes	Yes	Yes	Yes
• statistics packet type	Yes	Yes	Yes	Yes
• error statistics	Yes	Yes	Yes	Yes
• SysLog	Yes	Yes	Yes	Yes
product functions VLAN				
product function				
• VLAN - port based	Yes	Yes	Yes	Yes
• VLAN - protocol-based	Yes	Yes	Yes	Yes
• VLAN - IP-based	Yes	Yes	Yes	Yes
• VLAN dynamic	Yes	Yes	Yes	Yes
number of VLANs maximum	255	255	255	255
number of VLANs - dynamic maximum	255	255	255	255
product functions DHCP				
product function				
• DHCP client	Yes	Yes	Yes	Yes
• DHCP Option 82	Yes	Yes	Yes	Yes
• DHCP Option 66	Yes	Yes	Yes	Yes
• DHCP Option 67	Yes	Yes	Yes	Yes
product functions routing				
service routing note	IP routing in combination with KEY-PLUG XR-500	IP routing integrated	IP routing in combination with KEY-PLUG XR-500	IP routing integrated
product function				
• static IP routing	Yes	Yes	Yes	Yes
• static IP routing IPv6	Yes	Yes	Yes	Yes
• dynamic IP routing	Yes	Yes	Yes	Yes
• dynamic IP routing IPv6	Yes	Yes	Yes	Yes
protocol is supported				
• RIPv2	Yes	Yes	Yes	Yes

© Siemens AG 2024

Technical specifications (continued)

Article number	6GK5552-0AA00-2AR2	6GK5552-0AR00-2AR2	6GK5528-0AA00-2AR2	6GK5528-0AR00-2AR2
• RIPnG for IPv6	Yes	Yes	Yes	Yes
• OSPFv2	Yes	Yes	Yes	Yes
• OSPFv3 for IPv6	Yes	Yes	Yes	Yes
• VRRP	Yes	Yes	Yes	Yes
• VRRP for IPv6	Yes	Yes	Yes	Yes
product functions redundancy				
protocol is supported Media Redundancy Protocol (MRP)	Yes	Yes	Yes	Yes
product function				
• media redundancy protocol (MRP) with redundancy manager	Yes	Yes	Yes	Yes
• Media Redundancy Protocol Interconnection (MRP-I)	Yes	Yes	Yes	Yes
• ring redundancy	Yes	Yes	Yes	Yes
• high speed redundancy protocol (HRP) with redundancy manager	Yes	Yes	Yes	Yes
• high speed redundancy protocol (HRP) with standby redundancy	Yes	Yes	Yes	Yes
• redundancy procedure STP	Yes	Yes	Yes	Yes
• redundancy procedure RSTP	Yes	Yes	Yes	Yes
• redundancy procedure RSTP+	Yes	Yes	Yes	Yes
• redundancy procedure MSTP	Yes	Yes	Yes	Yes
• Parallel Redundancy Protocol (PRP)/operation in the PRP-network	Yes		Yes	
• Parallel Redundancy Protocol (PRP)/Redundant Network Access (RNA)	No		No	
• passive listening	Yes	Yes	Yes	Yes
protocol is supported				
• LACP	Yes	Yes	Yes	Yes
product functions security				
product function				
• IEEE 802.1x (radius)	Yes	Yes	Yes	Yes
• broadcast/multicast/unicast limiter	Yes	Yes	Yes	Yes
• broadcast blocking	Yes	Yes	Yes	Yes
protocol is supported				
• SSH	Yes	Yes	Yes	Yes
product functions time				
product function				
• SICLOCK support	Yes	Yes	Yes	Yes
protocol is supported				
• NTP	Yes	Yes	Yes	Yes
• SNTP	Yes	Yes	Yes	Yes
type of time synchronization	IEEE 1588	IEEE 1588	IEEE 1588	IEEE 1588
standards, specifications, approvals				
certificate of suitability				
• CE marking	Yes	Yes	Yes	Yes
• KC approval	Yes	Yes	Yes	Yes
• Regulatory Compliance Mark (RCM)	Yes	Yes	Yes	Yes
standard				
• for safety from CSA and UL	UL 60950-1, CSA C22.2 No. 60950-1-03	UL 60950-1, CSA C22.2 No. 60950-1-03	UL 60950-1, CSA C22.2 No. 60950-1-03	UL 60950-1, CSA C22.2 No. 60950-1-03

© Siemens AG 2024

Technical specifications (continued)

Article number	6GK5552-0AA00-2AR2	6GK5552-0AR00-2AR2	6GK5528-0AA00-2AR2	6GK5528-0AR00-2AR2
standards, specifications, approvals hazardous environments				
certificate of suitability				
• ATEX	Yes	Yes	Yes	Yes
• UKEX	Yes	Yes	Yes	Yes
• IECEx	Yes	Yes	Yes	Yes
• ULhazloc approval	Yes	Yes	Yes	Yes
• CCC for hazardous zone according to GB standard	Yes	Yes	Yes	Yes
• FM registration	Yes	Yes	Yes	Yes
standards, specifications, approvals other				
certificate of suitability				
• RoHS conformity	Yes	Yes	Yes	Yes
IT security for industrial automation systems according to IEC 62443-4-2:2019	Yes	Yes	Yes	Yes
standards, specifications, approvals marine classification				
Marine classification association				
• American Bureau of Shipping Europe Ltd. (ABS)			Yes	Yes
• French marine classification society (BV)			Yes	Yes
• Det Norske Veritas (DNV)			No	
• DNV GL			Yes	Yes
• Lloyds Register of Shipping (LRS)			Yes	Yes
• Nippon Kaiji Kyokai (NK)			Yes	Yes
• Polski Rejestr Statkow (PRS)			Yes	Yes
• Royal Institution of Naval Architects (RINA)			Yes	Yes
standards, specifications, approvals Environmental Product Declaration				
Environmental Product Declaration	Yes	Yes	Yes	Yes
Global Warming Potential [CO2 eq]				
• total	593.61 kg	593.61 kg	467.85 kg	467.85 kg
• during manufacturing	225.96 kg	225.96 kg	225.96 kg	225.96 kg
• during operation	366.8 kg	366.8 kg	241.04 kg	241.04 kg
• after end of life	0.85 kg	0.85 kg	0.85 kg	0.85 kg
product functions general				
reference code				
• according to IEC 81346-2	KF	KF	KF	KF
• according to IEC 81346-2:2019	KFE	KFE	KFE	KFE
Warranty period	5 a	5 a	5 a	5 a
further information internet links				
internet link				
• to website: Selection guide for cables and connectors	https://support.industry.siemens.com/cs/ww/en/view/109766-358	https://support.industry.siemens.com/cs/ww/en/view/109766-358	https://support.industry.siemens.com/cs/ww/en/view/109766-358	https://support.industry.siemens.com/cs/ww/en/view/109766-358
• to web page: selection aid TIA Selection Tool	https://www.siemens.com/tstcloud	https://www.siemens.com/tstcloud	https://www.siemens.com/tstcloud	https://www.siemens.com/tstcloud
• to website: Industrial communication	https://www.siemens.com/simatic-net	https://www.siemens.com/simatic-net	https://www.siemens.com/simatic-net	https://www.siemens.com/simatic-net
• to web page: SiePortal	https://sieportal.siemens.com/	https://sieportal.siemens.com/	https://sieportal.siemens.com/	https://sieportal.siemens.com/

© Siemens AG 2024

Technical specifications (continued)

Article number	6GK5552-0AA00-2AR2	6GK5552-0AR00-2AR2	6GK5528-0AA00-2AR2	6GK5528-0AR00-2AR2
• to website: Image database	https://www.automation.siemens.com/bilddb	https://www.automation.siemens.com/bilddb	https://www.automation.siemens.com/bilddb	https://www.automation.siemens.com/bilddb
• to website: CAx-Download-Manager	https://www.siemens.com/cax	https://www.siemens.com/cax	https://www.siemens.com/cax	https://www.siemens.com/cax
• to website: Industry Online Support	https://support.industry.siemens.com	https://support.industry.siemens.com	https://support.industry.siemens.com	https://support.industry.siemens.com

Article number	6GK5524-8GS00-2AR2	6GK5524-8GS00-3AR2	6GK5524-8GS00-4AR2
product type designation			
product brand name	SCALANCE	SCALANCE	SCALANCE
product type designation	XR524-8C	XR524-8C	XR524-8C
transfer rate			
transfer rate	10 Mbit/s, 100 Mbit/s, 1 000 Mbit/s	10 Mbit/s, 100 Mbit/s, 1 000 Mbit/s	10 Mbit/s, 100 Mbit/s, 1 000 Mbit/s
interfaces for communication integrated			
number of electrical connections			
• for network components or terminal equipment	24; RJ45	24; RJ45	24; RJ45
number of 100 Mbit/s ST(BFOC) ports			
• for multimode	0	0	0
number of electrical connections			
• for SFP	8	8	8
number of combo ports with RJ45 interface for optical plug-in transceiver	8	8	8
interfaces for communication plug-in			
number of electrical connections			
• for SFP	8	8	8
interfaces other			
number of electrical connections			
• for operator console	1	1	1
• for signaling contact	1	1	1
• for power supply	1	1	1
type of electrical connection			
• for operator console	RJ11	RJ11	RJ11
• for management purposes	RJ45	RJ45	RJ45
• for signaling contact	2-pole terminal block	2-pole terminal block	2-pole terminal block
• for power supply	4-pole terminal block	4-pole terminal block	4-pole terminal block
product feature hot-swappable interface modules	Yes	Yes	Yes
operating voltage of the signaling contacts			
• at DC rated value	24 V	24 V	24 V
operational current of the signaling contacts			
• at DC maximum	0.1 A	0.1 A	0.1 A
supply voltage, current consumption, power loss			
product component connection for redundant voltage supply	Yes	Yes	Yes
type of voltage supply redundant power supply unit	No	No	Yes
type of voltage 1 of the supply voltage	DC	AC	AC
• supply voltage 1 rated value	24 V	230 V	230 V
• power loss [W] 1 rated value	24 W	24 W	24 W
• supply voltage 1 rated value	19.2 ... 28.8 V	90 ... 264 V	90 ... 264 V
• consumed current 1 maximum	1 A	0.6 A	0.6 A
• type of electrical connection 1 for power supply	4-pole terminal block	4-pole terminal block	4-pole terminal block
• product component 1 fusing at power supply input	Yes	Yes	Yes
• fuse protection type 1 at input for supply voltage	3.15 A / 125 V	3.15 A / 250 V	3.15 A / 250 V

© Siemens AG 2024

Technical specifications (continued)

Article number	6GK5524-8GS00-2AR2	6GK5524-8GS00-3AR2	6GK5524-8GS00-4AR2
ambient conditions			
ambient temperature			
• during operation	-40 ... +70 °C	-25 ... +60 °C	-25 ... +60 °C
• during storage	-40 ... +85 °C	-40 ... +85 °C	-40 ... +85 °C
• during transport	-40 ... +85 °C	-40 ... +85 °C	-40 ... +85 °C
relative humidity			
• at 25 °C without condensation during operation maximum	95 %	95 %	95 %
protection class IP	IP20	IP20	IP20
design, dimensions and weights			
design	19" rack	19" rack	19" rack
number of modular height units relating to 19-inch cabinet	1	1	1
width	449 mm	449 mm	449 mm
height	44 mm	44 mm	44 mm
depth	305 mm	305 mm	305 mm
net weight	3.8 kg	4.2 kg	4.5 kg
fastening method			
• 19-inch installation	Yes	Yes	Yes
• 35 mm top hat DIN rail mounting	No	No	No
• wall mounting	No	No	No
• S7-300 rail mounting	No	No	No
• S7-1500 rail mounting	No	No	No
type of cable outlet	Cable outlet at front	Cable outlet at front	Cable outlet at front
product features, product functions, product components general			
cascading in cases of star topology	any (depending only on signal propagation time)	any (depending only on signal propagation time)	any (depending only on signal propagation time)
product functions management, configuration, engineering			
product function			
• CLI	Yes	Yes	Yes
• web-based management	Yes	Yes	Yes
• MIB support	Yes	Yes	Yes
• TRAPs via email	Yes	Yes	Yes
• configuration with STEP 7	Yes	Yes	Yes
• RMON	Yes	Yes	Yes
• port mirroring	Yes	Yes	Yes
• multiport mirroring	Yes	Yes	Yes
• CoS	Yes	Yes	Yes
• PROFINET IO diagnosis	Yes	Yes	Yes
• switch-managed	Yes	Yes	Yes
PROFINET conformity class	B	B	B
telegram length for Ethernet maximum	9 216 byte	9 216 byte	9 216 byte
protocol is supported			
• Telnet	Yes	Yes	Yes
• HTTP	Yes	Yes	Yes
• HTTPS	Yes	Yes	Yes
• TFTP	Yes	Yes	Yes
• FTP	Yes	Yes	Yes

© Siemens AG 2024

Technical specifications (continued)

Article number	6GK5524-8GS00-2AR2	6GK5524-8GS00-3AR2	6GK5524-8GS00-4AR2
• BOOTP	Yes	Yes	Yes
• GMRP	Yes	Yes	Yes
• DCP	Yes	Yes	Yes
• LLDP	Yes	Yes	Yes
• SNMP v1	Yes	Yes	Yes
• SNMP v2	Yes	Yes	Yes
• SNMP v3	Yes	Yes	Yes
• IGMP (snooping/querier)	Yes	Yes	Yes
identification & maintenance function			
• I&M0 - device-specific information	Yes	Yes	Yes
• I&M1 - higher level designation/location designation	Yes	Yes	Yes
product functions diagnostics			
product function			
• port diagnostics	Yes	Yes	Yes
• statistics Packet Size	Yes	Yes	Yes
• statistics packet type	Yes	Yes	Yes
• error statistics	Yes	Yes	Yes
• SysLog	Yes	Yes	Yes
product functions VLAN			
product function			
• VLAN - port based	Yes	Yes	Yes
• VLAN - protocol-based	Yes	Yes	Yes
• VLAN - IP-based	Yes	Yes	Yes
• VLAN dynamic	Yes	Yes	Yes
number of VLANs maximum	255	255	255
number of VLANs - dynamic maximum	255	255	255
product functions DHCP			
product function			
• DHCP client	Yes	Yes	Yes
• DHCP Option 82	Yes	Yes	Yes
• DHCP Option 66	Yes	Yes	Yes
• DHCP Option 67	Yes	Yes	Yes
product functions routing			
service routing note	IP routing in combination with KEY-PLUG XR-500	IP routing in combination with KEY-PLUG XR-500	IP routing in combination with KEY-PLUG XR-500
product function			
• static IP routing	Yes	Yes	Yes
• static IP routing IPv6	Yes	Yes	Yes
• dynamic IP routing	Yes	Yes	Yes
• dynamic IP routing IPv6	Yes	Yes	Yes
protocol is supported			
• RIPv2	Yes	Yes	Yes
• RIPnG for IPv6	Yes	Yes	Yes
• OSPFv2	Yes	Yes	Yes
• OSPFv3 for IPv6	Yes	Yes	Yes
• VRRP	Yes	Yes	Yes
• VRRP for IPv6	Yes	Yes	Yes

© Siemens AG 2024

Technical specifications (continued)

Article number	6GK5524-8GS00-2AR2	6GK5524-8GS00-3AR2	6GK5524-8GS00-4AR2
product functions redundancy			
protocol is supported Media Redundancy Protocol (MRP)	Yes	Yes	Yes
product function			
• media redundancy protocol (MRP) with redundancy manager	Yes	Yes	Yes
• Media Redundancy Protocol Interconnection (MRP-I)	Yes	Yes	Yes
• ring redundancy	Yes	Yes	Yes
• high speed redundancy protocol (HRP) with redundancy manager	Yes	Yes	Yes
• high speed redundancy protocol (HRP) with standby redundancy	Yes	Yes	Yes
• redundancy procedure STP	Yes	Yes	Yes
• redundancy procedure RSTP	Yes	Yes	Yes
• redundancy procedure RSTP+	Yes	Yes	Yes
• redundancy procedure MSTP	Yes	Yes	Yes
• passive listening	Yes	Yes	Yes
protocol is supported			
• LACP	Yes	Yes	Yes
product functions security			
product function			
• IEEE 802.1x (radius)	Yes	Yes	Yes
• broadcast/multicast/unicast limiter	Yes	Yes	Yes
• broadcast blocking	Yes	Yes	Yes
protocol is supported			
• SSH	Yes	Yes	Yes
product functions time			
product function			
• SICLOCK support	Yes	Yes	Yes
protocol is supported			
• NTP	Yes	Yes	Yes
• SNTP	Yes	Yes	Yes
standards, specifications, approvals			
certificate of suitability			
• CE marking	Yes	Yes	Yes
• KC approval	Yes	Yes	Yes
• Regulatory Compliance Mark (RCM)	Yes	Yes	Yes
standard			
• for safety from CSA and UL	UL 60950-1; CSA C22.2 No. 213-M1987	UL 60950-1; CSA C22.2 No. 213-M1987	UL 60950-1; CSA C22.2 No. 213-M1987
standards, specifications, approvals hazardous environments			
certificate of suitability			
• ATEX	Yes		
• UKEX	Yes		
• IECEx	Yes		
• ULhazloc approval	Yes		
• CCC for hazardous zone according to GB standard	Yes		
• FM registration	Yes		
standards, specifications, approvals other			
certificate of suitability			
• RoHS conformity	Yes	Yes	Yes

© Siemens AG 2024

Technical specifications (continued)

Article number	6GK5524-8GS00-2AR2	6GK5524-8GS00-3AR2	6GK5524-8GS00-4AR2
IT security for industrial automation systems according to IEC 62443-4-2:2019	Yes	Yes	Yes
standards, specifications, approvals marine classification			
Marine classification association			
• American Bureau of Shipping Europe Ltd. (ABS)	Yes	Yes	Yes
• French marine classification society (BV)	Yes	Yes	Yes
• Det Norske Veritas (DNV)	No		
• DNV GL	Yes	Yes	Yes
• Korean Register of Shipping (KRS)	Yes	Yes	Yes
• Lloyds Register of Shipping (LRS)	Yes	Yes	Yes
• Nippon Kaiji Kyokai (NK)	Yes	Yes	Yes
• Polski Rejestr Statkow (PRS)	Yes	Yes	Yes
• Royal Institution of Naval Architects (RINA)	Yes	Yes	Yes
standards, specifications, approvals Environmental Product Declaration			
Environmental Product Declaration	Yes	Yes	Yes
Global Warming Potential [CO2 eq]			
• total	488.81 kg	488.81 kg	488.81 kg
• during manufacturing	225.96 kg	225.96 kg	225.96 kg
• during operation	262 kg	262 kg	262 kg
• after end of life	0.85 kg	0.85 kg	0.85 kg
product functions general			
reference code			
• according to IEC 81346-2	KF	KF	KF
• according to IEC 81346-2:2019	KFE	KFE	KFE
Warranty period	5 a	5 a	5 a
further information internet links			
internet link			
• to website: Selection guide for cables and connectors	https://support.industry.siemens.com/cs/ww/en/view/109766358	https://support.industry.siemens.com/cs/ww/en/view/109766358	https://support.industry.siemens.com/cs/ww/en/view/109766358
• to web page: selection aid TIA Selection Tool	https://www.siemens.com/tstcloud	https://www.siemens.com/tstcloud	https://www.siemens.com/tstcloud
• to website: Industrial communication	https://www.siemens.com/simatic-net	https://www.siemens.com/simatic-net	https://www.siemens.com/simatic-net
• to web page: SiePortal	https://sieportal.siemens.com/	https://sieportal.siemens.com/	https://sieportal.siemens.com/
• to website: Image database	https://www.automation.siemens.com/bilddb	https://www.automation.siemens.com/bilddb	https://www.automation.siemens.com/bilddb
• to website: CAx-Download-Manager	https://www.siemens.com/cax	https://www.siemens.com/cax	https://www.siemens.com/cax
• to website: Industry Online Support	https://support.industry.siemens.com	https://support.industry.siemens.com	https://support.industry.siemens.com

Article number	6GK5534-2TR00-2AR3	6GK5534-2TR00-3AR3	6GK5534-2TR00-4AR3
product type designation			
product brand name	SCALANCE	SCALANCE	SCALANCE
transfer rate			
transfer rate	10 Mbit/s, 100 Mbit/s, 1 000 Mbit/s, 2.5 Gbit/s, 5 Gbit/s, 10 Gbit/s	10 Mbit/s, 100 Mbit/s, 1 000 Mbit/s, 2.5 Gbit/s, 5 Gbit/s, 10 Gbit/s	10 Mbit/s, 100 Mbit/s, 1 000 Mbit/s, 2.5 Gbit/s, 5 Gbit/s, 10 Gbit/s
interfaces for communication integrated			
number of electrical connections			
• for network components or terminal equipment	26; RJ45 with securing collar	26; RJ45 with securing collar	26; RJ45 with securing collar

© Siemens AG 2024

Technical specifications (continued)

Article number	6GK5534-2TR00-2AR3	6GK5534-2TR00-3AR3	6GK5534-2TR00-4AR3
number of 10/100/1000 Mbit/s RJ45 ports			
• with securing collar	24	24	24
number of 1000/2500/5000/10000 Mbps RJ45 ports with securing collar	2	2	2
number of electrical connections			
• for SFP+	8; 1000 Mbps and 10000 Mbps SFP usable	8; 1000 Mbps and 10000 Mbps SFP usable	8; 1000 Mbps and 10000 Mbps SFP usable
interfaces other			
number of electrical connections			
• for operator console	1	1	1
• for signaling contact	1	1	1
• for power supply	2	1	2
type of electrical connection			
• for operator console	USB (2.0 Port, Type B, serial via USB)	USB (2.0 Port, Type B, serial via USB)	USB (2.0 Port, Type B, serial via USB)
• for signaling contact	2-pole terminal block	2-pole terminal block	2-pole terminal block
• for power supply	2 x 2-pin terminal block	IEC plug C14 AC supply or 2-pole terminal block for DC supply	IEC plug C14 AC supply or 2-pole terminal block for DC supply
design of the removable storage			
• CLP	Yes	Yes	Yes
operating voltage of the signaling contacts			
• at DC rated value	24 V	24 V	24 V
operational current of the signaling contacts			
• at DC maximum	0.1 A	0.1 A	0.1 A
supply voltage, current consumption, power loss			
product component connection for redundant voltage supply	Yes	No	Yes
type of voltage supply redundant power supply unit	No	No	Yes
type of voltage 1 of the supply voltage	DC	DC	DC
• supply voltage 1 rated value	24 V	100V ... 250V DC	100V ... 250V DC
• power loss [W] 1 rated value	72 W	99 W	99 W
• supply voltage 1 rated value	19.2 ... 31.2 V	77 ... 300 V	77 ... 300 V
• consumed current 1 maximum	3 A	0.8 A	0.8 A
• type of electrical connection 1 for power supply	2 x 2-pole terminal block	2-pole terminal block	2-pole terminal block
• product component 1 fusing at power supply input	Yes	Yes	Yes
• fuse protection type 1 at input for supply voltage	F 10 A / 250 V	F 4A / 250 V	F 4A / 250 V
type of voltage 2 of the supply voltage	AC (50 / 60Hz)	AC (50 / 60Hz)	AC (50 / 60Hz)
• supply voltage 2 rated value	24 V	240 V; 100V ... 240V AC	240 V; 100V ... 240V AC
• power loss [W] 2 rated value	72 W	99 W	99 W
• supply voltage 2 rated value	19.2 ... 30 V	85 ... 264 V	85 ... 264 V
• consumed current 2 maximum	3 A	0.8 A	0.8 A
• type of electrical connection 2 for power supply	2 x 2-pole terminal block	C14, IEC plug	C14, IEC plug
• fuse protection type 2 at input for supply voltage	F 10 A / 250 V	F 4A / 250 V	F 4A / 250 V
ambient conditions			
ambient temperature in horizontal mounting position during operation	-40 ... +70 °C; Starting at -40 °C; The maximum ambient temperature during operation depends on the operating height and the plug-in transceivers, see also manual.	-25 ... +60 °C; Starting at -25 °C; The maximum ambient temperature during operation depends on the operating height and the plug-in transceivers, see also manual.	-25 ... +60 °C; Starting at -25 °C; The maximum ambient temperature during operation depends on the operating height and the plug-in transceivers, see also manual.
installation altitude at height above sea level maximum	4 000 m	3 000 m	3 000 m
relative humidity			
• at 25 °C without condensation during operation maximum	95 %	95 %	95 %
operating condition fanless operation	Yes	Yes	Yes

© Siemens AG 2024

Technical specifications (continued)

Article number	6GK5534-2TR00-2AR3	6GK5534-2TR00-3AR3	6GK5534-2TR00-4AR3
protection class IP	IP20	IP20	IP20
design, dimensions and weights			
design	19" rack	19" rack	19" rack
number of modular height units relating to 19-inch cabinet	1	1	1
width	446 mm	446 mm	446 mm
height	43.6 mm	43.6 mm	43.6 mm
depth	374.8 mm	374.8 mm	374.8 mm
net weight	8 kg	8.2 kg	8.4 kg
material of the enclosure	metal	metal	metal
fastening method			
• 19-inch installation	Yes	Yes	Yes
product features, product functions, product components general			
cascading in the case of a redundant ring at reconfiguration time of <\~0.3\~s	50	50	50
cascading in cases of star topology	any (depending only on signal propagation time)	any (depending only on signal propagation time)	any (depending only on signal propagation time)
number of automatically learnable MAC addresses	16 382	16 382	16 382
number of QoS queues per port	8	8	8
product function			
• QoS according to IEEE 802.1Q	Yes	Yes	Yes
product feature			
• Store & Forward switching method	Yes	Yes	Yes
product functions management, configuration, engineering			
product function			
• CLI	Yes	Yes	Yes
• web-based management	Yes	Yes	Yes
• MIB support	Yes	Yes	Yes
• TRAPs via email	Yes	Yes	Yes
• configuration with STEP 7	Yes	Yes	Yes
• RMON	Yes	Yes	Yes
• port mirroring	Yes	Yes	Yes
• multiport mirroring	Yes	Yes	Yes
• CoS	Yes	Yes	Yes
• PROFINET IO diagnosis	Yes	Yes	Yes
• switch-managed	Yes	Yes	Yes
PROFINET conformity class	B	B	B
network load class according to PROFINET	3	3	3
telegram length for Ethernet maximum	9 194 byte	9 194 byte	9 194 byte
protocol is supported			
• Telnet	Yes	Yes	Yes
• HTTP	Yes	Yes	Yes
• HTTPS	Yes	Yes	Yes
• TFTP	Yes	Yes	Yes
• FTP	Yes	Yes	Yes
• SFTP	Yes	Yes	Yes
• BOOTP	Yes	Yes	Yes
• NETCONF	No	No	No
• GMRP	Yes	Yes	Yes
• DCP	Yes	Yes	Yes

© Siemens AG 2024

Technical specifications (continued)

Article number	6GK5534-2TR00-2AR3	6GK5534-2TR00-3AR3	6GK5534-2TR00-4AR3
• LLDP	Yes	Yes	Yes
• EtherNet/IP	Yes	Yes	Yes
• SNMP v1	Yes	Yes	Yes
• SNMP v2	Yes	Yes	Yes
• SNMP v3	Yes	Yes	Yes
• IGMP (snooping/querier)	Yes	Yes	Yes
identification & maintenance function			
• I&M0 - device-specific information	Yes	Yes	Yes
• I&M1 - higher level designation/location designation	Yes	Yes	Yes
product functions diagnostics			
product function			
• port diagnostics	Yes	Yes	Yes
• statistics Packet Size	Yes	Yes	Yes
• statistics packet type	Yes	Yes	Yes
• error statistics	Yes	Yes	Yes
• SysLog	Yes	Yes	Yes
product functions VLAN			
product function			
• VLAN - port based	Yes	Yes	Yes
• VLAN - protocol-based	No	No	No
• VLAN - IP-based	No	No	No
• VLAN dynamic	Yes	Yes	Yes
number of VLANs maximum	257	257	257
number of VLANs - dynamic maximum	257	257	257
number of VLANs at ring redundancy (HRP; MRP; standby link)	257	257	257
product functions DHCP			
product function			
• DHCP server	Yes	Yes	Yes
• DHCP client	Yes	Yes	Yes
• DHCP Option 82	Yes	Yes	Yes
• DHCP Option 66	Yes	Yes	Yes
• DHCP Option 67	Yes	Yes	Yes
product functions routing			
service routing note	IP routing integrated	IP routing integrated	IP routing integrated
product function			
• static IP routing	Yes	Yes	Yes
• static IP routing IPv6	No	No	No
• dynamic IP routing	Yes	Yes	Yes
• dynamic IP routing IPv6	No	No	No
protocol is supported			
• RIPv2	Yes	Yes	Yes
• RIPnG for IPv6	No	No	No
• OSPFv2	Yes	Yes	Yes
• OSPFv3 for IPv6	No	No	No
• VRRP	Yes	Yes	Yes
• VRRP for IPv6	No	No	No

© Siemens AG 2024

Technical specifications (continued)

Article number	6GK5534-2TR00-2AR3	6GK5534-2TR00-3AR3	6GK5534-2TR00-4AR3
product functions redundancy			
protocol is supported Media Redundancy Protocol (MRP)	Yes	Yes	Yes
product function			
• media redundancy protocol (MRP) with redundancy manager	Yes	Yes	Yes
• Media Redundancy Protocol Interconnection (MRP-I)	Yes	Yes	Yes
• of the PROFINET IO device is supported PROFINET system redundancy	Yes	Yes	Yes
• ring redundancy	Yes	Yes	Yes
• high speed redundancy protocol (HRP) with redundancy manager	Yes	Yes	Yes
• high speed redundancy protocol (HRP) with standby redundancy	Yes	Yes	Yes
• redundancy procedure STP	Yes	Yes	Yes
• redundancy procedure RSTP	Yes	Yes	Yes
• redundancy procedure RSTP+	Yes	Yes	Yes
• redundancy procedure MSTP	Yes	Yes	Yes
• High-availability Seamless Redundancy (HSR)	Yes	Yes	Yes
• Parallel Redundancy Protocol (PRP)/operation in the PRP-network	Yes	Yes	Yes
• Parallel Redundancy Protocol (PRP)/Redundant Network Access (RNA)	Yes	Yes	Yes
• passive listening	Yes	Yes	Yes
protocol is supported			
• LACP	Yes	Yes	Yes
system modification during operation			
product function configuration in RUN via CiR/H-CiR	Yes	Yes	Yes
product functions security			
product function			
• IEEE 802.1x (radius)	Yes	Yes	Yes
• broadcast/multicast/unicast limiter	Yes	Yes	Yes
• broadcast blocking	Yes	Yes	Yes
protocol is supported			
• SSH	Yes	Yes	Yes
• SSL	Yes	Yes	Yes
product functions time			
product function			
• SICLOCK support	Yes	Yes	Yes
• NTP-client	Yes	Yes	Yes
• SNTP client	Yes	Yes	Yes
• IEEE 1588 v2 transparent forwarding	Yes	Yes	Yes
protocol is supported			
• NTP	Yes	Yes	Yes
• SNTP	Yes	Yes	Yes
accuracy at IEEE 1588 v2			
• not less than	100 µs	100 µs	100 µs
• typical	50 ns	50 ns	50 ns
standards, specifications, approvals			
certificate of suitability			
• CE marking	Yes	Yes	Yes

© Siemens AG 2024

Technical specifications (continued)

Article number	6GK5534-2TR00-2AR3	6GK5534-2TR00-3AR3	6GK5534-2TR00-4AR3
• KC approval	Yes	Yes	Yes
• Regulatory Compliance Mark (RCM)	Yes	Yes	Yes
product conformity according to EMC-guideline	2014/30/EU	2014/30/EU	2014/30/EU
standard			
• for EMC interference emission	EN 61000-6-4, EN 50121-9	EN 61000-6-4, EN 50121-9	EN 61000-6-4, EN 50121-9
• for immunity to EMC	EN 61000-6-2, EN 50121-4	EN 61000-6-2, EN 50121-4	EN 61000-6-2, EN 50121-4
• for safety from CSA and UL	in preparation	in preparation	in preparation
standards, specifications, approvals other			
certificate of suitability			
• railway application in accordance with EN 50121-4		Yes	Yes
• railway application in accordance with EN 50125-3		Yes	Yes
IT security for industrial automation systems according to IEC 62443-4-2:2019	Yes	Yes	Yes
standards, specifications, approvals Environmental Product Declaration			
Environmental Product Declaration	Yes	Yes	Yes
Global Warming Potential [CO2 eq]			
• total	991.85 kg	1 274.81 kg	1 274.81 kg
• during manufacturing	225.96 kg	225.96 kg	225.96 kg
• during operation	765.04 kg	1 048 kg	1 048 kg
• after end of life	0.85 kg	0.85 kg	0.85 kg
product functions general			
MTBF	12.6 a	8.3 a	10.2 a
reference temperature for MTBF determination	40 °C	40 °C	40 °C
reference code			
• according to IEC 81346-2	KF	KF	KF
• according to IEC 81346-2:2019	KFE	KFE	KFE
Warranty period	5 a	5 a	5 a
further information internet links			
internet link			
• to website: Selection guide for cables and connectors	https://support.industry.siemens.com/cs/ww/en/view/109766358	https://support.industry.siemens.com/cs/ww/en/view/109766358	https://support.industry.siemens.com/cs/ww/en/view/109766358
• to web page: selection aid TIA Selection Tool	https://www.siemens.com/tstcloud	https://www.siemens.com/tstcloud	https://www.siemens.com/tstcloud
• to website: Industrial communication	https://www.siemens.com/simatic-net	https://www.siemens.com/simatic-net	https://www.siemens.com/simatic-net
• to web page: SiePortal	https://sieportal.siemens.com/	https://sieportal.siemens.com/	https://sieportal.siemens.com/
• to website: Image database	https://www.automation.siemens.com/bilddb	https://www.automation.siemens.com/bilddb	https://www.automation.siemens.com/bilddb
• to website: CAx-Download-Manager	https://www.siemens.com/cax	https://www.siemens.com/cax	https://www.siemens.com/cax
• to website: Industry Online Support	https://support.industry.siemens.com	https://support.industry.siemens.com	https://support.industry.siemens.com

Article number	6GK5534-3TR00-2AR3	6GK5534-3TR00-3AR3	6GK5534-3TR00-4AR3
product type designation			
product brand name	SCALANCE	SCALANCE	SCALANCE
transfer rate			
transfer rate	10 Mbit/s, 100 Mbit/s, 1 000 Mbit/s, 2.5 Gbit/s, 5 Gbit/s, 10 Gbit/s	10 Mbit/s, 100 Mbit/s, 1 000 Mbit/s, 2.5 Gbit/s, 5 Gbit/s, 10 Gbit/s	10 Mbit/s, 100 Mbit/s, 1 000 Mbit/s, 2.5 Gbit/s, 5 Gbit/s, 10 Gbit/s
interfaces for communication integrated			
number of electrical connections			
• for network components or terminal equipment	22; RJ45 with securing collar	22; RJ45 with securing collar	22; RJ45 with securing collar

© Siemens AG 2024

Technical specifications (continued)

Article number	6GK5534-3TR00-2AR3	6GK5534-3TR00-3AR3	6GK5534-3TR00-4AR3
number of 10/100/1000 Mbit/s RJ45 ports			
• with securing collar	20	20	20
number of 1000/2500/5000/10000 Mbps RJ45 ports with securing collar	2	2	2
number of electrical connections			
• for SFP	4; 100 Mbps and 1000 Mbps SFP usable	4; 100 Mbps and 1000 Mbps SFP usable	4; 100 Mbps and 1000 Mbps SFP usable
• for SFP+	8; 1000 Mbps and 10000 Mbps SFP usable	8; 1000 Mbps and 10000 Mbps SFP usable	8; 1000 Mbps and 10000 Mbps SFP usable
interfaces other			
number of electrical connections			
• for operator console	1	1	1
• for signaling contact	1	1	1
• for power supply	2	1	2
type of electrical connection			
• for operator console	USB (2.0 Port, Type B, serial via USB)	USB (2.0 Port, Type B, serial via USB)	USB (2.0 Port, Type B, serial via USB)
• for signaling contact	2-pole terminal block	2-pole terminal block	2-pole terminal block
• for power supply	2 x 2-pin terminal block	IEC plug C14 AC supply or 2-pole terminal block for DC supply	IEC plug C14 AC supply or 2-pole terminal block for DC supply
design of the removable storage			
• CLP	Yes	Yes	Yes
operating voltage of the signaling contacts			
• at DC rated value	24 V	24 V	24 V
operational current of the signaling contacts			
• at DC maximum	0.1 A	0.1 A	0.1 A
supply voltage, current consumption, power loss			
product component connection for redundant voltage supply	Yes	No	Yes
type of voltage supply redundant power supply unit	No	No	Yes
type of voltage 1 of the supply voltage	DC	DC	DC
• supply voltage 1 rated value	24 V	100V ... 250V DC	100V ... 250V DC
• power loss [W] 1 rated value	72 W	99 W	99 W
• supply voltage 1 rated value	19.2 ... 31.2 V	77 ... 300 V	77 ... 300 V
• consumed current 1 maximum	3 A	0.8 A	0.8 A
• type of electrical connection 1 for power supply	2 x 2-pole terminal block	2-pole terminal block	2-pole terminal block
• product component 1 fusing at power supply input	Yes	Yes	Yes
• fuse protection type 1 at input for supply voltage	F 10 A / 250 V	F 4A / 250 V	F 4A / 250 V
type of voltage 2 of the supply voltage	AC (50 / 60Hz)	AC (50 / 60Hz)	AC (50 / 60Hz)
• supply voltage 2 rated value	24 V	240 V; 100V ... 240V AC	240 V; 100V ... 240V AC
• power loss [W] 2 rated value	72 W	99 W	99 W
• supply voltage 2 rated value	19.2 ... 30 V	85 ... 264 V	85 ... 264 V
• consumed current 2 maximum	3 A	0.8 A	0.8 A
• type of electrical connection 2 for power supply	2 x 2-pole terminal block	C14, IEC plug	C14, IEC plug
• fuse protection type 2 at input for supply voltage	F 10 A / 250 V	F 4A / 250 V	F 4A / 250 V
ambient conditions			
ambient temperature in horizontal mounting position during operation	-40 ... +70 °C; Starting at -40 °C; The maximum ambient temperature during operation depends on the operating height and the plug-in transceivers, see also manual.	-25 ... +60 °C; Starting at -25 °C; The maximum ambient temperature during operation depends on the operating height and the plug-in transceivers, see also manual.	-25 ... +60 °C; Starting at -25 °C; The maximum ambient temperature during operation depends on the operating height and the plug-in transceivers, see also manual.
installation altitude at height above sea level maximum	4 000 m	3 000 m	3 000 m

© Siemens AG 2024

Technical specifications (continued)

Article number	6GK5534-3TR00-2AR3	6GK5534-3TR00-3AR3	6GK5534-3TR00-4AR3
relative humidity			
• at 25 °C without condensation during operation maximum	95 %	95 %	95 %
operating condition fanless operation	Yes	Yes	Yes
protection class IP	IP20	IP20	IP20
design, dimensions and weights			
design	19" rack	19" rack	19" rack
number of modular height units relating to 19-inch cabinet	1	1	1
width	446 mm	446 mm	446 mm
height	43.6 mm	43.6 mm	43.6 mm
depth	374.8 mm	374.8 mm	374.8 mm
net weight	8 kg	8.2 kg	8.4 kg
material of the enclosure	metal	metal	metal
fastening method			
• 19-inch installation	Yes	Yes	Yes
product features, product functions, product components general			
cascading in the case of a redundant ring at reconfiguration time of <\~0.3\~s	50	50	50
cascading in cases of star topology	any (depending only on signal propagation time)	any (depending only on signal propagation time)	any (depending only on signal propagation time)
number of automatically learnable MAC addresses	16 382	16 382	16 382
number of QoS queues per port	8	8	8
product function			
• QoS according to IEEE 802.1Q	Yes	Yes	Yes
product feature			
• Store & Forward switching method	Yes	Yes	Yes
product functions management, configuration, engineering			
product function			
• CLI	Yes	Yes	Yes
• web-based management	Yes	Yes	Yes
• MIB support	Yes	Yes	Yes
• TRAPs via email	Yes	Yes	Yes
• configuration with STEP 7	Yes	Yes	Yes
• RMON	Yes	Yes	Yes
• port mirroring	Yes	Yes	Yes
• multiport mirroring	Yes	Yes	Yes
• CoS	Yes	Yes	Yes
• PROFINET IO diagnosis	Yes	Yes	Yes
• switch-managed	Yes	Yes	Yes
PROFINET conformity class	B	B	B
network load class according to PROFINET	3	3	3
telegram length for Ethernet maximum	9 194 byte	9 194 byte	9 194 byte
protocol is supported			
• Telnet	Yes	Yes	Yes
• HTTP	Yes	Yes	Yes
• HTTPS	Yes	Yes	Yes
• TFTP	Yes	Yes	Yes
• FTP	Yes	Yes	Yes
• SFTP	Yes	Yes	Yes
• BOOTP	Yes	Yes	Yes

© Siemens AG 2024

Technical specifications (continued)

Article number	6GK5534-3TR00-2AR3	6GK5534-3TR00-3AR3	6GK5534-3TR00-4AR3
• NETCONF	No	No	No
• GMRP	Yes	Yes	Yes
• DCP	Yes	Yes	Yes
• LLDP	Yes	Yes	Yes
• EtherNet/IP	Yes	Yes	Yes
• SNMP v1	Yes	Yes	Yes
• SNMP v2	Yes	Yes	Yes
• SNMP v3	Yes	Yes	Yes
• IGMP (snooping/querier)	Yes	Yes	Yes
identification & maintenance function			
• I&M0 - device-specific information	Yes	Yes	Yes
• I&M1 - higher level designation/location designation	Yes	Yes	Yes
product functions diagnostics			
product function			
• port diagnostics	Yes	Yes	Yes
• statistics Packet Size	Yes	Yes	Yes
• statistics packet type	Yes	Yes	Yes
• error statistics	Yes	Yes	Yes
• SysLog	Yes	Yes	Yes
product functions VLAN			
product function			
• VLAN - port based	Yes	Yes	Yes
• VLAN - protocol-based	No	No	No
• VLAN - IP-based	No	No	No
• VLAN dynamic	Yes	Yes	Yes
number of VLANs maximum	257	257	257
number of VLANs - dynamic maximum	257	257	257
number of VLANs at ring redundancy (HRP; MRP; standby link)	257	257	257
product functions DHCP			
product function			
• DHCP server	Yes	Yes	Yes
• DHCP client	Yes	Yes	Yes
• DHCP Option 82	Yes	Yes	Yes
• DHCP Option 66	Yes	Yes	Yes
• DHCP Option 67	Yes	Yes	Yes
product functions routing			
service routing note	IP routing integrated	IP routing integrated	IP routing integrated
product function			
• static IP routing	Yes	Yes	Yes
• static IP routing IPv6	No	No	No
• dynamic IP routing	Yes	Yes	Yes
• dynamic IP routing IPv6	No	No	No
protocol is supported			
• RIPv2	Yes	Yes	Yes
• RIPnG for IPv6	No	No	No
• OSPFv2	Yes	Yes	Yes
• OSPFv3 for IPv6	No	No	No

© Siemens AG 2024

Technical specifications (continued)

Article number	6GK5534-3TR00-2AR3	6GK5534-3TR00-3AR3	6GK5534-3TR00-4AR3
• VRRP	Yes	Yes	Yes
• VRRP for IPv6	No	No	No
product functions redundancy			
protocol is supported Media Redundancy Protocol (MRP)	Yes	Yes	Yes
product function			
• media redundancy protocol (MRP) with redundancy manager	Yes	Yes	Yes
• Media Redundancy Protocol Interconnection (MRP-I)	Yes	Yes	Yes
• of the PROFINET IO device is supported PROFINET system redundancy	Yes	Yes	Yes
• ring redundancy	Yes	Yes	Yes
• high speed redundancy protocol (HRP) with redundancy manager	Yes	Yes	Yes
• high speed redundancy protocol (HRP) with standby redundancy	Yes	Yes	Yes
• redundancy procedure STP	Yes	Yes	Yes
• redundancy procedure RSTP	Yes	Yes	Yes
• redundancy procedure RSTP+	Yes	Yes	Yes
• redundancy procedure MSTP	Yes	Yes	Yes
• High-availability Seamless Redundancy (HSR)	Yes	Yes	Yes
• Parallel Redundancy Protocol (PRP)/operation in the PRP-network	Yes	Yes	Yes
• Parallel Redundancy Protocol (PRP)/Redundant Network Access (RNA)	Yes	Yes	Yes
• passive listening	Yes	Yes	Yes
protocol is supported			
• LACP	Yes	Yes	Yes
system modification during operation			
product function configuration in RUN via CiR/H-CiR	Yes	Yes	Yes
product functions security			
product function			
• IEEE 802.1x (radius)	Yes	Yes	Yes
• broadcast/multicast/unicast limiter	Yes	Yes	Yes
• broadcast blocking	Yes	Yes	Yes
protocol is supported			
• SSH	Yes	Yes	Yes
• SSL	Yes	Yes	Yes
product functions time			
product function			
• SICLOCK support	Yes	Yes	Yes
• NTP-client	Yes	Yes	Yes
• SNTP client	Yes	Yes	Yes
• IEEE 1588 v2 transparent forwarding	Yes	Yes	Yes
protocol is supported			
• NTP	Yes	Yes	Yes
• SNTP	Yes	Yes	Yes
accuracy at IEEE 1588 v2			
• not less than	100 µs	100 µs	100 µs
• typical	50 ns	50 ns	50 ns

© Siemens AG 2024

Technical specifications (continued)

Article number	6GK5534-3TR00-2AR3	6GK5534-3TR00-3AR3	6GK5534-3TR00-4AR3
standards, specifications, approvals			
certificate of suitability			
• CE marking	Yes	Yes	Yes
• KC approval	Yes	Yes	Yes
• Regulatory Compliance Mark (RCM)	Yes	Yes	Yes
product conformity according to EMC-guideline	2014/30/EU	2014/30/EU	2014/30/EU
standard			
• for EMC interference emission	EN 61000-6-4, EN 50121-9	EN 61000-6-4, EN 50121-9	EN 61000-6-4, EN 50121-9
• for immunity to EMC	EN 61000-6-2, EN 50121-4	EN 61000-6-2, EN 50121-4	EN 61000-6-2, EN 50121-4
• for safety from CSA and UL	in preparation	in preparation	in preparation
standards, specifications, approvals other			
certificate of suitability			
• railway application in accordance with EN 50121-4		Yes	Yes
• railway application in accordance with EN 50125-3		Yes	Yes
IT security for industrial automation systems according to IEC 62443-4-2:2019	Yes	Yes	Yes
standards, specifications, approvals Environmental Product Declaration			
Environmental Product Declaration	Yes	Yes	Yes
Global Warming Potential [CO2 eq]			
• total	991.85 kg	1 274.81 kg	991.85 kg
• during manufacturing	225.96 kg	225.96 kg	225.96 kg
• during operation	765.04 kg	1 048 kg	765.04 kg
• after end of life	0.85 kg	0.85 kg	0.85 kg
product functions general			
MTBF	13.2 a	8.6 a	10.6 a
reference temperature for MTBF determination	40 °C	40 °C	40 °C
reference code			
• according to IEC 81346-2	KF	KF	KF
• according to IEC 81346-2:2019	KFE	KFE	KFE
Warranty period	5 a	5 a	5 a
further information internet links			
internet link			
• to website: Selection guide for cables and connectors	https://support.industry.siemens.com/cs/ww/en/view/109766358	https://support.industry.siemens.com/cs/ww/en/view/109766358	https://support.industry.siemens.com/cs/ww/en/view/109766358
• to web page: selection aid TIA Selection Tool	https://www.siemens.com/tstcloud	https://www.siemens.com/tstcloud	https://www.siemens.com/tstcloud
• to website: Industrial communication	https://www.siemens.com/simatic-net	https://www.siemens.com/simatic-net	https://www.siemens.com/simatic-net
• to web page: SiePortal	https://sieportal.siemens.com/	https://sieportal.siemens.com/	https://sieportal.siemens.com/
• to website: Image database	https://www.automation.siemens.com/bilddb	https://www.automation.siemens.com/bilddb	https://www.automation.siemens.com/bilddb
• to website: CAx-Download-Manager	https://www.siemens.com/cax	https://www.siemens.com/cax	https://www.siemens.com/cax
• to website: Industry Online Support	https://support.industry.siemens.com	https://support.industry.siemens.com	https://support.industry.siemens.com

© Siemens AG 2024

More information

Selection Tool:

To support the selection of SCALANCE network components, the TIA Selection Tool is available at:

www.siemens.com/tst

Ordering overview:

You can find more information on the FastConnect range in the "Cabling technology for communication networks in industry" ordering overview.

© Siemens AG 2024

Overview

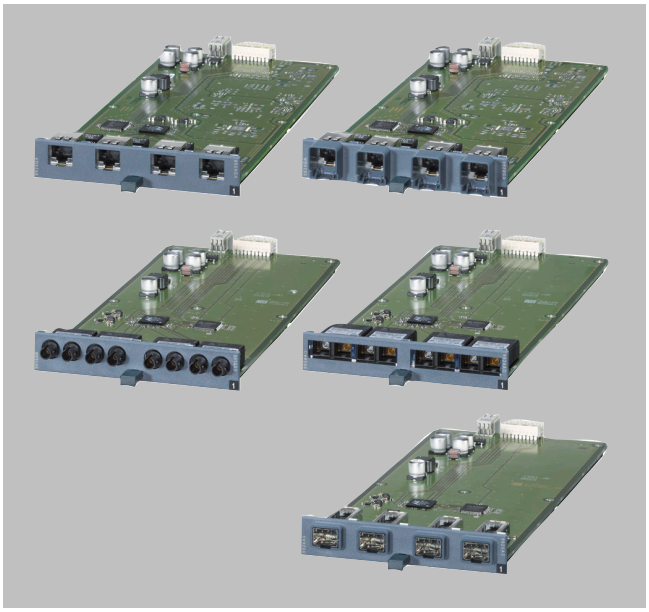

- 4-port media modules for flexible, 4-port-granular equipping of SCALANCE XR-500 Industrial Ethernet switches
- Electrical versions with RJ45 ports are available as are optical versions with ST/BFOC, SC and LC (via SFPs) for the use of multimode and single-mode fiber-optic cables
- Using a 4-port SFP media module, the optional use of fiber-optic SFP plug-in transceivers (small form-factor pluggable) with LC connection technology is possible

Product variants — media modules

Electrical media modules with 4 x 10/100/1 000 Mbps RJ45 ports

- MM992-4CUC with securing collar
- MM992-4CU without securing collar

Optical media modules with 4 x 100 Mbps ST/BFOC ports

- MM991-4
  multimode, glass, up to 5 km
- MM991-4LD
  Single-mode, glass, up to max. 26 km

Optical media modules with 4 x 1 000 Mbps SC ports

- MM992-4
  multimode, glass, up to 750 m
- MM992-4LD
  Single-mode, glass, up to max. 10 km

Optical media modules with 4 x 100/1 000 Mbps for SFP plug-in transceiver

- MM992-4SFP
  For SFP plug-in transceivers with 1 x 100 Mbps or 1 x 1 000 Mbps multimode or single-mode, glass

Benefits

get Designed for Industry

- Unlimited flexibility during network expansions (e.g. more terminal devices), conversion (e.g. switching from copper to fiber-optic cables), or performance enhancement (e.g. from Gigabit to 10 Gigabit) through modular construction using media modules and SFP+ or SFP plug-in transceivers
- Reduction of storage costs and maintenance overhead by focusing on a few basic device versions

Application

Use of media modules in the SCALANCE XR-500 switches enables:

- Extension of networks by subsequent insertion of additional media modules in unused media module slots (possible during operation)
- Extension of networks by subsequent insertion of additional SFP+ or SFP plug-in transceivers in unused SFP+ slots (possible during operation)
- Changing of cabling technology (e.g. conversion from copper to fiber-optic cables, or from multimode to single-mode FOC)
- Change of the data transfer rate (e.g. conversion from SFP plug-in transceivers (1 000 Mbps) to SFP+ plug-in transceivers (10 Gbps)

© Siemens AG 2024

Design

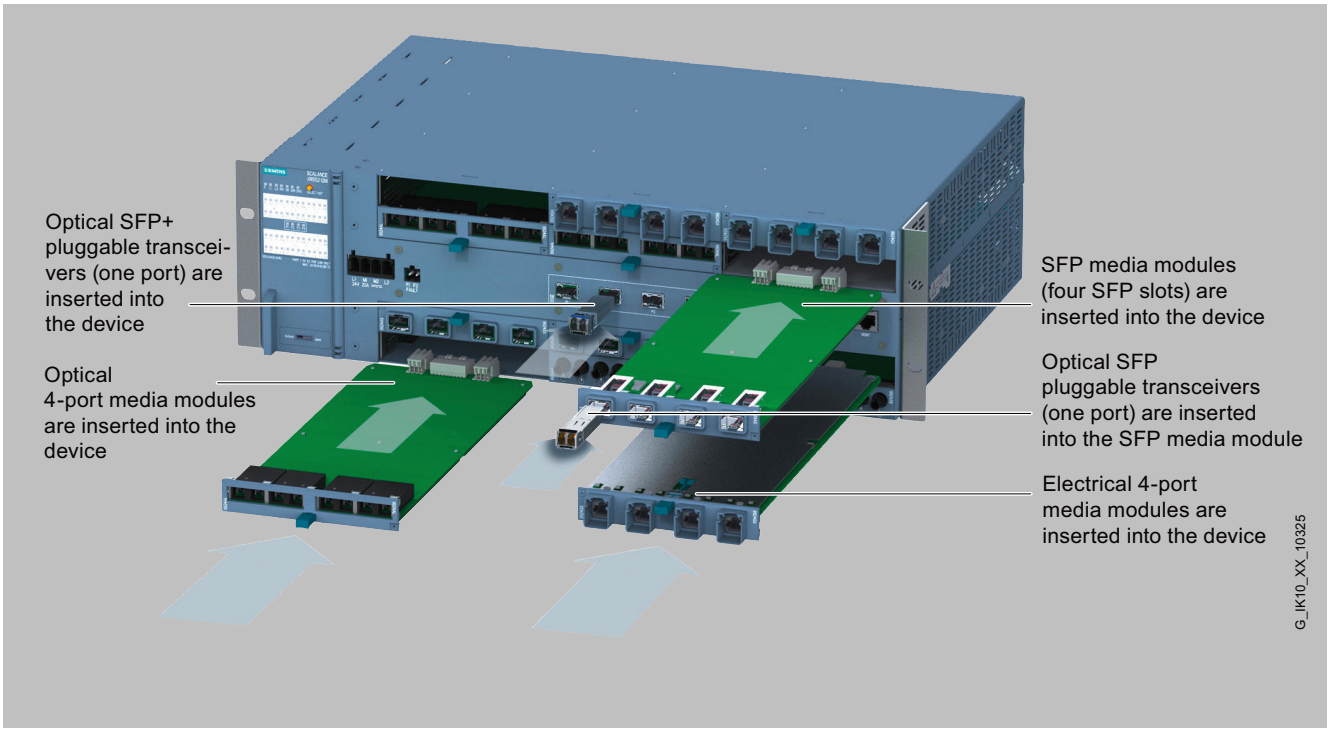

4-port media modules plugged into media module slot and SFP/SFP+ plug-in transceivers in SFP+ slots

		10 Gigabit Ethernet		Gigabit Ethernet			Fast Ethernet			
		10 Gbit/s		10/100/1000 Mbit/s	1000 Mbit/s		100 Mbit/s			
		Optical		Electrical	Optical		Optical		Max. distance	
	Module type	Multimode	Singlemode	Twisted Pair	Multimode	Singlemode	Multimode	Singlemode		
	MM992-4CUC			4x RJ45					100 m	G_IK10_XX_10293
	MM992-4CU[1]			4x RJ45					100 m	
	MM992-4PoE C			4x RJ45					100 m	
	MM992-4PoE[1]			4x RJ45					100 m	
	MM991-4						4x ST/BFOC		5 km	
	MM991-4LD							4x ST/BFOC	26 km	
	MM992-4				4x SC				750 m	
	MM992-4LD					4x SC			10 km	
	MM992-4SFP[3]				4x LC	4x LC	4x LC	4x LC	[2]	

1) Without retaining collar
2) Dependent on the kind of cable and cable quality, transmission speed varies with distance
3) For max. 4x SFP modules

Overview of media modules for SCALANCE X-500

© Siemens AG 2024

Selection and ordering data

	Article No.
Electrical media modules	
with 4 x 10/100/1000 Mbps RJ45 ports, electrical	
• MM992-4CuC	6GK5992-4GA00-8AA0
• MM992-4CU	6GK5992-4SA00-8AA0
Optical media modules	
With 4 x 100 Mbps BFOC ports, optical	
• MM991-4 Multimode, glass, up to 5 km	6GK5991-4AB00-8AA0
• MM991-4LD Single-mode, glass, up to 26 km	6GK5991-4AC00-8AA0
With 4 x 1000 Mbps SC ports, optical	
• MM992-4 Multimode, glass, up to 750 m	6GK5992-4AL00-8AA0
• MM992-4LD Single-mode, glass, up to 10 km	6GK5992-4AM00-8AA0
With 4 x 100/1000 Mbps for SFP plug-in transceiver, optical	
• MM992-4SFP For SFP plug-in transceivers with 1 x 100 or 1 x 1000 Mbps multimode or single-mode, glass	6GK5992-4AS00-8AA0

Accessories

	Article No.
IE FC stripping tool Pre-adjusted stripping tool for fast stripping of Industrial Ethernet FC cables	6GK1901-1GA00
IE FC RJ45 plug 180 RJ45 connector for Industrial Ethernet with rugged metal enclosure and integrated insulation displacement contacts for connecting Industrial Ethernet FC installation cables; with 180° cable outlet; for network components and CPs/CPUs with Industrial Ethernet interface	
• 1 pack = 1 unit	6GK1901-1BB10-2AA0
IE FC TP standard cable GP 2 x 2 (type A) 4-core, shielded TP installation cable for connection to IE FC RJ45 outlet/ IE FC RJ45 plug; PROFINET-compatible; with UL approval; sold by the meter; max. delivery unit 1000 m, minimum order quantity 20 m	6XV1840-2AH10
IE FC RJ45 plug 4 x 2 IE FC RJ45 plug 180 4 x 2; RJ45 connector; Cat6A; (10/100/1000/10000 Mbps) with rugged metal enclosure; FC connection method; for IE FC cable 4 x 2 (AWG 24); 180° cable outlet	
• 1 pack = 1 unit	6GK1901-1BB12-2AA0
IE FC TP standard cable GP 4 x 2 8-core, shielded TP installation cable for connection to IE FC RJ45 modular outlet for universal application; with UL approval; sold by the meter; max. delivery unit 1000 m, minimum order quantity 20 m	6XV1870-2E
IE connecting cable IE FC RJ45 plug 180/IE FC RJ45 plug 180 Preassembled IE FC TP trailing cable GP 2 x 2 (PROFINET type C) with two IE FC RJ45 plug 180, IP20 degree of protection Length:	
• 1.0 m	6XV1871-5BH10
• 5.0 m	6XV1871-5BH50
• 10.0 m	6XV1871-5BN10
IE TP cord RJ45/RJ45 Twisted pair cable 4 x 2 with two RJ45 plugs	
• 1 m	6XV1870-3QH10
• 6 m	6XV1870-3QH60
• 10 m	6XV1870-3QN10
FC FO termination kit Assembly case for on-site assembly of FC SC and FC BFOC connectors to FC FO standard cable; consisting of stripping tool, Kevlar cutters, fiber breaking tool and microscope	6GK1900-1GL00-0AA0

© Siemens AG 2024

Accessories (continued)

	Article No.
FC BFOC plug Screw connector for on-site assembly on FC fiber-optic cable; (1 pack = 20 units + cleaning cloths)	6GK1900-1GB00-0AC0
FC SC plug Screw connector for on-site assembly on FC fiber-optic cable; (1 pack = 10 duplex plugs + cleaning cloths)	6GK1900-1LB00-0AC0
FC FO standard cable GP 62.5/200/230 FC FO standard cable for fixed routing indoors with PVC sheath; sold by the meter; max. delivery unit 1000 m; minimum order quantity 20 m	6XV1847-2A
Multimode FO BFOC connector set For FO standard cable (50/125/1400), FO ground cable (50/125/1400), flexible FO trailing cable, indoor FO cable (62.5/125/900), 20 units	6GK1901-0DA20-0AA0
Multimode FO SC duplex connector set For FO standard cable (50/125/1400), FO ground cable (50/125/1400), flexible FO trailing cable, indoor FC cable (62.5/125/900), 10 units	6GK1901-0LB10-2AA0
LC plug MM[2]	6GK1901-0RB10-2AB0
FO standard cable GP 50/125/1400 [1] [2] Multimode cable, sold by the meter; max. delivery unit 1000 m; minimum order quantity 20 m	6XV1873-2A
Preassembled FO patch cables ***Multimode***	
MM FO cord SC/LC With one SC duplex connector and one LC duplex connector, 1 m	6XV1843-5EH10-0CA0
MM FO cord SC/BFOC With one SC duplex connector and two BFOC connectors, 1 m	6XV1843-5EH10-0CB0
MM FO cord SC/SC With two SC duplex connectors, 1 m	6XV1843-5EH10-0CC0
Single-mode	
SM FO cord SC/LC With one SC duplex connector and one LC duplex connector, 1 m	6XV1843-5FH10-0CA0
SM FO cord SC/BFOC With one SC duplex connector and two BFOC connectors, 1 m	6XV1843-5FH10-0CB0
SM FO cord SC/SC With two SC duplex connectors, 1 m	6XV1843-5FH10-0CC0

1) Special fiber-optic cables, lengths and accessories available on request
2) Special tools and trained personnel are required for preassembling glass fiber-optic cables

© Siemens AG 2024

Technical specifications

Article number product type designation	6GK5992-4AL00-8AA0 MM992-4	6GK5992-4AM00-8AA0 MM992-4LD	6GK5992-4AS00-8AA0 MM992-4SFP
interfaces			
number of electrical/optical connections for network components or terminal equipment maximum	4	4	4
number of electrical connections			
• for SFP plug-in			4
number of optical interfaces for network components or terminal equipment maximum	4	4	
number of 1000 Mbit/s SC ports (LX)		4	
number of 1000 Mbit/s SC ports (SX)	4		
design of the optical interface for network components or terminal equipment	SC	SC	
wavelength of the optical interface	850 nm; Multi-mode	1 310 nm; Single-mode	
connectable optical power relative to 1 mW			
• of the transmitter output minimum	-9.5 dB	-9.5 dB	
• of the transmitter output maximum	-4 dB	-3 dB	
• of the receiver input maximum	-3 dB	-3 dB	
optical sensitivity relating to 1 mW of the receiver input minimum	-17 dB	-21 dB	
attenuation factor of the FOC transmission link minimum necessary	0 dB	0 dB	
range at the optical interface depending on the optical fiber used	0 ... 0.75 km	0 ... 10 km	
ambient conditions			
ambient temperature			
• during operation	0 ... 60 °C	0 ... 60 °C	0 ... 60 °C
• during storage	-40 ... +85 °C	-40 ... +85 °C	-40 ... +85 °C
• during transport	-40 ... +85 °C	-40 ... +85 °C	-40 ... +85 °C
relative humidity at 25 °C without condensation during operation maximum	95 %	95 %	95 %
protection class IP	IP20	IP20	IP20
design, dimensions and weights			
design	Media module	Media module	Media module
width	120.3 mm	120.3 mm	120.3 mm
height	22.3 mm	22.3 mm	22.3 mm
depth	275.5 mm	275.5 mm	275.5 mm
net weight	0.3 kg	0.3 kg	0.3 kg
fastening method	latched	latched	latched
• installation in media module slot	Yes	Yes	Yes
standards, specifications, approvals			
standard			
• for safety from CSA and UL	UL 60950-1, CSA C22.2 No. 60950-1	UL 60950-1, CSA C22.2 No. 60950-2	UL 60950-1, CSA C22.2 No. 60950-3
• for emitted interference	EN 61000-6-4 (Class A)	EN 61000-6-4 (Class A)	EN 61000-6-4 (Class A)
• for interference immunity	EN 61000-6-2	EN 61000-6-2	EN 61000-6-2
certificate of suitability	EN 61000-6-2:2005, EN 61000-6-4:2007	EN 61000-6-2:2005, EN 61000-6-4:2007	EN 61000-6-2:2005, EN 61000-6-4:2007
• CE marking	Yes	Yes	Yes
• C-Tick	Yes	Yes	Yes
• KC approval	Yes	Yes	Yes
• CCC for hazardous zone according to GB standard	Yes; GB3836.1, GB3836.8	Yes; GB3836.1, GB3836.8	Yes; GB3836.1, GB3836.8
• CCC for hazardous zone according to GB standard as marking	Ex nA IIC T4 Gc	Ex nA IIC T4 Gc	Ex nA IIC T4 Gc
• E1 approval	No	No	No

© Siemens AG 2024

Technical specifications (continued)

Article number product type designation	6GK5992-4AL00-8AA0 MM992-4	6GK5992-4AM00-8AA0 MM992-4LD	6GK5992-4AS00-8AA0 MM992-4SFP
Marine classification association			
• French marine classification society (BV)	Yes	Yes	Yes
further information internet links			
internet link			
• to web page: SiePortal	https://sieportal.siemens.com/	https://sieportal.siemens.com/	https://sieportal.siemens.com/
• to website: Image database	https://www.automation.siemens.com/bilddb	https://www.automation.siemens.com/bilddb	https://www.automation.siemens.com/bilddb
• to website: CAx-Download-Manager	http://www.siemens.com/cax	http://www.siemens.com/cax	http://www.siemens.com/cax
• to website: Industry Online Support	https://support.industry.siemens.com	https://support.industry.siemens.com	https://support.industry.siemens.com
security information			
security information	Siemens provides products and solutions with industrial cybersecurity functions that support the secure operation of plants, systems, machines and networks. In order to protect plants, systems, machines and networks against cyber threats, it is necessary to implement – and continuously maintain – a holistic, state-of-the-art industrial cybersecurity concept. Siemens' products and solutions constitute one element of such a concept. Customers are responsible for preventing unauthorized access to their plants, systems, machines and networks. Such systems, machines and components should only be connected to an enterprise network or the internet if and to the extent such a connection is necessary and only when appropriate security measures (e.g. firewalls and/or network segmentation) are in place. For additional information on industrial cybersecurity measures that may be implemented, please visit www.siemens.com/cybersecurity-industry. Siemens' products and solutions undergo continuous development to make them more secure. Siemens strongly recommends that product updates are applied as soon as they are available and that the latest product versions are used. Use of product versions that are no longer supported, and failure to apply the latest updates may increase customer's exposure to cyber threats. To stay informed about product updates, subscribe to the Siemens Industrial Cybersecurity RSS Feed under https://www.siemens.com/cert. (V4.7)	Siemens provides products and solutions with industrial cybersecurity functions that support the secure operation of plants, systems, machines and networks. In order to protect plants, systems, machines and networks against cyber threats, it is necessary to implement – and continuously maintain – a holistic, state-of-the-art industrial cybersecurity concept. Siemens' products and solutions constitute one element of such a concept. Customers are responsible for preventing unauthorized access to their plants, systems, machines and networks. Such systems, machines and components should only be connected to an enterprise network or the internet if and to the extent such a connection is necessary and only when appropriate security measures (e.g. firewalls and/or network segmentation) are in place. For additional information on industrial cybersecurity measures that may be implemented, please visit www.siemens.com/cybersecurity-industry. Siemens' products and solutions undergo continuous development to make them more secure. Siemens strongly recommends that product updates are applied as soon as they are available and that the latest product versions are used. Use of product versions that are no longer supported, and failure to apply the latest updates may increase customer's exposure to cyber threats. To stay informed about product updates, subscribe to the Siemens Industrial Cybersecurity RSS Feed under https://www.siemens.com/cert. (V4.7)	Siemens provides products and solutions with industrial cybersecurity functions that support the secure operation of plants, systems, machines and networks. In order to protect plants, systems, machines and networks against cyber threats, it is necessary to implement – and continuously maintain – a holistic, state-of-the-art industrial cybersecurity concept. Siemens' products and solutions constitute one element of such a concept. Customers are responsible for preventing unauthorized access to their plants, systems, machines and networks. Such systems, machines and components should only be connected to an enterprise network or the internet if and to the extent such a connection is necessary and only when appropriate security measures (e.g. firewalls and/or network segmentation) are in place. For additional information on industrial cybersecurity measures that may be implemented, please visit www.siemens.com/cybersecurity-industry. Siemens' products and solutions undergo continuous development to make them more secure. Siemens strongly recommends that product updates are applied as soon as they are available and that the latest product versions are used. Use of product versions that are no longer supported, and failure to apply the latest updates may increase customer's exposure to cyber threats. To stay informed about product updates, subscribe to the Siemens Industrial Cybersecurity RSS Feed under https://www.siemens.com/cert. (V4.7)

More information

Selection Tool:

To support the selection of SCALANCE network components, the TIA Selection Tool is available at:

www.siemens.com/tst

© Siemens AG 2024

Overview

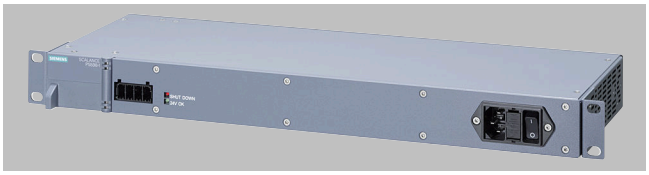

- The 24 V DC power supply SCALANCE PS598 is designed for installation in 19" control cabinets or for direct mounting on SCALANCE XR-500 Industrial Ethernet switches. It features degree of protection IP20.
- 300 W output power at an input voltage range of 85 V AC to 264 V (50/60 Hz) and an operating temperature of 0 °C to +60 °C

Benefits

get Designed for Industry

- Global application due to wide-range input (85 to 264 V AC)
- High reliability since short-circuit proof, secure against no-load operation, and able to bridge short breaks in the mains power

Design

- Non-heating apparatus socket for connecting to the AC network of 85 to 264 V AC (non-heating apparatus cable not included in the scope of supply; can be ordered optionally on country-specific basis)
- Terminal block for universal supply of products with 24 V DC input
- Plug-in contact for direct connection on the rear of the SCALANCE XR-500 Industrial Ethernet switches (mounting kit included in scope of supply of SCALANCE XR-500)
- Operating temperatures from 0°C to +60°C
- IP20 degree of protection
- Optimized for installation in 19" control cabinet or for direct mounting on SCALANCE XR-500 (SCALANCE XR-500 and power supply unit are mounted in the 19" control cabinet as a single unit)
- LEDs for indicating the status information (power, operating state)

Selection and ordering data

	Article No.
Power supplies for SCALANCE X-500 24 V power supplies are designed for installation in 19" control cabinets or for direct mounting on SCALANCE X-500 Industrial Ethernet switches; degree of protection IP20	
SCALANCE PS598-1 300 W output power, input voltage range of 85 V to 264 V AC, operating temperature of 0 °C to +60 °C	6GK5598-1AA00-3AA0

Accessories

	Article No.
IEC cable	
• Grounded Continental European plug, region: D/F/NL/ESP/B/A/S/FIN	6ES7900-0AA00-0XA0
• Grounded British plug; region: UK	6ES7900-0BA00-0XA0
• Grounded Swiss plug; region: CH	6ES7900-0CA00-0XA0
• Grounded North American and Japanese plug; region: USA	6ES7900-0DA00-0XA0
• Grounded Italian plug; region: Italy	6ES7900-0EA00-0XA0
• Grounded Chinese plug; region: China	6ES7900-0FA00-0XA0

© Siemens AG 2024

Technical specifications

Article number product type designation	6GK5598-1AA00-3AA0 Power Supply PS598-1
type of current supply	300 W, input: 85-264 V, output:DC 24
electrical data input	
voltage curve at input	AC single phase
supply voltage at AC	85 ... 264 V
supply voltage 1 at AC rated value	230 V
design of input wide range input	Yes
overvoltage category	Category II (20 A rated branch circuit)
buffering time for rated value of the output current in the event of power failure minimum	16 ms
line frequency	
• 1 rated value	50 Hz
• 2 rated value	60 Hz
line frequency	47 ... 63 Hz
input current at rated input voltage 230 V rated value	1.8 A
current limitation of inrush current at 25 °C maximum	40 A
fuse protection type at input	replaceable
electrical data output	
voltage curve at output	Controlled, isolated DC voltage
output voltage	
• at DC rated value	24 V
display version for normal operation	Green LED for 24 V ok and fault LED
behavior of the output voltage when switching on	Overshoot of Ua < 5 %
startup delay time maximum	1.5 s
voltage increase time of the output voltage maximum	15 ms
output current	
• rated value	12.5 A
• rated range	0 ... 12.5 A
supplied active power typical	300 W
product feature parallel switching of channels	Yes
number of parallel-switched equipment resources for increasing the power	2
efficiency in percent	87 %
power loss [W]	39 W
electrical data closed-loop control	
relative overall tolerance of the voltage	2 %
residual ripple maximum	0.36 V
voltage peak maximum	240 V
relative control precision of the output voltage	
• on slow fluctuation of input voltage	0.2 %
• on slow fluctuation of ohm loading	0.4 %
• load step of resistive load 50/100/50 % typical	3.25 %
• with rapid fluctuation of the input voltage by +/- 15% typical	0.8 %
setting time	
• load step 50 to 100% typical	2 ms
• load step 100 to 50% typical	2 ms

Technical specifications (continued)

Article number product type designation	6GK5598-1AA00-3AA0 Power Supply PS598-1
electrical data protection and monitoring	
design of the overvoltage protection at output	< 37 V
response value current limitation typical	1.15 A
property of the output short-circuit proof	Yes
design of short-circuit protection	Electronic shutdown, automatic restart
electrical data safety	
galvanic isolation between input and output	Yes
galvanic isolation	Safety extra-low output voltage Uout acc. to EN 60950-1 and EN 50178
operating resource protection class	Class I
leakage current	
• maximum	3 mA
• typical	0.858 mA
interfaces	
type of electrical connection	
• at input	IEC plug
• at output	for plugging into basic device or screw terminal in accordance with specification
design, dimensions and weights	
width	446 mm
height	44 mm
depth	140 mm
net weight	1.7 kg
product feature of the enclosure housing can be lined up	No
fastening method	Plugged into the basic unit or rack mounted
• 19-inch installation	Yes
• wall mounting	No
• standard rail mounting	No
• S7-300 rail mounting	No
ambient conditions	
ambient temperature	
• during operation	60 °C
• during storage	-25 ... +70 °C
• during transport	-25 ... +70 °C
• note	Operation with integral fan, non-replaceable
environmental category according to IEC 60721	Climate class 3K3, without condensation
protection class IP	IP20
standards, specifications, approvals	
standard	
• for safety from CSA and UL	UL 60950-1, CSA C22.2 No. 60950-1
• for emitted interference	EN 55022 (Class B)
• for interference immunity	EN 61000-6-2
certificate of suitability	EN 55022, EN 61000-6-4

© Siemens AG 2024

Technical specifications (continued)

Article number product type designation	6GK5598-1AA00-3AA0 Power Supply PS598-1
• CE marking	Yes
• C-Tick	Yes
• E1 approval	No
• E1 approval	No
• railway application in accordance with EN 50155	No
• railway application in accordance with EN 50124-1	No
• IEC 61850-3	No
MTBF	17.47 a
standards, specifications, approvals Environmental Product Declaration	
Environmental Product Declaration	Yes
Global Warming Potential [CO2 eq]	
• total	595.15 kg
• during manufacturing	62.11 kg
• during operation	532.64 kg
• after end of life	0.4 kg
further information internet links	
internet link	
• to website: Selection guide for cables and connectors	https://support.industry.siemens.com/cs/ww/en/view/109766358
• to web page: selection aid TIA Selection Tool	https://www.siemens.com/tstcloud
• to website: Industrial communication	https://www.siemens.com/simatic-net
• to web page: SiePortal	https://sieportal.siemens.com/
• to website: Image database	https://www.automation.siemens.com/bilddb
• to website: CAx-Download-Manager	https://www.siemens.com/cax
• to website: Industry Online Support	https://support.industry.siemens.com
security information	
security information	Siemens provides products and solutions with industrial cybersecurity functions that support the secure operation of plants, systems, machines and networks. In order to protect plants, systems, machines and networks against cyber threats, it is necessary to implement – and continuously maintain – a holistic, state-of-the-art industrial cybersecurity concept. Siemens' products and solutions constitute one element of such a concept. Customers are responsible for preventing unauthorized access to their plants, systems, machines and networks. Such systems, machines and components should only be connected to an enterprise network or the internet if and to the extent such a connection is necessary and only when appropriate security measures (e.g. firewalls and/or network segmentation) are in place. For additional information on industrial cybersecurity measures that may be implemented, please visit www.siemens.com/cybersecurity-industry. Siemens' products and solutions undergo continuous development to make them more secure.

Technical specifications (continued)

Article number product type designation	6GK5598-1AA00-3AA0 Power Supply PS598-1
	Siemens strongly recommends that product updates are applied as soon as they are available and that the latest product versions are used. Use of product versions that are no longer supported, and failure to apply the latest updates may increase customer's exposure to cyber threats. To stay informed about product updates, subscribe to the Siemens Industrial Cybersecurity RSS Feed under https://www.siemens.com/cert. (V4.7)

More information

Selection Tool:

To support the selection of SCALANCE network components, the TIA Selection Tool is available at:

www.siemens.com/tst

© Siemens AG 2024

Overview

Accessories for Industrial Ethernet

- **C-PLUG**

  Removable data storage medium that supports the fast and easy replacement of SIMATIC NET components without a programming device in the event of a fault.

- **CLP**

  Removable data storage medium that supports the fast and easy replacement of components with a CLP slot (e.g. SCALANCE W1788) without a programming device in the event of a fault.

- **CLP W700**

  Removable data storage medium that is used to enable iFeatures and security features and that supports the quick and easy replacement of SCALANCE W components without a programming device in the event of a fault.

- **CLP SINEMA RC**

  Removable data storage medium that enables SCALANCE MUM85X to connect to SINEMA Remote Connect and supports easy device replacement in the event of a fault.

- **KEY-PLUG SINEMA RC**

  Removable data storage medium that enables connection to the remote network management software, SINEMA Remote Connect, in SCALANCE devices.

- **KEY-PLUG W700**

  Removable data storage medium that is used to enable iFeatures and security features and that supports the quick and easy replacement of SCALANCE W components without a programming device in the event of a fault.

- **Plug-in transceivers for SCALANCE**

  Enable you to flexibly equip network components of the SCALANCE family with an appropriate SFP slot for optical connections

- **PS791-1PRO power supply**

  AC/DC power supply unit with IP65 degree of protection for the SCALANCE X208PRO and SCALANCE X204IRT PRO Industrial Ethernet switches.

© Siemens AG 2024

Overview

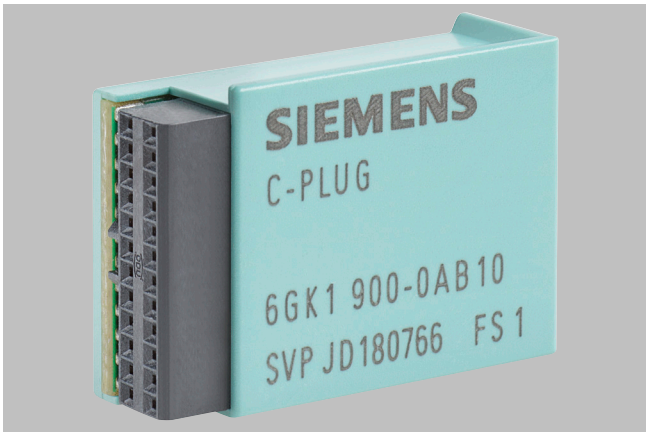

C-PLUG

Benefits

get Designed for Industry

C-PLUG:

- Fast and easy replacement of SIMATIC NET components without reconfiguration of the spare part.
- Device replacement without the need for specially trained personnel, programming devices or PCs
- Downtimes of network segments and connected Industrial Ethernet nodes are minimized if a fault occurs.
- Automatic backup of configuration and project engineering data for SIMATIC NET components
- The C-PLUG can also be used to store application data such as documentation or web pages

Application

C-PLUG:

The C-PLUG is used if the replacement of network components or communication modules needs to be quick and simple when a fault occurs, without having to configure the replacement and without the need for specialist personnel. It can be used in all SIMATIC NET products with a C-PLUG slot.

Design

C-PLUG:

The C-PLUG is offered in two designs:

- C-PLUG with IP20 degree of protection
- C-PLUG with IP20 degree of protection and with conformal coating for use in harsh environments.

Degree of protection for IP65/67 components is ensured by the design of the target device. The power supply is also provided by the terminal device.

The C-PLUG is inserted in the designated slot of the SIMATIC NET component. The configuration data are automatically saved to the C-PLUG during device start-up and reconfiguring. If a device needs to be replaced, the C-PLUG is simply removed from the failed component and plugged into the replacement device. The replacement device installed in the network or automation system now starts up automatically with the same device configuration as the failed device.

To prevent unintentional removal or falling out, the C-PLUG slot is usually located on the rear of the devices.

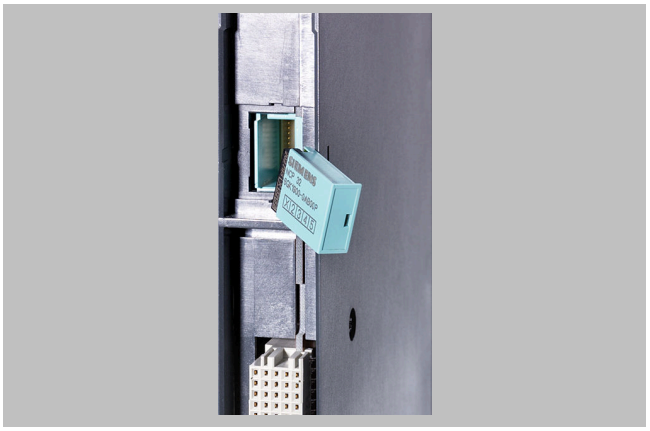

Plugging the C-PLUG into the rear of the CP 443-1 Advanced

Plugging the C-PLUG into the SCALANCE XM408-8C switch

© Siemens AG 2024

Function

C-PLUG:

During start-up, the device automatically backs up the configuration data on an unwritten C-PLUG (delivery state) that has been plugged into a SIMATIC NET component. Changes to the configuration during operation are also saved on the C-PLUG without any additional operator intervention being necessary. During startup, an unconfigured device automatically loads the configuration data from an inserted, written C-PLUG, provided the data were written by a compatible device type.

Diagnostics

Incorrect use of the C-PLUG, such as inserting a C-PLUG containing the configuration of a different device group or general malfunctions of the C-PLUG, are indicated by diagnostics mechanisms of the respective terminal device (LEDs, PROFINET, SNMP, web-based management, etc.).

The following devices of the named product lines have a C-PLUG slot:

Product line	C-PLUG 6GK1900-0AB00	C-PLUG 6GK1900-0AB10
SCALANCE X Industrial Ethernet switches	SCALANCE X-200	SCALANCE XC-200, SCALANCE XP-200
	-	SCALANCE XF-200 BA
	-	SCALANCE XF-200BA DNA
	SCALANCE X-300 (included in scope of delivery)	-
	SCALANCE X-400 (included in scope of delivery)	SCALANCE XM-400 (included in scope of delivery)
	-	SCALANCE XR-500 (included in scope of delivery)
SCALANCE S Security Modules	SCALANCE S-600	SCALANCE S-615
	-	SCALANCE SC-600
Industrial Wireless LAN SCALANCE W	-	W78x, W77x IWLAN access points
	-	IWLAN client modules W74x, W73x
SCALANCE M industrial modems and routers	-	SCALANCE M81x
	-	SCALANCE M826
	-	SCALANCE M87x
System connections for SIMATIC S7	CP 443-1 Advanced (included in scope of delivery)	-
	CP 343-1 Advanced (included in scope of delivery)	-
	CP 343-1 ERPC (included in scope of delivery)	-
Gateways	IE/PB LINK PN IO	-
	IE/AS-i LINK PN IO	-
	DP/AS-i LINK Advanced	-

Note:

For all SIMATIC-NET components that are designed for more severe environmental conditions (e.g. SCALANCE XP-200EEC), the C-PLUG conformal coating (6GK1900-0AQ00) is also suitable.

Selection and ordering data

	Article No.
C-PLUG Removable data storage medium for easy replacement of devices in case of error. For storing configuration and application data. Can be used in the following SIMATIC NET products with PLUG slots:	
• **SCALANCE XC-200, XP-200, XM-400, XR-500, M-800, S615 and W-700**	**6GK1900-0AB10**

Technical specifications

Article No.	6GK1900-0AB10
Supply voltage	Via terminal device
Power loss	0.015 mW
Installation	Can be plugged into C-PLUG slot
Constructional design	
• Dimensions (W x H x D) in mm	24.3 x 17 x 8.1
• Weight	Approx. 5 g
Memory capacity	256 MB
Degree of protection	IP20

More information

Selection Tool:

The TIA Selection Tool supports the selection of corresponding network components and software and is available at:

www.siemens.com/tst

© Siemens AG 2024

Overview

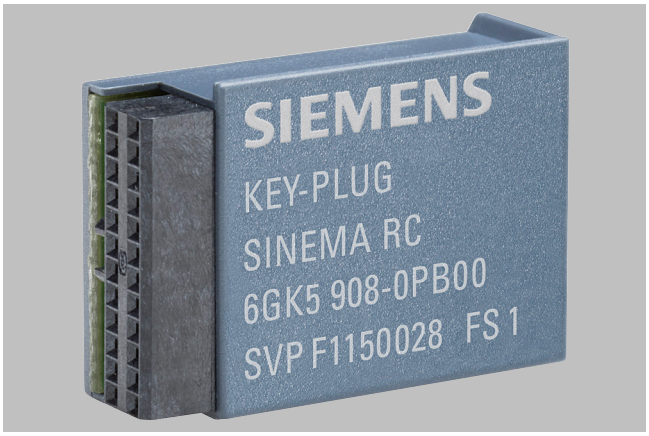

KEY-PLUG SINEMA RC

Benefits

get Designed for Industry

KEY-PLUG:

- The KEY-PLUGs include all C-PLUG functions
- In addition, the SINEMA RC KEY-PLUG allows convenient remote access to remote machines and systems by enabling the connection to the management software for remote networks, SINEMA Remote Connect in SCALANCE devices

Application

KEY-PLUG:

The KEY-PLUGs include all the C-PLUG functions and additionally enable supplementary industrial functions.

The SINEMA RC KEY-PLUG is a removable data storage medium for enabling connection to SINEMA Remote Connect for S615 and SCALANCE M. It is also used for simple device replacement if a fault occurs, and for storing configuration data.

Design

KEY-PLUG:

The SINEMA RC KEY-PLUG is offered in a version with degree of protection IP20. Degree of protection for IP65/67 components is ensured by the design of the target device. The power supply is also provided by the terminal device.

The KEY-PLUG is inserted in the plug compartment of the SCALANCE component.

To prevent unintentional removal or falling out, the plug slot is usually located on the rear of the devices.

Plugging the KEY-PLUG into the PLUG slot of a SCALANCE network component

Function

KEY-PLUG:

The KEY-PLUGs include all the C-PLUG functions and additionally enable supplementary industrial functions.

The SINEMA RC KEY-PLUG is a removable data storage medium for enabling connection to SINEMA Remote Connect for S615 and SCALANCE M. It is also used for simple device replacement if a fault occurs, and for storing configuration data.

Selection and ordering data

	Article No.
KEY-PLUG SINEMA RC Removable data storage medium for enabling connection to SINEMA Remote Connect for simple device replacement if a fault occurs, and for storing configuration data	**6GK5908-0PB00**

Technical specifications

Article No.	6GK590B-0PB00
Supply voltage	Via terminal device
Power loss	0.015 mW
Installation	Can be plugged into KEY-PLUG slot
Constructional design	
• Dimensions (W x H x D) in mm	24.3 x 17 x 8.1
• Weight	Approx. 5 g
Memory capacity	256 MB
Degree of protection	IP20

© Siemens AG 2024

More information

Selection Tool:

The TIA Selection Tool supports the selection of corresponding network components and software and is available at:

www.siemens.com/tst

© Siemens AG 2024

Overview

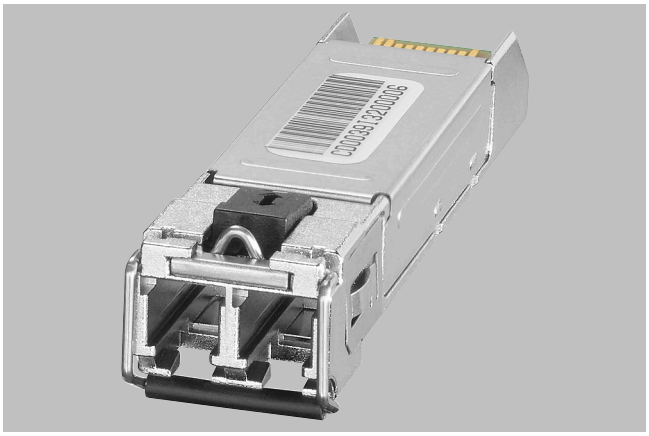

- Plug-in transceivers allow you to flexibly equip network components of the SCALANCE family with a corresponding SFP slot for optical connections.
- An overview of the devices with SFP slot can be found in the matrix below.
- With an operating temperature range from -40 °C to +85 °C, the plug-in transceivers are especially suitable for use in demanding environments.
- All specified plug-in transceivers are tested for use with SCALANCE devices
- There are different versions that differ depending on suitable fiber types, range, and bandwidth

Product versions

SFP (small form-factor) plug-in transceivers can be directly plugged in (e.g. on the SCALANCE SC646-2C) or connectable via media modules (e.g. MM992-2SFP for modular X-300 Industrial Ethernet switches).

Optical SFP plug-in transceivers with 1 x 100 Mbps LC port

- SFP991-1 multimode, glass, up to 5 km: variants with and without coated printed circuit boards (conformal coating)
- SFP991-1A multimode, glass, up to 5 km
- SFP991-1LD, single-mode, glass, up to 26 km: variants with and without coated printed circuit boards (conformal coating)
- SFP991-1LD A single-mode, glass, up to 26 km
- SFP991-1LH+, single-mode, glass, up to 70 km
- SFP991-1ELH200 single-mode, glass, up to 200 km

Optical SFP plug-in transceivers with 1 × 1 000 Mbps LC port

- SFP992-1 multimode, glass, up to 750 m: variants with and without coated printed circuit boards (conformal coating)
- SFP992-1+ multimode, glass, up to 2 km
- SFP992-1BXMR multimode, glass, up to 500 m, bidirectional
- SFP992-1BXMT multimode, glass, up to 500 m, bidirectional
- SFP992-1LD, single-mode, glass, up to 10 km: variants with and without coated printed circuit boards (conformal coating)
- SFP992-1BX10R, single-mode, glass, up to 10 km, bidirectional
- SFP992-1BX10T, single-mode, glass, up to 10 km, bidirectional

Overview (continued)

- SFP992-1LD+, single-mode, glass, up to 30 km
- SFP992-1LH, single-mode, glass, up to 40 km
- SFP992-1LH+, single-mode, glass, up to 70 km
- SFP992-1ELH single-mode, glass, up to 120 km

Optical SFP plug-in transceivers with 1 × 10 000 Mbps LC port

- SFP993-1, multimode, glass, up to 550 m
- SFP993-1LD, single-mode, glass, up to 10 km
- SFP993-1LH, single-mode, glass, up to 40 km

Benefits

get Designed for Industry

- Modular system permits cost savings. The modular system facilitates easy setup of electrical and optical Industrial Ethernet networks as well as modification of the network topology and port type to suit the plant structure, with expansion possible at any time
- Easy integration of SCALANCE products with pure 1 000 Mbps SFP interfaces (such as SCALANCE XC216-4C G) into existing 100 Mbps networks by using active SFPs, SFP991-1A and SFP991-1LD A
- Integrated industrial network for data, speech, and video; high performance due to Gigabit ports
- Bandwidths from 100 Mbps to 10 Gbps

© Siemens AG 2024

Design

- Operating temperature range of the SFP plug-in transceivers from -40 °C to +85 °C
- SFP plug-in transceivers have an LC connection
- IP20 degree of protection

Electrically pre-assembled SFP+/SFP+ connecting cables with 10 Gbps

The SFP+/SFP+ IE connecting cable is pre-assembled at both ends and suitable for the transmission of 10 Gbps Ethernet. The cables have SFP+ connectors for use in the SFP+ slots and therefore offer the possibility of connecting switches cost-effectively over short distances with a bandwidth of 10 Gbps. The switches for which the SFP+/SFP+ connecting cables can be used can be found in the matrix below.

- IE connecting cable SFP+/SFP+ 1 m;
  Twinax copper cable with a length of 1 m
- IE connecting cable SFP+/SFP+ 2 m;
  Twinax copper cable with a length of 2 m
- IE connecting cable SFP+/SFP+ 7 m;
  Twinax copper cable with a length of 7 m

		10 Gigabit Ethernet		Gigabit Ethernet			Fast Ethernet		
		10 Gbit/s		10/100/1000 Mbit/s	1000 Mbit/s		100 Mbit/s		
		Optical		Electrical	Optical		Optical		Max. distance
	Module type	Multimode	Singlemode	Twisted Pair	Multimode	Singlemode	Multimode	Singlemode	
	SFP991-1[2]						1x LC		5 km
	SFP991-1[1) 2)]						1x LC		5 km
	SFP991-1A[2]						1x LC		5 km
	SFP991-1LD[2]							1x LC	26 km
	SFP991-1LD[1) 2)]							1x LC	26 km
	SFP991-1LD A[2]							1x LC	26 km
	SFP991-1LH+[2]							1x LC	70 km
	SFP991-1ELH200[2]							1x LC	200 km
	SFP992-1[3]				1x LC				750 m
	SFP992-1[1) 3)]				1x LC				750 m
	SFP992-1+[3]				1x LC				2 km
	SFP992-1LD[3]					1x LC			10 km
	SFP992-1LD[1) 3)]					1x LC			10 km
	SFP992-1LD+[3]					1x LC			30 km
	SFP992-1BXMT[5]				1x LC				500 m
	SFP992-1BXMR[5]				1x LC				500 m
	SFP992-1BX10T[5]					1x LC			10 km
	SFP992-1BX10R[5]					1x LC			10 km
	SFP992-1LH[3]					1x LC			40 km
	SFP992-1LH+[3]					1x LC			70 km
	SFP992-1ELH[3]					1x LC			120 km
	SFP+-Module[4]								
	SFP993-1	1x LC							550 m
	SFP993-1LD		1x LC						10 km
	SFP993-1LH		1x LC						40 km
	IE Cable SFP+/SFP+	2x LC							[6]

G_IK10_XX_10442

1) Coated PCBs (conformal coating)
2) Can only be inserted in SFP slot
3) Can only be inserted in SFP/SFP+ slot
4) Can only be inserted in SFP+ slot
5) Bidirectional
6) Lengths available in 1 m, 2 m, 7 m

Enlarge image

Portfolio overview of SFP plug-in transceivers

© Siemens AG 2024

Design (continued)

		100 MBit								1000 MBit													10000 MBit				IE Cable SFP+/SFP+
	Reference	SFP991-1 (C) 6GK5991-1AD00-8AA0	SFP991-1 (C) 6GK5991-1AD00-8FA0	SFP991-1A 6GK5991-1AD00-8EA0	SFP991-1LD (C) 6GK5991-1AF00-8TA0	SFP991-1LD 6GK5991-1AF00-8FA0	SFP991-1LDA 6GK5991-1AF00-8EA0	SFP991-1LHX 6GK5991-1AF00-8GA0	SFP991-1EL(ER) 6GK5991-1AE00-8AA0	SFP992-1 6GK5992-1AL00-8AA0	SFP992-1 (C) 6GK5992-1AL00-8FA0	SFP992-1+ 6GK5992-1AG00-8AA0	SFP992-1LD 6GK5992-1AM00-8AA0	SFP992-1LD (C) 6GK5992-1AM00-8TA0	SFP992-1LD+ 6GK5992-1AM00-8AA0	SFP992-1BXM/T 6GK5992-1AU10-8TA0	SFP992-1BXM/R 6GK5992-1AU10-8FA0	SFP992-1BXU/T 6GK5992-1AM00-8TA0	SFP992-1BXU/R 6GK5992-1AM00-8FA0	SFP992-1LH 6GK5992-1AP00-8AA0	SFP992-1LH 6GK5992-1AP00-8AA0	SFP992-1ELH 6GK5992-1AQ00-8AA0	SFP993-1 6GK5993-1AT10-8AA0	SFP993-1LD 6GK5993-1AU00-8AA0	SFP993-1LH 6GK5993-1AV00-8AA0		E Cable SFP+/SFP+ 1m 6GK5991-2CB00-0AA1	E Cable SFP+/SFP+ 2m 6GK5991-2CB00-0AA2	E Cable SFP+/SFP+ 7m 6GK5991-2CB00-0AA7
Type of fibre		MM	MM	MM	SM	SM	SM	SM	SM	MM	MM	MM	SM	SM	SM	MM	MM	SM	SM	SM	SM	SM	MM	SM	SM		CU	CU	CU
Distance (KM)		5	5	5	26	26	26	70	200	0,75	0,75	2	10	10	30	0,50	0,50	10	10	40	70	120	0,55	10	40	Distance (m)	1	2	7
XR-100																													
XR108-2PoE WG										•	•	•	•	•	•	•	•	•	•	•	•	•	•	•	•		•	•	•
XCM-100																													
XCM102		•	•		•	•		•	•	•	•	•	•	•	•	•	•	•	•	•	•	•							
XCM108PoE										•	•	•	•	•	•	•	•	•	•	•	•	•	•	•	•				
XCH108PoE										•	•	•	•	•	•	•	•	•	•	•	•	•	•	•	•				
XC-200																													
XC206-2 SFP		•	•		•	•		•	•	•	•	•	•	•	•	•	•	•	•	•	•	•							
XC206-2 SFP EEC		•	•		•	•		•	•	•	•	•	•	•	•	•	•	•	•	•	•	•							
XC206-2 SFP G				•			•			•	•	•	•	•	•	•	•	•	•	•	•	•							
XC206-2 SFP G PoE				•			•			•	•	•	•	•	•	•	•	•	•	•	•	•	•	•	•		•	•	
XC206-2 SFP G EEC				•			•			•	•	•	•	•	•	•	•	•	•	•	•	•							
XC206-2 SFP G PoE EEC				•			•			•	•	•	•	•	•	•	•	•	•	•	•	•	•	•	•		•	•	
XC216-4C				•			•			•	•	•	•	•	•	•	•	•	•	•	•	•							
XC216-4C G				•			•			•	•	•	•	•	•	•	•	•	•	•	•	•							
XC216-3 G PoE	2,3			•			•			•	•	•	•	•	•	•	•	•	•	•	•	•	•	•	•		•	•	
XC216-4C G EEC				•			•			•	•	•	•	•	•	•	•	•	•	•	•	•							
XC224-4C G EEC				•			•			•	•	•	•	•	•	•	•	•	•	•	•	•							
XC224-4C G				•			•			•	•	•	•	•	•	•	•	•	•	•	•	•							
XC-300																													
XC316-8										•	•	•	•	•	•	•	•	•	•	•	•	•	•	•	•				
XC319-4										•	•	•	•	•	•	•	•	•	•	•	•	•	•	•	•				
XC324-4										•	•	•	•	•	•	•	•	•	•	•	•	•	•	•	•				
XC324-4EEC										•	•	•	•	•	•	•	•	•	•	•	•	•	•	•	•				
XR-300																													
XR302-32	2,3	•	•		•	•		•	•	•	•	•	•	•	•	•	•	•	•	•	•	•	•	•	•		•	•	•
XR326-8	2,3									•	•	•	•	•	•	•	•	•	•	•	•	•	•	•	•		•	•	•
XR326-8EEC	2,3									•	•	•	•	•	•	•	•	•	•	•	•	•	•	•	•		•	•	•
XR322-12	2,3	•	•		•	•		•	•	•	•	•	•	•	•	•	•	•	•	•	•	•	•	•	•		•	•	•
XR326-2C PoE WG										•	•	•	•	•	•	•	•	•	•	•	•	•	•	•	•				
XR328-4C WG				•			•			•	•	•	•	•	•	•	•	•	•	•	•	•							
XR324-12M	1	•	•		•	•		•	•	•	•	•	•	•	•					•	•	•							
XR324-4M PoE	1	•	•		•	•		•	•	•	•	•	•	•	•					•	•	•							
XR324-4M EEC	1	•	•		•	•		•	•	•	•	•	•	•	•					•	•	•							
XCM-300																													
XCM324										•	•	•	•	•	•	•	•	•	•	•	•	•	•	•	•				
XCM328										•	•	•	•	•	•	•	•	•	•	•	•	•	•	•	•				
XCH-300																													
XCH328										•	•	•	•	•	•	•	•	•	•	•	•	•	•	•	•				
XRM-300																													
XRM334	2,3	•	•		•	•		•	•	•	•	•	•	•	•	•	•	•	•	•	•	•	•	•	•				
XRH-300																													
XRH334										•	•	•	•	•	•	•	•	•	•	•	•	•	•	•	•				
XM-400																													
XM408-8C		•	•		•	•		•	•	•	•	•	•	•	•	•	•	•	•	•	•	•							
XM416-4C		•	•		•	•		•	•	•	•	•	•	•	•	•	•	•	•	•	•	•							
PE400-8 SFP		•	•		•	•		•	•	•	•	•	•	•	•	•	•	•	•	•	•	•							
XC-400																													
XC416-8										•	•	•	•	•	•	•	•	•	•	•	•	•	•	•	•				
XC424-4										•	•	•	•	•	•	•	•	•	•	•	•	•	•	•	•				
XR-500																													
XR502-32	2,3	•	•		•	•		•	•	•	•	•	•	•	•	•	•	•	•	•	•	•	•	•	•		•	•	•
XR522-12	2,3	•	•		•	•		•	•	•	•	•	•	•	•	•	•	•	•	•	•	•	•	•	•		•	•	•
XR524-8C		•	•		•	•		•	•	•	•	•	•	•	•	•	•	•	•	•	•	•							
XR526-8	2,3									•	•	•	•	•	•	•	•	•	•	•	•	•	•	•	•		•	•	•
XR526-8C	2,3	•	•		•	•		•	•	•	•	•	•	•	•	•	•	•	•	•	•	•	•	•	•		•	•	•
XR528-6M	2,3	•	•		•	•		•	•	•	•	•	•	•	•	•	•	•	•	•	•	•	•	•	•		•	•	•
XR552-12M	2,3	•	•		•	•		•	•	•	•	•	•	•	•	•	•	•	•	•	•	•	•	•	•		•	•	•
W-700																													
W786-2 SFP										•			•							•	•	•							
SC-600																													
SC622-2C				•			•			•	•	•	•	•	•	•	•	•	•	•	•	•							
SC626-2C				•			•			•	•	•	•	•	•	•	•	•	•	•	•	•							
SC632-2C		•	•	•	•	•	•	•	•	•	•	•	•	•	•	•	•	•	•	•	•	•							
SC636-2C		•	•	•	•	•	•	•	•	•	•	•	•	•	•	•	•	•	•	•	•	•							
SC642-2C		•	•	•	•	•	•	•	•	•	•	•	•	•	•	•	•	•	•	•	•	•							
SC646-2C		•	•	•	•	•	•	•	•	•	•	•	•	•	•	•	•	•	•	•	•	•							
M800000																													
M80000																							•	•					

• apply 1) For XR324-xxM when using the SFP media modules 2) The SFP991 (100MBit) cannot be inserted into the SFP+slots (1GBit/10GBit) 3) SFP993 (10GBit) can only be inserted in SFP+ slot

SCALANCE

G_IK10_XX_10481

Enlarge image

Overview of supported SFP plug-in transceivers for SCALANCE network components

© Siemens AG 2024

Selection and ordering data

	Article No.
SFP plug-in transceivers together with the MM992-2SFP media module in the modular SCALANCE X-300 Industrial Ethernet switches	
With 1 × 100 Mbps LC port, optical	
• SFP991-1 multimode, glass, up to 5 km	6GK5991-1AD00-8AA0
• SFP991-1 multimode, glass, up to 5 km, conformal coating	6GK5991-1AD00-8FA0
• SFP991-1A multimode, glass, up to 5 km	6GK5991-1AD00-8GA0
• SFP991-1LD single-mode, glass, up to 26 km	6GK5991-1AF00-8AA0
• SFP991-1LD single-mode, glass, up to 26 km, conformal coating	6GK5991-1AF00-8FA0
• SFP991-1LD A single-mode, glass, up to 26 km	6GK5991-1AF00-8GA0
• SFP991-1LH+ single-mode, glass, up to 70 km	6GK5991-1AE00-8AA0
• SFP991-1ELH200 single-mode, glass, up to 200 km	6GK5991-1AE30-8AA0
With 10 × 1 × 100 Mbps LC port, optical	
• SFP991-1 multimode, glass, up to 5 km	6GK5991-1AD00-8AC0
• SFP991-1LD single-mode, glass, up to 26 km	6GK5991-1AF00-8AC0
With 1 × 1000 Mbps LC port, optical	
• SFP992-1 multimode, glass, up to 750 m	6GK5992-1AL00-8AA0
• SFP992-1 multimode, glass, up to 750 m, conformal coating	6GK5992-1AL00-8FA0
• SFP992-1BXMR, multimode, glass, up to 500 m, bidirectional	6GK5992-1AL00-8RA0
• SFP992-1BXMT, multimode, glass, up to 500 m, bidirectional	6GK5992-1AL00-8TA0
• SFP992-1+ multimode, glass, up to 2 km	6GK5992-1AG00-8AA0
• SFP992-1LD single-mode, glass, up to 10 km	6GK5992-1AM00-8AA0
• SFP992-1LD single-mode, glass, up to 10 km, conformal coating	6GK5992-1AM00-8FA0
• SFP992-1BX10R, single-mode, glass, up to 10 km, bidirectional	6GK5992-1AM00-8RA0
• SFP992-1BX10T, single-mode, glass, up to 10 km, bidirectional	6GK5992-1AM00-8TA0
• SFP992-1LD+, single-mode, glass, up to 30 km	6GK5992-1AM30-8AA0
• SFP992-1LH single-mode, glass, up to 40 km	6GK5992-1AN00-8AA0
• SFP992-1LH+ single-mode, glass, up to 70 km	6GK5992-1AP00-8AA0
• SFP992-1ELH single-mode, glass, up to 120 km	6GK5992-1AQ00-8AA0

Selection and ordering data (continued)

	Article No.
With 10 × 1 × 1000 Mbps LC port, optical	
• SFP992-1 multimode, glass, up to 750 m	6GK5992-1AL00-8AC0
• SFP992-1LD single-mode, glass, up to 10 km	6GK5992-1AM00-8AC0
With 1 × 10000 Mbps LC port, optical	
• SFP993-1 multimode, glass, up to 550 m	6GK5993-1AT00-8AA0
• SFP993-1LD single-mode, glass, up to 10 km	6GK5993-1AU00-8AA0
• SFP993-1LH single-mode, glass, up to 40 km	6GK5993-1AV00-8AA0
IE connecting cable SFP+/SFP+, electrical, 10 Gbps	
Twinax copper cables, length	
• 1 m	6GK5980-3CB00-0AA1
• 2 m	6GK5980-3CB00-0AA2
• 7 m	6GK5980-3CB00-0AA7

Accessories

	Article No.
LC plug MM [2]	6GK1901-0RB10-2AB0
FO standard cable GP 50/125/1400 [1] [2] Multimode cable, sold by the meter; max. delivery unit 1000 m; minimum order quantity 20 m	6XV1873-2A
Preassembled FO patch cables ***Multimode***	
MM FO cord SC/LC With one SC duplex connector and one LC duplex connector, 1 m	6XV1843-5EH10-0CA0
SM FO cord SC/LC With one SC duplex connector and one LC duplex connector, 1 m	6XV1843-5FH10-0CA0

[1] Special fiber-optic cables, lengths and accessories available on request
[2] Special tools and trained personnel are required for preassembling glass fiber-optic cables

© Siemens AG 2024

Technical specifications

Article number product type designation	6GK5992-1AL00-8AA0 SFP992-1	6GK5992-1AL00-8FA0	6GK5992-1AG00-8AA0 SFP992-1+
interfaces			
number of electrical/optical connections for network components or terminal equipment maximum	1	1	1
number of optical interfaces for network components or terminal equipment maximum	1	1	1
number of 1000 Mbit/s LC ports for multimode integrated	1	1	1
design of the optical interface for network components or terminal equipment	LC	LC	LC
wavelength of the optical interface	850 nm; Multi-mode	850 nm; Multi-mode	1 310 nm; Multi-mode
connectable optical power relative to 1 mW			
• of the transmitter output minimum	-9.5 dB	-9.5 dB	-9 dB
• of the transmitter output maximum	-2.5 dB	-2.5 dB	-1 dB
• of the receiver input maximum	-3 dB	-3 dB	-1 dB
optical sensitivity relating to 1 mW of the receiver input minimum	-17 dB	-17 dB	-19 dB
attenuation factor of the FOC transmission link minimum necessary	0 dB	0 dB	0 dB
range at the optical interface depending on the optical fiber used	0.35 ... 0.75 km	0.35 ... 0.75 km	1 ... 2 km
transmission method for connection type 1	1000BASE-SX	1000BASE-SX	1000BASE-LSX
ambient conditions			
ambient temperature			
• during operation	-40 ... +85 °C	-40 ... +85 °C	-40 ... +85 °C
• during storage	-40 ... +85 °C	-40 ... +85 °C	-40 ... +85 °C
• during transport	-40 ... +85 °C	-40 ... +85 °C	-40 ... +85 °C
• note	A maximum operating temperature of +85 °C is permissible for a duration of 16 hours	A maximum operating temperature of +85 °C is permissible for a duration of 16 hours	A maximum operating temperature of +85 °C is permissible for a duration of 16 hours
relative humidity at 25 °C without condensation during operation maximum	95 %	95 %	95 %
protection class IP	IP20	IP20	IP20
design, dimensions and weights			
design	SFP Module	SFP Module	Plug-in transceiver
width	14 mm	14 mm	14 mm
height	9 mm	9 mm	9 mm
depth	57 mm	57 mm	57 mm
net weight	0.02 kg	0.02 kg	0.02 kg
fastening method	latched	latched	latched
standards, specifications, approvals			
standard			
• for FM	FM3611: Class 1, Divison 2, Group A, B, C, D / T4, Class 1, Zone 2, Group IIC, T4		FM3611: Class 1, Divison 2, Group A, B, C, D / T4, Class 1, Zone 2, Group IIC, T4
• for hazardous zone	EN 60079-0: 2006, EN60079-15: 2005, II 3 G Ex nA II T4, KEMA 07 ATEX 0145 X	EN 60079-0: 2006, EN60079-15: 2005, II 3 G Ex nA II T4, KEMA 07 ATEX 0145 X	EN 60079-0: 2006, EN60079-15: 2005, II 3 G Ex nA II T4, KEMA 07 ATEX 0145 X
• for safety from CSA and UL	UL 60950-1, CSA C22.2 No. 60950-1-03	UL 60950-1, CSA C22.2 No. 60950-1-03	UL 60950-1, CSA C22.2 No. 60950-1-03
• for emitted interference	EN 61000-6-4:2007 (Class A)	EN 61000-6-4:2007 (Class A)	EN 61000-6-4:2007 (Class A)
• for interference immunity	EN 61000-6-2:2005	EN 61000-6-2:2005	EN 61000-6-2:2005
certificate of suitability	EN 61000-6-2:2005, EN 61000-6-4:2007	EN 61000-6-2:2005, EN 61000-6-4:2007	EN 61000-6-2:2005, EN 61000-6-4:2007
• CE marking	Yes	Yes	Yes
• C-Tick	Yes	Yes	Yes
• KC approval	No	No	No
• CCC for hazardous zone according to GB standard	Yes; GB3836.1, GB3836.8		Yes; GB3836.1, GB3836.8

© Siemens AG 2024

Technical specifications (continued)

Article number product type designation	6GK5992-1AL00-8AA0 SFP992-1	6GK5992-1AL00-8FA0	6GK5992-1AG00-8AA0 SFP992-1+
• CCC for hazardous zone according to GB standard as marking	Ex nA IIC T4 Gc		Ex nA IIC T4 Gc
Marine classification association			
• French marine classification society (BV)	Yes		
MTBF	670 a	670 a	
further information internet links			
internet link			
• to web page: SiePortal	https://sieportal.siemens.com/	https://sieportal.siemens.com/	https://sieportal.siemens.com/
• to website: Image database	https://www.automation.siemens.com/bilddb	https://www.automation.siemens.com/bilddb	https://www.automation.siemens.com/bilddb
• to website: CAx-Download-Manager	http://www.siemens.com/cax	http://www.siemens.com/cax	http://www.siemens.com/cax
• to website: Industry Online Support	https://support.industry.siemens.com	https://support.industry.siemens.com	https://support.industry.siemens.com
security information			
security information	Siemens provides products and solutions with industrial cybersecurity functions that support the secure operation of plants, systems, machines and networks. In order to protect plants, systems, machines and networks against cyber threats, it is necessary to implement – and continuously maintain – a holistic, state-of-the-art industrial cybersecurity concept. Siemens' products and solutions constitute one element of such a concept. Customers are responsible for preventing unauthorized access to their plants, systems, machines and networks. Such systems, machines and components should only be connected to an enterprise network or the internet if and to the extent such a connection is necessary and only when appropriate security measures (e.g. firewalls and/or network segmentation) are in place. For additional information on industrial cybersecurity measures that may be implemented, please visit www.siemens.com/cybersecurity-industry. Siemens' products and solutions undergo continuous development to make them more secure. Siemens strongly recommends that product updates are applied as soon as they are available and that the latest product versions are used. Use of product versions that are no longer supported, and failure to apply the latest updates may increase customer's exposure to cyber threats. To stay informed about product updates, subscribe to the Siemens Industrial Cybersecurity RSS Feed under https://www.siemens.com/cert. (V4.7)	Siemens provides products and solutions with industrial cybersecurity functions that support the secure operation of plants, systems, machines and networks. In order to protect plants, systems, machines and networks against cyber threats, it is necessary to implement – and continuously maintain – a holistic, state-of-the-art industrial cybersecurity concept. Siemens' products and solutions constitute one element of such a concept. Customers are responsible for preventing unauthorized access to their plants, systems, machines and networks. Such systems, machines and components should only be connected to an enterprise network or the internet if and to the extent such a connection is necessary and only when appropriate security measures (e.g. firewalls and/or network segmentation) are in place. For additional information on industrial cybersecurity measures that may be implemented, please visit www.siemens.com/cybersecurity-industry. Siemens' products and solutions undergo continuous development to make them more secure. Siemens strongly recommends that product updates are applied as soon as they are available and that the latest product versions are used. Use of product versions that are no longer supported, and failure to apply the latest updates may increase customer's exposure to cyber threats. To stay informed about product updates, subscribe to the Siemens Industrial Cybersecurity RSS Feed under https://www.siemens.com/cert. (V4.7)	Siemens provides products and solutions with industrial cybersecurity functions that support the secure operation of plants, systems, machines and networks. In order to protect plants, systems, machines and networks against cyber threats, it is necessary to implement – and continuously maintain – a holistic, state-of-the-art industrial cybersecurity concept. Siemens' products and solutions constitute one element of such a concept. Customers are responsible for preventing unauthorized access to their plants, systems, machines and networks. Such systems, machines and components should only be connected to an enterprise network or the internet if and to the extent such a connection is necessary and only when appropriate security measures (e.g. firewalls and/or network segmentation) are in place. For additional information on industrial cybersecurity measures that may be implemented, please visit www.siemens.com/cybersecurity-industry. Siemens' products and solutions undergo continuous development to make them more secure. Siemens strongly recommends that product updates are applied as soon as they are available and that the latest product versions are used. Use of product versions that are no longer supported, and failure to apply the latest updates may increase customer's exposure to cyber threats. To stay informed about product updates, subscribe to the Siemens Industrial Cybersecurity RSS Feed under https://www.siemens.com/cert. (V4.7)

© Siemens AG 2024

Technical specifications (continued)

Article number product type designation	6GK5991-1AD00-8FA0	6GK5991-1AF00-8FA0	6GK5991-1AD00-8GA0 SFP991-1A	6GK5991-1AF00-8GA0 SFP991-1LD A
interfaces				
number of electrical/optical connections for network components or terminal equipment maximum	1	1	1	1
number of optical interfaces for network components or terminal equipment maximum	1	1	1	1
number of 100 Mbit/s LC ports	1	1	1	1
design of the optical interface for network components or terminal equipment	LC	LC	LC	LC
wavelength of the optical interface	1 300 nm; Multi-mode	1 310 nm; Single-mode	1 310 nm; Multi-mode	1 310 nm; Single-mode
connectable optical power relative to 1 mW				
• of the transmitter output minimum	-24 dB	-15 dB	-23.5 dB	-15 dB
• of the transmitter output maximum	-14 dB	-8 dB	-14 dB	-8 dB
• of the receiver input maximum	-12 dB	-8 dB	-8 dB	-8 dB
optical sensitivity relating to 1 mW of the receiver input minimum	-31 dB	-28 dB	-31 dB	-31 dB
attenuation factor of the FOC transmission link minimum necessary	0 dB	0 dB	0 dB	0 dB
range at the optical interface depending on the optical fiber used	0 ... 5 km	0 ... 26 km	0 ... 5 km	0 ... 26 km
transmission method for connection type 1	100BASE-FX	100BASE-LX	100BASE-FX	100BASE-LX
ambient conditions				
ambient temperature				
• during operation	-40 ... +85 °C	-40 ... +85 °C	-40 ... +95 °C	-40 ... +95 °C
• during storage	-40 ... +85 °C	-40 ... +85 °C	-40 ... +95 °C	-40 ... +95 °C
• during transport	-40 ... +85 °C	-40 ... +85 °C	-40 ... +95 °C	-40 ... +95 °C
• note	A maximum operating temperature of +85 °C is permissible for a duration of 16 hours	A maximum operating temperature of +85 °C is permissible for a duration of 16 hours	A maximum operating temperature of +95 °C is permissible for a duration of 16 hours.	A maximum operating temperature of +95 °C is permissible for a duration of 16 hours.
relative humidity at 25 °C without condensation during operation maximum	95 %	95 %	95 %	95 %
protection class IP	IP20	IP20	IP20	IP20
design, dimensions and weights				
design	SFP Module	SFP Module	SFP Module	SFP Module
width	14 mm	14 mm	14 mm	14 mm
height	9 mm	9 mm	9 mm	9 mm
depth	57 mm	57 mm	57 mm	57 mm
net weight	0.01 kg	0.01 kg	0.01 kg	0.01 kg
product feature conformal coating	Yes			
fastening method	latched	latched	latched	latched
standards, specifications, approvals				
standard				
• for FM	FM3611: Class 1, Divison 2, Group A, B, C, D / T4, Class 1, Zone 2, Group IIC, T4	FM3611: Class 1, Divison 2, Group A, B, C, D / T4, Class 1, Zone 2, Group IIC, T4		
• for hazardous zone	EN 60079-0: 2006, EN60079-15: 2005, II 3 G Ex nA II T4, KEMA 07 ATEX 0145 X	EN 60079-0: 2006, EN60079-15: 2005, II 3 G Ex nA II T4, KEMA 07 ATEX 0145 X	EN 60079-0: 2006, EN60079-15: 2005, II 3 G Ex nA II T4, KEMA 07 ATEX 0145 X	EN 60079-0: 2006, EN60079-15: 2005, II 3 G Ex nA II T4, KEMA 07 ATEX 0145 X
• for safety from CSA and UL	UL 60950-1, CSA C22.2 No. 60950-1-03	UL 60950-1, CSA C22.2 No. 60950-1-03	UL 60950-1, CSA C22.2 No. 60950-1-03	UL 60950-1, CSA C22.2 No. 60950-1-03
• for emitted interference	EN 61000-6-4:2007 (Class A)	EN 61000-6-4:2007 (Class A)	EN 61000-6-4:2007 (Class A)	EN 61000-6-4:2007 (Class A)

© Siemens AG 2024

Technical specifications (continued)

Article number product type designation	6GK5991-1AD00-8FA0	6GK5991-1AF00-8FA0	6GK5991-1AD00-8GA0 SFP991-1A	6GK5991-1AF00-8GA0 SFP991-1LD A
• for interference immunity	EN 61000-6-2:2005	EN 61000-6-2:2005	EN 61000-6-2:2005	EN 61000-6-2:2005
certificate of suitability	EN 61000-6-2:2005, EN 61000-6-4:2007	EN 61000-6-2:2005, EN 61000-6-4:2007	EN 61000-6-2:2005, EN 61000-6-4:2007	EN 61000-6-2:2005, EN 61000-6-4:2007
• CE marking	Yes	Yes	Yes	Yes
• C-Tick	Yes	Yes	Yes	Yes
• KC approval	No	No	No	No
• CCC for hazardous zone according to GB standard	Yes; GB3836.1, GB3836.8	Yes; GB3836.1, GB3836.8		
• CCC for hazardous zone according to GB standard as marking	Ex nA IIC T4 Gc	Ex nA IIC T4 Gc		
MTBF	490 a	490 a	345 a	370 a
further information internet links				
internet link				
• to web page: SiePortal	https://sie-portal.siemens.com/	https://sie-portal.siemens.com/	https://sie-portal.siemens.com/	https://sie-portal.siemens.com/
• to website: Image database	https://www.automation.siemens.com/bilddb	https://www.automation.siemens.com/bilddb	https://www.automation.siemens.com/bilddb	https://www.automation.siemens.com/bilddb
• to website: CAx-Download-Manager	http://www.siemens.com/cax	http://www.siemens.com/cax	http://www.siemens.com/cax	http://www.siemens.com/cax
• to website: Industry Online Support	https://support.industry.siemens.com	https://support.industry.siemens.com	https://support.industry.siemens.com	https://support.industry.siemens.com
security information				
security information	Siemens provides products and solutions with industrial cybersecurity functions that support the secure operation of plants, systems, machines and networks. In order to protect plants, systems, machines and networks against cyber threats, it is necessary to implement – and continuously maintain – a holistic, state-of-the-art industrial cybersecurity concept. Siemens' products and solutions constitute one element of such a concept. Customers are responsible for preventing unauthorized access to their plants, systems, machines and networks. Such systems, machines and components should only be connected to an enterprise network or the internet if and to the extent such a connection is necessary and only when appropriate security measures (e.g. firewalls and/or network segmentation) are in place. For additional information on industrial cybersecurity measures that may be implemented, please visit www.siemens.com/cybersecurity-industry. Siemens' products and solutions undergo continuous development to make them more secure. Siemens strongly recommends that product updates are applied as soon as they are available and that the latest product versions are used. Use of product versions that are no longer supported, and fail-	Siemens provides products and solutions with industrial cybersecurity functions that support the secure operation of plants, systems, machines and networks. In order to protect plants, systems, machines and networks against cyber threats, it is necessary to implement – and continuously maintain – a holistic, state-of-the-art industrial cybersecurity concept. Siemens' products and solutions constitute one element of such a concept. Customers are responsible for preventing unauthorized access to their plants, systems, machines and networks. Such systems, machines and components should only be connected to an enterprise network or the internet if and to the extent such a connection is necessary and only when appropriate security measures (e.g. firewalls and/or network segmentation) are in place. For additional information on industrial cybersecurity measures that may be implemented, please visit www.siemens.com/cybersecurity-industry. Siemens' products and solutions undergo continuous development to make them more secure. Siemens strongly recommends that product updates are applied as soon as they are available and that the latest product versions are used. Use of product versions that are no longer supported, and fail-	Siemens provides products and solutions with industrial cybersecurity functions that support the secure operation of plants, systems, machines and networks. In order to protect plants, systems, machines and networks against cyber threats, it is necessary to implement – and continuously maintain – a holistic, state-of-the-art industrial cybersecurity concept. Siemens' products and solutions constitute one element of such a concept. Customers are responsible for preventing unauthorized access to their plants, systems, machines and networks. Such systems, machines and components should only be connected to an enterprise network or the internet if and to the extent such a connection is necessary and only when appropriate security measures (e.g. firewalls and/or network segmentation) are in place. For additional information on industrial cybersecurity measures that may be implemented, please visit www.siemens.com/cybersecurity-industry. Siemens' products and solutions undergo continuous development to make them more secure. Siemens strongly recommends that product updates are applied as soon as they are available and that the latest product versions are used. Use of product versions that are no longer supported, and fail-	Siemens provides products and solutions with industrial cybersecurity functions that support the secure operation of plants, systems, machines and networks. In order to protect plants, systems, machines and networks against cyber threats, it is necessary to implement – and continuously maintain – a holistic, state-of-the-art industrial cybersecurity concept. Siemens' products and solutions constitute one element of such a concept. Customers are responsible for preventing unauthorized access to their plants, systems, machines and networks. Such systems, machines and components should only be connected to an enterprise network or the internet if and to the extent such a connection is necessary and only when appropriate security measures (e.g. firewalls and/or network segmentation) are in place. For additional information on industrial cybersecurity measures that may be implemented, please visit www.siemens.com/cybersecurity-industry. Siemens' products and solutions undergo continuous development to make them more secure. Siemens strongly recommends that product updates are applied as soon as they are available and that the latest product versions are used. Use of product versions that are no longer supported, and fail-

© Siemens AG 2024

Technical specifications (continued)

Article number product type designation	6GK5991-1AD00-8FA0	6GK5991-1AF00-8FA0	6GK5991-1AD00-8GA0 SFP991-1A	6GK5991-1AF00-8GA0 SFP991-1LD A
	ure to apply the latest updates may increase customer's exposure to cyber threats. To stay informed about product updates, subscribe to the Siemens Industrial Cybersecurity RSS Feed under https://www.siemens.com/cert. (V4.7)	ure to apply the latest updates may increase customer's exposure to cyber threats. To stay informed about product updates, subscribe to the Siemens Industrial Cybersecurity RSS Feed under https://www.siemens.com/cert. (V4.7)	ure to apply the latest updates may increase customer's exposure to cyber threats. To stay informed about product updates, subscribe to the Siemens Industrial Cybersecurity RSS Feed under https://www.siemens.com/cert. (V4.7)	ure to apply the latest updates may increase customer's exposure to cyber threats. To stay informed about product updates, subscribe to the Siemens Industrial Cybersecurity RSS Feed under https://www.siemens.com/cert. (V4.7)

More information

Selection Tool:

To support the selection of SCALANCE network components, the TIA Selection Tool is available at:

www.siemens.com/tst

© Siemens AG 2024

Overview

- FastConnect
- ITP cables and connectors
- Fiber-optic cable

© Siemens AG 2024

Overview

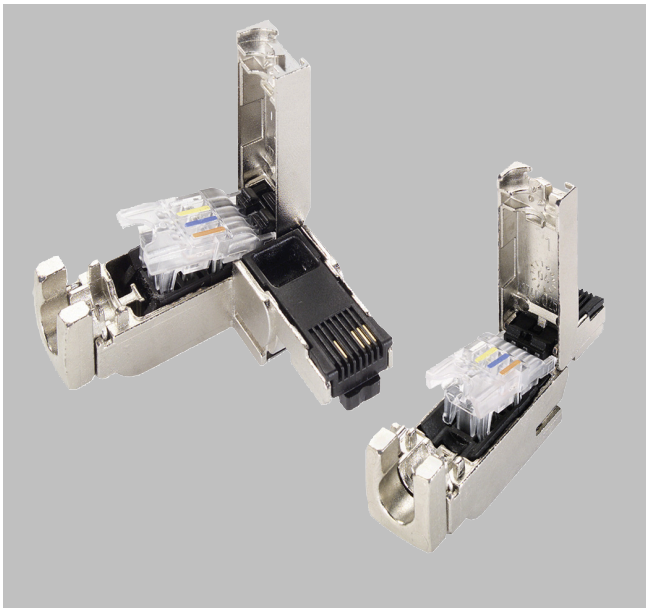

Industrial Ethernet FastConnect RJ45 plugs

Industrial Ethernet FastConnect (IE FC) is a rapid assembly system with insulation displacement for easy assembly and wiring of 4-wire and 8-wire IE FC cables. Using the FC stripping tool, it is possible to remove the outer casing and woven shield of the IE FC cable accurately in a single step. The cable prepared in this manner is subsequently assembled on the cut/crimp contacts of the connection element.

© Siemens AG 2024

Application

Linking elements

The linking elements which can be used depend on whether the transmission rate is 10/100 Mbps or 1 000 Mbps:

- IE FC RJ45 plug 2×2 90/180 (10/100 Mbps) in association with 4-wire (2×2) IE FC cables
- IE FC RJ45 plug 4×2 180 (10/100/1 000 Mbps) in association with 8-wire (4×2) IE FC cables
- IE FC outlet RJ45 (10/100 Mbps) in association with 4-wire (2x2) IE FC cables
- IE FC RJ45 modular outlet (10/100/1 000 Mbps) with 8-wire (4x2) IE FC cables

The following table provides an overview of the electric port types of the switches, the transmission rates they support, and the IE FC TP standard cables and IE FC connecting elements which can be used. In addition to the IE FC TP standard cables, Catalog IK PI offers further IE FC TP cables with special properties.

Transmission rate	10/100 Mbps		1 000 Mbps	
Port type	10/100BaseTX		1000BaseTX	
Max. cable length	100 m	90 m (+ total of 10 m for TP cord patch cables)	90 m	90 m (+ total of 10 m for TP cord patch cables)
Cable type	IE FC TP standard cable 2×2	IE FC TP standard cable 4×2	IE FC TP standard cable 4×2 (AWG 24)	IE FC TP standard cable 4×2 (AWG 22)
Connecting elements	IE FC RJ45 plug 2×2 90/180, alternatively: IE FC outlet RJ45 + TP cord patch cable	IE FC RJ45 modular outlet with insert 2FE + TP cord patch cable	IE FC RJ45 plug 4×2 180	IE FC RJ45 modular outlet with insert 1GE + TP cord patch cable

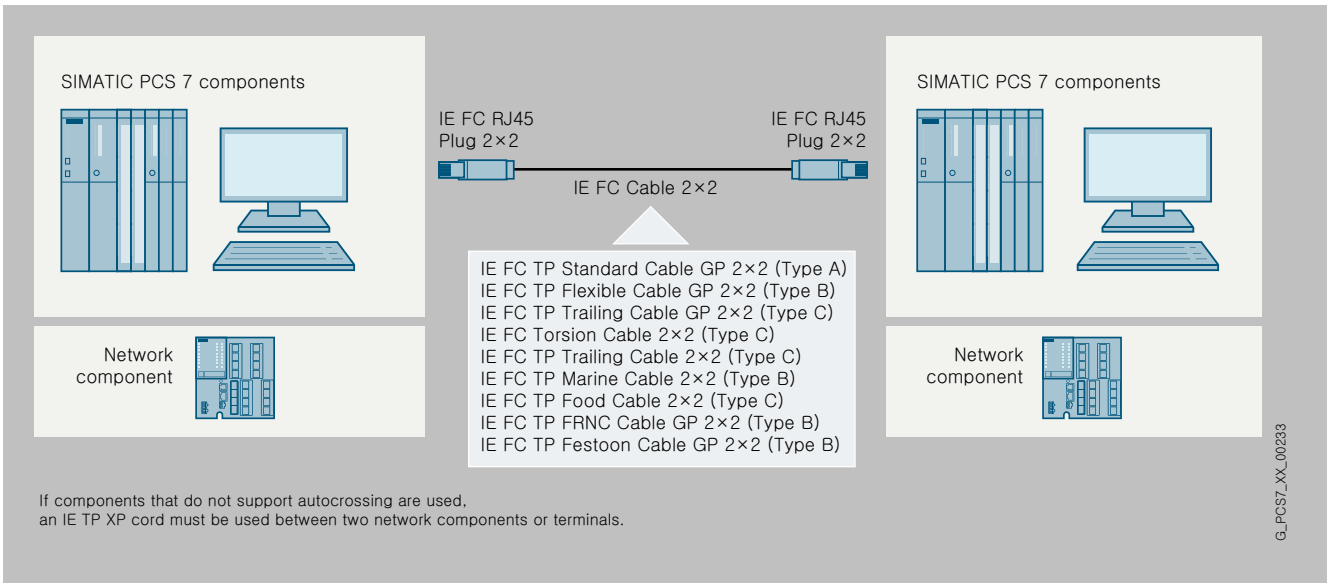

Use of FastConnect cables 2×2 with IE FC RJ45 plug 2×2

IE FC RJ45 plug 2×2

The IE FC RJ45 plugs 2×2 suitable for simple and fast on-site assembly of 4-wire (2×2) twisted pair (TP) FastConnect installation cables are the ideal solution for Industrial Ethernet communication connections for transmission rates up to 100 Mbps. They can be used to implement point-to-point connections without patch technology between two terminal devices/network components over distances of up to 100 m. Since the IE FC RJ45 plugs 2×2 have no parts which can be lost, assembly is also possible under difficult conditions. For alternatives to the IE FC TP standard cable according to the configuration graphics, see Catalog IK PI, section "Industrial Ethernet", subsection "Cabling systems".

© Siemens AG 2024

Application (continued)

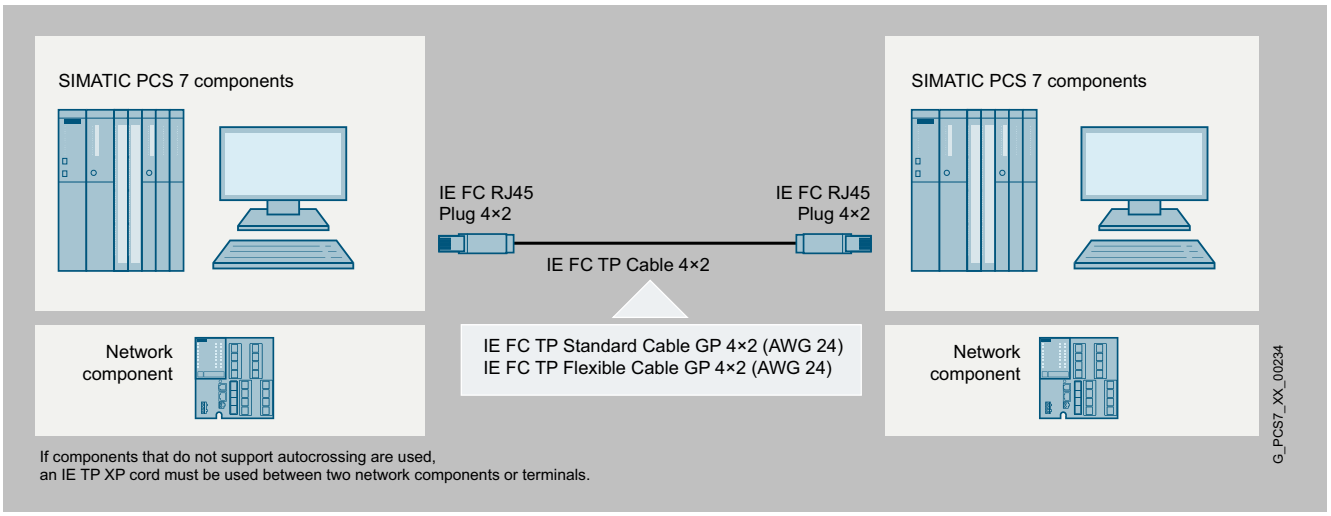

Use of FastConnect cables 4×2 with IE FC RJ45 plug 4×2

IE FC RJ45 plug 4×2

The compact, rugged design of the Cat6A plug connector enables the FC RJ45 plug to be used in both industrial and office environments.

The Industrial Ethernet FastConnect RJ45 plug 4×2 permits quick and easy installation of the Industrial Ethernet FastConnect installation cables 4×2 (8-wire twisted pair AWG24 cables) in the field.

The Industrial Ethernet FastConnect stripping tool for preparing the end of a cable (stripping the jacket and shield in one step) allows simple handling and swift, secure fitting of the connector to the cable. Since all connector parts are captive, it can also be fitted in difficult conditions.

The new plug connector allows the implementation of point-to-point connections (10/100/1 000 Mbps) for Industrial Ethernet between two terminal devices/network components up to 100 m apart without the need for patches (for details, see IK PI capital, "Industrial Ethernet", "Cabling systems").

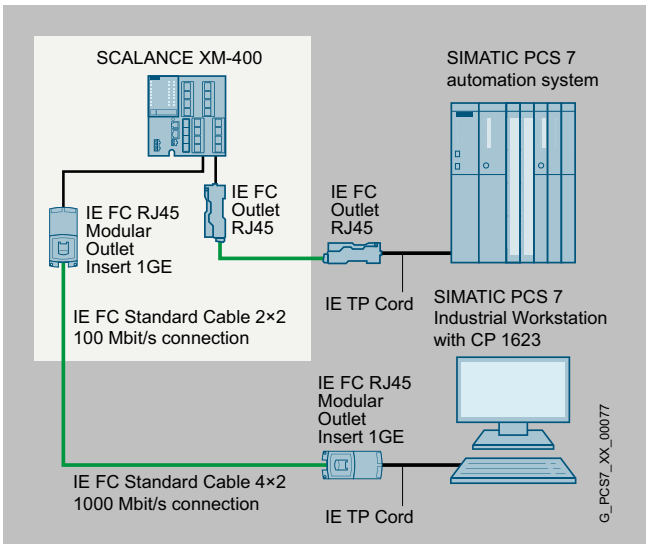

Configuration example with IE FC RJ45 modular outlet and IE FC outlet RJ45

IE FC outlet RJ45 and IE FC RJ45 modular outlet

Alternatives for conversion from RJ45 to the insulation displacement system:

- IE FC outlet RJ45 for 4-wire TP (2×2) IE FC cables and transmission rates up to 100 Mbps
- IE FC RJ45 modular outlet for 8-core TP (4×2) IE FC cables and transmission rates up to 1 000 Mbps.

The latter has the advantage that the existing wiring can still be used if communication is converted from 100 Mbps to 1 000 Mbps. It is only necessary to replace the 2FE insert by one of type 1GE. In contrast to the plugs, an RJ45 patch cable (TP cord) is also required for each outlet so that it can be connected to the network component or terminal device.

Detailed information on the FastConnect outlets and the available TP cords can be found in Catalog IK PI, in the Industry Mall or in CA 01 under "Industrial Communication".

Additional information on network structures is provided in the manual for TP and fiber-optic networks.

© Siemens AG 2024

Design

IE FC RJ45 plugs 4×2 and 2×2

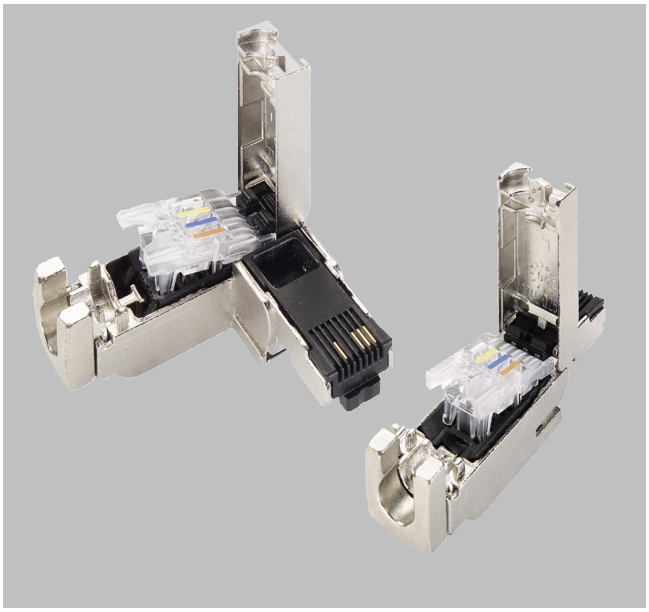

IE FC RJ45 plug 2×2 with 90° outgoing cable (left) and with 180° outgoing cable (right)

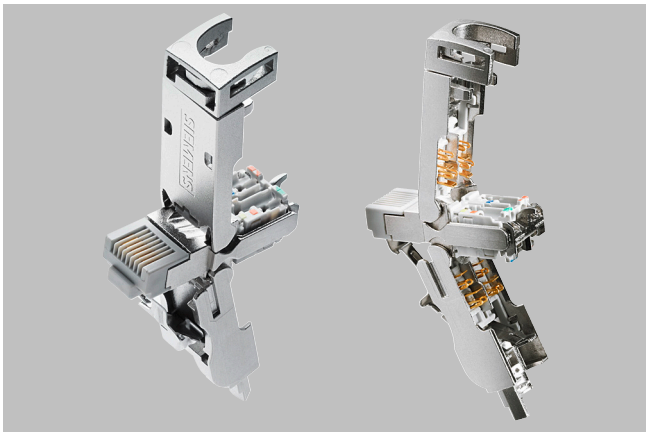

IE FC RJ45 plug 4×2 with 180° outgoing cable

In contrast to the IE FC RJ45 plug 4×2 which is only offered with a 180° (straight) outgoing cable, the IE FC RJ45 plug 2×2 is also available with a 90° (angled) outgoing cable.

All IE FC RJ45 plugs have a rugged, industry-compatible metal enclosure with integral strain relief that provides optimum protection for data communication against EMC interference. The integral insulation displacement contacts permit simple, fault-free contacting of the various types of FC cable. Following introduction of the stripped ends of the cables into the tipped-up barrel contacts, the latter are pressed down for secure contacting of the conductors.

With the housing open, colored marks on the contact cover identify correct connection of the cable cores. The transparent plastic material of the contact element allows visual inspection of the contacts.

Owing to their compact size, IE FC RJ45 plugs can be used both on devices with individual jacks and on devices with multiple jacks (blocks).

Design (continued)

Matching retaining collars on terminal equipment, e.g. on devices from the SCALANCE X and SCALANCE S families, permits additional protection of the plug connection against tension and bending stresses.

IE FC RJ modular outlet with insert 1GE

IE FC RJ45 modular outlet

The IE FC RJ45 Modular Outlet (Base Module) designed for transmission rates up to 1 000 Mbps consists of a rugged metal housing with IP40 degree of protection which is suitable for both DIN mounting rail and wall mounting. It has 8 barrel contacts for connecting 8-core Industrial Ethernet FC installation cables (AWG 22) and an interface for the replaceable insert, for example:

- IE FC RJ45 modular outlet insert 2FE with 2 × RJ45 sockets for 100 Mbps
- IE FC RJ45 modular outlet insert 1GE with 1 × RJ45 socket for 1 000 Mbps
- IE FC RJ45 modular outlet power insert with 1 × RJ45 socket for 100 Mbps and 1 × 24 V DC connection (for details on use and ordering, see Section "Industrial Wireless LAN")

© Siemens AG 2024

Selection and ordering data

Industrial Ethernet FC standard cable GP 2×2 For universal use, for connection to IE FC RJ45 outlet or IE FC RJ45, 4-wire (2×2), shielded	
• Sold by the meter; delivery unit max. 1 000 m; minimum order quantity 20 m	6XV1840-2AH10
• Preferred length 1 000 m	6XV1840-2AU10
Industrial Ethernet FC standard cable GP 4×2 8-wire, shielded TP installation cable for universal applications; with UL approval Sold by the meter; delivery unit max. 1 000 m, minimum order quantity 20 m	
• AWG 22 For connection to IE FC RJ45 modular outlet	6XV1870-2E
• AWG 24 For connection to IE FC RJ45 plug 4×2	6XV1878-2A
Industrial Ethernet FC TP robust standard cable GP 2×2 (PROFINET Type A) TPE protective jacket, fixed installation, for connection to IE FC RJ45 or IE FC RJ45 outlet, for universal use, 4-wire, shielded, Cat. 5e Sold by the meter, delivery unit max. 2 000 m; minimum order quantity 20 m	6XV1841-2A
Industrial Ethernet FC TP robust standard cable GP 2×2 (PROFINET Type B) TPE protective jacket, with flexible cores, for connection to IE FC RJ45 or IE FC RJ45 outlet, for universal use, 4-wire, shielded, Cat. 5e Sold by the meter, delivery unit max. 2 000 m; minimum order quantity 20 m	6XV1841-2B
Industrial Ethernet FC stripping tool Pre-adjusted stripping tool for fast stripping of Industrial Ethernet FC cables	6GK1901-1GA00
Industrial Ethernet FC blade cassettes Replacement blade cassette for the Industrial Ethernet stripping tool, 5 units; for use with IE FC RJ45 plugs and modular outlet	6GK1901-1GB00
IE FC RJ45 plug 2×2 180 RJ45 plug connector for Industrial Ethernet with a rugged metal enclosure and integrated insulation displacement contacts for connecting Industrial Ethernet FC installation cables; with 180° cable outlet; for network components and CPs/CPUs with Industrial Ethernet port	
• 1 pack = 1 unit	6GK1901-1BB10-2AA0
• 1 pack = 10 units	6GK1901-1BB10-2AB0
• 1 pack = 50 units	6GK1901-1BB10-2AE0

Selection and ordering data (continued)

Industrial Ethernet FC RJ45 plug 2×2 90 RJ45 plug connector for Industrial Ethernet with a rugged metal enclosure and integrated insulation displacement contacts for connecting Industrial Ethernet FC installation cables; with 90° cable outlet	
• 1 pack = 1 unit	6GK1901-1BB20-2AA0
• 1 pack = 10 units	6GK1901-1BB20-2AB0
• 1 pack = 50 units	6GK1901-1BB20-2AE0
Industrial Ethernet FC RJ45 plug 4×2 180 Industrial Ethernet FastConnect RJ45 plug 180 4×2, RJ45 connector; CAT6A; (10/100/1000/10000 Mbps) with rugged metal enclosure and FC connection technology, for IE FC cable 4×2 (AWG24); 180° cable outlet	
• 1 pack = 1 unit	6GK1901-1BB12-2AA0
• 1 pack = 10 units	6GK1901-1BB12-2AB0
• 1 pack = 50 units	6GK1901-1BB12-2AE0
Industrial Ethernet FC outlet RJ45	6GK1901-1FC00-0AA0
IE FC RJ45 modular outlet with insert 1GE FastConnect RJ45 outlet for Industrial Ethernet with a replaceable insert for 1 × 1 000 Mbps interface	6GK1901-1BE00-0AA2
IE FC RJ45 modular outlet with insert 2FE FastConnect RJ45 outlet for Industrial Ethernet with a replaceable insert for 2 × 100 Mbps interface For further IE FC RJ45 modular outlet variants and replaceable inserts, see Catalog IK PI	6GK1901-1BE00-0AA1

© Siemens AG 2024

Overview

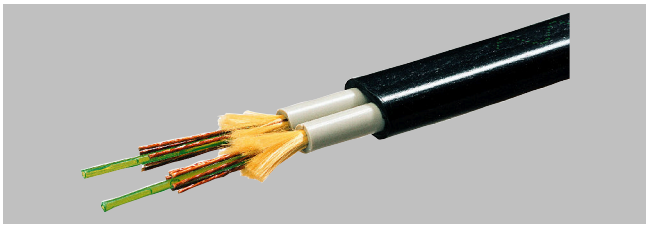

Optical transmission media

Glass fiber-optic cables are the preferred optical transmission medium. The two types of cable offered are suitable for above-ground routing indoors or outdoors. They are available in fixed lengths, pre-assembled with 2x2 BFOC connectors, 2x2 SC connectors or 2×2 LC connectors

The FO standard cable with 2 x 2 SC connectors is required for optical networking in the Gigabit range.

Note:

You can order supplementary components for the SIMATIC NET cabling range from your local contact. For technical advice contact:
Siemens AG
SPG Industrial Network and Components, Fürth, Germany
J. Hertlein
Tel.: +49 911 750-4465
E-mail: juergen.hertlein@siemens.com

Specifications, other cable lengths and other fiber-optic cables can be found in catalog IK PI.

More information on assembly is provided in the manual for TP and fiber-optic networks.

Selection tools

To assist in selecting the right Industrial Ethernet switches and with the configuration of modular variants, the SIMATIC NET Selection Tool and the TIA Selection Tool Cloud are available at:

http://www.siemens.com/snst-standalone

http://www.siemens.com/tstcloud

Selection and ordering data

FO standard cable 50/125[1] Preferred lengths, pre-assembled with 2x2 SC connectors:	
• 1 m	**6XV1873-6AH10**
• 3 m	**6XV1873-6AH30**
• 5 m	**6XV1873-6AH50**
• 10 m	**6XV1873-6AN10**
• 20 m	**6XV1873-6AN20**
• 50 m	**6XV1873-6AN50**
• 100 m	**6XV1873-6AT10**
• 200 m	**6XV1873-6AT20**
• 300 m	**6XV1873-6AT30**
FO standard cable 50/125[1] Preferred lengths, pre-assembled with 2 LC duplex connectors:	
• 1 m	**6XV1873-5AH10**
• 2 m	**6XV1873-5AH20**
• 3 m	**6XV1873-5AH30**
• 5 m	**6XV1873-5AH50**
• 10 m	**6XV1873-5AN10**
• 15 m	**6XV1873-5AN15**
• 20 m	**6XV1873-5AN20**
• 30 m	**6XV1873-5AN30**
• 40 m	**6XV1873-5AN40**
• 50 m	**6XV1873-5AN50**
• 80 m	**6XV1873-5AN80**
• 100 m	**6XV1873-5AT10**
• 150 m	**6XV1873-5AT15**
• 200 m	**6XV1873-5AT20**
• 300 m	**6XV1873-5AT30**
FIBER OPTIC CABLE standard cable 62.5/125, may be split[1] Preferred lengths, pre-assembled with 2x2 BFOC (ST) connectors:	
• 1 m	**6XV1820-5BH10**
• 3 m	**6XV1820-5BH30**
• 5 m	**6XV1820-5BH50**
• 10 m	**6XV1820-5BN10**
• 20 m	**6XV1820-5BN20**
• 50 m	**6XV1820-5BN50**
• 100 m	**6XV1820-5BT10**
• 200 m	**6XV1820-5BT20**
• 300 m	**6XV1820-5BT30**
BFOC (ST) connector set For FIBER OPTIC CABLE standard cable, 20 units	**6GK1901-0DA20-0AA0**

[1] Special tools and specially trained personnel are required for pre-assembling glass fiber-optic cables.

© Siemens AG 2024

More information

Various versions of the optical connections for fiber-optic cables are available with the network components or terminal equipment:

Design of optical connection	Description	
ST/BFOC connection = ST (stick and twist)	ST/BFOC connectors have a bayonet lock for glass fiber-optic cables. They are suitable for monomode and multimode fibers.	
SC connection	SC connectors are standard connectors for glass fiber-optic cables. The SC connector is usually in the duplex version. However, it can also be used as a simplex connector by separating it from the isolating piece.	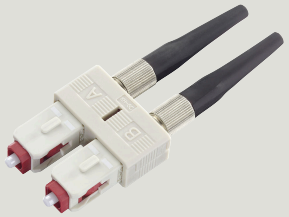
LC connection	FC FO LC PLUG for on site assembly on FC fiber-optic cables (62.5/200/230) (Duplex plugs + cleaning cloths)	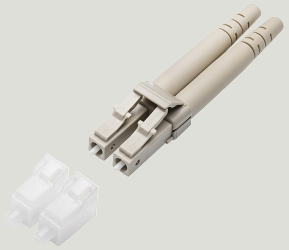
SC-RJ connection	SCRJ is the smallest SC duplex plug connection.	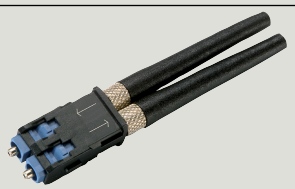

For more information and an overview of the connectors for connection of fiber-optic cables to the optical interface of network components and terminal equipment see the Industry Online Support:
https://support.industry.siemens.com/cs/ww/en/view/35146578

under
www.siemens.com/fastconnect

© Siemens AG 2024

Design

Connection of single stations, servers and clients

SIMATIC PCS 7 subsystems for engineering, operator control and monitoring (also via internet/Intranet), Batch Control, Route Control, Asset Management or IT applications are distributed between various SIMATIC PCS 7 Industrial Workstations of single station, server or client design depending on the configuration. Depending on their task and the associated integration into the overall plant, these SIMATIC PCS 7 Industrial Workstations are connected either on the plant bus only, the terminal bus only or on both buses of the Industrial Ethernet network. The connection can be redundant or non-redundant, and is made using:

- Interface modules integrated onboard
- Simple network cards
- Special communications modules, e.g. CP 1623

Connection to plant bus

A SIMATIC PCS 7 workstation, designed as single station or server, can be operated on the Industrial Ethernet plant bus with an Ethernet network card (10/100/1000 Mbps) and BCE license or with a CP 1623 communications module and SIMATIC NET HARDNET-IE S7 or SIMATIC NET HARDNET-IE S7-REDCONNECT communication software.

The IE variants of the SIMATIC PCS 7 Industrial Workstation for single stations and servers are factory equipped with a CP 1623 communications module and SIMATIC NET HARDNET-IE S7 communication software, licensed for up to four CP 1623 (4x license).

CP 1623 has a PCI Express port x1 as well as a 2-port switch (RJ45) for connecting to Industrial Ethernet (10/100/1000 Mbps).

An Ethernet card (10/100/1000 Mbps) with a BCE license is integrated in the BCE variants of the SIMATIC PCS 7 Industrial Workstation. A separately available desktop adapter network card can also be used with this BCE license in a SIMATIC PCS 7 Industrial Workstation.

If you use alternative hardware instead of the SIMATIC PCS 7 Industrial Workstation, you require an additional BCE license for each station which communicates over the plant bus via BCE (Basic Communication Ethernet).

With BCE, AS communication is possible with up to 8 automation systems, with SIMATIC NET HARDNET-IE S7 communication via CP 1623 with up to 64 automation systems (only AS single stations in each case, no AS redundancy stations).

Only the SIMATIC PCS 7 workstation with CP 1623 can communicate with redundant automation systems (redundancy stations). You require for this purpose SIMATIC NET HARDNET-IE S7-REDCONNECT (4x license) communication software instead of the SIMATIC NET HARDNET-IE S7 communication software. SIMATIC NET HARDNET-IE S7-REDCONNECT PowerPack (4x license) can be used to upgrade the communication software.

Single stations and servers with BCE can be retro-upgraded to CP 1623/1628 communication. Depending on the criteria mentioned above, this requires SIMATIC NET HARDNET-IE S7 or SIMATIC NET HARDNET-IE S7-REDCONNECT in addition to the CP 1623 communications module.

The communication software for CP 1623 is always supplied with the SIMATIC PCS 7 software and is installed in line with the operating system.

In order to activate this communication software, you may need additional licenses for the SIMATIC NET HARDNET-IE S7, SIMATIC NET HARDNET-IE S7-REDCONNECT, or SIMATIC NET HARDNET-IE S7-REDCONNECT PowerPack communication products.

Connection to terminal bus

SIMATIC PCS 7 Industrial Workstations in client, server or single station configurations are usually connected to the terminal bus via the onboard Industrial Ethernet interface modules. In the case of servers

Design (continued)

or single stations without a connection to the plant bus, the network card envisaged for BCE can be used as an alternative.

The terminal bus can also be configured redundantly. A configuration with two separate rings is recommended for the redundant, high-availability terminal bus. The communication is performed in this case using the Parallel Redundancy Protocol (PRP) in accordance with IEC 62439-3. Each PCS 7 station should be connected to one of two Industrial Ethernet interface modules on each of the two separate rings. Industrial Ethernet interface modules are standard in all current SIMATIC PCS 7 Industrial Workstations.

The SIMATIC NET SOFTNET-IE RNA communication software on the redundantly connected PCS 7 stations organizes communication processes based on the PRP. Therefore, SIMATIC NET SOFTNET-IE RNA communication software is required on each of the redundantly connected PCS 7 stations.

Connecting non-PRP-enabled devices

Up to 2 non-PRP-enabled devices that have only one Industrial Ethernet port, WLAN access point or infrastructure computer, such as DNS, WINS, DHCP or file server, can be integrated into a redundant, high-availability terminal bus with PRP via a SCALANCE X204RNA.

SCALANCE X204RNA is available in two product variants:

- SCALANCE X204RNA

  Network access point in plastic enclosure with 4 electrical ports for connecting up to 2 non-PRP-enabled devices to redundant networks

- SCALANCE X204RNA EEC

  Network access point in metal enclosure with 2 electric terminal device ports and 2 optical/electrical combo ports for network connection of up to 2 non-PRP-enabled terminal devices to redundant networks

The following constraints must be observed:

- Length of the TP cable between the network and SCALANCE X-200RNA:
  - Max. 100 m with IE FC cable and IE FC RJ45 plug 180
  - Max. 10 m using patches with TP cord
- Length of the optical cables between the network and SCALANCE X-200RNA:
  - Max. 5 000 m with Industrial Ethernet glass fiber-optic cables (multimode)
  - Max. 26 000 m with Industrial Ethernet glass fiber-optic cables (single-mode)

SCALANCE X-200RNA is typically installed with the stations to be connected in a control cabinet.

For more information and technical specifications for the SCALANCE X204RNA, see Catalog IK PI.

Connection of automation systems

The SIMATIC PCS 7 automation systems communicate with other subsystems of the process control system (e.g. Operator System or engineering system) via the Industrial Ethernet plant bus. The automation systems are connected to the plant bus using the CP 443-1 communications module, also redundantly in the case of high-availability systems. Instead of the CP 4431, CP 4431 Advanced with integrated security function (firewall and VPN) can also be used.

With the AS 410 modular automation systems, an additional layer is applied to the PCB of CPU 410-5H Process Automation (conformal coating). To match the AS 410, a CP 443-1 in the conformal coating version is therefore preferred (component of the AS bundle configuration).

© Siemens AG 2024

Selection and ordering data

System connection of single stations, servers and clients	
Desktop adapter network adapter for BCE and as spare part for redundant terminal bus Intel network adapter for connection to Industrial Ethernet (10/100/1000 Mbps), with RJ45 connection and PCI express interface	A5E02639550
CP 1623 PCI Express x1 card for connection to Industrial Ethernet (10/100/1000 Mbps), with 2-port switch (RJ45)	6GK1162-3AA00
Licenses may be required for activating the functionality of the CP 1623 (communications software is part of the SIMATIC PCS 7 software) ***Activation license if no redundant AS are used***	
SIMATIC NET HARDNET-IE S7 V16 Software for S7, open communication, OPC, PG/OP communication Configuration software; up to 120 connections; floating license Runtime software, software and electronic manual on DVD; license key, 2 languages (English, German) for Windows 7 SP1, 64-bit (Professional / Enterprise / Ultimate) Windows 10 Pro / Enterprise, Version 1809 Windows 10 Pro / Enterprise, Version 1903 Windows Server 2012 R2 Update (Standard) Windows Server 2016 (Standard, Datacenter) Windows Server 2019 (Standard, Datacenter) For max. 4 CP 1623	
• Goods delivery Software and electronic manual on CD, license key on USB flash drive	6GK1716-1CB16-0AA0
• Online delivery Software and license key download : Email address required!	6GK1716-1CB16-0AK0
Activation licenses when using redundant AS	
•	

Selection and ordering data (continued)

SIMATIC NET HARDNET-IE S7-REDCONNECT V16 S7 communications software for fail-safe S7 communication over redundant networks with license for up to 4 Industrial Ethernet CPs Runtime software, 2 languages (English, German); for Windows 7 SP1, 64-bit (Professional / Enterprise / Ultimate) Windows 10 Pro / Enterprise, Version 1809 Windows 10 Pro / Enterprise, Version 1903 Windows Server 2012 R2 Update (Standard) Windows Server 2016 (Standard, Datacenter) Windows Server 2019 (Standard, Datacenter) For max. 4 CP 1623	
• Goods delivery Software and electronic manual on CD, license key on USB flash drive	6GK1716-0HB16-0AA0
• Online delivery Software and license key download : Email address required!	6GK1716-0HB16-0AK0
•	
SIMATIC NET HARDNET-IE S7-REDCONNECT PowerPack V16 For expansion of HARDNET-IE S7 communications software to HARDNET-IE S7-REDCONNECT, with license for up to 4 Industrial Ethernet CPs 2 languages (English, German) for Windows 7 SP1, 64-bit (Professional / Enterprise / Ultimate) Windows 10 Pro / Enterprise, Version 1809 Windows 10 Pro / Enterprise, Version 1903 Windows Server 2012 R2 Update (Standard) Windows Server 2016 (Standard, Datacenter) Windows Server 2019 (Standard, Datacenter) For max. 4 CP 1623	
• Goods delivery Software and electronic manual on CD, license key on USB flash drive	6GK1716-0HB16-0AC0
• Online delivery Software and license key download : Email address required!	6GK1716-0HB16-0AK1

© Siemens AG 2024

Selection and ordering data (continued)

System connection for plant bus communication via standard network adapter and Basic Communication Ethernet for single stations and servers which are not based on a SIMATIC PCS 7 Industrial Workstation	
SIMATIC PCS 7 BCE V10.0 Runtime license for plant bus communication via standard network adapter and Basic Communication Ethernet; integrated with SIMATIC PCS 7 Industrial Workstations 3 languages (English, French, German), software class A Runs with Windows 10 2019/2021 LTSC or Windows Server 2019/2022, floating license for 1 user • Goods delivery - License key on USB flash drive, Certificate of License	6ES7650-1CD78-2YB5
• Online delivery - License key download, online Certificate of License Email address required!	6ES7650-1CD78-2YH5
Components for connecting SIMATIC PCS 7 stations to a redundant terminal bus with PRP	
SIMATIC NET SOFTNET-IE RNA V16 Software for connecting PCS 7 stations to PRP-enabled networks with integrated SNMP Runtime software, 2 languages (English, German), software class A, for Windows 7 SP1, 64-bit (Professional / Enterprise / Ultimate) Windows 10 Pro / Enterprise, Version 1809 Windows 10 Pro / Enterprise, Version 1903 Windows Server 2012 R2 Update (Standard) Windows Server 2016 (Standard, Datacenter) Windows Server 2019 (Standard, Datacenter) Single license for 1 installation Goods delivery Software and electronic manual on CD, license key on USB flash drive	6GK1711-1EW16-0AA0
Industrial Ethernet SCALANCE X204RNA router With integrated SNMP access, web diagnostics and PROFINET diagnostics, for connecting non-PRP-enabled terminal devices to PRP networks; with operating instructions, Industrial Ethernet network manual and configuration software on CD	
• SCALANCE X204RNA with four 100 Mbps RJ45 ports	6GK5204-0BA00-2KB2
• SCALANCE X204RNA EEC with two 100 Mbps RJ45 ports and two RJ45/SFP combo ports	6GK5204-0BS00-3LA3

Selection and ordering data (continued)

Accessories for Industrial Ethernet SCALANCE X-204RNA network access	
IE FC TP standard cable GP 2×2 (type A) 4-wire, shielded TP installation cable for connecting to IE FC RJ45 outlet/IE FC RJ45 plug; PROFINET-compatible; with UL approval; sold by the meter; delivery unit max. 1 000 m, minimum order quantity 20 m	6XV1840-2AH10
IE FC RJ45 plug 180 2×2 RJ45 connector for Industrial Ethernet with rugged metal enclosure and integrated insulation displacement contacts for connecting Industrial Ethernet FC installation cables; with 180° cable outlet; for network components and CPs/CPUs with Industrial Ethernet interface	
• 1 pack = 1 unit	6GK1901-1BB10-2AA0
• 1 pack = 10 units	6GK1901-1BB10-2AB0
• 1 pack = 50 units	6GK1901-1BB10-2AE0
SFP plug-in transceiver	
• SFP991-1 (multimode, glass, up to 3 km)	6GK5991-1AD00-8AA0
• SFP991-1LH+ (single-mode, glass, up to 70 km, LH+)	6GK5991-1AE00-8AA0
• SFP991-1LD (single-mode, glass, up to 26 km)	6GK5991-1AF00-8AA0
LC plug MM[2)]	6GK1901-0RB10-2AB0
LC plug SM[2)]	6GK1901-0SB10-2AB0
FO robust cable GP 50/125/900[1)]	6XV1873-2R
FO robust cable GP 4x9/125/900[1)]	6XV1843-2R
SITOP compact 24 V/0.6 A 1-phase power supply with wide-range input 85 ... 264 V AC/110 ... 300 V DC, stabilized output voltage 24 V, rated output current value 0.6 A, slim-line design	6EP1331-5BA00
C-PLUG Removable data storage medium for simple replacement of devices in the event of a fault; for storing configuration or engineering and application data; can be used for SIMATIC NET products with C-plug slot	6GK1900-0AB00
System connection of automation systems	
SIMATIC NET CP 443-1 Communications module for connecting SIMATIC S7-400 to Industrial Ethernet through TCP/IP, ISO and UDP; PROFINET IO Controller, MRP; integrated real-time switch ERTEC with 2 ports; 2 × RJ45 interface; S7 communication, open communication (SEND/RECEIVE) with FETCH/WRITE, with or without RFC 1006, DHCP, SNMP V2, diagnostics, multicast, access protection over IP access list, initialization over LAN 10/100 Mbps with electronic manual on DVD	6GK7443-1EX30-0XE0

© Siemens AG 2024

Selection and ordering data (continued)

SIMATIC NET CP 443-1 Advanced With security functionality (firewall and VPN) Communications module for connection of SIMATIC S7-400 to Industrial Ethernet: 1 × 10/100/1000 Mbps; 4 × 10/100 Mbps (IE SWITCH); RJ45 ports; ISO; TCP; UDP; PROFINET IO controller, S7 communication; open communication (SEND/RECEIVE); S7 routing; IP configuration via DHCP/block; IP Access Control List; time synchronization; expanded web diagnostics; fast startup; PROFIenergy support; IP routing; FTP; web server; email; PROFINET CBA	**6GK7443-1GX30-0XE0**

1) Special fiber-optic cables, lengths and accessories available on request
2) Special tools and specially trained personnel are required for pre-assembling glass fiber-optic cables

© Siemens AG 2024

Overview

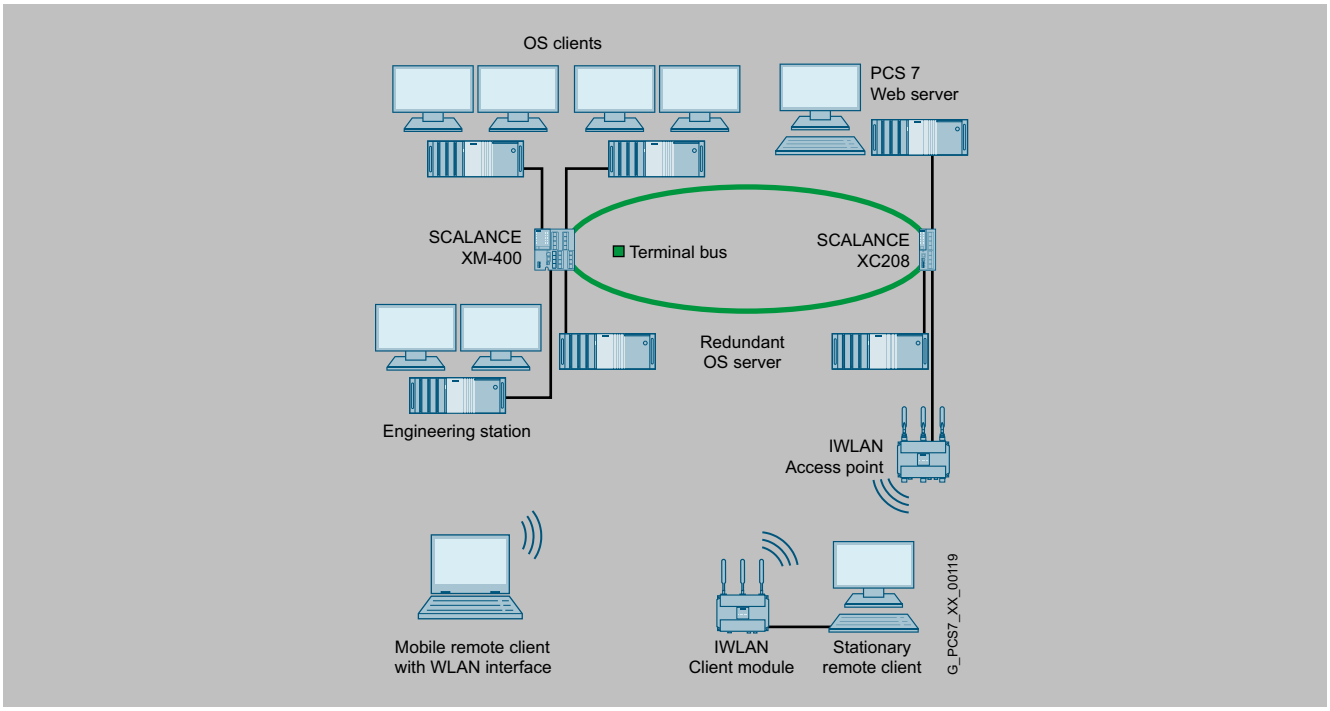

SIMATIC PCS 7 provides the option for integrating mobile or stationary remote clients via an Industrial Wireless LAN (IWLAN) access point of the SCALANCE W760, W770 or W780 product lines into the terminal bus.

The following applications, for example, can be implemented in this manner:

- Configuration of additional remote OS clients (up to 2 clients on IWLAN)
- Linking of web clients to a SIMATIC PCS 7 Web Server (up to 2 web clients on IWLAN)
- Remote access to an engineering station using the "RealVNC" software (Enterprise Edition), e.g., during commissioning

Mobile remote clients (e.g. notebooks) equipped with a WLAN interface can use it to communicate with the IWLAN access point. Stationary remote clients in a desktop/tower case (SIMATIC PCS 7 Industrial Workstations) require an IWLAN client module of the SCALANCE W720, W730 or W740 production lines for communication with the IWLAN access point.

The IWLAN client modules and the IWLAN access points of the SCALANCE W700 product family are extremely rugged, use state-of-the-art authentication and encryption procedures, and ensure high wireless channel reliability. By means of link aggregation and parallel use of several antennas (MIMO technology) in accordance with the international standard IEEE 802.11n you can achieve gross data transfer rates of up to 450 Mbps.

Various designs are offered for the following operational environments:

- IWLAN client modules and access points for control cabinets
- IWLAN client modules and access points for indoor use
- IWLAN access points for outdoor use

All IWLAN access points can also be configured as IWLAN client modules.

© Siemens AG 2024

Overview (continued)

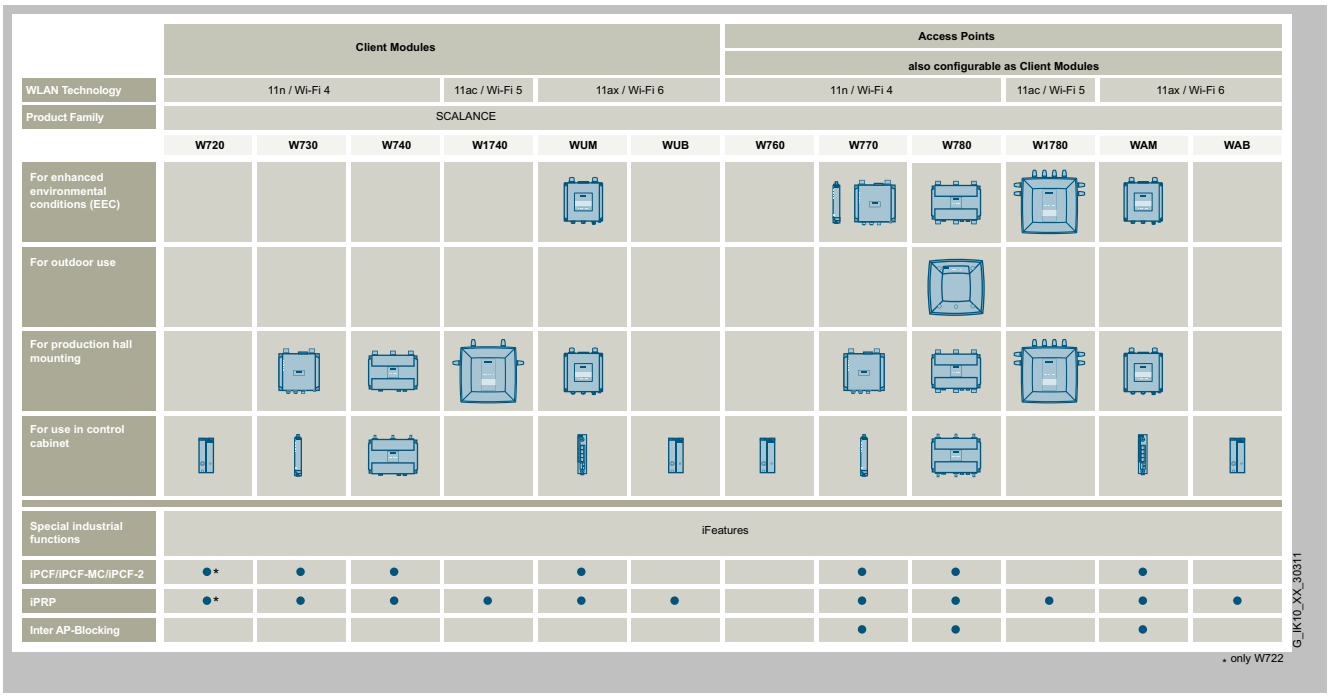

Portfolio SCALANCE W access points and clients W700 according to IEEE 802.11n and W1700 according to IEEE 802.11ac

The C-PLUG removable data storage medium for saving configuring data supports rapid exchange of equipment without specially trained personnel.

Furthermore, the KEY-PLUG removable data storage medium can also enable additional functions for products of the SCALANCE W700 family. A total of three KEY-PLUGs are available:

- KEY-PLUG W780 iFeatures
- KEY-PLUG W740 iFeatures
- KEY-PLUG W700 Security

Note:

Note that Industrial Wireless LAN is not approved as a terminal bus or plant bus of SIMATIC PCS 7.

© Siemens AG 2024

Design

Product categorization according to environment of use

IWLAN products for control cabinets

The IWLAN client modules and IWLAN access points intended for installation in control cabinets are a low-cost alternative for indoor areas with less harsh environmental conditions. They are particularly suited for setting up infrastructures in which great temperature differences and protection against dust and water are less important.

IWLAN products for indoor use

IWLAN client modules and IWLAN access points of this category can be installed at the location that is most favorable for the wireless link in indoor areas. The devices with IP65 degree of protection offer exceptional protection against dust and water and tolerate large differences in temperature. The enclosure and the connection plugs are resistant to high levels of shock and vibration.

IWLAN products for outdoor use

The IWLAN access points designed for installation outdoors and in publicly accessible areas are extremely rugged devices for high climatic demands and can be installed at a location that is most favorable for the wireless link. They are resistant to condensation, UV radiation, and salt spray.

IWLAN client modules	
SCALANCE W721-1 RJ45/ SCALANCE W722-1 RJ45 for the control cabinet	The W721 RJ45 and W722 RJ45 client modules with IP20 degree of protection are WLAN-capable devices according to the IEEE 802.11n WLAN standard with an RJ45 connection for 10/100 Mbps for integrated solutions from the control level down to the field. They offer reliable wireless real-time communication and stability for very high bandwidth requirements. The space-saving SCALANCE W720 client modules are suitable for applications in which the device is to be mounted in the control cabinet enabling the establishment of simple, cost-efficient wireless machine networks. Thanks to their SIMATIC design, automation components, such as the SIMATIC ET 200SP can be seamlessly integrated into an industrial WLAN to save space in the control cabinet. The device offers data rates up to 150 Mbps according to WLAN standard IEEE 802.11n.
SCALANCE W734-1 RJ45 for the control cabinet	The W734-1 RJ45 client module with IP30 degree of protection is a WLAN-capable device with two RJ45 connections for 10/100 Mbps, one of which has Power over Ethernet according to IEEE 802.3at, for integrated solutions from the control level down to the field. It offers reliable wireless real-time communication and stability for very high bandwidth requirements. Its compact design makes it deal to use; it also offers particularly reliable transmission of wireless signals through 2 antennas (2x2:2 MIMO). The client modules in SIMATIC S7-1500 design are suitable for applications where the device is to be mounted in the control cabinet. In perfect interaction with SIMATIC S7-1500, the device enables wireless data transmission and communication between the controller and an ET 200MP. This allows networks ranging from simple machine networks to large wireless areas to be implemented using MIMO technology with data transmission rates of up to 300 Mbps. Due to optional iFeatures provided by the KEY-PLUG W740 iFeature, it is also possible to perform wireless data transmission in real-time via PROFINET IO. (For details, see iFeatures brochure: https://w3app.siemens.com/mcms/infocenter/dokumentencenter/sc/ic/InfocenterLanguagePacks/IWLAN-iFeatures/IWLAN_iFeatures_EN_Web.pdf) Due to the compact design, the devices offer versatile mounting options using DIN rail mounting adapters, angled adapters or direct screw connection to the wall. The portfolio for the client module also includes an extensive selection of antennas.
SCALANCE W738-1 M12 for indoor use	The robust SCALANCE W738 M12 client module with IP65 degree of protection is a WLAN-capable device with two M12 connections for 10/100 Mbps, one of which has Power over Ethernet according to IEEE 802.3at, and is designed for integrated solutions from the control level to the field. It is suitable for industrial applications outside the control cabinet at locations optimal for wireless operation. In perfect interaction with SIMATIC S7-1500, the device enables wireless data transmission and communication between the controller and an ET 200MP. This allows networks ranging from simple machine networks to large wireless areas to be implemented using MIMO technology with data transmission rates of up to 300 Mbps. Due to optional iFeatures provided by the KEY-PLUG W740 iFeature, it is also possible to perform wireless data transmission in real-time via PROFINET IO. (For details, see iFeatures brochure: https://w3app.siemens.com/mcms/infocenter/dokumentencenter/sc/ic/InfocenterLanguagePacks/IWLAN-iFeatures/IWLAN_iFeatures_EN_Web.pdf) Due to the compact design, the devices offer versatile mounting options using DIN rail mounting adapters, angled adapters or direct screw connection to the wall. The portfolio for the client module also includes an extensive selection of antennas.

© Siemens AG 2024

Design (continued)

IWLAN client modules	
SCALANCE W748-1 M12 for indoor use 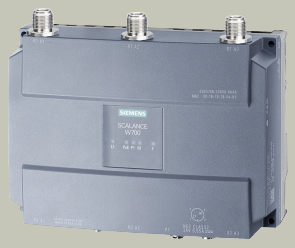	The robust SCALANCE W748 M12 client module with IP65 degree of protection is a WLAN-capable device with a 1 x M12 connection for 10/100/1000 Mbps with Power over Ethernet according to IEEE 802.3at for integrated solutions from the control level to the field. It is suitable for industrial applications outside the control cabinet. With data rates of up to 450 Mbps and the extension of the IEEE 802.11n standard by corresponding iFeatures, the SCALANCE client module W740 ensures reliable wireless communication in real time and stability with very high bandwidth requirements. The iFeatures with MIMO technology mentioned above, for example, enable clients to move freely over multiple wireless cells. (For details, see iFeatures brochure: https://w3app.siemens.com/mcms/infocenter/dokumentencenter/sc/ic/InfocenterLanguagePacks/IWLAN-iFeatures/IWLAN_iFeatures_EN_Web.pdf) This opens up new areas of application both indoors and outdoors, as well as under extreme operating conditions. The SCALANCE W748 M12 can also be used to set up applications along railway lines, in holiday parks or even applications with an EMERGENCY OFF function via a mobile panel. The portfolio for the client module also includes an extensive selection of antennas.
SCALANCE W748-1 RJ45 for the control cabinet 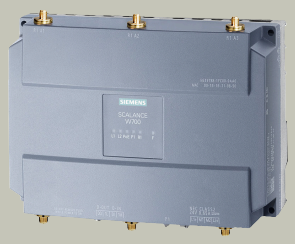	The SCALANCE W748 RJ45 client module with IP30 degree of protection is a WLAN-compatible device with an RJ45 connection for 10/100/1000 Mbps with Power over Ethernet according to IEEE 802.3at for integrated solutions from the control level down to the field with easy installation in the control cabinet. It is suitable for applications in which the client module is to be mounted in the control cabinet. With data rates of up to 450 Mbps and the extension of the IEEE 802.11n standard by corresponding iFeatures, the SCALANCE client module W740 ensures reliable wireless communication in real time and stability with very high bandwidth requirements. The iFeatures with MIMO technology mentioned above, for example, enable clients to move freely over multiple wireless cells. (For details, see iFeatures brochure: https://w3app.siemens.com/mcms/infocenter/dokumentencenter/sc/ic/InfocenterLanguagePacks/IWLAN-iFeatures/IWLAN_iFeatures_EN_Web.pdf) This opens up new areas of application both indoors and outdoors, as well as under extreme operating conditions. The SCALANCE W748 RJ45 can also be used to set up applications along railway lines, in holiday parks or even applications with an EMERGENCY OFF function via a mobile panel. The portfolio for the client module also includes an extensive selection of antennas.

IWLAN access points	
SCALANCE W761-1 RJ45 for the control cabinet	The SCALANCE W761 RJ45 access point with IP20 degree of protection and 1x RJ45 connection for 10/100 Mbps is ideally suited for setting up Industrial Wireless LAN (IWLAN) networks and for integrated solutions from the control level down to the field. The space-saving device supports 2.4 GHz and 5 GHz frequency bands and is suitable for applications where the device is to be mounted in the control cabinet. With the SCALANCE W761 RJ45 access point, you have the option of implementing wireless machine networking simply and cost-effectively. The portfolio for the access point also includes a comprehensive selection of antennas. It forms the counterpart to the W721 clients for cost-effective, point-to-point connections and enables wireless commissioning on the system. Thanks to their SIMATIC design, automation components such as an ET 200SP can be seamlessly integrated into an industrial WLAN to save space in the control cabinet. This is implemented according to the IEEE 802.11n standard and with data rates of up to 150 Mbps and can be expanded with video data thanks to the increased bandwidth.
SCALANCE W774-1 RJ45 for the control cabinet	The easy-to-install SCALANCE W774 RJ45 access point with IP30 degree of protection is a WLAN-capable device with two RJ45 connections for 10/100 Mbps, one of which has Power over Ethernet according to IEEE 802.3at, for integrated solutions from the control level to the field. The W774-1 RJ45 enables local wireless access to the system and coexistence with other wireless systems by supporting 2.4 GHz and 5 GHz frequency bands. The access points in the SIMATIC S7-1500 design are particularly suitable for applications in which the device is to be mounted in the control cabinet. In perfect interaction with SIMATIC S7-1500, the device enables wireless data transmission and communication between the controller and an ET 200MP. This allows networks ranging from simple machine networks to large wireless areas to be implemented using MIMO technology with data transmission rates of up to 300 Mbps. Due to optional iFeatures provided by the KEY-PLUG W780 iFeature, it is also possible to perform wireless data transmission in real-time via PROFINET IO. (For details, see iFeatures brochure: https://w3app.siemens.com/mcms/infocenter/dokumentencenter/sc/ic/InfocenterLanguagePacks/IWLAN-iFeatures/IWLAN_iFeatures_EN_Web.pdf)

© Siemens AG 2024

Design (continued)

IWLAN access points	
SCALANCE W774 M12 EEC **For an extended range of ambient conditions** 	The SCALANCE W774 M12 EEC compact access point with IP30 degree of protection is a WLAN-capable device with two M12 connections for 10/100 Mbps, of which one has Power over Ethernet according to IEEE 802.3at, which has railway approval and is suitable for mounting between walls. In perfect interaction with SIMATIC S7-1500, the device enables wireless data transmission and communication between the controller and an ET 200MP. This allows networks ranging from simple machine networks to large wireless areas to be implemented using MIMO technology with data transmission rates of up to 300 Mbps. Due to optional iFeatures provided by the KEY-PLUG W780 iFeature, it is also possible to perform wireless data transmission in real-time via PROFINET IO. (For details, see iFeatures brochure: https://w3app.siemens.com/mcms/infocenter/dokumentencenter/sc/ic/InfocenterLanguagePacks/IWLAN-iFeatures/IWLAN_iFeatures_EN_Web.pdf) The SCALANCE W774-1 M12 EEC access points meet requirements for rolling stock for railway applications (EN 50155, E1) thanks to their conformal coating PCBs.
SCALANCE W778-1 M12 for indoor use 	The rugged access point SCALANCE W778-1 M12 with IP65 degree of protection and two M12 connections for 10/100 Mbps, one of which has Power over Ethernet according to IEEE 802.3at, is ideal for setting up Industrial Wireless LAN (IWLAN) networks and for applications outside the control cabinet. Low-wear communication to mobile devices can be established through PROFINET or an EtherNet/IP connection via WLAN. The access point is suitable for simple, space-saving, cabinet-free, on-site installation in industrial and automation applications. In perfect interaction with SIMATIC S7-1500, the device enables wireless data transmission and communication between the controller and an ET 200MP. This allows networks ranging from simple machine networks to large wireless areas to be implemented using MIMO technology with data transmission rates of up to 300 Mbps. Due to optional iFeatures provided by the KEY-PLUG W780 iFeature, it is also possible to perform wireless data transmission in real-time via PROFINET IO. (For details, see iFeatures brochure: https://w3app.siemens.com/mcms/infocenter/dokumentencenter/sc/ic/InfocenterLanguagePacks/IWLAN-iFeatures/IWLAN_iFeatures_EN_Web.pdf) Due to the IP65 compatibility and the compact design of the devices, they can be used in harsh ambient conditions and offer versatile mounting options using DIN rail mounting adapters, angled adapters or direct screw connection to the wall. The portfolio for the access point also includes a comprehensive selection of antennas.
SCALANCE W778-1 M12 EEC **For an extended range of ambient conditions** SCALANCE W778-1 M12	The SCALANCE W778-1 M12 EEC robust access point with IP65 degree of protection and two M12 EEC connections for 10/100 Mbps, of which one connection has Power over Ethernet according to IEEE 802.3at, is ideal for setting up Industrial Wireless LAN (IWLAN) wireless networks and for applications outside the control cabinet. In addition, in combination with KEY-PLUG W700 Security, the device enables increased network security when "Inter AP Blocking" is activated. The access point is suitable for use in industry and automation in general, but especially for an extended range of ambient conditions such as in the railway environment. In perfect interaction with SIMATIC S7-1500, the device enables wireless data transmission and communication between the controller and an ET 200MP. This allows networks ranging from simple machine networks to large wireless areas to be implemented using MIMO technology with data transmission rates of up to 300 Mbps. Due to optional iFeatures provided by the KEY-PLUG W780 iFeature, it is also possible to perform wireless data transmission in real-time via PROFINET IO. (For details, see iFeatures brochure: https://w3app.siemens.com/mcms/infocenter/dokumentencenter/sc/ic/InfocenterLanguagePacks/IWLAN-iFeatures/IWLAN_iFeatures_EN_Web.pdf) Due to the IP65 compatibility and the compact design of the devices, they can be used in harsh ambient conditions and offer versatile mounting options using DIN rail mounting adapters, angled adapters or direct screw connection to the wall. The portfolio for the access point also includes a comprehensive selection of antennas. Thanks to conformal coating PCBs, the access points SCALANCE W774-1 M12 EEC and SCALANCE W778-1 M12 EEC meet the requirements for rolling stock for railway applications (EN 50155, E1).
SCALANCE W786-2 SFP for outdoor use 	The SCALANCE W786 SFP robust access point with IP65 degree of protection and 6 x R-SMA sockets for connecting remote antennas as well as two slots for SFP plug-in transceivers (optical 2-port switch) for integrated solutions from the control level to the field level with simple installation in the control cabinet. These access points are particularly well-suited to outdoor applications with demanding climatic requirements and in areas accessible to the public. With data rates of up to 450 Mbps according to the IEEE 802.11n standard, the access points enable reliable, wireless data transmission in real time. The portfolio for the access point also includes a comprehensive selection of antennas and numerous mounting options for a wide range of applications. iFeatures such as iPCF (industrial Point Coordination Function), which are connected via the KEY-PLUG W780 iFeatures, open up new areas of application: Data transmissions along rail tracks or in holiday parks, or even applications with EMERGENCY OFF function with PROFIsafe via wireless are possible. (For details, see iFeatures brochure: https://w3app.siemens.com/mcms/infocenter/dokumentencenter/sc/ic/InfocenterLanguagePacks/IWLAN-iFeatures/IWLAN_iFeatures_EN_Web.pdf)

© Siemens AG 2024

Design (continued)

IWLAN access points	
SCALANCE W786 RJ45 for outdoor use 	The SCALANCE W786 RJ45 robust access point with IP65 degree of protection and an RJ45 connection for 10/100/1000 Mbps and Power over Ethernet according to IEEE 802.3at for integrated solutions from the control level down to the field level with simple installation in the control cabinet. These access points are particularly well-suited to outdoor applications with demanding climatic requirements and in areas accessible to the public. With data rates of up to 450 Mbps according to the IEEE 802.11n standard, the access points enable reliable, wireless data transmission in real time. The portfolio for the access point also includes a comprehensive selection of antennas and numerous mounting options for a wide range of applications. iFeatures such as iPCF (industrial Point Coordination Function), which are connected via the KEY-PLUG W780 iFeatures, open up new areas of application: Data transmissions along rail tracks or in holiday parks, or even applications with EMERGENCY OFF function with PROFIsafe via wireless are possible. (For details, see iFeatures brochure: https://w3app.siemens.com/mcms/infocenter/dokumentencenter/sc/ic/InfocenterLanguagePacks/IWLAN-iFeatures/IWLAN_iFeatures_EN_Web.pdf) ***Product variants:*** • **SCALANCE W786-1 RJ45** A radio card is permanently installed in the device; functional scope can be expanded using a KEY-PLUG W780 iFeature • **SCALANCE W786-2 RJ45** Two radio cards permanently installed in the device; functional scope can be expanded using a KEY-PLUG W780 iFeature • **SCALANCE W786-2IA RJ45** Two wireless cards permanently installed in the device; six internal antennas; functional scope can be expanded using a KEY-PLUG W780 iFeature
SCALANCE W788 RJ45 for the control cabinet 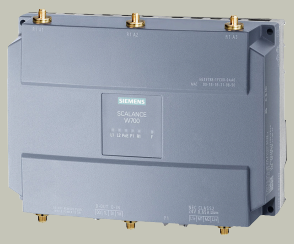	The robust SCALANCE W788 RJ45 access points with IP30 degree of protection and an RJ45 connection for 10/100/1000 Mbps with Power over Ethernet according to IEEE 802.3at are ideal for setting up Industrial Wireless LAN (IWLAN) wireless networks in which the access point is to be mounted in the control cabinet. With data rates of up to 450 Mbps according to the IEEE 802.11n standard, the access points enable reliable, wireless data transmission in real time. The portfolio for the access point also includes a comprehensive selection of antennas and numerous mounting options for a wide range of applications. iFeatures such as iPCF (industrial Point Coordination Function), which are connected via the KEY-PLUG W780 iFeatures, open up new areas of application: Data transmissions along rail tracks or in holiday parks, or even applications with EMERGENCY OFF function with PROFIsafe via wireless are possible. (For details, see iFeatures brochure: https://w3app.siemens.com/mcms/infocenter/dokumentencenter/sc/ic/InfocenterLanguagePacks/IWLAN-iFeatures/IWLAN_iFeatures_EN_Web.pdf) ***Product variants:*** • **SCALANCE W788-1 RJ45** A radio card is permanently installed in the device; functional scope can be expanded using a KEY-PLUG W780 iFeature • **SCALANCE W788-2 RJ45** Two radio cards permanently installed in the device; functional scope can be expanded using KEY-PLUG W780 iFeature
SCALANCE W788 M12 for indoor use 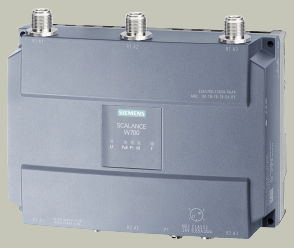	The robust SCALANCE W788 RJ45 access points with IP65 degree of protection and an M12 connection for 10/100/1000 Mbps with Power over Ethernet according to IEEE 802.3at are ideal for setting up Industrial Wireless LAN (IWLAN) wireless networks and for applications outside the control cabinet. With data rates of up to 450 Mbps according to the IEEE 802.11n standard, the access points enable reliable, wireless data transmission in real time. The portfolio for the access point also includes a comprehensive selection of antennas and numerous mounting options for a wide range of applications. iFeatures such as iPCF (industrial Point Coordination Function), which are connected via the KEY-PLUG W780 iFeatures, open up new areas of application: Data transmissions along rail tracks or in holiday parks, or even applications with EMERGENCY OFF function with PROFIsafe via wireless are possible. (For details, see iFeatures brochure: https://w3app.siemens.com/mcms/infocenter/dokumentencenter/sc/ic/InfocenterLanguagePacks/IWLAN-iFeatures/IWLAN_iFeatures_EN_Web.pdf) ***Product variants:*** • **SCALANCE W788-1 M12** A radio card is permanently installed in the device; functional scope can be expanded by using a KEY-PLUG W780 iFeature • **SCALANCE W788-2 M12** Two radio cards permanently installed in the device; functional scope can be expanded using a KEY-PLUG W780 iFeature

© Siemens AG 2024

Design (continued)

IWLAN access points	
SCALANCE W788 M12 EEC **For an extended range of ambient conditions** 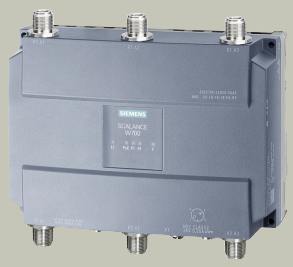	The SCALANCE W788 RJ45 robust access point with IP65 degree of protection and an M12 connection for 10/100/1000 Mbps with Power over Ethernet according to IEEE 802.3at Type 2 is ideally suited for setting up Industrial Wireless LAN (IWLAN) wireless networks and for applications outside the control cabinet. It also has an extended temperature range, special approvals and conformal coating. This enables wireless on-site networking of plant components in particularly harsh industrial environments and makes it suitable for use in industrial and automation applications, especially in railway environments. With data rates of up to 450 Mbps according to the IEEE 802.11n standard, the access points enable reliable, wireless data transmission in real time. The portfolio for the access point also includes a comprehensive selection of antennas and numerous mounting options for a wide range of applications. iFeatures such as iPCF (industrial Point Coordination Function), which are connected via the KEY-PLUG W780 iFeatures, open up new areas of application: Data transmissions along rail tracks or in holiday parks, or even applications with EMERGENCY OFF function with PROFIsafe via wireless are possible. (For details, see iFeatures brochure: https://w3app.siemens.com/mcms/infocenter/dokumentencenter/sc/ic/InfocenterLanguagePacks/IWLAN-iFeatures/IWLAN_iFeatures_EN_Web.pdf)

© Siemens AG 2024

Selection and ordering data

IWLAN Client Modules	
SCALANCE W721-1 RJ45 for the control cabinet IWLAN Ethernet client module with integrated wireless interface; wireless networks IEEE 802.11a/b/g/h/n at 2.4/5 GHz up to 150 Mbps; WPA2/AES; IP20 degree of protection (0 to +55 °C) Product package: Mounting hardware, 3-pin screw terminal for 24 V DC; manual on CD; English/German For administration of the wireless connection of one device with Industrial Ethernet connection	
• National approvals for operation outside the U.S.	6GK5721-1FC00-0AA0
• National approvals for operation within the U.S.[1]	6GK5721-1FC00-0AB0
SCALANCE W722-1 RJ45 for the control cabinet IWLAN Ethernet client module with iFeatures support and integrated wireless interface; wireless networks IEEE 802.11a/b/g/h/n at 2.4/5 GHz up to 150 Mbps; WPA2/AES; IP20 degree of protection (0 to +55 °C) Product package: Mounting hardware, 3-pin screw terminal for 24 V DC; manual on CD; English/German For administration of the wireless connection of one device with Industrial Ethernet connection; with iFeatures	
• National approvals for operation outside the U.S.	6GK5722-1FC00-0AA0
• National approvals for operation within the U.S.[1]	6GK5722-1FC00-0AB0
• Country approvals for operation in Israel[2]	6GK5722-1FC00-0AC0
SCALANCE W734-1 RJ45 for the control cabinet IWLAN Ethernet client module with integrated wireless interface; wireless networks IEEE 802.11a/b/g/h/n at 2.4/5 GHz up to 300 Mbps; WPA2/AES; integrated 2-port switch; Power over Ethernet (PoE), IP30 degree of protection (-20 to +60 °C) Product package: Mounting hardware, 4-pin screw terminal for 24 V DC; manual on CD; English/German For managing the wireless connection of up to eight linked devices with Industrial Ethernet connection	
• National approvals for operation outside the U.S.	6GK5734-1FX00-0AA0
• National approvals for operation within the U.S.[1]	6GK5734-1FX00-0AB0

Selection and ordering data (continued)

SCALANCE W738-1 M12 for indoor use IWLAN Ethernet client module with integrated wireless interface; wireless networks IEEE 802.11a/b/g/h/n at 2.4/5 GHz up to 300 Mbps; WPA2/AES; Power over Ethernet (PoE), IP65 degree of protection (-30 to +65 °C) Product package: Mounting hardware; manual on CD, English/German IWLAN Access Point with one integrated wireless interface	
• National approvals for operation outside the U.S.	6GK5738-1GY00-0AA0
• National approvals for operation within the U.S.[1]	6GK5738-1GY00-0AB0
SCALANCE W748-1 M12 for indoor use IWLAN Ethernet client module with integrated wireless interface; wireless networks IEEE 802.11a/b/g/h/n at 2.4/5 GHz up to 450 Mbps; WPA2/AES; Power over Ethernet (PoE), IP65 degree of protection (-20 to +60 °C) Product package: Mounting hardware; manual on CD, English/German For managing the wireless connection of up to eight linked devices with Industrial Ethernet connection	
• National approvals for operation outside the U.S.	6GK5748-1GD00-0AA0
• National approvals for operation within the U.S.[1]	6GK5748-1GD00-0AB0
SCALANCE W748-1 RJ45 for the control cabinet IWLAN Ethernet client module with integrated wireless interface; wireless networks IEEE 802.11a/b/g/h/n at 2.4/5 GHz up to 450 Mbps; WPA2/AES; Power over Ethernet (PoE), IP30 degree of protection (-20 to +60 °C) Product package: Mounting hardware; 4-pin screw terminal for 24 V DC, 4-pin screw terminal for digital input and output; manual on CD, German/English For administration of the wireless connection of up to eight devices with Industrial Ethernet connection; IP30 degree of protection	
• National approvals for operation outside the U.S.	6GK5748-1FC00-0AA0
• National approvals for operation within the U.S.[1]	6GK5748-1FC00-0AB0
IWLAN Access Points	
SCALANCE W761-1 RJ45 for the control cabinet IWLAN access point with integrated wireless interface; wireless networks IEEE 802.11a/b/g/h/n at 2.4/5 GHz up to 150 Mbps; WPA2/AES; IP20 degree of protection (0 to +55 °C) Product package: Mounting hardware, 3-pin screw terminal for 24 V DC; manual on CD; English/German IWLAN Access Point with one integrated wireless interface	
• National approvals for operation outside the U.S.	6GK5761-1FC00-0AA0
• National approvals for operation within the U.S.[1]	6GK5761-1FC00-0AB0

© Siemens AG 2024

Selection and ordering data (continued)

SCALANCE W774-1 RJ45 for the control cabinet IWLAN access point with an integrated wireless interface for establishing wireless connections with iFeatures; wireless networks IEEE 802.11a/b/g/h/n at 2.4/5 GHz up to 300 Mbps; WPA2/AES; integrated 2-port switch; Power over Ethernet (PoE), IP30 degree of protection (-20 to +60 °C) Product package: Mounting hardware, 4-pin screw terminal for 24 V DC; manual on CD; English/German IWLAN access point with one built-in wireless interface	
• National approvals for operation outside the U.S.	**6GK5774-1FX00-0AA0**
• National approvals for operation within the U.S.[1)]	**6GK5774-1FX00-0AB0**
• Country approvals for operation in Israel[1)]	**6GK5774-1FX00-0AC0**
SCALANCE W774-1 M12 EEC for an extended range of ambient conditions IWLAN access points with built-in wireless interface; wireless networks IEEE 802.11a/b/g/h/n at 2.4/5 GHz up to 300 Mbps; railway approval in accordance with EN 50155; conformal coating; WPA2/AES; Power over Ethernet (PoE), IP20 degree of protection Product package: Mounting hardware; manual on CD-ROM, English/German IWLAN Access Point with one integrated wireless interface	
• National approvals for operation outside the U.S.	**6GK5774-1FY00-0TA0**
• National approvals for operation within the U.S.[1)]	**6GK5774-1FY00-0TB0**
SCALANCE W778-1 M12 for indoor use IWLAN access point with built-in wireless interface (radio); IEEE 802.11a/b/g/h/n wireless network with 2.4/5 GHz up to 300 Mbps; 2x M12 max. 100 Mbps; M12 A-coded; plug slot WPA2/802.11i/e; integrated Power over Ethernet (PoE) 2-port switch; 2 N-CON antenna port, iFeatures support via KEY-PLUG; IP65 degree of protection; redundant 24 V DC; -20 to 60 °C Product package: Manuals on CD-ROM, English/German; M12 caps IWLAN Access Point with one integrated wireless interface	
• National approvals for operation outside the U.S.	**6GK5778-1GY00-0AA0**
• National approvals for operation within the U.S.[1)]	**6GK5778-1GY00-0AB0**

Selection and ordering data (continued)

SCALANCE W778-1 M12 EEC for an extended range of ambient conditions IWLAN access point with built-in wireless interface (radio); IEEE 802.11a/b/g/h/n wireless network with 2.4/5 GHz up to 300 Mbps; 2x M12 max. 100 Mbps; M12 A-coded; plug slot WPA2/802.11i/e; integrated Power over Ethernet (PoE) 2-port switch; 2 N-CON antenna port, iFeatures support via KEY-PLUG; IP65 degree of protection; redundant 24 V DC; -30 to 75 °C; conformal coating; EN 50155; EN45545 Product package: Manuals on CD-ROM, English/German; M12 caps	
• National approvals for operation outside the U.S.	**6GK5778-1GY00-0TA0**
• National approvals for operation within the U.S.[1)]	**6GK5778-1GY00-0TB0**
SCALANCE W786-2 SFP for outdoor use IWLAN access points with built-in wireless interfaces; wireless networks IEEE 802.11a/b/g/h/n at 2.4/5 GHz up to 450 Mbps; WPA2/AES; Power over Ethernet (PoE), IP65 degree of protection (-40°C to +60°C) Product package: Mounting hardware, 2-pin screw terminal for 24 V DC; manual on CD-ROM; English/German IWLAN access points with two integrated wireless interfaces and RJ45 connector, six external antennas	
• National approvals for operation outside the U.S.	**6GK5786-2FE00-0AA0**
• National approvals for operation within the U.S.[1)]	**6GK5786-2FE00-0AB0**
SCALANCE W786 RJ45 for outdoor use IWLAN access points with built-in wireless interfaces; wireless networks IEEE 802.11a/b/g/h/n at 2.4/5 GHz up to 450 Mbps; WPA2/AES; Power over Ethernet (PoE), IP65 degree of protection (-40°C to +60°C) Product package: Mounting hardware, 2-pin screw terminal for 24 V DC; manual on CD-ROM; English/German	
• **SCALANCE W786-1 RJ45** IWLAN access points with integrated wireless interface and RJ45 connector Connection for three external antennas	
- National approvals for operation outside the U.S.	**6GK5786-1FC00-0AA0**
- National approvals for operation within the U.S.[1)]	**6GK5786-1FC00-0AB0**
• **SCALANCE W786-2 RJ45** IWLAN access points with integrated wireless interfaces and RJ45 connector, six connections for external antennas	
- National approvals for operation outside the U.S.	**6GK5786-2FC00-0AA0**

© Siemens AG 2024

Selection and ordering data (continued)

- National approvals for operation within the U.S.[1]	6GK5786-2FC00-0AB0
- Country approvals for operation in Israel[1]	6GK5786-2FC00-0AC0
• **SCALANCE W786-2IA RJ45** IWLAN access point with integrated wireless interfaces and RJ45 connection Six internal antennas	
- National approvals for operation outside the U.S.	6GK5786-2HC00-0AA0
- National approvals for operation within the U.S.[1]	6GK5786-2HC00-0AB0
SCALANCE W788 RJ45 for the control cabinet IWLAN access points with integrated wireless interfaces; wireless networks IEEE 802.11a/b/g/h/n at 2.4/5 GHz up to 450 Mbps; WPA2/AES; Power over Ethernet (PoE), IP30 degree of protection (-20 to +60 °C) Product package: Mounting hardware; 4-pin screw terminal for 24 V DC, 4-pin screw terminal for digital input and output; manual on CD, German/English	
• **SCALANCE W788-1 RJ45** IWLAN access point with one integrated wireless interface	
- National approvals for operation outside the U.S.	6GK5788-1FC00-0AA0
- National approvals for operation within the U.S.[1]	6GK5788-1FC00-0AB0
• **SCALANCE W788-2 RJ45** IWLAN access point with integrated wireless interfaces	
- National approvals for operation outside the U.S.	6GK5788-2FC00-0AA0
- National approvals for operation within the U.S.[1]	6GK5788-2FC00-0AB0
- Country approvals for operation in Israel[1]	6GK5788-2FC00-0AC0
SCALANCE W788 M12 for indoor use IWLAN access point with integrated wireless interfaces; wireless networks IEEE 802.11a/b/g/h/n at 2.4/5 GHz up to 450 Mbps; WPA2/AES; Power over Ethernet (PoE), IP65 degree of protection (-20 to +60 °C) Product package: Mounting hardware; manual on CD, English/German	
• **SCALANCE W788-1 M12** IWLAN access point with integrated wireless interface	
- National approvals for operation outside the U.S.	6GK5788-1GD00-0AA0
- National approvals for operation within the U.S.[1]	6GK5788-1GD00-0AB0
• **SCALANCE W788-2 M12** IWLAN access point with integrated wireless interfaces	
- National approvals for operation outside the U.S.	6GK5788-2GD00-0AA0
- National approvals for operation within the U.S.[1]	6GK5788-2GD00-0AB0

Selection and ordering data (continued)

SCALANCE W788 M12 EEC for an extended range of ambient conditions IWLAN access points with built-in wireless interfaces; wireless networks IEEE 802.11a/b/g/h/n at 2.4/5 GHz up to 450 Mbps; railway approval in accordance with EN 50155 / NEMA TS2; conformal coating; WPA2/AES; Power over Ethernet (PoE), IP65 degree of protection Product package: Mounting hardware; manual on CD-ROM, English/German IWLAN dual access point with two integrated wireless interfaces	
• National approvals for operation outside the U.S.	6GK5788-2GD00-0TA0
• National approvals for operation within the U.S.[1]	6GK5788-2GD00-0TB0
Accessories	
KEY-PLUG W740 iFeatures Swap medium for enabling additional iFeatures, for simple device replacement if a fault occurs and for storage of configuration data; can be used in SCALANCE W client modules with PLUG compartment	6GK5907-4PA00
KEY-PLUG W780 iFeatures Swap medium for enabling additional iFeatures, for simple device replacement if a fault occurs and for storage of configuration data; can be used in SCALANCE W access points with PLUG compartment	6GK5907-8PA00
KEY-PLUG W700 Security Removable data storage medium for enabling security features for SCALANCE W700 access points, for simple device replacement if a fault occurs, and for storing configuration data	6GK5907-0PA00
C-PLUG Swap medium for simple replacement of devices in the event of a fault; for storing configuration data; can be used in SIMATIC NET products with PLUG compartment	6GK1900-0AB00
Standard DIN mounting rail mounting adapter Standard DIN mounting rail mounting adapter for SCALANCE W788 M12 and SCALANCE W788 RJ45; screw fixing for mounting on a 35 mm DIN mounting rail in accordance with EN 50022 Product package: 3 units per pack	6GK5798-8ML00-0AB3
Standard mounting rail angled adapter 90° angled adapter for mounting DIN mounting rails, only for use with SCALANCE W778/W778EEC/W738; and DIN mounting rail mounting adapter for 35 mm DIN mounting rail Product package: Fixing screws	6GK5798-8MA00-0AA1
Standard DIN mounting rail mounting adapter Standard DIN mounting rail mounting adapter, only for use in combination with SCALANCE W778/W778EEC/W738 Product package: Fixing screws	6GK5798-8MF00-0AA1

© Siemens AG 2024

Selection and ordering data (continued)

MS1 mounting set Mounting set for fixing the SCALANCE W786 products onto an S7-300 mounting rail or a 35 mm DIN mounting rail	6GK5798-8MG00-0AA0
Power supply	
PS791-2DC power supply 24 V DC power supply for installation in SCALANCE W786 products; operating instructions in English/German	6GK5791-2DC00-0AA0
PS791-2AC power supply 110 to 230 V AC power supply for installation in SCALANCE W786 products; operating instructions in English/German	6GK5791-2AC00-0AA0
Connection components	
SFP plug-in transceiver for SCALANCE W786-2 SFP	
• SFP992-1 Gigabit, multimode, 750 m	6GK5992-1AL00-8AA0
• SFP992-1LD Gigabit, single-mode, 10 km	6GK5992-1AM00-8AA0
• SFP992-1LH Gigabit, single-mode, 40 km	6GK5992-1AN00-8AA0
• SFP992-1LH+ Gigabit, single-mode, 70 km	6GK5992-1AP00-8AA0
Fiber-optic cables	See Catalog IK PI, Industrial Ethernet, cabling systems, glass fiber-optic cables
IE FC RJ45 plug 180 2×2 RJ45 plug connector for Industrial Ethernet with a rugged metal enclosure and integrated insulation-displacement contacts for connecting Industrial Ethernet FC installation cables; with a 180° cable outlet; for network components and CPs/CPUs with Industrial Ethernet interface	
• 1 pack = 1 unit	6GK1901-1BB10-2AA0
• 1 pack = 10 units	6GK1901-1BB10-2AB0
• 1 pack = 50 units	6GK1901-1BB10-2AE0
IE FC standard cable GP 2×2 4-core, shielded TP installation cable for connection to IE FC outlet RJ45 plug/IE FC RJ45 plug; PROFINET-compliant; with UL approval; sold by the meter; max. quantity 1 000 m, minimum order quantity 20 m	6XV1840-2AH10
IE FC RJ45 plug 4×2 Industrial Ethernet FastConnect RJ45 plug 180 4×2, RJ45 connector; CAT6A; (10/100/1000/10000 Mbps) with rugged metal enclosure and FC connection technology, for IE FC cable 4×2 (AWG24); 180° cable outlet	
• 1 pack = 1 unit	6GK1901-1BB12-2AA0
• 1 pack = 10 units	6GK1901-1BB12-2AB0
• 1 pack = 50 units	6GK1901-1BB12-2AE0
IE FC M12 plug PRO 4×2 M12 plug connector suitable for on-site assembly (X-coded, IP65/IP67), metal enclosure, insulation/displacement fast connection method, for SCALANCE W	
• 1 unit	6GK1901-0DB30-6AA0
• 8 units	6GK1901-0DB30-6AA8

Selection and ordering data (continued)

IE FC standard cable GP 4×2 8-core (4×2), shielded TP installation cable for connection to IE FC RJ45 plug 4×2 and IE M12 plug PRO 4×2; PROFINET-compliant; with UL approval; sold by the meter; max. length 1 000 m, minimum order quantity 20 m	6XV1878-2A
Power M12 Cable Connector PRO Socket for connection of SCALANCE W-700 for 24 V DC supply; 4-pin, A-coded, with mounting instructions, 3 units	6GK1907-0DC10-6AA3
Power cable 2×0.75 Connecting cable for Power M12 Cable Connector PRO, sold by the meter	6XV1812-8A
IE FC stripping tool Pre-adjusted stripping tool for fast stripping of the Industrial Ethernet FC cables	6GK1901-1GA00
Antennas and miscellaneous IWLAN accessories For IWLAN access points and IWLAN client modules	See Catalog IK PI, Industrial Wireless LAN, accessories

[1] Please note country approvals under: http://www.siemens.com/wireless-approvals

More information

For more information and detailed technical specifications on the IWLAN products for SIMATIC PCS 7, refer to Catalog IK PI, the Industry Mall or Catalog CA 01 under "Industrial Communication > Industrial Wireless Communication > Industrial Wireless LAN".

Selection tools

The SIMATIC NET Selection Tool and the TIA Selection Tool are available to assist in selecting the right IWLAN components:

- http://www.siemens.com/snst-standalone
- http://www.siemens.com/tia-selection-tool-standalone
- http://www.siemens.com/tstcloud

Radio approvals

Current approvals can be found on the internet:

- German: http://www.siemens.com/funkzulassungen
- English: http://www.siemens.com/wireless-approvals

© Siemens AG 2024

Overview

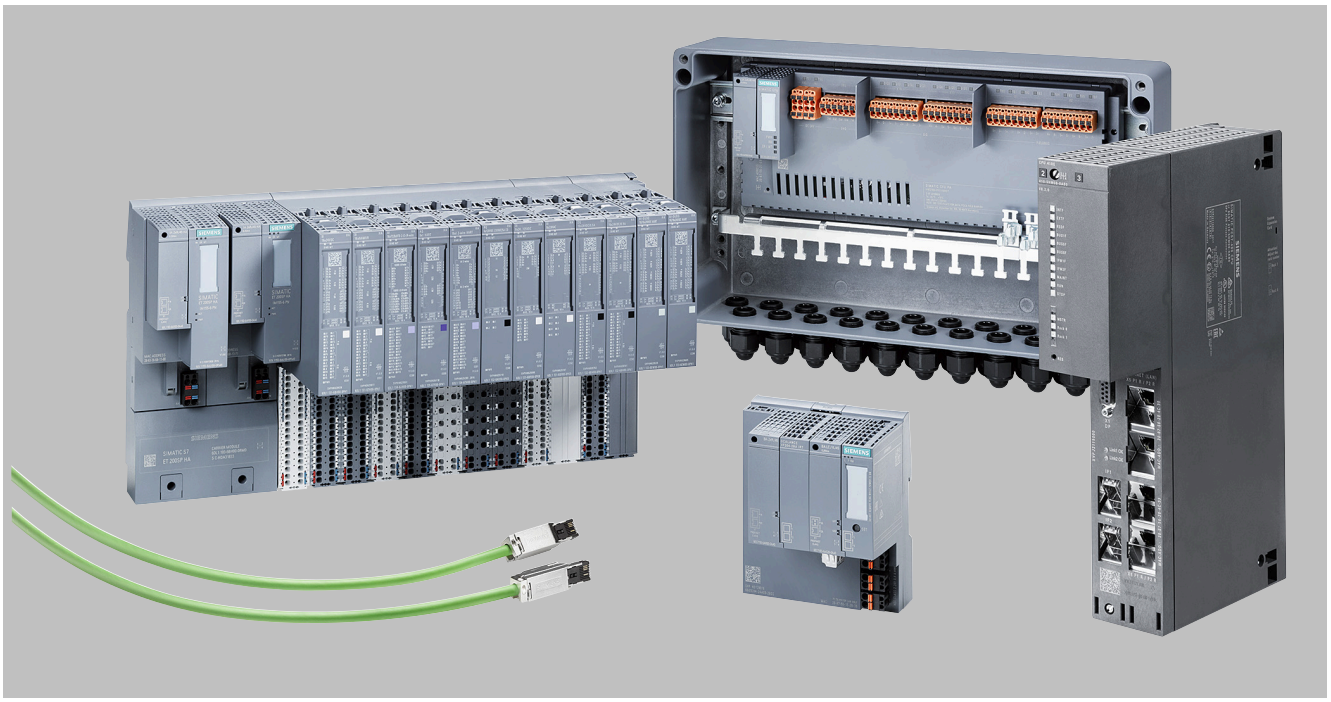

PROFINET in the process industry

PROFINET combines the advantages of PROFIBUS, the most popular fieldbus system worldwide, with modern Ethernet technology. PROFINET supports easy setup of flexible communication networks and ensures integrated, reliable and secure communication throughout the plant – in real time!

Greater flexibility, efficiency and performance in industrial communication – PROFINET has proven itself for many years in the manufacturing and machine environment and is the preeminent global standard in automation.

PROFINET more than meets the special requirements of the process industry regarding availability, flexibility, real-time capability and ruggedness. At the same time, the Ethernet-based technology provides easy handling.

With version 9.0 of SIMATIC PCS 7, the process industry can now also benefit from the latest communication technology since the conditions for this are now in place:

- Scalable system redundancy
- Changes possible in runtime ("Configuration in Run")
- High-precision time-of-day synchronization for sequence of events ("SoE")

The hardware portfolio has undergone fundamental further development in order to make full use of the new PROFINET options:

- CPU 410-5H V8.2
- SIMATIC ET 200SP HA
- SIMATIC CFU PA
- SCALANCE XF204-2BA DNA ("Y-switch")

© Siemens AG 2024

Benefits

- Ethernet at the field level
  - Integrated vertical and horizontal communication
  - Transmission of large amounts of data in real time
- Maximum availability if required
  - Changes during runtime
  - Freely scalable redundancy enables large cost reductions thanks to optimized custom solutions
- More flexibility
  - One shared plant network ensures free assignment of the devices to the controllers and makes it easy to expand the plant
  - Topologies are based on requirements and plant specification, which can result in savings of 60 % and more in cabling!
  - "One cable for all purposes" means better cost efficiency
- User-friendly
  - Simple device integration and fast device replacement during operation
  - Installation wizards and integrated device/network diagnostics
  - Implementation of secure communication layer in accordance with IEC 61784-3-3 (PROFIsafe)
- Investment protection
  - Integration of existing structures and technologies
  - Gradual transition from PROFIBUS DP to PROFINET

Application

PROFINET completely adheres to the Ethernet standard in accordance with IEEE 802.3, which makes it the reliable future-proof standard that paves the way for digitalization in the process environment.

Combine investment protection with security for the future: on the one hand, the open Industrial Ethernet standard supports the integration of existing plant parts and technologies. Appropriate solutions and products, such as the IE/PB LINK for integration of PROFIBUS DP and the SIMATIC CFU PA for integration of PROFIBUS PA, are available for this. On the other hand, worldwide standardization in accordance with IEC 61158/61784 and consistent ongoing development ensure the use of PROFINET over the entire life cycle of the plant and beyond. Even wireless communication technologies such as WLAN in accordance with IEEE 802.11 and mobile communications can be reliably integrated.

Wired communication is also easier and more cost-effective with PROFINET: the motto "One cable for all purposes" supports parallel operation of profiles such as PROFIsafe, PROFIdrive and other TCP/IP protocols without impacting basic plant communication.

There is also greater convenience: the PROFINET diagnostics available by default simplify installation and provide support for plant servicing. Network problems and device conflicts are reliably detected and can be quickly remedied. This also forms the basis for preventive maintenance. These benefits are worth the investment over the service life of the plant.

Customized to your requirements

PROFINET allows you to freely scale the availability of your plant based on your requirements. In addition to media redundancy (MRP), two forms of system redundancy are also available:

- Simple system redundancy (S2)
- Modular system redundancy (R1)

"Configuration in Run" allows you to implement plant changes during runtime without affecting process engineering.

Flexible architectures can potentially allow significant savings in wiring. This is confirmed by reference projects. In one case, 27 km of wiring (with PROFIBUS DP) could be reduced to 9 km through the use of PROFINET. Flexible architectures also support easier plant expansion without the need for spares.

The new hardware components use the BusAdapter technology, which enables easy and flexible connection to the PROFINET network either with copper cables (RJ45 or FastConnect) or fiber-optic cable.

© Siemens AG 2024

Function

Digitalization in the process industry significantly increases the amount of data (big data), requires continuous communication all the way to the field and needs flexible and secure communication networks. PROFINET is the answer:

- The best of both worlds
  - Compatible with PROFIBUS
  - Integrated device/network diagnostics
  - High data rates for more data, digital and in real time
  - Fail-safe communication is possible without special network components
- Standardization
  - Based on standard Ethernet according to IEEE 802.3
  - Preeminent open field bus standard worldwide
  - Supports IT services, for example TCP/IP
- Straightforward handling
  - Support during planning, operation and commissioning with automatic addressing and name assignment
  - Easy device replacement without additional tools with automatic neighborhood detection
  - Clear and simple installation guidelines

© Siemens AG 2024

Overview

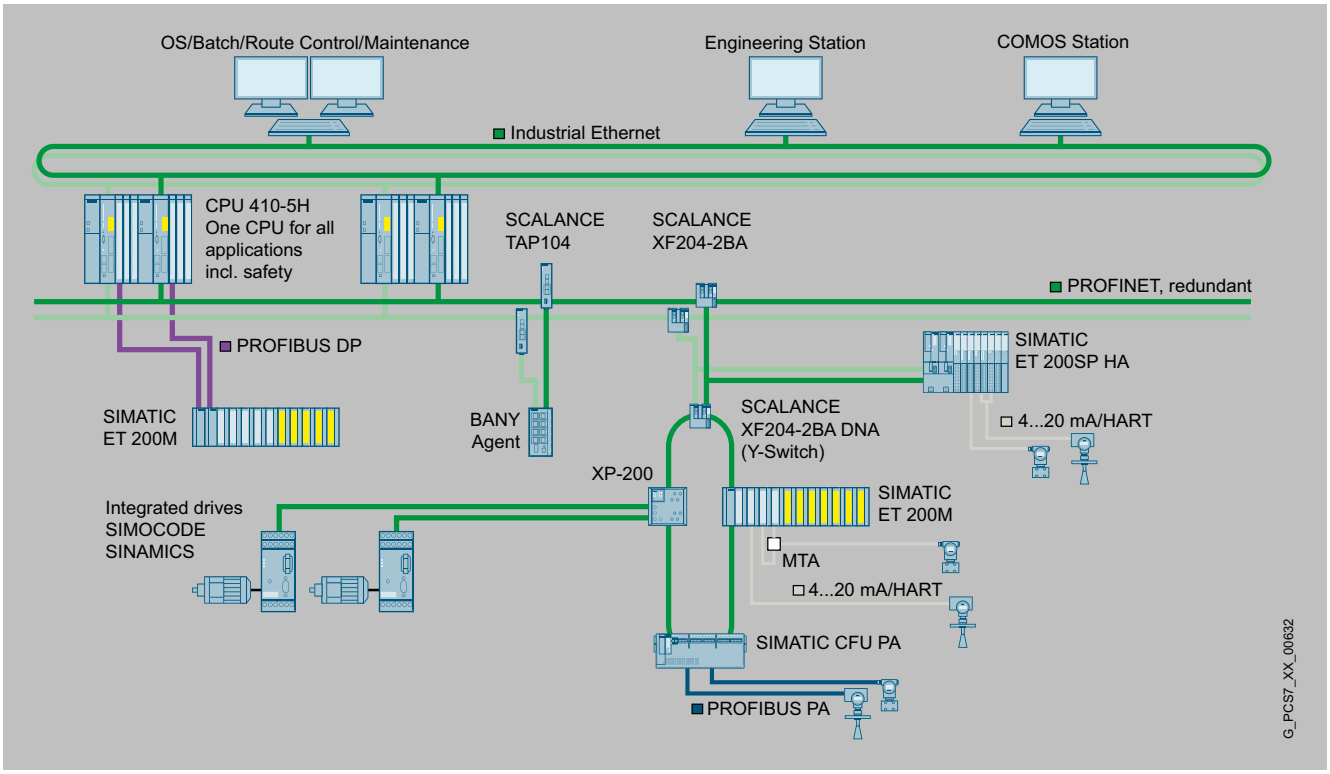

PROFINET in the process industry

When configuring PROFINET communication, it is generally recommendable to separate the field communication from the plant communication. In the context of the SIMATIC PCS 7 process control system, PROFINET mainly focuses on PROFINET IO communication between the automation systems (controllers) and the process I/O.

System components of SIMATIC PCS 7 with PROFINET capability

The SIMATIC PCS 7 system components suitable for PROFINET IO communication include:

- Automation systems (AS single stations and AS redundancy stations) with CPU 410-5H (firmware version V8.2) for complete PROFINET functionality
- SIMATIC PCS 7 AS RTX PROFINET and SIMATIC PCS 7 BOX RTX with PROFINET interface onboard
- SIMATIC ET 200SP HA with IM 155-6 PN interface module and BusAdapter
- SIMATIC CFU PA with BusAdapter
- SIMATIC ET 200M with IM 153-4 PN High Feature interface module
- SIMATIC ET 200SP with BusAdapter

In addition to specific PROFINET products, Industrial Ethernet products can also be used as network components, for example SCALANCE X switches and media converters, and FastConnect connecting elements, as well as electrical and optical transmission media (see "Industrial communication" chapter, "Industrial Ethernet", or "PROFINET/Industrial Ethernet" in the IK PI catalog).

Add-on product for SIMATIC PCS 7

In addition to the SIMATIC PCS 7 system components for PROFINET communication included in this catalog, the ST PCS 7 AO catalog includes add-on products for SIMATIC PCS 7 which support the integration of further PROFINET IO stations, e.g.

- SIMOCODE pro block library for integration of the SIMOCODE pro V PN motor management system via PROFINET IO
- Drive ES PCS 7 APL with function blocks and faceplates for integration of variable-speed SINAMICS drives via PROFINET IO
- Block library LIBRARY PAC/3WL/3VA SIMATIC PCS 7 for integration of 3VA power switches and 7KM PAC3200/4200 measuring devices
- AS-Interface block library for integration of AS-i slaves (sensors/actuators) via the IE/AS-i LINK PN IO (single or double master) on the PROFINET IO

© Siemens AG 2024

Overview

Industrial Ethernet/PROFINET switches specially designed for use in the process industry

To ensure full PROFINET functionality, special SCALANCE X switches, FastConnect connecting elements and electrical and optical transmission media are available as network components for the connection of devices with PROFINET capability to automation systems (AS single stations and AS redundancy stations) with CPU 410-5H (firmware version V8.2).

The following switches are recommended for use with SIMATIC PCS 7 with PROFINET at the field level. These devices support the relevant functions to enable full use of the possibilities provided by PROFINET.

	SCALANCE XF204-2BA SCALANCE XF204-2BA DNA	SCALANCE XC-200 SCALANCE XC-200EEC	SCALANCE XP-200
Installation	Control cabinet	Control cabinet	Outside control cabinet
Degree of protection	IP20	IP20	IP65
ATEX Zone 2	Yes	Yes	Yes
Interfaces	Electrical/optical with BusAdapter	Electrical/optical/SFPs	Electrical
Number of ports	4 (2 BA)	Max. 24, of which 2 Gbit ports (SFP)	Max. 16, of which 4 Gbit ports
Port characteristics	Depending on the type of BusAdapter (BA)	Max. 24 RJ45 Max. 2 SFP	8 × M12 D-coded or 12 × M12 D-/ 4 × M12 X-coded
SFPs	No	Yes	No
Use of BusAdapter (BA)	Yes	No	No
Temperature range	-40 to +70 °C	-40 to +70 °C	-40 to +70 °C
Conformal coating PCBs	Yes	Yes, for EEC versions	Yes, for EEC versions
PA ready	Yes	Yes	Yes
Dimensions W × H × D (in mm)	100 × 117 × 74	60/120 × 147 × 125	200/280 × 200 × 49

A description of the components specified can be found in the "Industrial Ethernet" section or under "PROFINET/Industrial Ethernet" in the IK PI catalog.

PA ready

For unrestricted use in process automation, IO devices must support at least the following functionalities:

- Simple system redundancy S2
- Media Redundancy Protocol (MRP)
- Configuration in RUN (CiR)

Siemens uses the PA ready symbols to uniquely identify the IO devices that meet the requirements of process automation with regard to availability and changes during operation.

Siemens thus provides comparable requirements for PROFINET IO devices in process automation – e.g. PROFIBUS & PROFINET International (PI). The PI subdivides IO devices into conformance classes (CC) depending on their range of functions: CC-A, CC-B and CC-C. There is also the CC-B (PA), an extension of the CC-B, designed particularly for process automation. It includes the system redundancy requirement and MRP and Configuration in Run as options.

Less stringent requirements for PA ready apply if IO devices are connected at the end of a line or in a star topology:

Modular end devices (e.g. ET 200SP HA)

- Simple system redundancy S2
- Configuration in RUN (CiR)

Compact end devices (e.g. SIMOCODE)

- Simple system redundancy S2

Service bridge based on SCALANCE XC-200

The SCALANCE XC-200 has an important role in architecture with PROFINET since it can be specially configured as a "service bridge".

An example of SCALANCE XC208 configuration as a service bridge can be found in the Siemens Industry Online Support.

© Siemens AG 2024

Overview

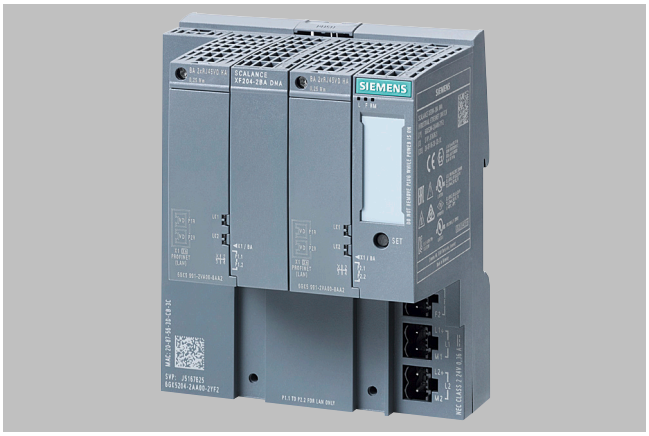

With the SCALANCE XF204-2BA DNA, Siemens offers a compact Industrial Ethernet switch specially designed for use with redundant SIMATIC S7-400H and SIMATIC S7-1500H systems in process as well as discrete automation. The switch with dual network access functionality (DNA or Y-switch functionality) combines a redundant PROFINET ring, consisting of S2 devices (field level), with a high-availability PROFINET system (R1 system).

- Connection of up to two modular BusAdapters (2 ports each) supported
- Enclosure in SIMATIC ET 200SP design (slim design, 100 mm wide) for space-saving use in small control boxes
- Integrated redundancy manager for configuring Fast Ethernet ring topologies with fast media redundancy MRP on device side
- End-to-end system diagnostics with PROFINET, SNMP access, integrated web server or SINEC NMS and automatic email transmission function for remote diagnostics and signaling via the network
- XF-200BA DNA versions are optimized for use in process automation and feature the following properties:
  - Conformal coating PCBs
  - Max. installation altitude 4 000 m - extended temperature range from -40 °C to +70 °C
  - NAMUR NE 21-compliant
  - Firmware support for S2 device and CiR/H-CiR
  - Release and integration capability in SIMATIC PCS 7 and PCS neo

The following BusAdapters are currently released for use with SCALANCE XF204-2BA DNA:

- SIMATIC ET 200SP HA, BusAdapter BA 2×RJ45, 2 RJ45 sockets
- SIMATIC ET 200SP HA, BusAdapter BA 2×FC, 2 FastConnect connections
- SIMATIC BA 2xRJ45VD HA, 2 RJ45 sockets with VD technology (variable distance)
- SIMATIC ET 200SP, BusAdapter BA 2XRJ45, 2 RJ45 sockets
- SIMATIC ET 200SP, BusAdapter BA 2xFC, 2x FastConnect connections
- SIMATIC ET 200SP, BusAdapter BA SCRJ/RJ45, 1x SCRJ FO connection and 1x RJ45 connection
- SIMATIC ET 200SP, BusAdapter BA SCRJ/FC, 1x SCRJ FO connection and 1x FastConnect (FC) connection

Overview (continued)

- SIMATIC ET 200SP, BusAdapter BA 2×SCRJ, 2 SCRJ FO connections
- SIMATIC ET 200SP, BusAdapter BA 2xLC (as of function status 05), 2x LC FO connection, (as of function status 05)
- SIMATIC ET 200SP, BusAdapter BA LC/RJ45, 1xRJ45, 1x LC FO connection, (as of function status 05)
- SIMATIC ET 200SP, BusAdapter BA LC/FC, 1xRJ45 FastConnect, 1x LC FO connection, (as of function status 05)
- SIMATIC ET 200SP HA, BusAdapter, BA 2xLC, 2x LC FO connection, (as of function status 05)

Product version

SCALANCE XF204-2BA DNA

- PROFINET S2 devices are switched to a high-availability R1 system with the SCALANCE XF204-2BA DNA (DNA = Dual Network Access).

Benefits

get Designed for Industry

- Integration of S2 devices in a highly available automation system, thus minimizing downtimes and increasing productivity in process automation
- Setup of networks in SIMATIC PCS 7/neo systems with extended environmental conditions (conformal coating)
- Small frame size (SIMATIC ET 200SP design and BusAdapter concept)
- Simple, flexible integration into automation solutions through selection of different BusAdapters
- Modular design with BusAdapters allows efficient spare part storage by using the same BusAdapter in multiple devices
- Approvals for ATEX Zone 2/IECEx, cULus HazLoc, FM, thus use in Zone 2 hazardous areas possible
- Conforms to NAMUR NE 21, integration in all conventional process control systems, such as SIMATIC PCS 7 and PCS neo
- Time savings during engineering, commissioning and in the operating phase of a plant by using the configuration and diagnostics integrated in STEP 7/TIA Portal
- Integration into the SINEC NMS network management system for end-to-end network diagnostics with central firmware management
- The 2xRJ45VD HA BusAdapter permits PROFINET communication up to 500 m
- Integration of switches in systems with simple S2 system redundancy and Configuration in Run (CiR/HCiR)
- Since Configuration in Run (CiR/H-CiR) is supported, PROFINET-defined configuration changes to the switch are performed during operation
- Easy integration in the process and system diagnostics with PROFINET via SIMATIC PCS 7 and PCS neo

© Siemens AG 2024

Application

PROFINET S2 devices are switched to a high-availability system with SCALANCE XF204-2BA DNA (Y-switch), which was previously only possible with PROFIBUS systems.

- The Y-switch combines a redundant PROFINET ring consisting of S2 devices (field level) with a high-availability PROFINET system (R1 system)
- This link connects the S2 devices to an H system thus further reducing the failure of field device communication with the CPU and thus significantly increasing the availability of the network as a whole

Features:

- Device diagnostics with LED (voltage/errors/redundancy)
- Remote diagnostics is possible through signaling contact (signal mask can be set locally using buttons), PROFINET, SNMP or SINEC NMS and web browser
- Automatic email send function
- Conformal coating PCBs
- Installation altitudes up to 4 000 m possible
- Extended temperature range from -40 °C to +70 °C
- NAMUR NE 21-compliant
- Firmware support of: S2 device and CiR/H-CiR. The devices are released for SIMATIC PCS 7 and PCS neo and are integration-capable

Y-switch functionality

The SCALANCE XF204-2BA DNA offers Y-switch functionality for connecting S2 devices to a high-availability R1 system. As well as the two Y-switch ports, two other switch ports are also available on the device side. These can be used to operate an MRP ring, for example.

Design

The SCALANCE XF204-2BA DNA managed Industrial Ethernet switch is designed for mounting on a standard DIN rail. With its SIMATIC ET 200SP format enclosure (slim design), the device is optimally suited for integration in automation solutions in small control boxes, e.g. together with the SIMATIC ET 200SP.

- The SCALANCE XF204-2BA DNA switch with its rugged plastic enclosure with IP20 degree of protection is optimized for mounting on standard DIN rails. Thanks to the dimensions of the SIMATIC ET 200SP enclosure, the devices are ideally suited for integration into an automation solution with SIMATIC ET 200SP components. In addition, the SCALANCE XF204-2BA NA is developed based on the recommendations of NAMUR NE21 and is thus specialized for the requirements of process automation.

The SCALANCE XF204-2BA DNA switch is available with the following port types/interfaces:

- 2 BusAdapter interfaces
- Version with two pre-assembled BusAdapters BA 2xRJ45 HA

© Siemens AG 2024

Function

- Assembly of electrical and optical Industrial Ethernet line, star and ring topologies on the device side
- Integral redundancy manager for design of ring topologies on the device side
- Easy diagnostics using signaling contact, SNMP and web browser
- Automatic email function
- Fast device replacement in the event of a fault by using the optional C-PLUG removable data storage medium (not included in scope of supply)

Network topology and network configuration

Connection of a PROFINET MRP ring to S2 devices, for example to the redundant network topology of a SIMATIC AS 410H.

The SCALANCE XF204-2BA DNA Industrial Ethernet switch with degree of protection IP20 is installed in a control cabinet together with the nodes to be connected. Electrical and optical versions can be installed together in star, line and ring topologies on the device side.

When configuring the network, the following boundary conditions must be observed:

- Length of the twisted pair cable between two SCALANCE XF-200BA DNA switches:
  - Max. 100 m with IE FC cable.
- IP address:

  The IP address is assigned via the DHCP (Dynamic Host Configuration Protocol). If there is no corresponding server in the network, the IP address can be assigned using the supplied software tool PST (Primary Setup Tool).

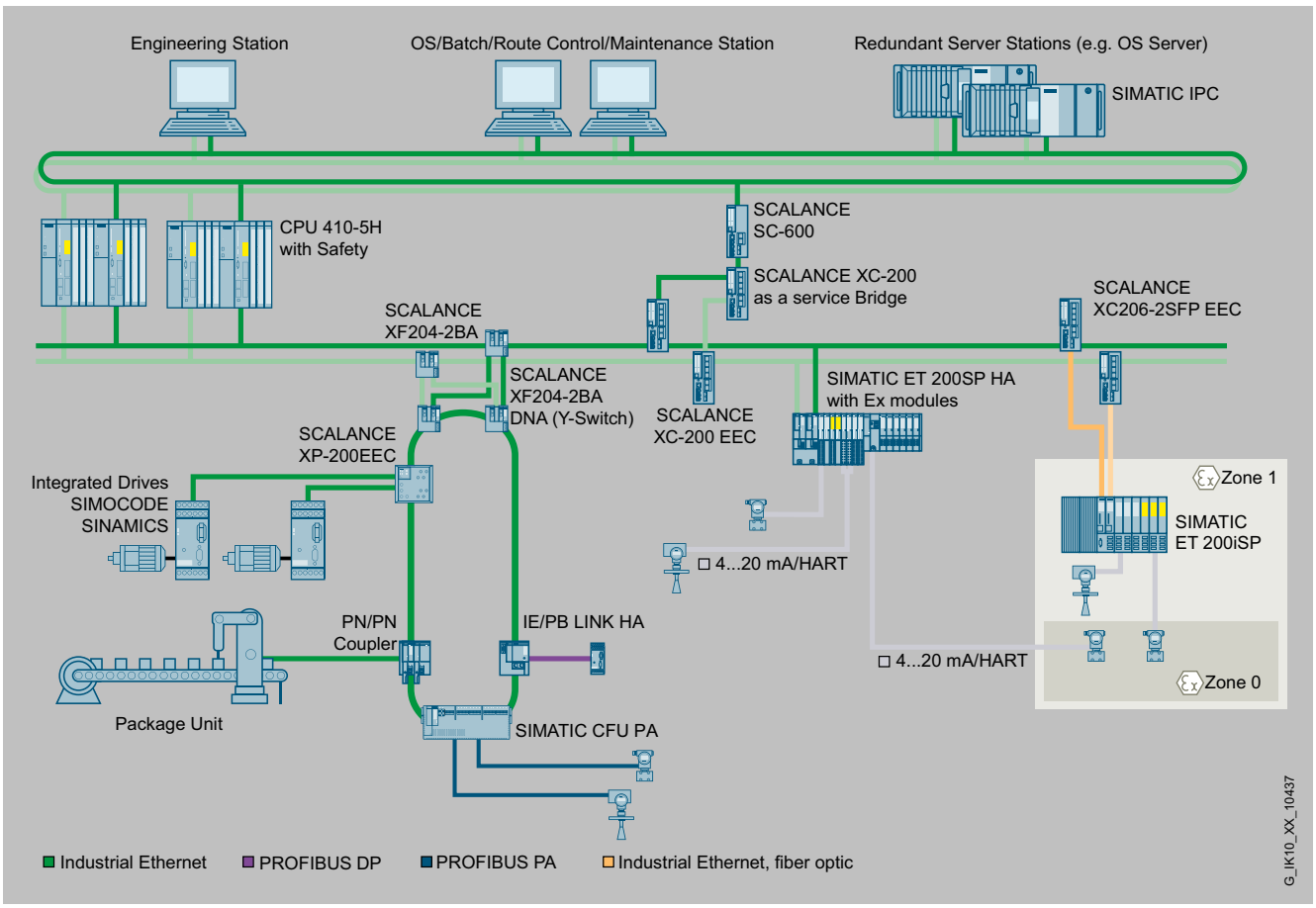

Integration of S2 devices in high availability R1 system with SCALANCE XF204-2BA DNA and XF204-2BA

Commissioning and diagnostics

The PROFINET diagnostic interrupt of the SCALANCE XF204-2BA DNA can be displayed with the appropriate SIMATIC engineering tools and processed in PLCs with the enhanced diagnostic function. The engineering outlay for the PLC and HMI has been drastically reduced due to the complete integration in the SIMATIC concept for system error messages.

The SCALANCE XF204-2BA DNA Industrial Ethernet switch can also be integrated into a network management system, e.g. SINEC NMS, through the standardized Simple Network Management Protocol (SNMP). In the event of faults in the device, error messages (SNMP traps) can be sent to a network management system (e.g. SINEC NMS) or as an email to a specified network administrator.

© Siemens AG 2024

Function (continued)

The integrated web server allows configuration and diagnostics settings, such as port configuration, using a standard web browser. Statistical information, such as port utilization, can also be read out via the web server.

The following information is displayed by LEDs on site:

- Voltage/power
- Errors
- Redundancy

Selection and ordering data

	Article No.
SCALANCE XF204-2BA DNA Industrial Ethernet switch Manageable Y-switch for linking S2 devices to an S7-400H with 2 x BusAdapter interfaces, 24 V DC redundant power supply, PN device, extended temperature range, conformal coating Configuration software on CD-ROM	
• **SCALANCE XF204-2BA DNA** 4 x 10/100 Mbps, 2 x BusAdapter interface, fault signaling contact, SET button, redundant 24 V DC power supply, PROFINET device, extended temperature range -40 °C ... +70 °C, conformal coating, with electronic manual on DVD, C-PLUG optional, supplied without BusAdapter	6GK5204-2AA00-2YF2
• **SCALANCE XF204 DNA** Two BA 2xRJ45 HA BusAdapters preassembled 6DL1193-6AR00-0AA0, 4 x 10/100 Mbps, 2 x BusAdapter interface, fault signaling contact, SET button, redundant 24 V DC power supply, PROFINET device, extended temperature range 40°C ... +70°C, conformal coating, with electronic manual on DVD, C-PLUG optional, supplied with BusAdapter	6GK5204-0BA00-2YF2

Accessories

	Article No.
SIMATIC ET 200SP PS 24 V/5 A Stabilized power supply Input: 120/230 V AC Output: 24 V DC/5 A	6EP7133-6AB00-0BN0
SIMATIC ET 200SP HA, BA 2×RJ45 BusAdapter, 2 RJ45 sockets PROFINET BusAdapter with Ethernet socket for standard RJ45 plug, with coated PCBs (conformal coating)	6DL1193-6AR00-0AA0
SIMATIC ET 200SP HA, BA 2×FC BusAdapter, 2 FastConnect connections PROFINET BusAdapter with FastConnect Ethernet connection for direct bus cable connection, with coated PCBs (conformal coating)	6DL1193-6AF00-0AA0
BA 2xRJ45VD HA BusAdapter BusAdapter with coated PCBs (conformal coating) and VD technology for connecting 2, 4 and 8-wire cables via standard RJ45 plugs	6GK5991-2VA00-8AA2
ET 200SP, BA 2xSCRJ BusAdapter SIMATIC ET 200SP, BA 2xSCRJ BusAdapter, 2 SCRJ FO connections for PROFINET	6ES7193-6AP00-0AA0
ET 200SP, BA SCRJ/RJ45 BusAdapter SIMATIC ET 200SP, BA SCRJ/RJ45 BusAdapter, media converter FOC-CU 1x SCRJ FO connection and 1x RJ45 connection for PROFINET	6ES7193-6AP20-0AA0
ET 200SP, BA SCRJ/FC BusAdapter SIMATIC ET 200SP, BusAdapter: BA SCRJ/FC, media converter FOC-CU 1x SCRJ FO connection and 1x FastConnect (FC) connection for PROFINET	6ES7193-6AP40-0AA0
C-PLUG (conformal coating) C-PLUG removable data storage medium for simple replacement of devices in the event of a fault; for storing configuration or engineering and application data; can be used in SIMATIC NET products with C-PLUG slot, conformal coating	6GK1900-0AQ00
IE TP cord RJ45/RJ45 Preassembled 8-core Cat6$_A$ patch cable 4 x 2, with two RJ45 plugs, preferred length	
• 0.3 m	6XV1870-3QE30
• 0.5 m	6XV1870-3QE50
• 1 m	6XV1870-3QH10
• 2 m	6XV1870-3QH20

© Siemens AG 2024

Accessories (continued)

	Article No.
• 3 m	6XV1870-3QH30
• 4 m	6XV1870-3QH40
• 6 m	6XV1870-3QH60
• 10 m	6XV1870-3QN10
• 15 m	6XV1870-3QN15
• 20 m	6XV1870-3QN20
• 25 m	6XV1870-3QN25
• 30 m	6XV1870-3QN30
• 35 m	6XV1870-3QN35
• 40 m	6XV1870-3QN40
• 45 m	6XV1870-3QN45
• 50 m	6XV1870-3QN50
FO standard cable GP 50/125/1400 Multimode cable, sold by the meter; max. delivery unit 1000 m, minimum order quantity 20 m, also available preassembled with LC connectors in various lengths	6XV1873-2A
SCALANCE TAP104 Test access port for the reaction-free extraction of Ethernet data frames (10/100 Mbps) from both transmission directions; extracts complete data traffic, including faulty frames, for further diagnostics.	6GK5104-0BA00-1SA2

© Siemens AG 2024

Technical specifications

Article number	6GK5204-2AA00-2YF2	6GK5204-0BA00-2YF2
product type designation		
product brand name	SCALANCE	SCALANCE
product type designation	XF204-2BA DNA	XF204-2DNA
transfer rate		
transfer rate	10 Mbit/s, 100 Mbit/s	10 Mbit/s, 100 Mbit/s
interfaces for communication integrated		
number of electrical connections		
• for network components or terminal equipment	0	4
interfaces other		
number of electrical connections		
• for signaling contact	1	1
• for power supply	1	1
type of electrical connection		
• for signaling contact	2-pole terminal block	2-pole terminal block
• for power supply	2-pole terminal block	2-pole terminal block
design of the removable storage		
• C-PLUG	Yes	Yes
operating voltage of the signaling contacts		
• at DC rated value	24 V	24 V
operational current of the signaling contacts		
• at DC maximum	0.1 A	0.1 A
supply voltage, current consumption, power loss		
product component connection for redundant voltage supply	Yes	
type of voltage 1 of the supply voltage	DC	DC
• supply voltage 1 rated value	24 V	24 V
• power loss [W] 1 rated value	8.6 W	8.6 W
• supply voltage 1 rated value	19.2 ... 28.8 V	19.2 ... 28.8 V
• consumed current 1 maximum	0.36 A	0.36 A
• type of electrical connection 1 for power supply	2-pole terminal block	2-pole terminal block
• product component 1 fusing at power supply input	Yes	Yes
• fuse protection type 1 at input for supply voltage	2.5 A (cannot be changed by user)	2.5 A (cannot be changed by user)
ambient conditions		
ambient temperature		
• during operation	-40 ... +70 °C	-40 ... +70 °C
• during storage	-40 ... +85 °C	-40 ... +85 °C
• during transport	-40 ... +85 °C	-40 ... +85 °C
relative humidity		
• at 25 °C without condensation during operation maximum	95 %	95 %
protection class IP	IP20	IP20
design, dimensions and weights		
design	compact	compact
width	100 mm	100 mm
height	117 mm	117 mm
depth	74 mm	74 mm
net weight	0.21 kg	0.25 kg
fastening method		
• 35 mm top hat DIN rail mounting	Yes	Yes
• wall mounting	No	No
• S7-300 rail mounting	No	No
• S7-1500 rail mounting	No	No

© Siemens AG 2024

Technical specifications (continued)

Article number	6GK5204-2AA00-2YF2	6GK5204-0BA00-2YF2
product features, product functions, product components general		
cascading in the case of a redundant ring at reconfiguration time of <\~0.3\~s	50	50
cascading in cases of star topology	any (depending only on signal propagation time)	any (depending only on signal propagation time)
product functions management, configuration, engineering		
product function		
• CLI	Yes	Yes
• web-based management	Yes	Yes
• MIB support	Yes	Yes
• TRAPs via email	Yes	Yes
• configuration with STEP 7	Yes	Yes
• port mirroring	Yes	Yes
• multiport mirroring	Yes	Yes
• PROFINET IO diagnosis	Yes	Yes
• switch-managed	Yes	Yes
PROFINET conformity class	B	B
network load class according to PROFINET	2	
protocol is supported		
• Telnet	Yes	Yes
• HTTP	Yes	Yes
• HTTPS	Yes	Yes
• TFTP	Yes	Yes
• FTP	No	No
• BOOTP	No	No
• DCP	Yes	Yes
• LLDP	Yes	Yes
• SNMP v1	Yes	Yes
• SNMP v2	Yes	Yes
• SNMP v3	Yes	Yes
identification & maintenance function		
• I&M0 - device-specific information	Yes	Yes
• I&M1 - higher level designation/location designation	Yes	Yes
product functions diagnostics		
product function		
• port diagnostics	Yes	Yes
• statistics Packet Size	Yes	Yes
• statistics packet type	Yes	Yes
• error statistics	Yes	Yes
product functions DHCP		
product function		
• DHCP client	Yes	Yes
product functions redundancy		
protocol is supported Media Redundancy Protocol (MRP)	Yes	Yes
product function		
• media redundancy protocol (MRP) with redundancy manager	Yes	Yes
• Media Redundancy Protocol for Planned Duplication (MRPD)	No	No
• of the PROFINET IO device is supported H-Sync forwarding	Yes	Yes

© Siemens AG 2024

Technical specifications (continued)

Article number	6GK5204-2AA00-2YF2	6GK5204-0BA00-2YF2
• of the PROFINET IO device is supported PROFINET system redundancy	Yes	Yes
• ring redundancy	Yes	Yes
• high speed redundancy protocol (HRP) with redundancy manager	Yes	Yes
• high speed redundancy protocol (HRP) with standby redundancy	Yes	Yes
• Parallel Redundancy Protocol (PRP)/operation in the PRP-network	No	No
• Parallel Redundancy Protocol (PRP)/Redundant Network Access (RNA)	No	No
• passive listening	Yes	Yes
system modification during operation		
product function configuration in RUN via CiR/H-CiR	Yes	
product functions security		
protocol is supported		
• SSH	Yes	Yes
product functions time		
product function		
• SICLOCK support	No	No
protocol is supported		
• NTP	No	No
• SNTP	Yes	Yes
standards, specifications, approvals		
certificate of suitability		
• CE marking	Yes	
• cULus approval	Yes	
• KC approval	Yes	
• Regulatory Compliance Mark (RCM)	Yes	
standard		
• for safety from CSA and UL	UL 508 E85972	
standards, specifications, approvals hazardous environments		
certificate of suitability		
• ATEX	Yes	
• UKEX	Yes	
• IECEx	Yes	
• ULhazloc approval	Yes	
• CCC for hazardous zone according to GB standard	Yes	
• FM registration	Yes	
standards, specifications, approvals other		
certificate of suitability		
• railway application in accordance with EN 50155	No	
• railway application in accordance with EN 50124-1	No	
• RoHS conformity	Yes	
IT security for industrial automation systems according to IEC 62443-4-2:2019	Yes	Yes
standards, specifications, approvals marine classification		
Marine classification association		
• American Bureau of Shipping Europe Ltd. (ABS)	Yes	
• French marine classification society (BV)	Yes	
• DNV GL	Yes	
• Korean Register of Shipping (KRS)	Yes	

© Siemens AG 2024

Technical specifications (continued)

Article number	6GK5204-2AA00-2YF2	6GK5204-0BA00-2YF2
• Lloyds Register of Shipping (LRS)	Yes	
• Nippon Kaiji Kyokai (NK)	Yes	
• Polski Rejestr Statkow (PRS)	Yes	
• Royal Institution of Naval Architects (RINA)	Yes	
standards, specifications, approvals Environmental Product Declaration		
Environmental Product Declaration	Yes	
Global Warming Potential [CO2 eq]		
• total	95.76 kg	
• during manufacturing	20.21 kg	
• during operation	75.23 kg	
• after end of life	0.32 kg	
product functions general		
reference code		
• according to IEC 81346-2	KF	KF
• according to IEC 81346-2:2019	KFE	KFE
Warranty period	5 a	5 a
product function is supported identification link	Yes; according to IEC 61406-1:2022	
further information internet links		
internet link		
• to website: Selection guide for cables and connectors	https://sup-port.industry.siemens.com/cs/ww/en/view/109766358	https://sup-port.industry.siemens.com/cs/ww/en/view/109766358
• to web page: selection aid TIA Selection Tool	https://www.siemens.com/tstcloud	https://www.siemens.com/tstcloud
• to website: Industrial communication	https://www.siemens.com/simatic-net	https://www.siemens.com/simatic-net
• to web page: SiePortal	https://sieportal.siemens.com/	https://sieportal.siemens.com/
• to website: Image database	https://www.automation.siemens.com/bilddb	https://www.automation.siemens.com/bilddb
• to website: CAx-Download-Manager	https://www.siemens.com/cax	https://www.siemens.com/cax
• to website: Industry Online Support	https://support.industry.siemens.com	https://support.industry.siemens.com

More information

Selection Tool:

To support the selection of SCALANCE network components, the TIA Selection Tool is available at:

www.siemens.com/tst

Ordering overview:

You can find more information on the FastConnect range in the "Cabling technology for communication networks in industry" ordering overview.

© Siemens AG 2024

Overview

IE/PB Link HA and IE/PB Link PN IO

IE/PB LINKs are gateways for connecting the two network types, Industrial Ethernet and PROFIBUS, i.e. they enable access to all PROFIBUS stations connected to the lower-level PROFIBUS network.

Product variants

Two variants are offered as gateways for Industrial Ethernet and PROFIBUS:

- **IE/PB LINK PN IO**
  Gateway with PROFINET IO functionality, S7 routing and data record routing for standard ambient conditions
- **IE/PB LINK HA**
  Gateway optimized for use in the process industry due to the possibility of deployment in harsh ambient conditions and the connection of PROFIBUS field devices to a redundant AS as PROFINET IO controller

Both product variants can be used in two operating modes:

Standard mode enables, for example, loading of programs and configuration data via PG/OP communication, data record routing for configuration and diagnostics of field devices with the SIMATIC PDM tool, S7 routing e.g. for cross-network loading of SIMATIC PLCs on PROFIBUS.

When operated as a PROFINET IO proxy, from the perspective of the PN IO controller, all PROFIBUS DP slaves connected after the IE/PB LINK are treated as PN IO devices according to the PROFINET standard, i.e. the IE/PB LINK is the proxy of the connected PROFIBUS DP slaves.

Both IE/PB LINK versions offer the possibility to use different transmission media by employing BusAdapters.

Benefits

get Designed for Industry

- Protection of investment due to simple connection of PROFIBUS DP slaves to PROFINET IO controller. This enables a step-by-step transition to modern PROFINET networks
- Independence from individual vendors through support of the PROFINET standard for distributed field devices
- Flexible use due to different connection system and hardware; copper (RJ45, FC) and fiber-optic cables (SCRJ for POF/PCF, LC for glass fiber-optic)
- Also enables use in plants with PROFIsafe applications
- Worldwide access to data of the PROFIBUS stations via Industrial Ethernet and Internet for vertical integration
- Access to process data from all enterprise levels
- Loading of STEP 7 programs from a central location
- Easy engineering and extensive diagnostics options due to optimum TIA integration

IE/PB LINK HA also offers:

- High availability through redundancy mechanisms in PROFINET IO through use as S2 device
- Interruption-free plant operation in the redundant system, even when configuration changes are required during operation, through support for Configuration in Run (H-CiR)
- Easy migration of large PROFIBUS networks to PROFINET by supporting up to 125 PROFIBUS DP slaves
- Reliable operation even in harsh ambient conditions

Application

As an autonomous component, both IE/PB LINK versions provide a seamless transition between Industrial Ethernet and PROFIBUS.

Using the IE/PB LINK as a proxy, you can continue to use existing PROFIBUS nodes (even with PROFIsafe functionality V2.0 or higher) and integrate them into a PROFINET application.

IE/PB LINK HA additionally offers connection to a redundant PROFINET IO automation system and the functionality Configuration in Run (H-CIR).

Both IE/PB LINK versions also offers cross-network PG/OP communication by means of S7 routing. Cross-network access to data of S7 stations for visualization with S7 OPC server and S7 routing; via the IE/PB LINK, access is possible from the Industrial Ethernet (for example for HMI applications with OPC client interface) to data of the S7 stations on the PROFIBUS using the S7 OPC server.

In addition, data record routing (PROFIBUS DP) is supported. This means it is possible, for example, to use SIMATIC PDM (on the PC) on Industrial Ethernet to configure and perform diagnostics for a PROFIBUS field device via the IE/PB LINK. IE/PB LINK HA also designed for use in harsh ambient conditions.

© Siemens AG 2024

Design

Both IE/PB LINK versions provide all the advantages of the SIMATIC ET 200SP design:

- Compact design;
  the front of the rugged plastic enclosure features:
  - Two RJ45 ports for connecting to Industrial Ethernet; the connection is made via the IE FC RJ45 plug 90 with 90° cable outlet or via a standard patch cable
  - A 9-pin sub-D socket for connection to PROFIBUS
  - A 4-pin terminal strip for connecting the external redundant supply voltage of 24 V DC (two infeeds)
  - Diagnostics LEDs
- Optional connection possibility for Industrial Ethernet via BusAdapter (BA) of the SIMATIC ET 200SP system at the front
- Easy installation on standard mounting rails
- Can be operated without a fan
- Fast device replacement in the event of a fault by using the optional C-PLUG removable data storage medium (not included in scope of supply)

Function

Compact gateway between PROFINET and PROFIBUS

- Connection to Industrial Ethernet via integrated 2-port real-time switch with 100 Mbps full duplex connection with autosensing for automatic switchover
- In case of replacement part: Connection to Industrial Ethernet also with 10 Mbps half duplex
- Connection to PROFIBUS with 9.6 Kbps to 12 Mbps
- Support for MRP (Media Redundancy Protocol) using integrated Real Time Switch
- SIMATIC ET 200SP design: Use of the BusAdapter (BA) of the SIMATIC ET 200SP system for freely selecting the connection system and physical characteristics on the PROFINET side

IE/PB LINK HA also offers

- Use in ambient temperatures from -40 °C to +70 °C
- Conformal coating
- Support for enhanced interference immunity according to NAMUR recommendation NE21

Operation as PROFINET IO proxy

- Connection of PROFIBUS DP slaves to PROFINET IO controller with real-time property, according to PROFINET standard. From the viewpoint of the controller, all DP slaves are treated like devices with PROFINET interface, i.e. the IE/PB LINK PN IO is their proxy

IE/PB LINK HA also offers

- Connection of PROFIBUS DP slaves to a redundant SIMATIC S7 controller (S7-400H) as PROFINET S2 device including support for Configuration in Run (H-CiR)
- Connection of up to 125 PROFIBUS DP slaves on the single controller and up to 64 PROFIBUS DP slaves in operation as S2 device on the redundant controller

Additional functionality for vertical integration (standard operation or operation as PROFINET IO proxy)

- S7 routing
  - Permits cross-network PG communication, in other words, all S7 stations on Industrial Ethernet or PROFIBUS can be programmed remotely using the programming device.
  - Access can take place to visualization data of S7 stations on the PROFIBUS from HMI stations on Industrial Ethernet.
- Data record routing (PROFIBUS DP)
  - Using this option, the IE/PB LINK PN IO can be used as a router for data records that are forwarded to field devices (DP slaves). SIMATIC PDM (Process Device Manager) is a tool that creates data records of this type for parameterization and diagnostics of field devices.
  - The configuration of the IE/PB LINK PN IO for standard mode is possible via SINEC PNI (Primary Setup Tool Network Initialization) as well as STEP 7 / TIA Portal

The supplementary functions for vertical integration can also be used in an existing PROFIBUS application without PROFINET IO for connection to a higher-level Industrial Ethernet.

In this case, the IE/PB Link PN IO is used as an additional DP master Class 2 on a PROFIBUS segment for coupling to Industrial Ethernet and offers the above functions.

© Siemens AG 2024

Function (continued)

Media redundancy (MRP):

- IE/PB LINK supports the media redundancy protocol MRP as an MRP client within a PROFINET network with a ring topology

Diagnostics

Extensive diagnostic options are available via STEP 7 or SNMP, including:

- Diagnostics of the assigned PROFIBUS field devices;
  using the IE/PB LINK as a proxy, the connected DP slaves can be diagnosed in the same manner as PROFINET IO devices (even in the user program of the PROFINET IO controller)
- General diagnostics and statistics functions
- Connection diagnostics
- Diagnostic buffer
- Integration into network management systems through the support of SNMP V1 MIB-II

Configuration

- With STEP 7 V5.x or STEP 7 Professional in the TIA Portal, all the necessary parameters for IE/PB Link, e.g. the addresses and all necessary routing information, are generated automatically
- The configuration data for PROFINET IO created with STEP 7 is saved on the IO controller. Attention must however be paid to the memory capacity.
- IE/PB LINK can be swapped in the event of failure without a programming device because the relevant configuration data is saved on the PN IO controller or on the C-PLUG.
- If the IE/PB LINK PN IO is only to be used as a gateway and not as a PROFINET IO device, the IE/PB LINK behaves like a simple network component. Accordingly, the IP and PROFIBUS parameters and the network settings can also be assigned with a STEP 7 Professional (TIA Portal) without a license
- The IP and PROFIBUS parameters as well as the network settings can also be assigned using SINEC PNI
- The initialization data for the Industrial Ethernet interface is backed up on the C-PLUG (configuration plug) removable data storage medium
- Use in networks that support an exchange of devices without programming devices on the basis of the Link Layer Discovery Protocol (LLDP)

© Siemens AG 2024

Integration

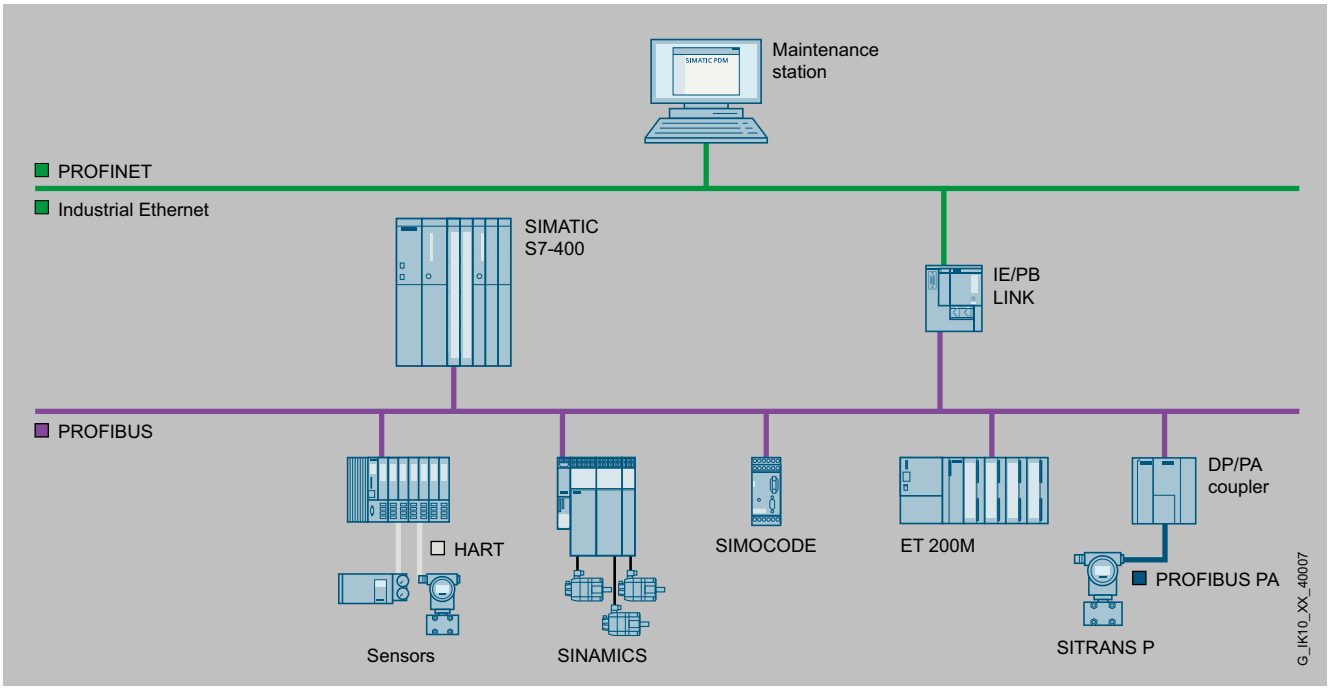

IE/PB LINK: Gateway in standard mode

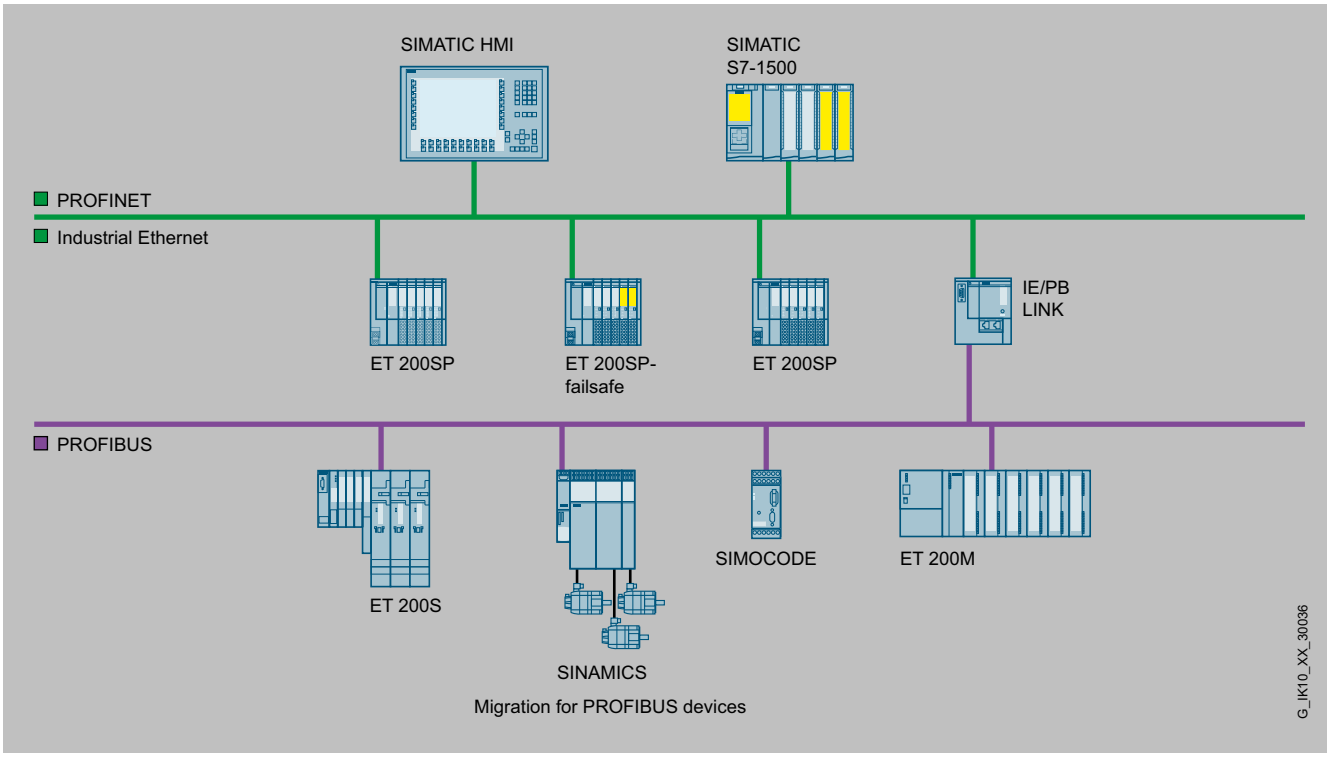

IE/PB LINK: PROFINET IO proxy

© Siemens AG 2024

Integration (continued)

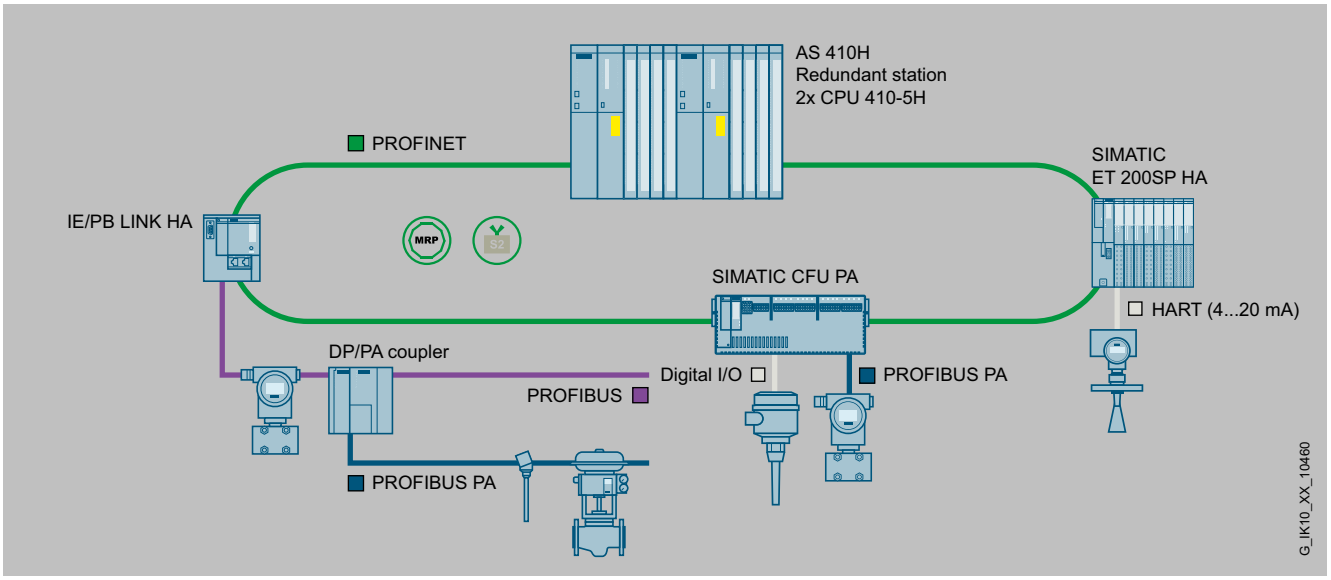

IE/PB LINK HA: System redundancy as S2 device in the MRP ring

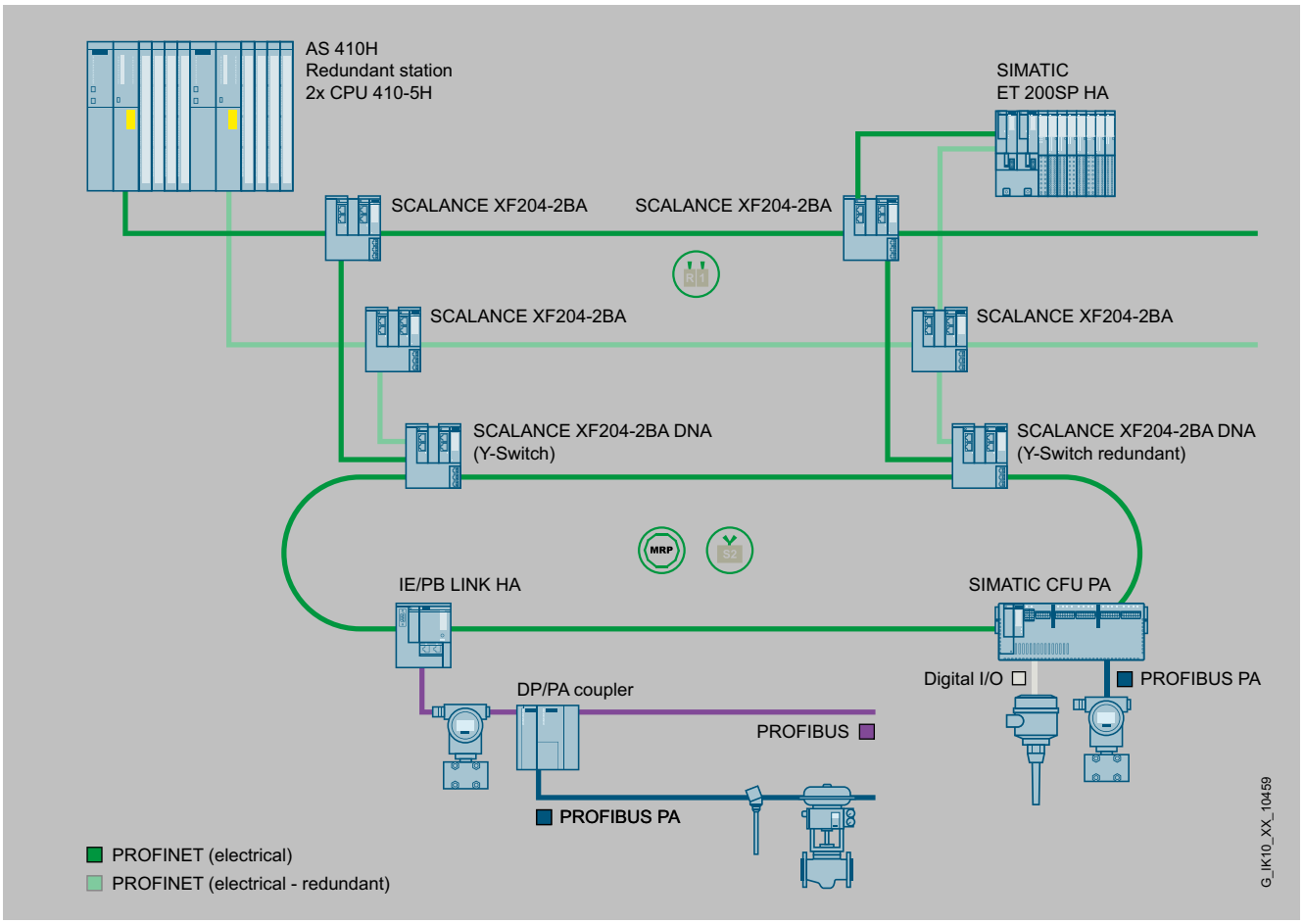

IE/PB LINK HA: PROFINET system redundancy on R1 system

© Siemens AG 2024

Selection and ordering data

	Article No.
IE/PB Link PN IO Gateway between Industrial Ethernet and PROFIBUS, PROFINET IO proxy with real-time communication, time synchronization via SIMATIC protocol, NTP, SNMP V1, LLDP, S7 routing, data record routing, connection of up to 64 S7/DPV0/DPV1 slaves, support for DP/PA LINK and DP/FF LINK, 10/100 Mbps Fast Ethernet, MRP, 9.6 kbps up to 12 Mbps PROFIBUS, firmware download via configuration tool, redundant power supply, firmware version V4.0 Gateway	**6GK1411-5AB10**
IE/PB LINK HA Gateway between Industrial Ethernet and PROFIBUS, PROFINET IO proxy with real-time communication, system redundancy S2, H-CiR, time synchronization via SIMATIC protocol, NTP, SNMP V1, LLDP, S7 routing, data record routing, connection of up to 125 S7/DPV0/DPV1 slaves, support for DP/PA LINK and DP/FF LINK, 10/100 Mbps Fast Ethernet, MRP, 9.6 kbps up to 12 Mbps PROFIBUS, firmware download via configuration tool, redundant power supply, conformal coating, extended temperature range -40 °C to 70 °C	**6GK1411-5BB00**
Accessories	
C-PLUG Removable data storage medium for easy device replacement if a fault occurs. For storing configuration and application data. Can be used in the following SIMATIC NET products with C-PLUG slot: SCALANCE XC-200, XP-200, XM-400, XR-500, M-800, W-700, SC-600 and S615	**6GK1900-0AB10**
BusAdapter BusAdapters offer a free selection of connection system and hardware for the PROFINET interface. Alternatively, they can be used for the Industrial Ethernet interface on the device. The following BusAdapter versions are supported by the IE/PB LINK PN IO: ***Variants with copper connection (RJ45, FastConnect (FC))***	
• BA 2xRJ45 with 2 RJ45 connections	**6ES7193-6AR00-0AA0**
• BA 2xFC with 2 FastConnect connections	**6ES7193-6AF00-0AA0**
• BA 2xRJ45 HA with 2 RJ45 sockets	**6DL1193-6AR00-0AA0**
• BA 2xFC HA with 2x FastConnect connection	**6DL1193-6AF00-0AA0**
• SIPLUS BusAdapter BA 2xRJ45 with 2 RJ45 connections	**6AG1193-6AR00-7AA0**
• SIPLUS BusAdapter BA 2xFC with 2 FastConnect connections	**6AG1193-6AF00-7AA0**

Selection and ordering data (continued)

	Article No.
• BA 2xRJ45 VD HA BusAdapter VD (variable distance), for Ethernet communication via 2-, 4- or 8-wire copper cables, 2xRJ45 sockets	**6GK5991-2VA00-8AA2**
Variants with fiber-optic connection (FOC)	
• BA 2xLC with LC glass fiber-optic connection	**6ES7193-6AG00-0AA0**
• BA 2xSCRJ with 2 x SCRJ FO connection	**6ES7193-6AP00-0AA0**
• BA 2xLC HA with 2 x LC glass fiber-optic connections	**6DL1193-6AG00-0AA0**
• SIPLUS BusAdapter BA 2xLC with LC glass fiber-optic connection	**6AG1193-6AG00-2AA0**
• SIPLUS BusAdapter BA2SCRJ with 2 x SCRJ FO connection	**6AG1193-6AP00-2AA0**
Media converter versions	
• BA LC/RJ45 Media converter glass fiber-optic cable/CU for 1 x LC FO connection and 1 x RJ45 connection	**6ES7193-6AG20-0AA0**
• BA LC/FC Media converter glass fiber-optic cable/CU 1 x LC FO connection and 1 x RJ45 connection	**6ES7193-6AG40-0AA0**
• BA SCRJ/RJ45 Media converter fiber-optic cable/CU 1 x SCRJ FO connection and 1 x RJ45 connection	**6ES7193-6AP20-0AA0**
• BA SCRJ/FC Media converter fiber-optic cable/CU 1 x SCRJ FO connection and 1 x FastConnect connection	**6ES7193-6AP40-0AA0**
• BA LC/RJ45 HA Media converter glass fiber-optic cable/CU, 1 x LC FO connection and 1 x RJ45 connection	**6DL1193-6AG20-0AA0**
• BA LC/FC HA Media converter glass fiber-optic cable/CU, 1 x LC FO connection and 1 x FastConnect connection	**6DL1193-6AG40-0AA0**

© Siemens AG 2024

Accessories

C-PLUG

BusAdapters

BusAdapters offer a free selection of connection system and hardware for the PROFINET interface. **Alternatively,** they can be used for the Industrial Ethernet interface on the device.

The following BusAdapter versions are supported by the IE/PB LINK PN IO:

Versions PN copper interfaces (RJ45 or FastConnect (FC))

- **BA 2xRJ45** with 2 RJ45 connections
- **BA 2xFC** with 2 FastConnect connections
- **BA 2xRJ45 HA** with 2 RJ45 sockets
- **BA 2xFC HA** with 2x FastConnect connection
- **BA 2xRJ45 VD HA** with 2 RJ45 connections for variable distance
- **SIPLUS BusAdapter BA 2xRJ45** with 2 RJ45 connections
- **SIPLUS BusAdapter BA 2xFC** with 2 FastConnect connections

Versions with PN fiber-optic connections (FO)

- **BA 2xLC** with two glass fiber-optic connections (Lucent Connector) with increased potential difference
- **BA 2xSCRJ** with 2 SCRJ FO connections with increased potential difference
- **BA 2xLC HA** with LC glass fiber-optic connection
- **SIPLUS BusAdapter BA 2xLC** with LC glass fiber-optic connection
- **SIPLUS BusAdapter BA2SCRJ** with 2 x SCRJ FO connection

Media converter versions:

- **BA SCRJ / RJ45**, with one glass fiber-optic and one RJ45 connection (media converter)
- **BA LC / FC** with one glass fiber-optic and one FastConnect connection (media converter)
- **BA SCRJ / RJ45**, with one SCRJ FO and one RJ45 connection (media converter)
- **BA SCRJ / FC**, with one SCRJ FO and one FastConnect connection (media converter)
- **BA LC/RJ45 HA** with one LC FO connection and one RJ45 connection
- **BA LC/FC HA** with one LC FO connection and one FastConnect connection

The version for connecting IP67 modules of the SIMATIC ET 200AL (BA-SEND, BA 1xFC) is not supported.

© Siemens AG 2024

Technical specifications

Article number product type designation	6GK1411-5AB10 IE/PB-Link PN IO	6GK1411-5BB00 IE/PB LINK HA
suitability for operation	Gateway between Industrial Ethernet and PROFIBUS	Gateway between Industrial Ethernet and PROFIBUS
transfer rate		
transfer rate		
• at the 1st interface	10 ... 100 Mbit/s	10 ... 100 Mbit/s
• at the 2nd interface	9.6 kbit/s ... 12 Mbit/s	9.6 kbit/s ... 12 Mbit/s
interfaces		
number of electrical connections		
• at the 1st interface according to Industrial Ethernet	2	2
• at the 2nd interface according to PROFIBUS	1	1
• for power supply	2	2
type of electrical connection		
• at the 1st interface according to Industrial Ethernet	RJ45 port onboard or bus adapter	RJ45 port onboard or bus adapter
type of electrical connection		
• at the 2nd interface according to PROFIBUS	9-pin Sub-D socket (RS 485)	9-pin Sub-D socket (RS 485)
• for power supply	4-pole terminal block	4-pole terminal block
design of the removable storage		
• C-PLUG	Yes	Yes
supply voltage, current consumption, power loss		
type of voltage of the supply voltage	DC	DC
supply voltage external at DC rated value	24 V	24 V
relative positive tolerance at DC at 24 V	20 %	20 %
relative negative tolerance at DC at 24 V	15 %	15 %
consumed current		
• from external supply voltage at DC at 24 V typical	0.2 A	0.2 A
• from external supply voltage at DC at 24 V maximum	0.3 A	0.3 A
power loss [W]	4.8 W; Typical	4.8 W; Typical
ambient conditions		
ambient temperature		
• for vertical installation during operation	0 ... 40 °C	-40 ... +50 °C
• for horizontally arranged busbars during operation	0 ... 60 °C	-40 ... +70 °C
• during storage	-40 ... +70 °C	-40 ... +70 °C
• during transport	-40 ... +70 °C	-40 ... +70 °C
relative humidity		
• at 25 °C without condensation during operation maximum	95 %	95 %
protection class IP	IP20	IP20
design, dimensions and weights		
module format	ET 200SP design	ET 200SP design
width	100 mm	100 mm
height	117 mm	117 mm
depth	74 mm	74 mm
net weight	0.6 kg	0.6 kg
product feature conformal coating		Yes
fastening method		
• 35 mm top hat DIN rail mounting	Yes	Yes
performance data PROFIBUS DP		
service as DP master		
• DPV0	Yes	Yes
• DPV1	Yes	Yes
number of DP slaves		
• at the 2nd interface as DP master maximum	64	125

© Siemens AG 2024

Technical specifications (continued)

Article number product type designation	6GK1411-5AB10 IE/PB-Link PN IO	6GK1411-5BB00 IE/PB LINK HA
data volume		
• of the address range of the inputs as DP master total	2 048 byte	4 096 byte
• of the address range of the outputs as DP master total	2 048 byte	4 096 byte
• of the address range of the inputs per DP slave	244 byte	244 byte
• of the address range of the outputs per DP slave	244 byte	244 byte
performance data S7 communication		
number of possible connections for S7 communication		
• maximum	32	32
performance data multi-protocol mode		
number of active connections with multi-protocol mode	48	48
performance data PROFINET communication as PN IO device		
product function PROFINET IO device	Yes	Yes
product functions management, configuration, engineering		
product function MIB support	Yes	Yes
protocol is supported		
• SNMP v1	Yes	Yes
• DCP	Yes	Yes
• LLDP	Yes	Yes
configuration software		
• required	STEP 7 as of V5.5 SP4 HF11 and HSP, STEP 7 Professional as of V15, PCS7 V9.0, PCS neo as of V3.0, PNI as of V1.0	STEP 7 as of V5.6 SP2 HF3 and HSP, STEP 7 Professional probably as of V17, PCS7 as of V9.0 SP3, PNI as of V1.0.
identification & maintenance function		
• I&M0 - device-specific information	Yes	Yes
• I&M1 - higher level designation/location designation	Yes	Yes
• I&M2 - installation date	Yes	Yes
• I&M3 - comment	Yes	Yes
product function is supported identification link	Yes; according to IEC 61406-1:2022	Yes; according to IEC 61406-1:2022
product functions routing		
service as PROFIBUS data set routing	Yes	Yes
number of possible connections with data set routing maximum	32	32
product functions redundancy		
product function		
• ring redundancy	Yes	Yes
product function of the PROFINET IO device is supported		
• PROFINET system redundancy	No	Yes; as S2-Device at CPU 410-5 H and S7 400H
protocol is supported Media Redundancy Protocol (MRP)	Yes	Yes
product functions time		
product function pass on time synchronization	Yes	Yes
protocol is supported		
• NTP	Yes	Yes
• SIMATIC time synchronization (SIMATIC Time)	Yes	Yes
standards, specifications, approvals hazardous environments		
certificate of suitability CCC for hazardous zone according to GB standard	Yes; GB3836.1, GB3836.8	Yes; GB3836.1, GB3836.8
certificate of suitability CCC for hazardous zone according to GB standard as marking	Ex nA IIC T4 Gc	Ex nA IIC T4 Gc
accessories		
accessories	Optional: C-PLUG, BusAdapter of the ET 200SP system	Optional: C-PLUG, BusAdapter of the ET 200SP system

© Siemens AG 2024

Technical specifications (continued)

Article number product type designation	6GK1411-5AB10 IE/PB-Link PN IO	6GK1411-5BB00 IE/PB LINK HA
further information internet links		
internet link		
• to web page: selection aid TIA Selection Tool	https://www.siemens.com/tstcloud	https://www.siemens.com/tstcloud
• to website: Industrial communication	https://www.siemens.com/simatic-net	https://www.siemens.com/simatic-net
• to web page: SiePortal	https://sieportal.siemens.com	https://sieportal.siemens.com
• to website: Image database	https://www.automation.siemens.com/bilddb	https://www.automation.siemens.com/bilddb
• to website: CAx-Download-Manager	https://www.siemens.com/cax	https://www.siemens.com/cax
• to website: Industry Online Support	https://support.industry.siemens.com	https://support.industry.siemens.com

More information

http://www.siemens.com/profinet

© Siemens AG 2024

Overview

BANY Agents without TAP/with TAP, BANY Bus Analyzer Agent XM-400

PROFINET offers the manufacturing and process industry new ways to set up flexible and high-performance plant networks to meet stricter increased security requirements. To ensure that these functions are reliable and secure from the outset, and can be easily checked and optimized over the course of the plant life cycle, Siemens provides high-performance products for the validation, analysis and continuous diagnosis of simple and high-availability PROFINET networks. The PROFINET Bus Analyzer (BANY) detects critical states in your network before an overload occurs or indeed a section of the network fails.

Benefits

- Permanent network monitoring for preventive maintenance and avoiding faults
- Online analysis of network quality in real time
- Rapid fault analysis and performance improvements during plant operation
- Clear status and event display of all devices installed in the network
- Simulation of PROFINET communication with various different loads
- Checking configured cycle time on the basis of the frame deviation (jitter) measured
- Validation of network including logging

© Siemens AG 2024

Design

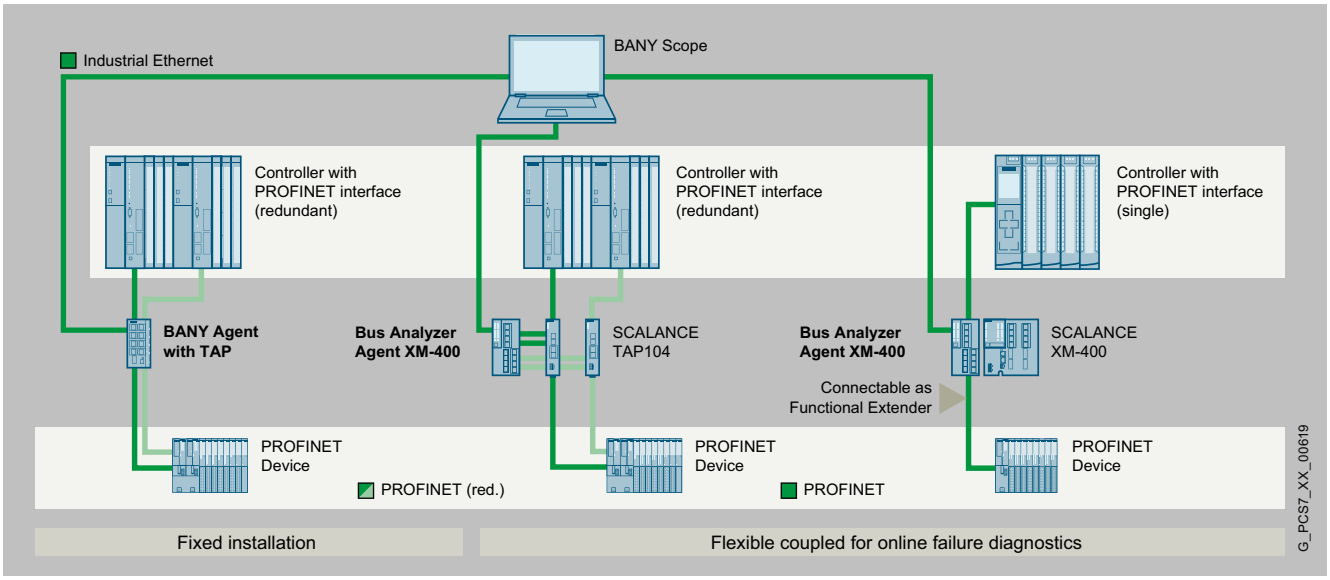

PROFINET Bus Analyzer (BANY)

BANY Agent

The BANY Agent hardware can be permanently integrated into the network for permanent plant monitoring. In the event of a fault, it can even be installed retroactively via a SCALANCE TAP104 or as a functional extender (Bus Analyzer Agent XM-400 only) on SCALANCE XM-400 switches for diagnosis during plant operation. Disconnection or interruption of the network in question is thus avoided and errors are rapidly analyzed so there are no long reproduction attempts.

BANY Agent enables the reaction-free extraction and evaluation of all frame communication online in real time. Thanks to two integrated TAPs (test access points), redundant PROFINET networks can also be evaluated.

BANY Scope

BANY Scope software enables access to multiple BANY Agents in the plant. This makes it possible to rapidly identify and eliminate error sources in the PROFINET networks in any part of the plant. The quality of the network can be quickly determined at any time on the basis of key data (network load, frame error, jitter, etc.).

For the validation of PROFINET networks, validation protocols are automatically created in accordance with the PROFINET planning and commissioning guidelines. Stress tests with differently simulated network loads can be carried out with the signal generator. This allows potential weak points to be identified and eliminated before the productive phase and ensures that plant availability meets strict requirements from the outset.

Validation is rounded off with the free PRONETA software, which automatically scans and clearly documents the topology, configuration and performance parameters of the PROFINET network. This allows qualified installation and efficient approval.

© Siemens AG 2024

Function

- Frame recording in internal memory or on external memory media (USB) with exact time stamping (resolution 10 ns)
  - Comprehensive trigger functions for filtering the recorded data
  - Interface to Wireshark and other export functions for detailed frame analysis
- Real-time PROFINET analysis for automatic calculation of all relevant bus parameters (frame number, frame error, network load, cycle time, jitter, etc.) in tables and diagrams
- Signal generator for performing offline and online stress tests (measurement of the frame run time, analysis of PROFINET RT and IRT with different network loads)
- Device lists for displaying device names, IP addresses, MAC addresses, device status, events, interruptions, and failures
- Online value monitoring in real time without affecting actual communication performance
- Control interface using script or TCP commands

Selection and ordering data

BANY Agent without TAP Ethernet 2-channel, without TAP (Test Access Point), signal generator	**9AE4140-1BA00**
BANY Agent with TAP 2-channel integrated TAP (test access point), Ethernet 2-channel	**9AE4140-1BA01**
BANY Bus Analyzer Agent XM-400 2-channel integrated TAP, Ethernet 4-channel, functional extender interface, 4 × SFP slots, signal generator	**9AE4140-2AA00**
SCALANCE TAP104 Test access port for frame export, 2 × RJ45 ports, 10/100 Mbps, LED diagnostics, 24 V DC power supply, manual	**6GK5104-0BA00-1SA2**

© Siemens AG 2024

Technical specifications

Article No.	9AE4140-1BA01 BANY Agent with TAP	9AE4140-1BA00 BANY Agent without TAP	9AE4140-2AA00 BANY Bus Analyzer Agent XM-400
Mounting options	• DIN standard mounting rail 35 mm[1)] • SIMATIC S7-300 mounting rail • Wall	• DIN standard mounting rail 35 mm[1)] • SIMATIC S7-300 mounting rail • Wall	• DIN standard mounting rail 35 mm[1)] • SIMATIC S7-300 mounting rail • SIMATIC S7-1500 mounting rail
Degree of protection	IP20	IP20	IP20
Connectors for terminal devices or network components			
• Electrical (over twisted pair)	7 x RJ45 sockets with MDI-X assignment 10/100/1 000 Mbps (half/full duplex)	3 x RJ45 sockets with MDI-X assignment 10/100/1 000 Mbps (half/full duplex)	5 x RJ45 ports with MDI-X assignment 10/100/1 000 Mbps (half/full duplex) 4 x RJ45 ports with MDI-X assignment 10/100 Mbps (half/full duplex)
• Electrical	1 × USB	1 × USB	USB 1.1 and USB 2.0, max. 500 mA
Electrical specifications			
Supply voltage	24 V DC	24 V DC	24 V DC (20.4 ... 28.8 V DC)
• Redundant power supply unit	No	No	No
• Redundant power supply possible	No	No	No
Overcurrent protection of the power supply	2 A / 32 V	2 A / 32 V	2 A / 32 V
Voltage over digital input/output	24 V DC	24 V DC	24 V DC
• Switching capacity (resistive load)	50 mA	50 mA	50 mA
Voltage at USB port	5 V DC	5 V DC	
• Output current, max.	500 mA	500 mA	
Current consumption	0.5 mA	0.3 mA	1 A
• Power loss	12 W	7.2 W	24 W
Permissible ambient conditions			
Storage/transport temperature	-40 to +70 °C	-40 to +70 °C	-40 to +85 °C
Operating temperature			
• Horizontal installation	-40 to +70 °C	-40 to +70 °C	-40 to +50 °C (stand-alone mode) -40 to +60 °C (XM400 function extender mode)
• Vertical installation	-40 to +50 °C	-40 to +50 °C	--
Max. ambient temperature at operating altitude			
• Horizontal installation 2 000 m and higher	65 °C	65 °C	50 °C (stand-alone mode) 60 °C (XM400 function extender mode)
• Horizontal installation 3 000 m and higher	60 °C	60 °C	50 °C
• Vertical installation 2 000 m and higher	45 °C	45 °C	--
• Vertical installation 3 000 m and higher	40 °C	40 °C	--
Max. relative humidity during operation at 25 °C	< 95% (no condensation)	< 95% (no condensation)	< 95% (no condensation)
Dimensions and weight			
Dimensions W x H x D in mm	60 × 125 × 125	40 × 125 × 125	70 × 150 × 125
Weight	1 400 g	1 100 g	750 g

[1)] Not for use in shipbuilding

© Siemens AG 2024

Overview

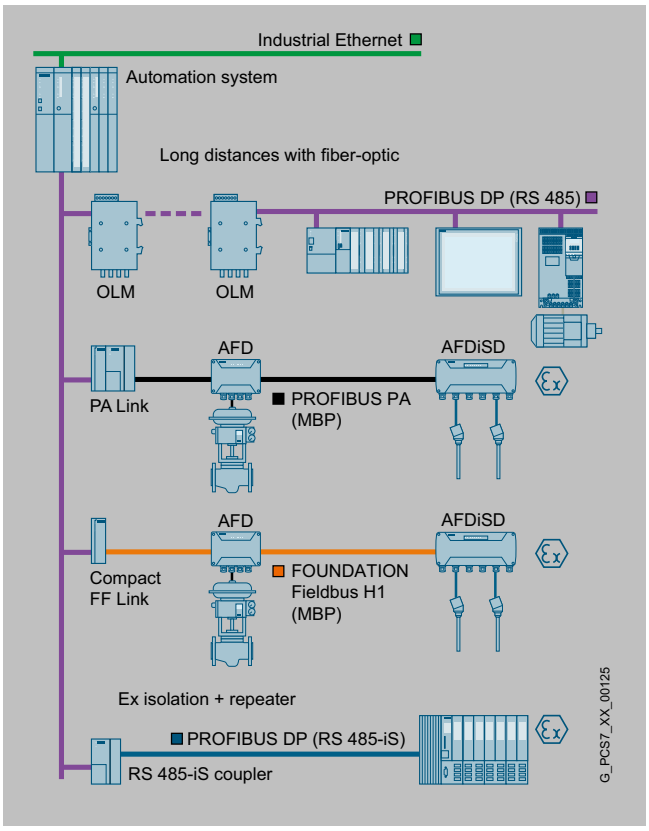

Communication at field level with PROFIBUS

Distributed peripherals such as remote I/O stations with their I/O modules, transmitters, drives, valves or operator terminals communicate with the automation systems (controllers) at field level through a powerful real-time bus system. This communication is characterized by:

- Cyclic transmission of process data
- Acyclic transfer of alarms, parameters and diagnostic data

PROFIBUS is predestined for these tasks because it enables high-speed communication with the intelligent distributed I/Os by means of a communications protocol (PROFIBUS DP) as well as communication and simultaneous power supply for transmitters and actuators (PROFIBUS PA).

PROFIBUS is simple, rugged and reliable, can be expanded online by further distributed components, and can be used in both standard environments and hazardous areas. It supports the coexistence of field devices from different vendors on one line (interoperability) as well as the vendor-independent exchangeability of devices from one profile family.

Benefits

SIMATIC PCS 7 utilizes the benefits of the PROFIBUS from start to finish:

- Small planning and engineering overheads as well as low commissioning costs
- Optimum distributed system structure with low hardware and space requirements
- Significantly reduced overheads for wiring, patching, distribution, power supply and field mounting
- High-speed communication with high measurement accuracy
- Efficient engineering, interoperability and replaceability of devices due to vendor-independent device description
- Short commissioning times due to short loop tests, simple parameter assignment and the absence of calibration work
- Bidirectional communication and high information content permit enhanced diagnostics functions for fast fault identification and elimination
- Optimum life cycle management thanks to processing and evaluation of diagnostics and status information by the maintenance station

Function

Users have numerous facilities for communication and line diagnostics, as well as for diagnostics of the intelligent field devices connected. Furthermore, the PROFIBUS is fully integrated into the global asset management with the maintenance station of the SIMATIC PCS 7 process control system.

For process automation, the following PROFIBUS functions are particularly relevant in addition:

- Integration of previously installed HART devices
- Redundancy
- Safety-related communication with PROFIsafe up to SIL 3 according to IEC 61508
- Time-of-day synchronization
- Time stamp

PROFIBUS transmission systems

PROFIBUS DP

- **RS 485**
  Simple and low-cost electrical transmission system based on shielded two-wire cable.
- **RS 485-iS**
  Intrinsically-safe electrical transmission system for hazardous areas up to Ex Zone 1 or 21, implemented using a shielded two-wire cable with a transmission rate of 1.5 Mbps.
- **Fiber-optic**
  Optical transmission system with glass or plastic fiber-optic cables, for fast transmission of large quantities of data in environments with high interferences or for covering long distances.

PROFIBUS PA

- **MBP (Manchester coded; bus powered)**
  Intrinsically-safe transmission system which permits simultaneous transmission of digital data and powering of the field devices by means of a two-wire cable. It is suitable for direct connection of devices in environments up to Ex Zone 1 or 21 and associated sensors/actuators in environments up to Ex Zone 0 or 20.

© Siemens AG 2024

Application

The PROFIBUS DP fieldbus enables the SIMATIC PCS 7 automation systems (controllers) to communicate with distributed I/Os from the ET 200 range (remote I/Os) as well as with field/process devices, CPUs/CPs and operator terminals that have a PROFIBUS DP interface. With the aid of the fieldbus isolating transformer (RS 485-iS coupler) and the RS 485-iS transmission system, PROFIBUS DP can be run as an intrinsically-safe fieldbus in all environments up to Ex Zone 1 or 21.

Controller communication with intelligent distributed devices on PROFIBUS PA, FOUNDATION Fieldbus H1 or HART I/Os is also implemented via PROFIBUS DP.

In a SIMATIC PCS 7 automation system, PROFIBUS DP lines can be connected to distributed process I/O both via a PROFIBUS DP interface in the CPU and via a CP 443-5 Extended communications module. On a PROFIBUS DP line, it is possible to operate up to 125 devices, and up to 31 devices with a PROFIBUS DP interface on one bus segment (32 nodes).

Electrical and optical transmission technologies offer many different configuration options for PROFIBUS DP networks. Electrical networks can span up to approx. 10 km. With optical transmission systems, the total size of the network is governed primarily by the cycle times as a result of the almost loss-free transmission.

With SIMATIC PCS 7, PROFIBUS DP topologies are always implemented through the standard electrical PROFIBUS DP connection on the automation system in the form of electrical or mixed (electrical/optical) networks. In the case of mixed networks, the transition between the two media is implemented by an optical link module (OLM). In regard to the communication between the nodes, there is no difference between electrical two-wire technology and fiber-optic technology.

Electrical networks can be configured with a line or tree topology. Mixed electrical/optical networks with OLMs as routers can be configured with a line, ring or star topology.

© Siemens AG 2024

Technical specifications

PROFIBUS DP			
Data transmission	**RS 485**	**RS 485-iS**	**Fiber-optic**
Transmission rate	9.6 Kbps ... 12 Mbps	9.6 Kbps ... 1.5 Mbps	9.6 Kbps ... 12 Mbps
Cable	2-wire shielded	2-wire shielded	Plastic as well as multi-mode and single-mode glass-fiber
Type of protection		EEx(ib)	
Topology	Line, tree	Line	Ring, star, linear
Nodes per segment	32	32[1)]	–
Nodes per network (with repeater)	126	126	126
Cable length per segment depending on transfer rate	1 200 m at max. 93.75 Kbps 1 000 m at 187.5 Kbps 400 m at 500 Kbps 200 m at 1.5 Mbps 100 m at 12 Mbps	1 000 m at 187.5 Kbps[1)] 400 m at 500 Kbps[1)] 200 m at 1.5 Mbps[1)]	Max. 80 m (plastic) 2 ... 3 km (multimode glass fiber) > 15 km at 12 Mbps (single-mode glass-fiber)
Repeater for signal boosting with RS 485 networks	Max. 9	Max. 9[1)]	Not relevant

[1)] According to PROFIBUS installation guideline 2.262

© Siemens AG 2024

Overview

The simple and cost-effective 2-wire RS 485 transmission system is exceptionally suitable for networks with a linear/tree structure and high data transmission rates. Shielded, twisted pair cables are used as the transmission medium. The PROFIBUS DP nodes are connected to these bus cables using bus connectors.

Design

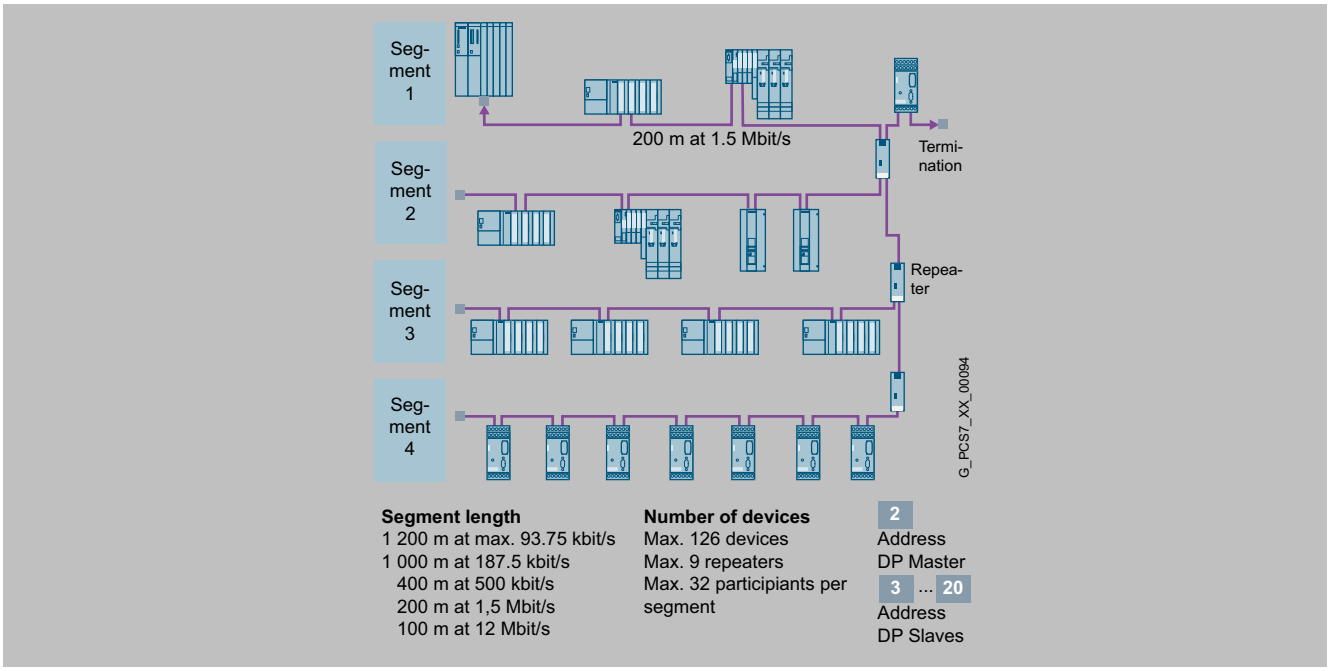

Configuration example of an electrical RS 485 network with linear/tree structure

The network size with an electrical RS 485 network is in total smaller than that with an optical network. However, by using segmenting and signal regeneration with up to 9 repeaters, distances from 1 km (at 12 Mbps) up to 10 km (at 187.5 Kbps) can be achieved depending on the transfer rate.

A segment can have up to 32 nodes (master/slaves), and the total network up to 126 nodes. The start and end of each segment must be terminated by an active bus resistor which is typically integrated in the device (e.g. repeater) or is available as an active RS 485 termination element.

In the configuration example (figure above), the individual bus nodes are assigned possible node addresses. Although repeaters are electrical nodes on the PROFIBUS, they are not assigned a station address since they are not directly addressed by the master.

FastConnect

FastConnect stripping tool

PROFIBUS FastConnect is a system for fast and easy assembly of PROFIBUS copper cables. The system comprises compatible components:

- FastConnect standard cable for fast assembly

© Siemens AG 2024

Design (continued)

- FastConnect stripping tool
  With FastConnect blade cassettes (spare blade cassettes for the stripping tool)
- FastConnect bus connector for PROFIBUS

Repeater for PROFIBUS

A repeater links the individual bus segments with RS 485 technology. Main applications are:

- Increase in number of nodes and distances
- Electrical isolation of segments

If diagnostics functions for physical cable diagnostics are desired in addition to the standard repeater functionality, a diagnostics repeater can be used as an alternative. It monitors the copper bus cables in online mode. In the event of a fault it sends a diagnostic message with detailed information about the type and location of the fault to the DP master.

Active RS 485 terminating element

The active RS 485 terminating element is used to terminate bus segments. The component supplied with 24 V DC independent of the bus nodes provides a defined RS 485 signal level, and suppresses reflections on the line. Bus nodes (e.g. ET 200S) can be coupled and decoupled without feedback to/from PROFIBUS networks terminated by active RS 485 terminating elements.

RS 485-IS coupler

The RS 485-iS coupler is an isolating transformer with which the PROFIBUS DP fieldbus can be routed intrinsically safe into the hazardous area.

The RS 485-iS coupler has the following functions:

- Connection of intrinsically safe PROFIBUS DP nodes, e.g. ET 200iSP or devices from other vendors with Ex i DP connection
- Conversion of the electrical PROFIBUS DP RS 485 transmission system into the intrinsically safe RS 485-iS transmission system with a transfer rate of 1.5 Mbps
- Suitable as a safety barrier
- Additional use as a repeater in hazardous areas

The RS 485-iS coupler as an open resource can only be used in enclosures, cabinets or rooms for electrical equipment. It is assembled on a SIMATIC S7-300 mounting rail which can be positioned horizontally or vertically.

The RS 485iS coupler is integrated into the PROFIBUS as follows:

- Connection to standard PROFIBUS DP via standard Sub-D socket (at the bottom on the RS 485-iS coupler, behind the right front door).
- Connection of PROFIBUS DP with RS 485-iS transmission system via screw terminals (at the top of the RS 485-iS coupler, behind the right front door)
- The last bus node on the intrinsically safe PROFIBUS DP segment (not further RS 485-iS couplers) must be terminated by a selectable terminating resistor using the connection plug, article number 6ES7972-0DA60-0XA0.

© Siemens AG 2024

Selection and ordering data

PROFIBUS FastConnect Standard Cable, violet Standard type with special design for fast mounting, 2-wire, shielded, cut-to-length Specify length in m Max. delivery unit 1 000 m, minimum order quantity 20 m	**6XV1830-0EH10**
Preferred lengths	
- 20 m	**6XV1830-0EN20**
- 50 m	**6XV1830-0EN50**
- 100 m	**6XV1830-0ET10**
- 200 m	**6XV1830-0ET20**
- 500 m	**6XV1830-0ET50**
- 1 000 m	**6XV1830-0EU10**
PROFIBUS FastConnect Standard Cable IS GP, blue Cable type for use in potentially explosive atmospheres, with special design for fast mounting, 2-wire, shielded, cut-to-length Specify length in m Max. delivery unit 1 000 m, minimum order quantity 20 m	**6XV1831-2A**
Further PROFIBUS cables with associated specifications	See Catalog IK PI
PROFIBUS FastConnect Stripping Tool Pre-adjusted tool for fast stripping of PROFIBUS FastConnect bus cables	**6GK1905-6AA00**
PROFIBUS FastConnect Blade Cassettes Spare blade cassettes for PROFIBUS FastConnect stripping tool, 5 units	**6GK1905-6AB00**
PROFIBUS FastConnect bus connector RS 485 with 90° cable outlet With insulation displacement 15.8 × 59 × 35.6 mm (W × H × D) Max. data transfer rate 12 Mbps	
• No programming port	**6ES7972-0BA52-0XA0**
• With programming port	**6ES7972-0BB52-0XA0**
PROFIBUS FastConnect bus connector RS 485 Plug 180 With 180° cable outlet, with insulation displacement system, for connection of PC, PG, OP	**6GK1500-0FC10**
Other bus connectors See Catalog IK PI	
RS 485 Repeater for PROFIBUS Data transfer rate max. 12 Mbps 24 V DC, IP20 enclosure	**6ES7972-0AA02-0XA0**
RS 485 Diagnostic Repeater For connection of up to 2 segments to PROFIBUS DP; with online diagnostics functions for monitoring the bus lines	**6ES7972-0AB01-0XA0**
Active RS 485 terminating element for PROFIBUS For terminating bus segments for data transfer rates from 9.6 Kbps to 12 Mbps	**6ES7972-0DA00-0AA0**
RS 485-IS Coupler Isolating transformer for connection of PROFIBUS DP segments with RS 485 and RS 485-iS transmission technologies Operating temperature -40 to +70 °C	**6ES7972-0AC80-0XA0**

Selection and ordering data (continued)

PROFIBUS connector with selectable terminating resistor For connection of IM 152 to PROFIBUS DP with RS 485-iS transmission technology	**6ES7972-0DA60-0XA0**
S7-300 mounting rails Lengths:	
• 160 mm	**6ES7390-1AB60-0AA0**
• 482 mm	**6ES7390-1AE80-0AA0**
• 530 mm	**6ES7390-1AF30-0AA0**
• 830 mm	**6ES7390-1AJ30-0AA0**
• 2 000 mm	**6ES7390-1BC00-0AA0**

Note:

For more information on electrical PROFIBUS networks as well as components and accessories, particularly cable material for special applications, refer to Catalog IK PI, "PROFIBUS" chapter, section "Network components for PROFIBUS – electrical networks".

© Siemens AG 2024

Overview

Optical networks are more expensive than electrical RS 485 networks, but are insensitive to electromagnetic interference. In addition to purely optical networks, the combination of electrical and optical networks has been established in practice, providing users with the advantages of the respective transmission technologies.

Design

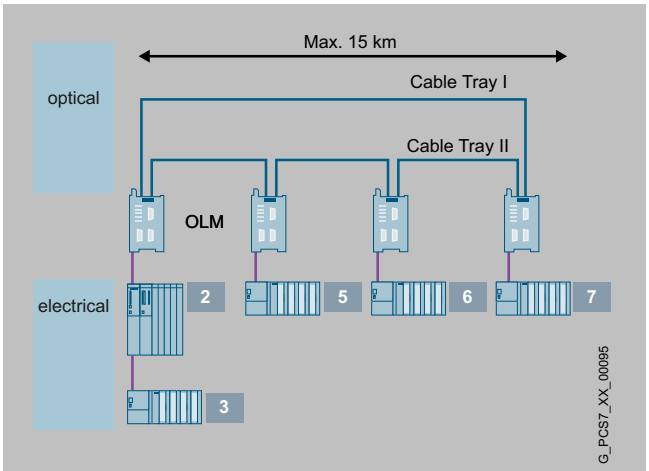

Length between 2 OLMs
Plastic: 80 m
PCF: 400 m
Glass: up to 3 km
(singlemode: 15 km)
Max. 12 Mbit/s

Number of devices
Max. 32 electrical participiants per OLM
Max. 122 OLMs per OLM Ring (depending on PROFIBUS DP bus parameters)

Configuration example of an optical ring combined with an electrical network

A fault-tolerant ring structure of the optical network prevents communication losses if the cable is damaged or disconnected at any point. Electrical bus segments are incorporated into the optical ring using up to 122 optical link modules (OLMs). Depending on the OLM and bus cable version, the distance between two OLMs can be up to 15 km. A maximum of 32 electrical bus nodes can be operated on one OLM.

The configuration example shows a typical addressing scheme with mixed transmission technologies. Although OLMs are electrical nodes within their respective segment, they are not assigned a PROFIBUS slave address.

Design (continued)

Optical Link Module OLM/G22

Optical link modules

Optical link modules (OLM) permit the construction of optical and hybrid (electrical/optical) networks in line, ring or star topologies.

OLMs can be combined with each other, and individual nodes or complete electrical segments can be integrated into the optical PROFIBUS network through an electrical interface.

OLMs are available with one (P11/G11) or two (P12/G12/G22) fiber-optic (FO) interfaces with BFOC connections. Depending on the version, they are suitable for the following distances when combined with the correspondingly specified plastic/glass fiber-optic cables:

Distance	Fiber-optic cable	OLM
Up to 80 m	POF-FOC	OLM/P11 or OLM/P12
Up to 400 m	PCF FOC	
Up to 3 km	Glass multimode FO	Depending on ambient temperature • 0 to +60 °C: OLM/G11, OLM/G12 or OLM/G22 • -25 to +60 °C: OLM/G12-EEC
Up to 15 km	Glass single-mode FO	OLM/G11-1300 or OLM/G12-1300

We recommend the OLM/G12 as the standard component for optical PROFIBUS networks both indoors and outdoors.

The OLMs have a compact metal enclosure suitable for DIN rail assembly. They automatically recognize all PROFIBUS data transfer rates. Faults can be rapidly located as follows:

- Display of module status via floating signaling contact
- Checking of FO link quality (loss per section) via test output for optical receivers for logging and plausibility checks

For more information and detailed technical specifications on the various OLM versions, see Catalog IK PI, chapter "PROFIBUS", section "Network components for PROFIBUS - Optical networks with OLM".

Bus cables

Suitable for the OLM/G12, fiber-optic cables (FOC) made of glass with 2 multimode fibers are preferred for optical PROFIBUS networks both indoors and outdoors.

The standard FIBER OPTIC CABLE is available in fixed lengths up to 2 000 m. It is pre-assembled with 4 BFOC connectors. A BFOC connector set with 20 connectors is available as an accessory.

Further fiber-optic cables as well as detailed technical specifications can be found in the IK PI Catalog, chapter "PROFIBUS", section "Network components for PROFIBUS - Optical networks".

© Siemens AG 2024

Selection and ordering data

FIBER OPTIC CABLE **Standard glass FO cable, splittable** Pre-assembled with 4 BFOC connectors	
Preferred lengths	
• 1 m	**6XV1820-5BH10**
• 5 m	**6XV1820-5BH50**
• 10 m	**6XV1820-5BN10**
• 20 m	**6XV1820-5BN20**
• 50 m	**6XV1820-5BN50**
• 100 m	**6XV1820-5BT10**
Other lengths and cables	See Catalog IK PI
BFOC Connector Set[1)] For standard and trailing FIBER OPTIC CABLES, 20 units	**6GK1901-0DA20-0AA0**
PROFIBUS OLM/P11 V4.1 Optical Link Module with one RS 485 port and one plastic FOC port (2 BFOC sockets), with signaling contact and measuring output	**6GK1503-2CA01**
PROFIBUS OLM/P12 V4.1 Optical Link Module with one RS 485 port and two plastic FOC ports (4 BFOC sockets), with signaling contact and measuring output	**6GK1503-3CA01**
PROFIBUS OLM/G11 V4.0 Optical Link Module with one RS 485 and one glass FOC port (2 BFOC sockets), for standard distances up to 3 000 m, with signaling contact and measuring output	**6GK1503-2CB00**
PROFIBUS OLM/G12 V4.0 Optical Link Module with one RS 485 port and two glass FOC ports (4 BFOC sockets), for standard distances up to 3 km, with signaling contact and measuring output	**6GK1503-3CB00**
PROFIBUS OLM/G22 V4.0 Optical Link Module with two RS 485 ports and two glass FOC ports (4 BFOC sockets), for standard distances up to 3 km, with signaling contact and measuring output	**6GK1503-4CB00**
PROFIBUS OLM/G12-EEC V4.0 Optical Link Module with one RS 485 port and two glass FOC ports (4 BFOC sockets), for standard distances up to 3 km, suitable for extended temperature range from -25 to +60 °C, with signaling contact and measuring output	**6GK1503-3CD00**
PROFIBUS OLM/G11-1300 V4.0 Optical Link Module with one RS 485 port and one glass FOC port (2 BFOC sockets), 1 300 nm wavelength for long distances up to 15 km, with signaling contact and measuring output	**6GK1503-2CC00**
PROFIBUS OLM/G12-1300 V4.0 Optical Link Module with one RS 485 port and two glass FOC ports (4 BFOC sockets), 1 300 nm wavelength for long distances up to 15 km, with signaling contact and measuring output	**6GK1503-3CC00**

1) You can order supplementary components for the SIMATIC NET cabling range from your local contact person. Technical support on this subject is available from: Siemens AG, SPG Industrial Network and Components, Fürth J. Hertlein Tel.: +49 911 750-4465 Email:

© Siemens AG 2024

Overview

In a SIMATIC PCS 7 automation system, PROFIBUS DP lines can be connected to distributed process I/O both via a PROFIBUS DP interface in the CPU and via a CP 443 5 Extended communications module.

If a module slot provided in the CPU for the PROFIBUS connection is still empty, an IF 964-DP interface module is required in addition.

With the AS 410 modular automation systems, an additional layer is applied to the PCB of CPU 410-5H Process Automation (conformal coating). To match the AS 410, a CP 443-5 Extended in the conformal coating version is therefore preferred (component of the AS bundle configuration).

For information on the type and number of configurable PROFIBUS DP interfaces, see chapter "Automation systems".

Benefits

Advantages of the CP 443-5 Extended communications module:

- Compact design; 9-pin Sub-D socket for connection to PROFIBUS DP
- Simple installation
  Can be plugged into AS rack slot; connection to the other S7-400 modules via backplane bus
- Operation without fan; backup battery or memory submodule are not required
- With additional PBC coating option (conformal coating)

Selection and ordering data

SIMATIC NET CP 443-5 Extended Communications module for connection of SIMATIC S7-400 to PROFIBUS as DP master or for S7 communication, for increasing the number of DP lines, for data set routing with SIMATIC PDM and for 10-ms time stamping, electronic manual on CD; module occupies 1 slot	**6GK7443-5DX05-0XE0**
IF 964-DP Interface module for connection of another PROFIBUS DP line, for plugging into a free DP module slot of the CPU	**6ES7964-2AA04-0AB0**

© Siemens AG 2024

Overview

The Y-Link is a bus coupler for transition from a redundant PROFIBUS DP master system to a simple, single-channel PROFIBUS DP master system. It can be used to connect devices with only one PROFIBUS DP interface to the redundant PROFIBUS DP master system.

More information IE/PB-Link HA (6GK1 411-5BB00) is recommended to connect devices with only one PROFIBUS DP interface to PROFINET.

https://mall.industry.siemens.com/mall/en/en/Catalog/Products/10398098?tree=CatalogTree

Design

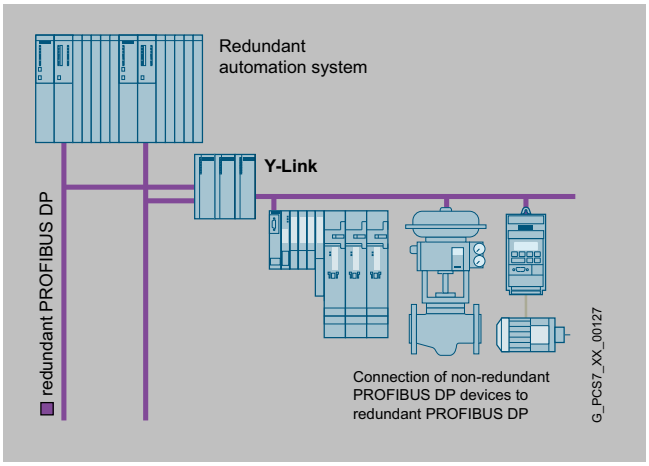

The Y-link comprises:

- 2 IM 153-2 High Feature Outdoor interface modules
- 1 Y-coupler including RS 485 repeater
- 1 BM IM/IM bus module for 2 IM 153-2 High Feature Outdoor modules
- 1 BM Y-coupler bus module

Evaluation of the Y-link diagnostics (and hence indirectly of the connected DP standard slaves) is supported by driver blocks.

It is recommendable to have a redundant -24 V DC supply for the Y-link, e.g. with two PS 307/PS 305 load power supplies.

Selection and ordering data

Y-Link For connection of devices with only one PROFIBUS DP interface to a redundant automation system, comprising: • 2 IM 153-2 High Feature Outdoor interface modules • 1 Y-coupler • 1 BM IM/IM bus module • 1 BM Y-coupler bus module	**6ES7197-1LA12-0XA0**
PS 307 load current supply Including connecting comb; 120/230 V AC; 24 V DC	
• 2 A; 40 mm wide	**6ES7307-1BA01-0AA0**
• 5 A; 60 mm wide	**6ES7307-1EA01-0AA0**
• 5 A, extended temperature range; 80 mm wide	**6ES7307-1EA80-0AA0**
• 10 A, 80 mm wide	**6ES7307-1KA02-0AA0**
PS 305 Load Power Supply 24/48/60/110 V DC; 24 V DC	
• 2 A, extended temperature range; 80 mm wide	**6ES7305-1BA80-0AA0**

© Siemens AG 2024

Overview

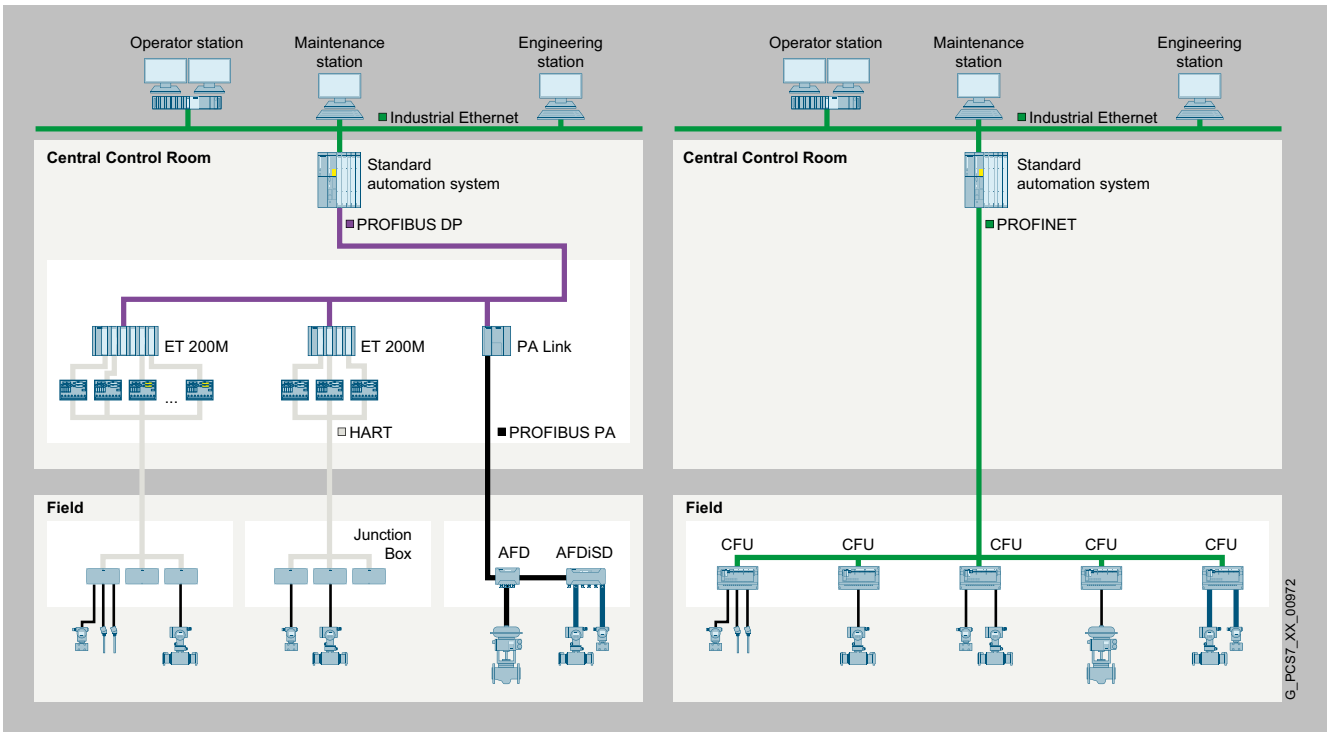

SIMATIC CFU, Field device connection

Direct interfacing of the devices in the field, especially in the hazardous area, together with the information content of the communication, are of significant importance in the process industry. PROFIBUS PA, which permits both digital data transmission and the power supply on a two-wire line with the intrinsically safe MBP transmission system (Manchester Coded; bus powered) is tailored to these requirements. It is optimally suitable for direct integration of solenoid valves, sensors, and pneumatic actuators positioned in operating environments up to hazardous zone 1/21 or 0/20 into the process control system.

The typical response time of a transmitter of approx. 10 ms indicates that short cycle times can be achieved with the PROFIBUS PA. Practically all typical applications of the process industry can be implemented, both in small and large plants. Bidirectional communication and high information content allow enhanced diagnostics for fast and exact fault detection and elimination. The standardized communications services guarantee interoperability and replaceability between multi-vendor field devices and remote parameterization of the field devices during operation.

Gateway PROFIBUS PA to PROFINET

The SIMATIC Compact Field Unit (CFU) is recommended for the gateway from PROFIBUS PA to PROFINET. The CFU is changing the existing rules for field device connection and is opening up new perspectives in terms of simplicity and flexibility. The compact field distributor is installed at the process level and is connected via PROFINET directly to the process control system to form the foundation for digitalization in the field. The CFA PA variants described in the section "Gateways to PROFINET" can be used for the configuration.

Gateway PROFIBUS PA to PROFIBUS DP

The PA link is preferred as the gateway from PROFIBUS PA to PROFIBUS DP. When using the PA link, the transfer rate on the PROFIBUS DP is independent of the lower-level PROFIBUS PA segments. The configuration of the PA link depends on the fieldbus architecture. The types of coupler described in the section "Gateways to PROFIBUS PA" can be used for the configuration. With a small amount of data (small quantity framework) and low timing requirements, the DP/PA coupler can also be operated in standalone mode as a gateway.

© Siemens AG 2024

Benefits

The advantages of distributed field automation and the use of the PROFIBUS PA profile include low hardware overheads, cost-effective engineering, increased operational safety and problem-free maintenance. These advantages are underlined by the following features:

- Modularity and uniformity from the sensor up to the control level enable new plant designs
- Implementation of intrinsically-safe applications through use of the fieldbus in hazardous areas
- Redundant PROFIBUS PA architectures from the automation system (controller) down to a PA field device
- Safety-related and fault-tolerant applications with low device and cabling requirements
- Reduced configuration costs through simple, central engineering of the field devices (PROFIBUS PA and HART with SIMATIC PDM, also cross-vendor)
- Simple installation using two-wire line for common power supply and data transmission
- Reduced commissioning costs through simplified loop check
- Low servicing costs thanks to simple wiring and comprehensive diagnostics capabilities

© Siemens AG 2024

Overview

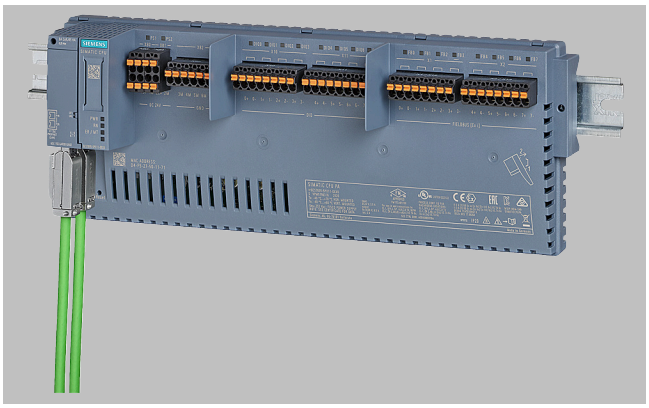

CFU PA with RJ45 and push-in terminals with cable

SIMATIC CFU PA edition

Plug-and-produce simplicity

Digitalization requires integrated digital communication right down to the sensors and actuators. This can be achieved using the tried-and-tested standard PROFIBUS PA. This is integrated in the PA edition of the SIMATIC CFU, thus combining ruggedness and easy handling with all the advantages of the PROFINET standard based on Industrial Ethernet. Connected devices are automatically addressed. The device is integrated via standardized communication profiles.

This innovative new implementation of the PROFIBUS PA concept makes it possible to combine the simplicity of a point-to-point wiring system with the scalability of digital PROFIBUS PA fieldbus communication. As with digital field devices, it is not necessary to know prior to connection whether the discrete field device is a sensor or actuator. This can easily be configured afterwards with software.

Combination of digital fieldbus and discrete I/Os

- 8 × digital fieldbus (PROFIBUS PA)
- 8 × digital inputs/outputs, freely configurable (1 x counter functionality / frequency measurement)

Easy to use

- Automatic addressing of PROFIBUS PA field devices
- System-supported detection and integration of PROFIBUS PA field devices into the process control system
  - Use of standardized PA profiles
  - Commissioning, device exchange and maintenance wizards
- Implementation of diagnostic messages according to NAMUR NE 107
- Installation on a 35 mm DIN rail

Overview (continued)

Aluminum field enclosure

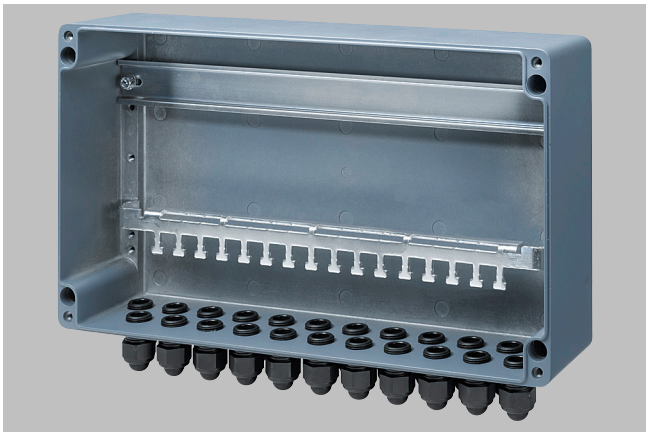

SIMATIC CFU aluminum field enclosure, open

SIMATIC CFU aluminum field enclosure, closed

The die-cast aluminum enclosure is suitable for use in zone 2/22 hazardous areas. The following are included in the enclosure's scope of delivery:

- 22 × M20 plastic cable glands (including blanking plugs)
- 35 mm DIN rail
- Rail for strain relief and shield support

The enclosure has a window for LED diagnostics.

If FM approval is required, a separate version of the enclosure can be purchased (SIMATIC CFU FM aluminum field enclosure).

© Siemens AG 2024

Selection and ordering data

SIMATIC CFU PA bundle with push-in terminals Comprising: • SIMATIC CFU PA, article no. 6ES7655-5PX11-0XX0 • SIMATIC CFU push-in terminals, article no. 6ES7655-5PX00-1XX0 pre-assembled and tested	**6ES7655-5PX11-1XX0**
SIMATIC CFU PA bundle with aluminum enclosure Comprising: • SIMATIC CFU PA, article no. 6ES7655-5PX11-0XX0 • SIMATIC CFU push-in terminals, article no. 6ES7655-5PX00-1XX0 • Aluminum enclosure with cable glands, shield busbar, shield terminals pre-assembled and tested	**6ES7655-5PX11-1AX0**

© Siemens AG 2024

Technical specifications

Article number	6ES7655-5PX11-1XX0	6ES7655-5PX11-1AX0
General information		
Product type designation	PA Bundle	
Number of channels	16	
• Product function		
• I&M data	Yes; I&M0 to I&M4	
• Isochronous mode	No	
• The user can configure digital channels as input/output as required	Yes	
• Digital channels can be parameterized	Yes	
• Engineering with		
• STEP 7 TIA Portal configurable/integrated from version	V17	
• STEP 7 configurable/integrated from version	V5.6 HF2 and higher	
• PCS 7 configurable/integrated from version	V9.0 SP2 and higher	
• PCS neo can be configured/integrated from version	V3.0	
• PROFIBUS from GSD version/GSD revision	- / -	
• PROFINET from GSD version/GSD revision	GSDML V2.3	
• Operating mode		
• Counter	Yes	
Installation type/mounting		
Mounting	on 35 mm DIN rail, 2 spacing units wide	
Mounting position	Horizontal, vertical	Horizontal, vertical
Recommended mounting position		horizontal set up
Supply voltage		
Type of supply voltage	24 V DC	
Rated value (DC)	24 V	
Reverse polarity protection	Yes	
Short-circuit protection	Yes	
Redundant power supply	Yes	
• Mains buffering		
• Mains/voltage failure stored energy time	5 ms; Bridging for field devices and communication	
Input current		
Current consumption (rated value)	2.5 A	
Current consumption, max.	2.55 A	
Inrush current, max.	8 A	
I^2t	0.3 $A^2 \cdot s$	
Encoder supply		
Number of outputs	8	
Output voltage, min.	18.2 V	
Short-circuit protection	Yes; Electronic	
• Output current		
• up to 60 °C, max.	2 A	
• up to 70 °C, max.	1 A	
Power loss		
Power loss, typ.	8.2 W; Depending on the type of BusAdapter used (typ. RJ45)	
Address area		
• Address space per station		
• Address space per station, max.	1 440 byte; Dependent on configuration	
Digital inputs		
Number of digital inputs	8	
Source/sink input	Yes; P-reading	

© Siemens AG 2024

Technical specifications (continued)

Article number	6ES7655-5PX11-1XX0	6ES7655-5PX11-1AX0
Input characteristic curve in accordance with IEC 61131, type 1	Yes	
Input characteristic curve in accordance with IEC 61131, type 2	No	
Input characteristic curve in accordance with IEC 61131, type 3	Yes	
Pulse extension	No	
• Number of simultaneously controllable inputs		
• horizontal installation		
• up to 60 °C, max.	8; Total current must be observed, see DQ	
• up to 70 °C, max.	8; Total current must be observed, see DQ	
• vertical installation		
• up to 60 °C, max.	8; Total current must be observed, see DQ	
• Digital input functions, parameterizable		
• Counter	Yes	
• Number, max.	1	
• Counting frequency, max.	1 kHz	
• Counting width	32 bit	
• Counting direction up/down	Yes; Up	
• Input voltage		
• Rated value (DC)	24 V	
• for signal "0"	-30 to +5 V	
• for signal "1"	+11 to +30V	
• Input current		
• for signal "1", typ.	2.5 mA; Typical	
• Input delay (for rated value of input voltage)		
• for standard inputs		
• parameterizable	No	
• at "0" to "1", max.	3.2 ms; for counter function 0,1 ms	
• at "1" to "0", max.	3.2 ms; for counter function 0,1 ms	
• Cable length		
• shielded, max.	1 000 m	
• unshielded, max.	600 m	
Digital outputs		
Type of digital output	Transistor	
Number of digital outputs	8	
Current-sinking	No	
Current-sourcing	Yes	
Short-circuit protection	Yes	
• Response threshold, typ.	0.7 to 1.3 A	
Limitation of inductive shutdown voltage to	Typ. L+ (-50 V)	
Controlling a digital input	Yes	
• Switching capacity of the outputs		
• on lamp load, max.	5 W	
• Load resistance range		
• lower limit	48 Ω	
• upper limit	12 kΩ	
• Output voltage		
• Type of output voltage	DC	
• for signal "1", min.	Ue minus 1 V	
• Output current		
• for signal "1" rated value	0.5 A	
• for signal "0" residual current, max.	0.1 mA	

© Siemens AG 2024

Technical specifications (continued)

Article number	6ES7655-5PX11-1XX0	6ES7655-5PX11-1AX0
• Output delay with resistive load		
• "0" to "1", max.	50 µs	
• "1" to "0", max.	100 µs	
• Parallel switching of two outputs		
• for uprating	No	
• for redundant control of a load	No	
• Switching frequency		
• with resistive load, max.	100 Hz	
• with inductive load, max.	2 Hz	
• on lamp load, max.	10 Hz	
• Total current of the outputs		
• Current per channel, max.	0.5 A	
• horizontal installation		
• up to 60 °C, max.	2 A	
• up to 70 °C, max.	1 A	
• vertical installation		
• up to 60 °C, max.	2 A	
• Cable length		
• shielded, max.	1 000 m	
• unshielded, max.	600 m	
Encoder		
• Connectable encoders		
• 2-wire sensor	Yes	
• permissible quiescent current (2-wire sensor), max.	1.5 mA	
Interfaces		
Number of PROFINET interfaces	1	
Number of PROFIBUS interfaces	0	
• PROFIBUS PA		
• Transmission rate, max.	31.25 kbit/s	
• Number of connectable PA field devices	8; electrically isolated from other interfaces, isolation tested at 2 500 V DC	
• Current output to PA field devices, max.	320 mA	
• permissible current per spur line	40 mA	
• Automatic addressing	Yes	
• System-supported integration of field devices via PA profiles	Yes	
• Extended fieldbus diagnostics	Yes	
1. Interface		
Interface type	PROFINET	
Isolated	Yes	
• Interface types		
• Number of ports	2	
• integrated switch	Yes	
• BusAdapter (PROFINET)	Yes	
• Protocols		
• PROFINET IO Device	Yes	
• PROFIBUS DP slave	No	
Interface types		
• RJ 45 (Ethernet)		
• 100 Mbps	Yes	
• Autonegotiation	Yes	

© Siemens AG 2024

Technical specifications (continued)

Article number	6ES7655-5PX11-1XX0	6ES7655-5PX11-1AX0
• Autocrossing	Yes	
Protocols		
Supports protocol for PROFINET IO	Yes	
• Redundancy mode		
• PROFINET system redundancy (S2)	Yes; Type S2	
• Media redundancy		
• MRP	Yes	
• Open IE communication		
• LLDP	Yes	
Interrupts/diagnostics/status information		
Status indicator	Yes	
Alarms	Yes	
Diagnostics function	Yes	
• Diagnoses		
• Monitoring of encoder power supply	Yes	
• Wire-break	Yes	
• Short-circuit	Yes	
• Diagnostics indication LED		
• RUN LED	Yes; green LED	
• ERROR LED	Yes; red LED	
• MAINT LED	Yes; Yellow LED	
• Monitoring of the supply voltage (PWR-LED)	Yes	
• Status indicator digital input (green)	Yes	
• Status indicator digital output (green)	Yes	
• Spur line status/fault	Yes	
Potential separation		
between the channels and PROFINET	Yes	
• Potential separation digital inputs		
• between the channels	No	
• between the channels and the power supply of the electronics	No	
• Potential separation digital outputs		
• between the channels	No	
• between the channels and the power supply of the electronics	No	
Degree and class of protection		
IP degree of protection	IP20	IP66
Ambient conditions		
• Ambient temperature during operation		
• min.	-40 °C	
• max.	70 °C	
connection method / header		
Design of electrical connection	Connection plug	
• connection method / spur line / header		
• Number of spur lines	8	
• Type of cable	Type A	
• Cable diameter, min.	6 mm	
• Cable diameter, max.	12 mm	
• Conductor cross-section, min.	0.2 mm²	
• Conductor cross-section, max.	2.5 mm²	
• Cable length, max.	120 m	
• total current output to field devices, max.	320 mA	

© Siemens AG 2024

Technical specifications (continued)

Article number	6ES7655-5PX11-1XX0	6ES7655-5PX11-1AX0
• Number of connectable field devices	8	
• Current limitation per field device, max.	40 mA	
• No-load voltage, max.	15.3 V	
• short-circuit proof	Yes	
• Short-circuit current (test current); max.	8 mA	
• intrinsically safe according to FISCO model	Yes	
• Debounce logic	Yes	
Dimensions		
Width	329 mm	414 mm
Height	123 mm	266 mm
Depth	74 mm	111 mm
Weights		
Weight, approx.	650 g	5.5 kg

© Siemens AG 2024

Overview

PA link, consisting here of IM 153-2 High Feature Outdoor and DP/PA coupler

To create a smooth gateway between PROFIBUS DP and PROFIBUS PA, the SIMATIC product range offers two variants: the DP/PA coupler and the PA link.

The following criteria can be applied when choosing the gateway:

- DP/PA coupler:

  For small quantity frameworks (volumes of data) and low timing requirements; data transfer rate on the PROFIBUS DP limited to 45.45 Kbps

- PA link:

  For large number of nodes and high cycle time requirements; data transfer rate on the PROFIBUS DP up to 12 Mbps

Application

The two PA gateways are based on two variants of the DP/PA coupler:

- Ex [i] DP/PA coupler (max. output current 110 mA)

  For implementation of PROFIBUS PA networks with a line or tree topology in environments up to Ex Zone 1/21; not for redundant architectures (coupler redundancy, ring)

- DP/PA coupler FDC 157-0 (max. output current 1 000 mA)

  For implementation of PROFIBUS PA networks with a line, tree or ring topology in environments up to Ex Zone 2/22; can be used for the "Ring" and "Line with coupler redundancy" redundant architectures.

DP/PA couplers are also integral components of the PA link (see design). The PA link connects PROFIBUS DP and PROFIBUS PA together, and decouples the transfer rates. In contrast to the DP/PA coupler gateway which limits the data transfer rate on the PROFIBUS DP to 45.45 Kbps, the PA link does not influence the performance of the PROFIBUS DP.

The PA link functions as a slave on the PROFIBUS DP and as a master on the PROFIBUS PA. From the viewpoint of the host PROFIBUS DP master, the PA link is a modular slave whose modules are the devices connected on the PROFIBUS PA. Addressing of these devices is carried out indirectly via the PA link that itself only requires one node address. The host PROFIBUS master can scan devices connected to the PA link all at once.

If the gateway is a DP/PA coupler, the nodes on the PROFIBUS PA are directly addressed by the PROFIBUS DP master (controller). The DP/PA coupler is an electrical node, but is transparent for communication between the master and PA field devices; it therefore does not require setting of parameters or addresses (exception: FDC 157-0 DP/PA coupler used as PROFIBUS diagnostics slave).

PROFIBUS diagnostics with FDC 157-0 DP/PA coupler, configured as PROFIBUS diagnostics slave

FDC 157-0 DP/PA couplers configured as PROFIBUS diagnostics slaves supply extensive diagnostic and status information via PROFIBUS for swift localization and correction of faults:

- I&M (Identification & Maintenance) data
- Current and voltage values on the main line
- Redundancy status
- Wire break
- Short-circuit
- Signal level

To this end, each of these DP/PA couplers FDC 157-0 requires its own PROFIBUS address. This applies independent of use in a PA link or as a PA gateway.

The PA link and DP/PA coupler are available for use in operating environments up to Ex Zone 2/22. Both are operated with 24 V DC. Assembly is on an S7-300 mounting rail with horizontal or vertical alignment.

© Siemens AG 2024

Design

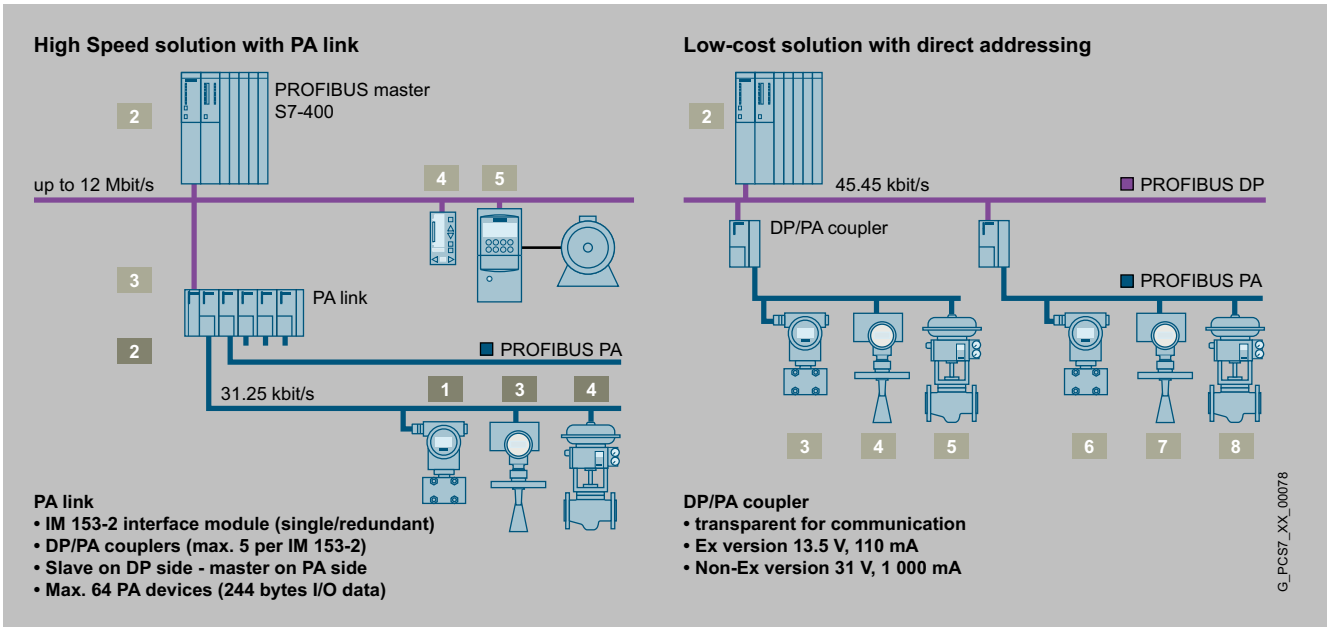

Configuration examples for PA link and DP/PA coupler

PA link

The PA link is a modular combination in S7-300 design consisting of the IM 153-2 High Feature Outdoor PROFIBUS DP interface module (with optional redundancy) and up to 5 DP/PA couplers (FDC 157-0 or Ex [i]).

All components of the PA link are interconnected through the S7 backplane bus. Use of active bus modules on the backplane allows hot swapping of individual modules and redundancy of the IM 153-2 High Feature Outdoor PROFIBUS DP interface modules and the FDC 157-0 DP/PA couplers. If redundancy and changes during operation are not required, passive bus connectors can be used instead of active bus modules.

The PS 307 or PS 305 load current supply can be used for the 24 V DC. With a redundant IM 153-2 High Feature Outdoor PROFIBUS DP interface module, a redundant 24 V DC supply is also recommended, e.g. using two PS 307/PS 305 load current supplies.

The PROFIBUS PA bus segments designed with the DP/PA couplers are physically separated as regards current infeed, but form one bus system in communication terms. A PROFIBUS PA ring segment or a PROFIBUS PA line segment with coupler redundancy can be operated on a PA link. Further PROFIBUS PA line segments can be operated on this PA link using individual couplers. The FDC 157-0 DP/PA couplers provided for the ring coupling or coupler redundancy must always be located at the right-hand end of a sequence of up to 5 couplers.

The following basic components are available for configuring the PA link:

- IM 153-2 High Feature Outdoor interface
- DP/PA coupler (Ex [i] and FDC 157-0)
- Components for redundant design and for hot swapping:
  - Mounting rail for hot swapping (as an alternative to the standard mounting rail)
  - BM PS/IM for 1 load current supply and 1 IM 153-2 High Feature Outdoor module
  - BM IM/IM for 2 IM 153-2 High Feature Outdoor modules, for redundant and non-redundant configuration
  - BM FDC for 1 DP/PA coupler Ex [i] or FDC 157-0 (up to 5 DP/PA couplers possible per PA link)
  - BM FDC/FDC for 2 DP/PA couplers FDC 157-0

Additive options:

- PS 307 for 120/230 V AC; 24 V DC load current supply, version in 2, 5 or 10 A, or
- PS 305 load current supply for 24/48/60/110 V DC; 24 V DC, 2 A

© Siemens AG 2024

Selection and ordering data

DP/PA coupler For transition from RS 485 to MBP	
• DP/PA coupler Ex [i] Fieldbus coupler between PROFIBUS DP and PROFIBUS PA, EEx(ia) version, max. output current 110 mA; degree of protection IP20; permissible operating temperature 25 to +60 °C	**6ES7157-0AD82-0XA0**
• DP/PA coupler FDC 157-0 Fieldbus coupler between PROFIBUS DP and PROFIBUS PA, redundancy capable; integrated PROFIBUS diagnostics slave; max. output current 1 A; IP20 degree of protection; permissible operating temperature -25 to +60 °C	**6ES7157-0AC85-0XA0**
IM 153-2 High Feature Outdoor Interface module for PROFIBUS DP for ET 200M, PA link and Y link; redundancy capable; conformal coating, IP20 degree of protection; permissible operating temperature -25 to +60 °C	**6ES7153-2BA70-0XB0**
Accessories	
PS 307 load current supply Including connecting comb; 120/230 V AC; 24 V DC	
• 2 A; 40 mm wide	**6ES7307-1BA01-0AA0**
• 5 A; 60 mm wide	**6ES7307-1EA01-0AA0**
• 5 A, extended temperature range; 80 mm wide	**6ES7307-1EA80-0AA0**
• 10 A, 80 mm wide	**6ES7307-1KA02-0AA0**
PS 305 load current supply 24/48/60/110 V DC; 24 V DC	
• 2 A, extended temperature range; 80 mm wide	**6ES7305-1BA80-0AA0**
Standard mounting rails (without hot swapping function)	
• Width 482 mm (19")	**6ES7390-1AE80-0AA0**
• Width 530 mm	**6ES7390-1AF30-0AA0**
Components for hot swap and for redundant configuration	
Active bus modules for hot swapping	
• BM PS/IM SIPLUS extreme For 1 load current supply and 1 IM 153-2 High Feature module; for hot swap function, permissible operating temperature -25 to +70 °C	**6AG1195-7HA00-2XA0**
• BM IM/IM For 2 IM 153-2 High Feature modules, for redundant and non-redundant configuration, for hot swap function, permissible operating temperature -25 to +60 °C	**6ES7195-7HD80-0XA0**
• BM FDC For 1 DP/PA coupler Ex [i] or FDC 157-0, for hot swap function, permissible operating temperature -25 to +60 °C	**6ES7195-7HF80-0XA0**
• BM FDC/FDC For 2 DP/PA couplers FDC 157-0, for hot swap function, permissible operating temperature -25 to +60 °C	**6ES7195-7HG80-0XA0**

Selection and ordering data (continued)

Mounting rail for hot swapping For max. 5 active bus modules	
• Width 482 mm (19")	**6ES7195-1GA00-0XA0**
• Width 530 mm	**6ES7195-1GF30-0XA0**
• Width 620 mm	**6ES7195-1GG30-0XA0**
Covers 4 backplane bus covers and 1 cover for active bus module	**6ES7195-1JA00-0XA0**

Technical specifications

DP/PA Coupler	
Bus connection	
Connection for PROFIBUS PA	
• DP/PA coupler Ex [i]	2 terminals of a 4-pin screw-type terminal, integrated terminating resistor
• DP/PA coupler FDC 157-0	4-pin screw-type terminal for connection and looping through, selectable terminating resistor
Connection for PROFIBUS DP	9-pin D-sub connector Contact assignment as described in IEC 61158/EN 50170
Module-specific data	
Degree of protection	IP20
Transmission rate	
• On PROFIBUS DP	45.45 Kbps
• On PROFIBUS PA	31.25 Kbps
Communication protocol	PROFIBUS DP
Voltages, currents, potentials	
Supply voltage	24 V DC (20.4 ... 28.8 V)
Reverse polarity protection	Yes
Overvoltage protection	Yes
Voltage at coupler output (PA)	
• DP/PA coupler Ex [i]	13 ... 14 V DC
• DP/PA coupler FDC 157-0	31 ± 1 V DC
Voltage monitoring	15.5 V
Overvoltage monitoring	U > 35 V; latching cutoff
Voltage failure bridging	Min. 5 ms
Current at coupler output (PA) for supplying the PA field devices	
• DP/PA coupler Ex [i]	Max. 110 mA
• DP/PA coupler FDC 157-0	Max. 1 A
Galvanic isolation 24 V DC	
• PROFIBUS DP/PROFIBUS PA	Yes
• PROFIBUS DP/supply	Yes
• PROFIBUS PA/supply	Yes
• All electric circuits/functional grounding	Yes
Power consumption of modules (24 V DC)	
• DP/PA coupler Ex [i]	Max. 400 mA
• DP/PA coupler FDC 157-0	Max. 2.3 A
Module power loss	
• DP/PA coupler Ex [i]	Typ. 7 W
• DP/PA coupler FDC 157-0	Typ. 13.4 W
Status, interrupts, diagnostics	
Diagnostics displays DP/PA coupler Ex [i] and DP/PA coupler FDC 157-0	
• PROFIBUS DP bus monitoring	Yellow "DP" LED

© Siemens AG 2024

Technical specifications (continued)

• PROFIBUS PA bus monitoring	Yellow "PA" LED
• 24 V DC power supply monitoring	Green "ON" LED
Additive diagnostics displays of the DP/PA coupler FDC 157-0	
• Group error	Red LED "SF"
• Bus error	Red LED "BF"
• Monitoring DP/PA coupler (active coupler in redundant configuration)	Yellow "ACT" LED
Climatic conditions	
Permissible operating temperature DP/PA coupler Ex [i] and DP/PA coupler FDC 157-0	
• Horizontal installation	-25 to +60 °C
• Vertical installation	-25 to +40 °C
Dimensions and weight	
Dimensions (W × H × D) in mm	80 × 125 × 130
Weight	
• DP/PA coupler Ex [i]	Approx. 550 g
• DP/PA coupler FDC 157-0	Approx. 515 g

IM 153-2 High Feature Outdoor	
Bus connection	
• Connection for PROFIBUS DP	9-pin D-sub connector, contact assignment as described in IEC 61158/EN 50170, Vol. 2
Connectable lower-level components	
Number of couplers	
• DP/PA coupler	Max. 5
• Y coupler	1
Number of PA devices on PROFIBUS PA	Max. 64
Module-specific data	
Degree of protection	IP20
Transmission rate of the higher level DP master system	9.6; 19.2; 45.45; 93.75; 187.5; 500 Kbps 1.5; 3; 6; 12 Mbps
Communication protocol	PROFIBUS DP
Frame length	
• I/O data	Max. 244 bytes
• Configuration frame	Max. 244 bytes
• Diagnostics frame	Max. 244 bytes
• Parameter assignment frame	Max. 244 bytes
Voltages, currents, potentials	
Supply voltage	24 V DC (20.4 ... 28.8 V)
Reverse polarity protection	Yes
Voltage failure bridging	20 ms
Galvanic isolation	
• To the higher-level DP master system	Yes
• To the DP/PA coupler or Y coupler	No
Power consumption of modules (24 V DC)	
• In the PA link	Max. 200 mA (at 20.4 V)
• In the Y link	Max. 400 mA (at 20.4 V)
Module power loss	
• In the PA link	Max. 2.6 W (at 28.8 V)
• In the Y link	Max. 3.6 W (at 28.8 V)
Infeed, mechanical design	4-pin screw terminal, short-circuiting link between PE and M24; the short-circuiting link must be removed for floating operation (independent of this, the DP interface is always floating)

Technical specifications (continued)

Status, interrupts, diagnostics	
Diagnostic displays	
• Group error	Red LED "SF"
• Bus error on higher level DP master system	Red LED "BF 1"
• Bus error on underlying bus system	Red LED "BF 2"
• Module is active in redundancy mode	Yellow "ACT" LED
• 24 V DC power supply monitoring	Green "ON" LED
Climatic conditions	
Permissible operating temperature	
• Horizontal installation	-25 to +60 °C
• Vertical installation	-25 to +40 °C
Dimensions and weight	
Dimensions (W × H × D) in mm	40 × 125 × 130
Weight	Approx. 360 g

© Siemens AG 2024

Overview

Active field distributor AFD4

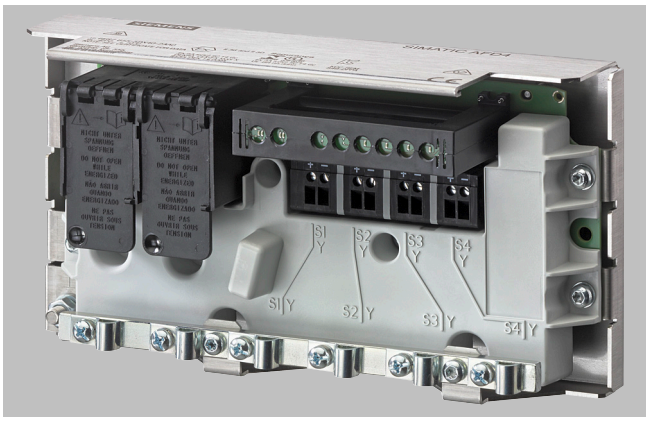

Active field distributor AFD4 RAILMOUNT

Active field distributor AFD8

Active field distributor AFD

Active field distributors (AFD) can be operated in environments in accordance with Division 2, Zone 2 or Zone 22. The following versions are available:

- AFD4, AFD4 RAILMOUNT and AFD4 FM, with 4 spur line connections for 1 field device each
- AFD8 with 8 spur line connections for 1 field device each

Overview (continued)

An AFD4, AFD4 RAILMOUNT and AFD4 FM can therefore connect up to 4 field devices, and an AFD8 can connect up to 8 standard-compliant PROFIBUS PA field devices via short-circuit proof spur line connections to a PA fieldbus segment (line/ring) with automatic bus termination.

The PA fieldbus segment can be connected to a single or redundant PROFIBUS DP via a PA gateway and can thus be seamlessly integrated into the SIMATIC PCS 7 process control system.

Up to 8 AFD active field distributors with a total of up to 31 connected field devices can be operated for each fieldbus segment. The number of field devices is also limited by the current consumption of the field devices. A maximum of 60 mA per spur line and a maximum of 1 A per segment is available for the field devices.

An AFD in a ring segment can be replaced during operation without resulting in failure of the segment.

For compliance with IP66 degree of protection, it is necessary to protect unused spur line connections using blanking plugs.

Active field distributor AFD8, open

Based on the AFD4, two product variants were developed with the AFD4 RAILMOUNT and the AFD4 FM for different purposes:

Specific product features of the AFD4 RAILMOUNT

The AFD4 RAILMOUNT is supplied without die-cast aluminum housing. It is a product variant of the AFD4 active field distributor with flexible installation options. It can be installed on a top hat DIN rail into an enclosure of choice, for example, one made of stainless steel, die-cast aluminum or plastic.

Specific product features of the AFD4 FM

The AFD4 FM with cFMus approval is adapted to the special requirements for product variants of the AFD4 active field distributor in the USA and Canada. The AFD4 FM features threaded plugs ex factory, because the cable glands of the AFD4 do not conform to the requirements of cFMus.

The threaded plugs for connecting the main and spur lines must be replaced by the cable glands and cables listed by UL or CSA. They must conform to the US National Electrical Code (NEC) and Canadian Electrical Code (CEC). The user is responsible for selection and ordering.

Available suppliers for suitable cable glands:

- Cooper Capri SAS
- CMP products

Due to the larger bushing for the main line (M20 instead of M16), sheathed main line cables can also be used for AFD4 FM.

The relevant requirements of the US National Electrical Code (ANSI/NFPA-70 NEC) must be met for installation of the AFD4 FM.

© Siemens AG 2024

Overview (continued)

AFDiSD active field distributor

AFDiSD active field distributor

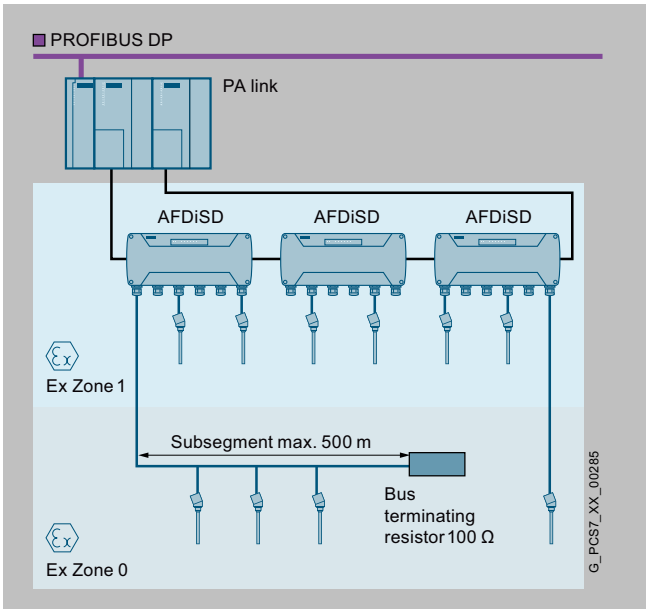

The AFDiSD (active field distributor intrinsically safe with optional extended PROFIBUS PA diagnostics) PROFIBUS PA field distributor can be operated in environments in accordance with Ex zone 1/21 and 2/22. It is a compatible replacement for AFDiS.

AFDiSDs can integrate up to 6 intrinsically safe PA field devices in a PA fieldbus segment (line/ring) via their intrinsically safe, short-circuit proof spur line connections. Instead of the spur line, it is also possible to use a subsegment for 3 to 4 devices with a max. length of 500 m at connection S1. The spur lines with Ex [ia] type of protection, as well as the subsegment, can be routed into Zone 0/20.

Up to 5 AFDiSD active field distributors with a total of up to 31 field devices can be operated in a fieldbus segment. A limit of 5 active field distributors is also mandatory for mixed operation of AFD and AFDiSD (extended PA fieldbus diagnostics in mixed operation).

The number of field devices per segment additionally depends on the current consumption of the devices and the cable lengths used. A current of 1 A is available for all field devices and the active field distributors of the segment.

With its integrated repeater function, AFDiSDs have the following advantages compared to the AFD:

Overview (continued)

- Spur line lengths are independent of the total number of spur lines in the bus segment
- Spur line lengths need not be taken into account when determining the total length of the bus segment

In environments in accordance with Ex Zone 2/22 or in non-hazardous areas, an AFDiSD in a ring segment can be replaced during operation without failure of the segment.

For compliance with IP66 degree of protection, it is necessary to protect unused spur line connections using blanking plugs.

Enhanced fieldbus diagnostics with AFDiSD in PROFIBUS PA

AFDiSD diagnostics are limited to short-circuits, loss of redundancy, detection of chatter, and failure of field devices. In addition, the extended fieldbus diagnostics, which can be activated per mode selector, enables comprehensive diagnostics of the entire PROFIBUS PA segment.

This includes, among others, the detection, recording and monitoring of:

- Topology (DP/PA coupler, AFDiSD)
- Voltage and current on the main and spur lines
- Signal and noise levels
- Capacitive unbalance to shield of main line

Configuration errors or defects can thus be rapidly detected and eliminated.

However, a prerequisite for application of the extended fieldbus diagnostics is that all active field distributors of the segment as well as the components of the PA link support this functionality. The following components satisfy this requirement:

- Active field distributor AFDiSD, Article No. 6ES7655-5DX60-1BB0
- IM 153-2 High Feature Outdoor interface module, Article No. 6ES7153-2BA70-0XB0
- DP/PA coupler FDC 157, Article No. 6ES7157-0AC85-0XA0

The interface module creates a topology model of the connected bus segment, and maps its status information. The DP/PA coupler and the locally installed active field distributor AFDiSD provide the interface module with the physical data of the bus segment for this purpose, as well as information on the status of the connected lines. The information provided by the interface module can be displayed on the PCS 7 Maintenance Station and evaluated by SIMATIC PDM.

When delivered from the factory, the enhanced fieldbus diagnostics is not activated in the AFDiSD. In this state, the functionality of the AFDiSD is equivalent to that of the AFDiS predecessor type.

© Siemens AG 2024

Selection and ordering data

Active field distributor (AFD) For integration of standard-compliant PA or FF field devices ***4 short-circuit-proof spur line connections for 1 field device each***	
• AFD4 with cable glands	**6ES7157-0AG81-0XA0**
• AFD4 RAILMOUNT (without enclosure) For mounting on a DIN rail in a suitable enclosure	**6ES7655-5DX40-2AA0**
8 short-circuit-proof spur line connections for 1 field device each	
• AFD8 with cable glands	**6ES7157-0AG82-0XA0**
AFDiSD (Active Field Distributor intrinsically Safe with optional extended PROFIBUS PA Diagnostics) With 6 short-circuit proof spur line connections for the integration of standard-compliant intrinsically safe PA or FF field devices	**6ES7655-5DX60-1BB0**
Accessories	
Blanking plugs For unused connections on the AFD and AFDiSD, 10 units ***Additional components required for extended fieldbus diagnostics with AFDiSD***	**6ES7157-0AG80-1XA1**
IM 153-2 High Feature Outdoor Interface module for PROFIBUS DP for ET 200M, PA link and Y link; redundancy capable; conformal coating, IP20 degree of protection; permissible operating temperature -25 to +60 °C	**6ES7153-2BA70-0XB0**
DP/PA coupler FDC 157	**6ES7157-0AC85-0XA0**

© Siemens AG 2024

Technical specifications

Article number	6ES7157-0AG81-0XA0	6ES7655-5DX40-2AA0	6ES7655-5DX40-1AA1	6ES7157-0AG82-0XA0
General information				
• Product function				
• Repeater function	No	No	No	No
Supply voltage				
Reverse polarity protection	Yes; only in conjunction with FDC 157			Yes; only in conjunction with FDC 157
Overvoltage protection	No			No
Input current				
Current consumption (in no-load operation), typ.	24 mA; 54 mA at the end of the cable	24 mA; 54 mA at the end of the cable	24 mA; 54 mA at the end of the cable	34 mA; 64 mA at the end of the cable
Current consumption, max.	264 mA			514 mA
Power loss				
Power loss, typ.	384 mW	384 mW	384 mW	544 mW
Power loss, max.	3.2 W	3.2 W	3.2 W	4.1 W
Interfaces				
• PROFIBUS PA				
• Transmission rate, max.	31.25 kbit/s	31.25 kbit/s	31.25 kbit/s	31.25 kbit/s
• Number of connectable PA field devices	4	4	4	8
• Current output to PA field devices, max.	240 mA	240 mA	240 mA	480 mA
• permissible current per spur line	60 mA	60 mA	60 mA	60 mA
Protocols				
PROFIBUS DP	No		No	No
PROFIBUS PA	Yes	Yes	Yes	Yes
AS-Interface	No		No	No
FOUNDATION Fieldbus H1	Yes	Yes	Yes	Yes
Interrupts/diagnostics/status information				
Status indicator	Yes	Yes	Yes	Yes
Alarms	No	No	No	No
Diagnostics function	Yes	Yes	Yes	Yes
• Diagnostics indication LED				
• Main line status	Yes	Yes	Yes	Yes
• Main line failure	Yes			Yes
• Spur line status/fault	Yes	Yes	Yes	Yes
• automatic bus termination	Yes	Yes	Yes	Yes
Potential separation				
between main line and spur lines	No	No	No	No
Degree and class of protection				
IP degree of protection	IP66	IP20	IP66	IP66
Standards, approvals, certificates				
• Use in hazardous areas				
• ATEX Zone 1	No	No	No	No
• ATEX Zone 21	No	No	No	No
• ATEX Zone 2	Yes	Yes	Yes	Yes
• ATEX Zone 22	Yes	Yes	Yes	Yes
• FM Class I Zone 1	No	No	No	No
• FM Class I Zone 2, Division 2	Yes	Yes	Yes	Yes
Ambient conditions				
• Ambient temperature during operation				
• min.	-40 °C	-40 °C	-40 °C	-40 °C
• max.	70 °C	70 °C	70 °C	70 °C

© Siemens AG 2024

Technical specifications (continued)

Article number	6ES7157-0AG81-0XA0	6ES7655-5DX40-2AA0	6ES7655-5DX40-1AA1	6ES7157-0AG82-0XA0
• Ambient temperature during storage/transportation				
• min.	-40 °C	-40 °C	-40 °C	-40 °C
• max.	85 °C	70 °C	85 °C	85 °C
• Relative humidity				
• Operation, max.	95 %			95 %
connection method / header				
• connection method / main cable / header				
• number of connections / for PROFIBUS PA main cable	2	2	2	2
• design of the electrical connection / for PROFIBUS PA main cable	Screw terminal block	Screw terminal block	Screw terminal block	Screw terminal block
• design of the thread / of cable screw connection / for PROFIBUS PA main cable	M16		M20	M16
• design of the PROFIBUS PA main cable	Type A	Type A	Type A	Type A
• diameter / of the PROFIBUS PA main cable / connectable / minimum	4 mm		6 mm	4 mm
• diameter / of the PROFIBUS PA main cable / connectable / maximum	9 mm		13 mm	9 mm
• connectable conductor cross-section / of the PROFIBUS PA main cable / minimum	0.2 mm²	0.2 mm²	0.2 mm²	0.2 mm²
• connectable conductor cross-section / of the PROFIBUS PA main cable / maximum	2.5 mm²	2.5 mm²	2.5 mm²	2.5 mm²
• product function / of the PROFIBUS PA main cable / automatic bus termination	Yes	Yes	Yes	Yes
• output current / for PROFIBUS PA main cable / maximum permissible	1 A	1 A	1 A	1 A
• connection method / spur line / header				
• Number of spur lines	4	4	4	8
• Design of terminals	Screw terminal block		Screw terminal block	Screw terminal block
• Type of connection (enclosure cable gland)	M16		M16	M16
• Type of cable	Type A	Type A	Type A	Type A
• Cable diameter, min.	4 mm		4 mm	4 mm
• Cable diameter, max.	9 mm		9 mm	9 mm
• Conductor cross-section, min.	0.2 mm²	0.2 mm²	0.2 mm²	0.2 mm²
• Conductor cross-section, max.	2.5 mm²	2.5 mm²	2.5 mm²	2.5 mm²
• total current output to field devices, max.	240 mA	240 mA	240 mA	480 mA
• Number of connectable field devices	4	4	4	8
• Current limitation per field device, max.	60 mA	60 mA	60 mA	60 mA
• No-load voltage, max.	30 V		30 V	
• Short-circuit current (test current); max.	6 mA	6 mA	6 mA	6 mA
• intrinsically safe according to FISCO model	No	No	No	No
• Debounce logic	Yes	Yes	Yes	Yes
Dimensions				
Width	220 mm	220 mm	220 mm	360 mm
Height	120 mm; without screw glands	120 mm	120 mm	120 mm; without screw glands
Depth	83 mm	83 mm	83 mm	83 mm
Weights				
Weight, approx.	2 000 g	1 000 g	2 000 g	3 000 g

© Siemens AG 2024

Overview

The following cables in different colors are offered for setting up PROFIBUS PA networks in accordance with IEC 61158-2 (for detailed information, refer to the IK PI Catalog, Industry Mall, or CA 01 Off-line Mall under Network components for PROFIBUS, Electrical networks PROFIBUS PA):

- PROFIBUS FC process cable, 2-wire, shielded, black sheath:
  For applications in non-intrinsically safe areas

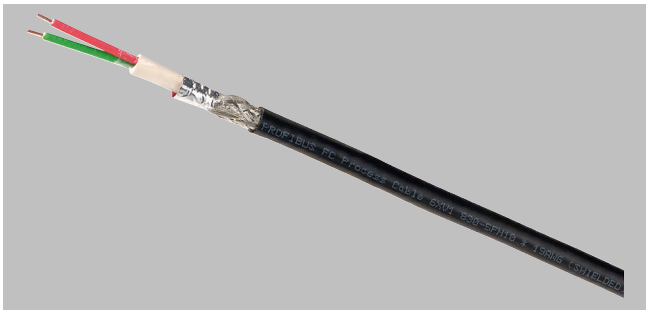

- PROFIBUS FC process cable, 2-wire, shielded, blue sheath:
  For applications in intrinsically safe areas

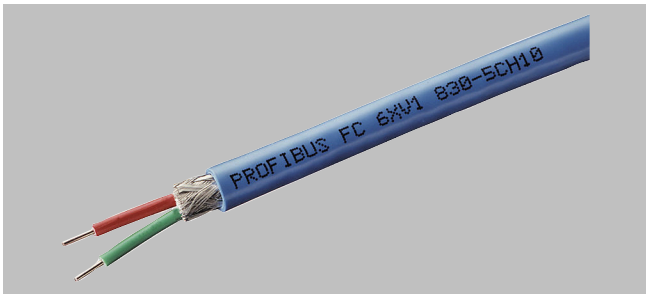

The FastConnect stripping tool can be used to strip the outer sheath and shield of the PROFIBUS FC process cables to the required lengths for PROFIBUS PA.

Design

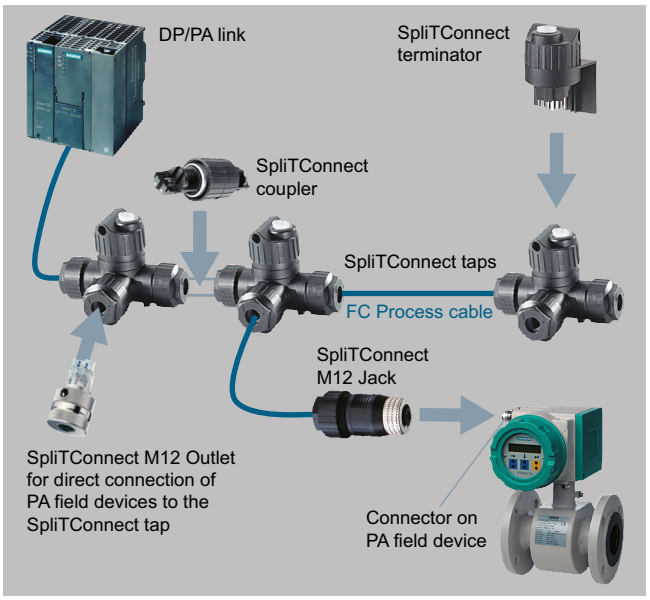

SpliTConnect

The SpliTConnect tap enables the design of fieldbus segments according to IEC 61158-2 with field device terminal points.

The SpliTConnect coupler can be used to construct a PROFIBUS PA hub by connecting SpliTConnect taps in series.

By replacing the contacting screw with the SpliTConnect terminator, the SpliTConnect tap can be used as a bus terminating element.

Terminal equipment can be connected directly through the FC process cable. Using the SpliTConnect M12 outlet, PA field devices can also be connected to the SpliTConnect tap by means of an M12 connection. The SpliTConnect M12 jack is a connecting element between an FC process cable and an M12 plug on the PROFIBUS PA field device. For details on SpliTConnect network components, see Catalog IK PI.

© Siemens AG 2024

Selection and ordering data

PROFIBUS FC process cable 2-wire, shielded	
• Sheath color: blue; for intrinsically safe applications	6XV1830-5EH10
• Sheath color: black; for non-intrinsically safe applications	6XV1830-5FH10
Sold by the meter: Max. delivery unit 1 000 m, minimum order quantity 20 m	
PROFIBUS FastConnect stripping tool Tool for fast stripping of the PROFIBUS FastConnect bus cable	6GK1905-6AA00
PROFIBUS FastConnect blade cassettes Spare blade cassettes for PROFIBUS FastConnect stripping tool, 5 units	6GK1905-6AB00
SpliTConnect tap For implementing PROFIBUS PA segments and connecting PA field devices, insulation displacement system, IP67, 10 units	6GK1905-0AA00
SpliTConnect M12 outlet Element for direct attachment of PA field devices to the SpliTConnect tap, 5 units	6GK1905-0AB10
SpliTConnect coupler Connecting element for cascading SpliTConnect taps to create neutral points, 10 units	6GK1905-0AC00
SpliTConnect Terminator For connecting PROFIBUS PA segments, 5 units	
• Terminator (Ex); can be used in hazardous areas	6GK1905-0AD00
• Terminator (non-Ex); cannot be used in hazardous areas	6GK1905-0AE00
SpliTConnect M12 jack Connecting element between an FC process cable and M12 plug on the PROFIBUS PA field device, 5 units	6GK1905-0AF00

© Siemens AG 2024

Overview

Compact FF Link, redundant

Depending on operator preference, FOUNDATION Fieldbus (FF) H1 can be used in addition to PROFIBUS PA as the fieldbus for the direct connection of transmitters and actuators to the SIMATIC PCS 7 process control system.

Design

Examples of FOUNDATION Fieldbus H1 architectures

When FOUNDATION Fieldbus H1 is integrated in the SIMATIC PCS 7 process control system, PROFIBUS DP acts as a link. The following graphical representations show possible FOUNDATION Fieldbus H1 architectures with:

- PROFIBUS DP master in non-redundant design (AS Single Station)
- PROFIBUS DP master in redundant design (AS Redundancy Station)

Depending on the configured PROFIBUS DP master, the gateway between PROFIBUS DP and FOUNDATION Fieldbus H1 is formed by a single Compact FF Link (AS Single Station) or a redundant Compact FF Link pair (AS Redundancy Station) (for details, see graphics). One FF fieldbus segment can be operated on each gateway.

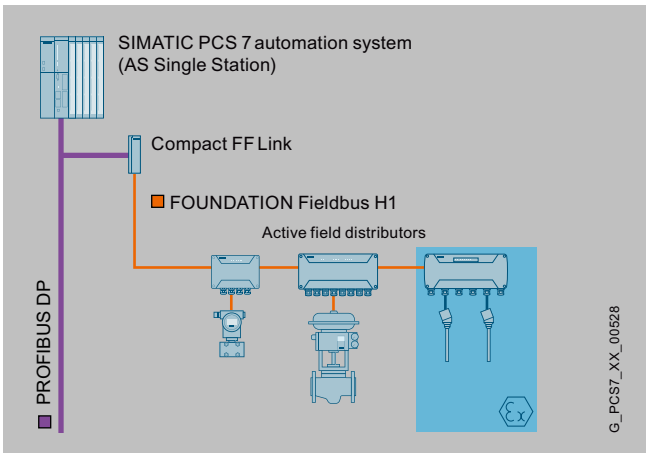

FOUNDATION Fieldbus H1 on an AS Single Station as PROFIBUS DP master

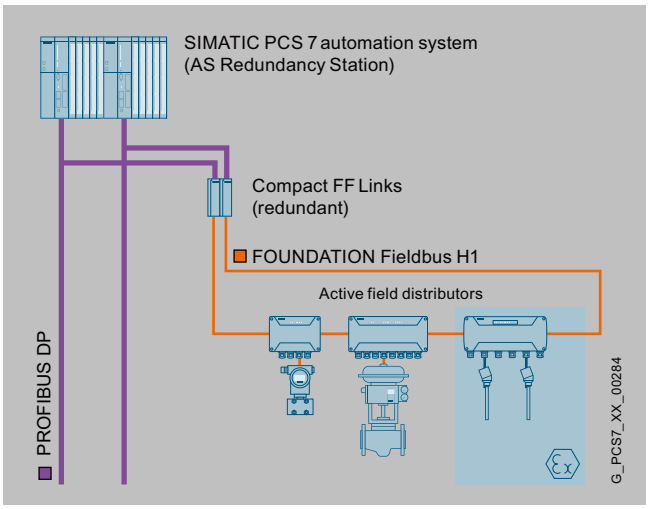

FOUNDATION Fieldbus H1 on an AS Redundancy Station as PROFIBUS DP master

Line architecture with single Compact FF Link

A line segment can be connected to an individual PROFIBUS DP line via a Compact FF Link. The FF-field devices can be integrated into the line segment via AFD active field distributors, e.g. AFD4, AFD4 RAILMOUNT, AFD4 FM and AFD8 (approval for Ex Zone 2/22) and AFDiSD (approval for Ex Zone 1/21). The FF-field devices are

© Siemens AG 2024

Design (continued)

connected to these field distributors using short-circuit-proof spur lines.

Alternatively, it is possible to operate up to 8 AFD field distributors, up to 5 AFDiSD field distributors or any combination of up to 5 AFDiSD and AFD field distributors in a line segment. The last field distributor at the end of the line farthest away from the Compact FF Link automatically activates its bus terminating resistor.

Ring architecture with redundant Compact FF Links

The highest availability can be achieved with a FOUNDATION Fieldbus H1 ring segment, which can be connected to a redundant PROFIBUS DP via a redundant Compact FF Link pair.

The FF field devices are integrated into the ring segment using the short-circuit-proof spur lines of the AFD or AFDiS active field distributors. The number of field distributors is limited as with the line architectures (up to 8 AFD, up to 5 AFDiS or any combination of up to 5 AFDiS and AFD).

The bus is terminated automatically and is immediately adapted in the event of changes or faults on the bus. An extension on the fieldbus or replacement of a Compact FF Link during operation is possible.

Function

Properties of FOUNDATION Fieldbus H1

Like PROFIBUS PA, the FOUNDATION Fieldbus H1 is based on IEC 61158-2. With MBP (Manchester coded Bus Powered) transmission system, digital data is transmitted and power is supplied to the bus nodes on a shielded two-wire cable. The constant transmission rate is 31.25 Kbps.

Up to 32 bus nodes (Compact FF Link + field devices) can be operated on one fieldbus segment (typically 8 to 12 devices). The field devices are integrated into the fieldbus segment via AFD (approval for Ex Zone 2/22) or AFDiS (approval for Ex Zone 1/21) active field distributors. Intrinsically-safe FF devices connected via AFDiS active field distributors can be installed in hazardous areas in accordance with Ex Zone 1/21 or 0/20.

The total length of the fieldbus segment is restricted to 1 900 m. If AFDs (active field distributors) are used, both the length of the spur lines for connecting devices and the quality of the cable used must also be considered when calculating the total length of the bus segment. Spur lines on the AFDiSD are not relevant to the total length of the bus segment.

The spur lines can have the following maximum lengths:

- Up to 120 m in accordance with IEC 61158-2
- Up to 120 m in accordance with IEC 60079-27 (FISCO)

With AFD active field distributors, the maximum values are reduced if necessary, depending on the number of spur lines of the bus segment (for details, see the "Technical specifications" section). With AFDiSD active field distributors, this reduction is canceled by the integrated repeater function.

The **SIMATIC Fieldbus Calculator** provides help in calculating and designing fieldbus segments:
https://support.industry.siemens.com/cs/ww/en/view/53842953

The FOUNDATION Fieldbus H1 combines cyclic and acyclic communication. Time-critical tasks such as the transfer of process data are executed cyclically according to an exact processing schedule. On the other hand, non-time-critical information such as maintenance/diagnostics data or configuration data is transferred acyclically.

Device management with EDD

The field device data for the following block types are distributed according to the block model:

- Device block (device-specific information)
- Function block (implemented functions)
- Transmission block (function for controlling input/output variables of a function block)

Fieldbus Foundation provides pre-defined device descriptions (standard DD) for the basic functions of specific field device types. The basic functions of the devices (e.g. analog input, digital output, etc.) are implemented by means of various standard function and transmission blocks.

The device descriptions are interpreted with SIMATIC PDM.

Control in the field

Function and transmission blocks can also be interconnected to form control loops. Together with suitable field devices, such a control application operates independent of the controller (automation system) of the control system.

Characteristic features at a glance

- Bus power supply to the field devices
- Topology: Line, tree, ring
- Integration of intrinsically safe field devices in hazardous areas with barriers
- Deterministic time response

© Siemens AG 2024

Function (continued)

- Interoperability due to standardized bus interface and device integration with standardized device descriptions
- Support of "Control in the field"

Integration

Integration in SIMATIC PCS 7

The FOUNDATION Fieldbus H1 can be integrated seamlessly in the SIMATIC PCS 7 process control system using PROFIBUS DP as link. The gateway between PROFIBUS DP and FOUNDATION Fieldbus H1 is realized with Compact FF Links. Either a single Compact FF Link or a redundant pair is used based on the selected bus architecture (see "Design" section).

Engineering of the FOUNDATION Fieldbus H1 segments is implemented as for PROFIBUS PA. Diagnostic information and configured maintenance information for Compact FF Links and FF devices are available via the SIMATIC PCS 7 Maintenance Station. SIMATIC PCS 7 generates the diagnostics screens automatically.

System requirements

- System software SIMATIC PCS 7 V8.1+ SP1 or higher
- SIMATIC PDM V8.2+SP1 or higher with SIMATIC PDM Communication FOUNDATION Fieldbus

Technical specifications

FOUNDATION Fieldbus H1	
Data transmission	MBP
Transmission rate	31.25 Kbps
Cable	2-wire shielded
Topology	Line, tree, ring
FF devices per segment/FF Link	31
Active field distributors per segment/FF Link	
• AFD	8
• AFDiSD or combinations of AFDiSD and AFD	5
Max. total current consumption of all FF field devices	0.5 A
Cable length per segment	1 900 m
Bus segments with AFD	
Max. spur line length in relation to the total number of spur lines	
Number of spur lines (1 device per spur line)	
• 1 to 12 spur lines	120 m
• 13 to 14 spur lines	90 m
• 15 to 18 spur lines	60 m
• 19 to 24 spur lines	30 m
• 25 to 31 spur lines	1 m
Bus segments with AFDiSD	
Max. spur line length independent of total number of spur lines	
Number of spur lines (1 device per spur line)	
• 1 to 31 spur lines	
- Not intrinsically-safe	120 m
- Intrinsically-safe acc. to FISCO	120 m

© Siemens AG 2024

Overview

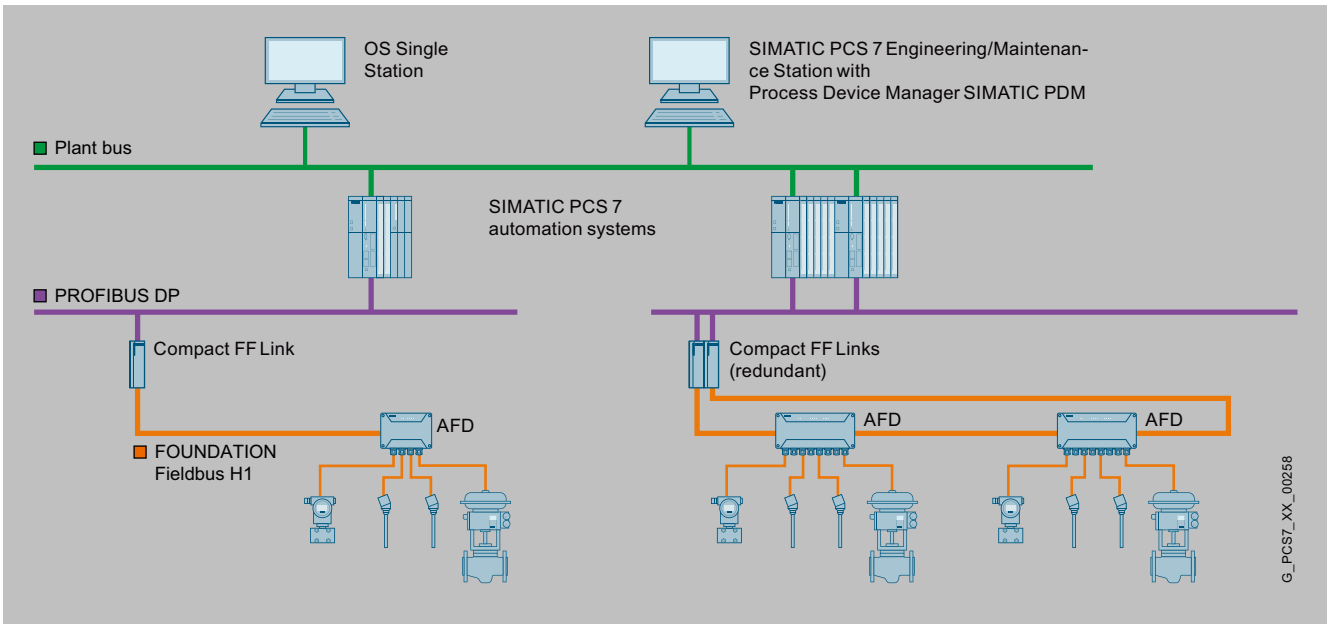

Examples of DP/FF gateways with Compact FF Link

A gateway based on the Compact FF Link between PROFIBUS DP and FOUNDATION Fieldbus H1 (FF) enables integration of a fieldbus segment with up to 31 standard-compliant FF-H1 field devices in the SIMATIC PCS 7 process control system. If the PROFIBUS DP master and PROFIBUS DP are implemented without redundancy, the gateway can be realized with a single Compact FF Link. With redundant implementation of the PROFIBUS DP master and PROFIBUS DP, a redundant Compact FF Link pair is required for the gateway.

The Compact FF Link is simultaneously a slave on PROFIBUS DP and the master on FOUNDATION Fieldbus H1. It decouples the hardware, communication protocols, and time response of the two bus systems.

A PROFIBUS address from 1 to 125 must be assigned for the Compact FF Link. In the case of redundant architecture, identical PROFIBUS addresses must be set for both Compact FF Links.

As the FF link master, the compact FF link controls the distributed communication of the FOUNDATION Fieldbus H1 segment deterministically using LAS (link active scheduler). If the Compact FF Link fails, a redundant partner module or a field device with the "Backup Link Master" property takes over the communication control. FF field devices in an FF segment are thus able to execute closed-loop control functions (Control in the Field) even independent of the higher-level controller.

© Siemens AG 2024

Design

Compact FF Link

The Compact FF Link is a S7-300 format device, consisting of a PROFIBUS DP interface (DPV1 slave) and a field device coupler for a subordinate FF bus segment. It can operated individually or redundantly in a pair.

The following architectures are thus possible (also refer to "FOUNDATION Fieldbus H1" section under "Design"):

- Single PROFIBUS DP interface (1 × Compact FF Link)
  - Line architecture with single Compact FF Link
- Redundant PROFIBUS DP interface (2 × Compact FF Link)
  - Ring architecture with redundant Compact FF Link pair (link and media redundancy)

Compact FF Link in non-redundant mode

If the FF segment is connected to PROFIBUS DP via a single compact FF link, the link can be mounted directly on a standard mounting rail.

If the 24 V DC incoming supply is not from a central power supply of the plant, a PS 307 or PS 305 load power supply can be used.

Compact FF Links in redundant mode

In a redundant configuration, the BM Compact FF Link bus module is first mounted on a mounting rail for "hot swapping". The two redundant Compact FF Links are then inserted. This enables a Compact FF Link to be replaced during operation.

In the case of a redundant Compact FF Link pair, a redundant 24 V DC supply is also recommended, e.g. with two PS 307/PS 305 load power supplies.

Selection and ordering data

Compact FF Link DP/FF gateway, 40 mm wide, FOUNDATION Fieldbus link master, with redundancy capability; physical interface to the FOUNDATION Fieldbus H1 with integrated bus power supply up to 0.5 A and integrated diagnostics; degree of protection IP20; for extended temperature range, permissible operating temperature -40 to +70 °C	**6ES7655-5BA00-0AB0**
Accessories	
PS 307 load power supply Including connecting comb; 120/230 V AC; 24 V DC	
• 2 A; 40 mm wide	**6ES7307-1BA01-0AA0**
• 5 A; 60 mm wide	**6ES7307-1EA01-0AA0**
• 5 A, extended temperature range; 80 mm wide	**6ES7307-1EA80-0AA0**
• 10 A, 80 mm wide	**6ES7307-1KA02-0AA0**
PS 305 load power supply 24/48/60/110 V DC; 24 V DC	
• 2 A, extended temperature range; 80 mm wide	**6ES7305-1BA80-0AA0**
Components for stand-alone operation	
Standard mounting rails (without hot swapping function)	
• Width 482 mm (19")	**6ES7390-1AE80-0AA0**
• Width 530 mm	**6ES7390-1AF30-0AA0**
Components for redundant operation	
BM Compact FF Link Bus module for 2 Compact FF Links; for redundant operation	**6ES7655-5EF00-0AA0**
Mounting rail for hot swapping	
• Width 482 mm (19")	**6ES7195-1GA00-0XA0**
• Width 530 mm	**6ES7195-1GF30-0XA0**
• Width 620 mm	**6ES7195-1GG30-0XA0**
• 2 000 mm wide	**6ES7195-1GC00-0XA0**
Covers 4 backplane bus covers and 1 cover for active bus module	**6ES7195-1JA00-0XA0**

© Siemens AG 2024

Technical specifications

Compact FF Link	
Design and equipment features	
Function	Bus link of PROFIBUS DP (slave functionality) and FOUNDATION Fieldbus H1 (link master functionality) with support of the "Configuration in Run" functionality
Installation type/mounting	Front mounting, preferably on mounting rail
Degree of protection according to EN 60529	IP20
Voltages, currents, potentials	
Rated supply voltage	24 V DC (20.4 V ... 28.8 V)
Input current, max. current consumption	1.3 A
External fusing of power supply lines (recommended)	Min. 4 A
Rated output voltage for FF H1	31 V DC ± 1 V
• Overvoltage monitoring	U > 35 V; latching shutdown
• Voltage failure bridging	5 ms
Output current for FF H1 (for supply of all FF field devices)	0.5 A
Power loss	8 W
Galvanic isolation	
• FF H1 to PROFIBUS DP	Yes
• DP master system to FF H1	Yes
• FF H1/24 V DC supply / PROFIBUS DP	Yes
• All electric circuits/functional grounding	Yes
Frame length	
• Input/output data	244 bytes/244 bytes
• Configuration frame	Max. 244 bytes
• Diagnostics frame	Max. 244 bytes
• Parameter assignment frame	Max. 244 bytes
Interfaces	
Interface hardware	RS 485 - yes; FOC - no
PROFIBUS DP	
• Permissible device addresses	1 to 125
• Transmission rate (automatic detection)	Max. 12 Mbps
• Bus protocol/transmission protocol	PROFIBUS DP
• Transmission mode	RS 485
• Connection	9-pin D-sub connector
FOUNDATION Fieldbus H1	
• Transmission rate	31.25 Kbps
• Bus protocol/transmission protocol	FOUNDATION Fieldbus H1
• Transmission mode	MBP
• Connection	2-pin screw terminal
Status, interrupts, diagnostics	
Status displays	
• Group error	Red LED "SF"
• Bus error on higher level DP master system	Red "BF DP" LED
• Bus error on subordinate FF H1	Red "BF FF" LED
• Active PROFIBUS DP channel	Yellow "ACT DP" LED
• Active FF H1 channel	Yellow "ACT FF" LED
• 24 V DC power supply monitoring	Green "ON" LED
Climatic conditions	
Ambient temperature in operation	
• Horizontal installation	-40 to +70 °C

Technical specifications (continued)

• Vertical installation	-40 to +50 °C
Permissible storage/transport temperature	-40 to +85 °C
Relative humidity during operation	Max. 95%, without condensation
Approvals for potentially explosive atmospheres	
• Gas	ATEX II 3 G Ex nA II T4
• Dust	No
• Equipment Ex ia/Ex ib	No/No
Standards, specifications, approvals	
CE mark according to 2004/108/EC, 94/9/EC	Yes
UL approval	Yes
RCM (formerly C-Tick)	Yes
KC certification	Yes
EAC (formerly Gost-R)	Yes
PROFIBUS standard	IEC 61784-1 CP 3/1
FOUNDATION Fieldbus guideline	IEC 61158-2
Dimensions and weight	
Dimensions (W × H × D) in mm	40 × 125 × 130
Weight	Approx. 350 g

© Siemens AG 2024

Overview

Active Field Distributor AFD4

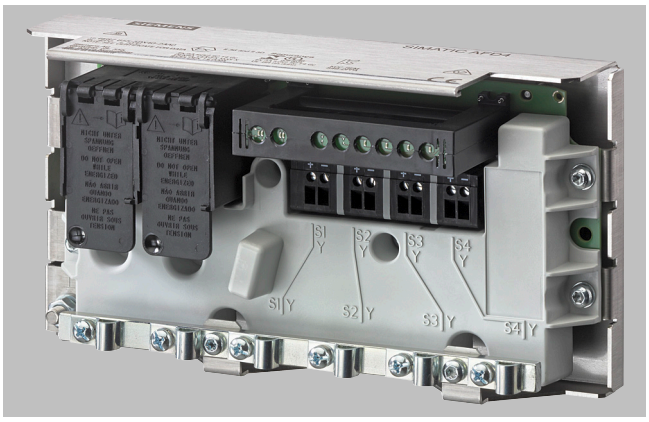

Active Field Distributor AFD4 RAILMOUNT

Active Field Distributor AFD8

Active Field Distributor AFD

Active field distributors (AFD) can be operated in environments in accordance with Division 2, Zone 2 or Zone 22. The following models are available:

- AFD4, AFD4 RAILMOUNT or AFD4 FM with 4 spur line connections for 1 field device each
- AFD8 with 8 spur line connections for 1 field device each

Overview (continued)

An AFD4/AFD4 RAILMOUNT/AFD4 FM can therefore integrate up to 4, and an AFD8 up to 8 standard-compliant FF (FOUNDATION Fieldbus H1) field devices via short-circuit proof spur line connections to a fieldbus segment (line/ring) with automatic bus termination.

The FF fieldbus segment can be connected to a single or redundant PROFIBUS DP via an FF gateway and can thus be seamlessly integrated into the SIMATIC PCS 7 process control system.

Up to 8 AFD active field distributors with a total of up to 31 connected field devices can be operated for each fieldbus segment. The number of field devices is also limited by the current consumption of the field devices. A maximum of 60 mA per spur line and a maximum of 0.5 A per segment is available for the field devices.

An AFD in a ring segment can be replaced during operation without resulting in failure of the segment.

For compliance with IP66 degree of protection, it is necessary to protect unused spur line connections using blanking plugs.

Based on the AFD4, two product versions with different intentions were developed with the AFD4 RAILMOUNT and the AFD4 FM:

Specific product features of the AFD4 RAILMOUNT

The AFD4 RAILMOUNT is supplied without die-cast aluminum enclosure; it is a product model of the AFD4 active field distributor with flexible installation options. It can be installed on a DIN mounting rail into an enclosure of choice, for example, one made of stainless steel, die-cast aluminum or plastic.

Specific product features of the AFD4 FM

The AFD4 FM with cFMus approval is adapted to the special requirements for product variants of the AFD4 active field distributor in the USA and Canada. The AFD4 FM features threaded plugs ex factory, because the cable glands of the AFD4 do not conform to the requirements of cFMus.

The threaded plugs for connecting the main and spur lines must be replaced by the cable glands and cables listed by UL or CSA. They must conform to the US National Electrical Code (NEC) and Canadian Electrical Code (CEC). The user is responsible for selection and ordering.

Available suppliers for suitable cable glands:

- Cooper Capri SAS
- CMP products

Due to the larger bushing for the main line (M20 instead of M16), sheathed main line cables can also be used for AFD4 FM.

The relevant requirements of the US National Electrical Code (ANSI/NFPA-70 NEC) must be met when installing the AFD4 FM.

AFDiSD active field distributor

AFDiSD active field distributor

© Siemens AG 2024

Overview (continued)

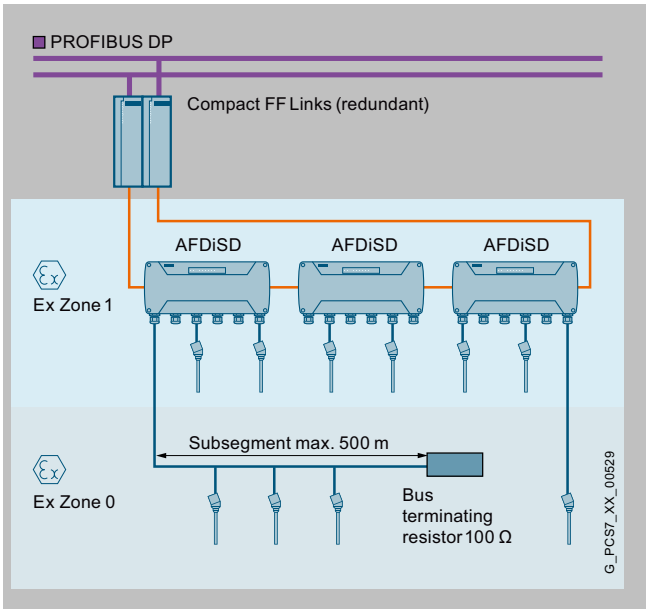

The AFDiS (Active Field Distributor intrinsically Safe) is an active field distributor for operating environments in accordance with Ex Zones 1/21 and 2/22. It can integrate up to 6 intrinsically-safe FF field devices into an FF fieldbus segment (line/ring) via its intrinsically-safe, short-circuit-proof spur line connections. Instead of the spur line, it is also possible to use a subsegment for 3 to 4 devices with a max. length of 500 m at connection S1 of the AFDiS. The spur lines with Ex [ia] type of protection as well as the subsegment can be routed into Zone 0/20.

Up to 5 AFDiS field distributors with a total of up to 31 field devices can be operated in a fieldbus segment. The limitation to 5 field distributors is also mandatory for mixed operation of AFD and AFDiS.

The number of field devices per segment additionally depends on the current consumption of the devices. A current of 0.5 A is available for all field devices of the segment.

With the integrated repeater function, the AFDiS has the following advantages compared to the AFD:

- Spur line lengths are independent of the total number of spur lines in the bus segment.
- Spur line lengths need not be taken into account when determining the total length of the bus segment.

In environments in accordance with Ex Zone 2/22 or in non-hazardous areas, an AFDiSD in a ring segment can be replaced during operation without failure of the segment.

For compliance with IP66 degree of protection, it is necessary to protect unused spur line connections using blanking plugs.

Selection and ordering data

Active field distributor (AFD) For integration of standard-compliant PA or FF field devices	
4 short-circuit-proof spur line connections for 1 field device each	
• AFD4 with cable glands	**6ES7157-0AG81-0XA0**
• AFD4 RAILMOUNT (without enclosure) For mounting on a DIN mounting rail in a suitable enclosure	**6ES7655-5DX40-2AA0**
8 short-circuit-proof spur line connections for 1 field device each	
• AFD8 with cable glands	**6ES7157-0AG82-0XA0**
AFDiSD (active field distributor intrinsically safe with optional extended PROFIBUS PA diagnostics) With 6 short-circuit proof spur line connections for the integration of standard-compliant intrinsically-safe PA or FF field devices	**6ES7655-5DX60-1BB0**
Accessories	
Blanking plugs For unused connections on the AFD and AFDiSD, 10 units	**6ES7157-0AG80-1XA1**

© Siemens AG 2024

Technical specifications

Article number	6ES7655-5DX60-1BB0
General information	
• Product function	
• Repeater function	Yes
Supply voltage	
Design of the power supply	via fieldbus
Reverse polarity protection	Yes; only in conjunction with FDC 157
Overvoltage protection	Yes; only in conjunction with FDC 157
Input current	
Current consumption, max.	400 mA; at 20 V input voltage
Current consumption in the case of short-circuit at all spur lines	100 mA; at 24 V input voltage
Power loss	
Power loss, typ.	1.4 W; minimum - typ. specification not possible because load-dependent
Power loss, max.	5.9 W
Interfaces	
• PROFIBUS PA	
• Transmission rate, max.	31.25 kbit/s
• Number of connectable PA field devices	6
• Current output to PA field devices, max.	260 mA; max. 180 mA total current of all field devices for operation in the permissible operating voltage range from 16 V to 32 V
• permissible current per spur line	40 mA; first spur line 60 mA
Protocols	
PROFIBUS DP	No
PROFIBUS PA	Yes
AS-Interface	No
FOUNDATION Fieldbus H1	Yes
Interrupts/diagnostics/status information	
Status indicator	Yes
Alarms	No
Diagnostics function	Yes
• Diagnostics indication LED	
• Main line status	Yes
• Main line failure	Yes
• Spur line status/fault	Yes
• automatic bus termination	Yes
Potential separation	
between main line and spur lines	Yes
Degree and class of protection	
IP degree of protection	IP66
Standards, approvals, certificates	
• Use in hazardous areas	
• ATEX Zone 1	Yes
• ATEX Zone 21	Yes
• ATEX Zone 2	Yes
• ATEX Zone 22	Yes
• FM Class I Zone 1	No
• FM Class I Zone 2, Division 2	No
Ambient conditions	
• Ambient temperature during operation	
• min.	-40 °C
• max.	70 °C

© Siemens AG 2024

Technical specifications (continued)

Article number	6ES7655-5DX60-1BB0
• Ambient temperature during storage/transportation	
• min.	-40 °C
• max.	70 °C
• Relative humidity	
• Operation, max.	95 %
connection method / header	
• connection method / main cable / header	
• number of connections / for PROFIBUS PA main cable	2
• design of the electrical connection / for PROFIBUS PA main cable	Screw terminal block
• design of the thread / of cable screw connection / for PROFIBUS PA main cable	M20
• design of the PROFIBUS PA main cable	Type A
• diameter / of the PROFIBUS PA main cable / connectable / minimum	6 mm
• diameter / of the PROFIBUS PA main cable / connectable / maximum	13 mm
• connectable conductor cross-section / of the PROFIBUS PA main cable / minimum	0.2 mm²
• connectable conductor cross-section / of the PROFIBUS PA main cable / maximum	2.5 mm²
• product function / of the PROFIBUS PA main cable / automatic bus termination	Yes
• output current / for PROFIBUS PA main cable / maximum permissible	1 A
• connection method / spur line / header	
• Number of spur lines	6
• Design of terminals	Screw terminal block
• Type of connection (enclosure cable gland)	M16
• Type of cable	Type A
• Cable diameter, min.	4 mm
• Cable diameter, max.	9 mm
• Conductor cross-section, min.	0.2 mm²
• Conductor cross-section, max.	2.5 mm²
• total current output to field devices, max.	260 mA; max. 180 mA total current of all field devices for operation in the permissible operating voltage range from 16 V to 32 V
• Number of connectable field devices	6
• Current limitation per field device, max.	40 mA; 60 mA on S1
• No-load voltage, max.	15.3 V
• short-circuit proof	Yes
• Short-circuit current (test current); max.	6 mA
• intrinsically safe according to FISCO model	Yes
• Debounce logic	Yes
Dimensions	
Width	380 mm
Height	85 mm
Depth	170 mm
Weights	
Weight, approx.	4 500 g

© Siemens AG 2024

Overview

Depending on the field of application, cables in different colors are offered for setting up FOUNDATION Fieldbus H1 networks in accordance with IEC 61158-2:

- FOUNDATION Fieldbus Cable, 2-wire, shielded, yellow sheath
  For applications in non-intrinsically safe areas

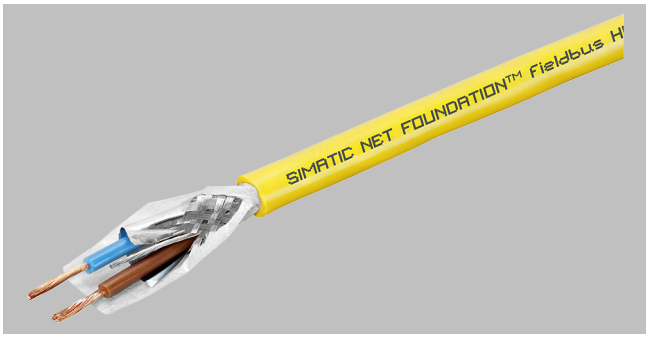

- FOUNDATION Fieldbus Cable, 2-wire, shielded, blue sheath
  For applications in intrinsically safe areas

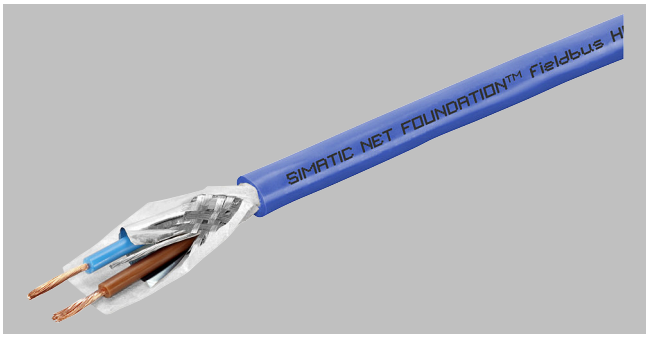

Selection and ordering data

FOUNDATION Fieldbus Cable Bus cable according to IEC 61158-2, 2-wire, shielded; stranded filler wires	
• Sheath color: yellow; for non-intrinsically safe applications	**6XV1830-5HH10**
• Sheath color: blue; for intrinsically safe applications	**6XV1830-5GH10**
Sold by the meter: Max. delivery unit 1 000 m, minimum order quantity 20 m	

© Siemens AG 2024

Overview

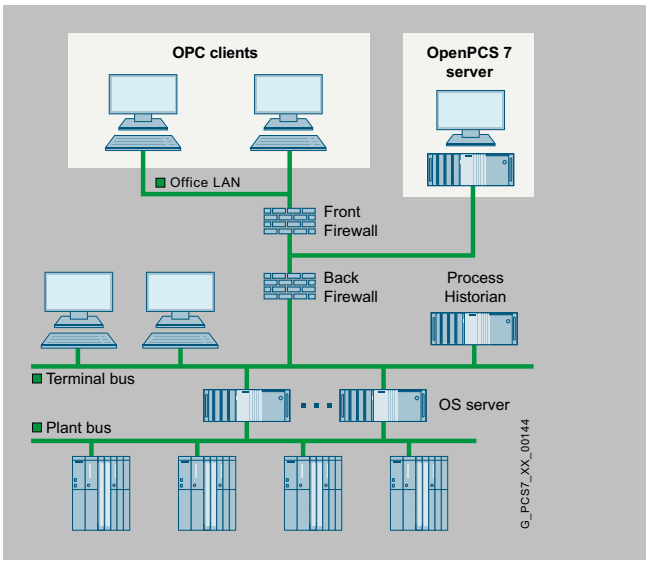

Use the OpenPCS 7 interface to directly integrate the SIMATIC PCS 7 process control system into host systems for production planning, process data evaluation and management. These higher-level systems (OPC clients) can access SIMATIC PCS 7 process data by means of the OpenPCS 7 server. However, access to SIMATIC BATCH data is not possible.

The OpenPCS 7 server collects data for the OPC clients. Depending on the system configuration, these data may be distributed across different SIMATIC PCS 7 stations (OS server, central archive server). It covers the distribution of data with respect to:

- Time period (OS1/OS2/...)
- Location (OS1/OS2/...)
- Redundancy (OS1 master/OS1 standby ...)

Design

The OpenPCS 7 server can be operated in two different configurations:

- Autonomous OpenPCS 7 server based on a SIMATIC PCS 7 Industrial Workstation in the client version (recommended preferred configuration)
- Multi-functional SIMATIC PCS 7 Industrial Workstation, client version, with OpenPCS 7 server and OS client functionalities (OpenPCS 7 server/OS client)

Function

The OpenPCS 7 interface is based on various OPC specifications (openness, productivity, collaboration). In addition to Microsoft's DCOM technology (Distributed Component Object Model), it also supports the more sophisticated OPC UA (Unified Architecture) protocol for communication between applications.

Special features of OPC UA:

- Data transfer combined with machine-readable semantic data description
- Platform independence
- Access via firewalls and over the Internet
- Communication reliability
- Security implementation

Access facilities of OPC clients

OPC DA (data access server) or
OPC UA DA (unified architecture data access)

For read and write access to process values

As an OPC DA or OPC UA DA server, the OpenPCS 7 server provides other applications with current data from the OS data management. The OPC client can log itself onto ongoing changes and also write values.

OPC HDA (historical data access server) or
OPC UA HA (unified architecture historical access)

For read access to archived process values

As an OPC HDA or OPC UA HA server, the OpenPCS 7 server provides other applications with historical data from the OS archive system. The OPC client, e.g. a reporting tool, can specifically request the required data by defining the start and end of a time interval. In addition, the OPC HDA server offers a wide range of aggregate functions, including variance, mean value and integral. This enables preprocessing by the HDA server, thus contributing to reducing the communication load.

OPC A&E (alarm & events server) or
OPC UA A&C (unified architecture alarms & conditions)

For read access to messages, alarms and events

As an OPC A&E or OPC UA A&C server, the OpenPCS 7 server passes on OS messages together with all accompanying process values to the subscribers at the production and corporate management levels. Some messages can be acknowledged there. Filter mechanisms and subscriptions ensure that only selected, modified data are transmitted.

OPC "H" A&E (historical alarm & events server)

For read access to archived alarms and messages

Thanks to a Siemens extension of the OPC A&E standard interface, the OpenPCS 7 server is able to transmit historic alarms and messages from the archive to subscribers at the production and corporate control levels. Archived messages cannot be read via OPC UA A&C.

OLE DB

Simple, standardized direct access to the archive data in the Microsoft SQL Server database of the operator system is possible with the OLE-DB. Through this, all OS archive data are accessible with the accompanying process values, message texts and user texts.

© Siemens AG 2024

Selection and ordering data

Multi-functional OpenPCS 7 Server/OS Client	
SIMATIC PCS 7 OpenPCS 7/OS Client V10.0 OpenPCS 7 software for expansion of an existing OS Client with OpenPCS 7 Server functionality 6 languages (English, German, French, Italian, Spanish, Chinese), software class A, runs with Windows 10 Enterprise 2019/2021 LTSC, (see SIMATIC PCS 7 V10.0 Readme for more information), single license for 1 installation Without SIMATIC PCS 7 Software Media Package	
• Goods delivery - License key USB flash drive, Certificate of License	**6ES7658-0GX78-2YB0**
• Online delivery - License key download, online Certificate of License	**6ES7658-0GX78-2YH0**
Email address required!	
Autonomous OpenPCS 7 Server	
SIMATIC PCS 7 OpenPCS 7 V10.0 OpenPCS 7 software for a separate OpenPCS 7 Server, based on the hardware of the SIMATIC PCS 7 Workstation, client version 6 languages (English, German, French, Italian, Spanish, Chinese), software class A, runs with Windows 10 Enterprise 2019/2021 LTSC, (see SIMATIC PCS 7 V10.0 Readme for more information), single license for 1 installation Without SIMATIC PCS 7 Software Media Package	
• Goods delivery - License key USB flash drive, Certificate of License	**6ES7658-0HX78-2YB0**
• Online delivery - License key download, online Certificate of License	**6ES7658-0HX78-2YH0**
Email address required	

More information

To ensure safe operation of the plant, you need to take suitable security measures that also include IT security (e.g. network segmentation). You can find more information on the topic of Industrial Security on the Internet at

© Siemens AG 2024

Overview

Connections can be made from an AS-Interface to PROFIBUS DP using gateways.

Modbus is connected to PROFIBUS DP using an ET 200M with CP 341 communications module.

© Siemens AG 2024

Overview

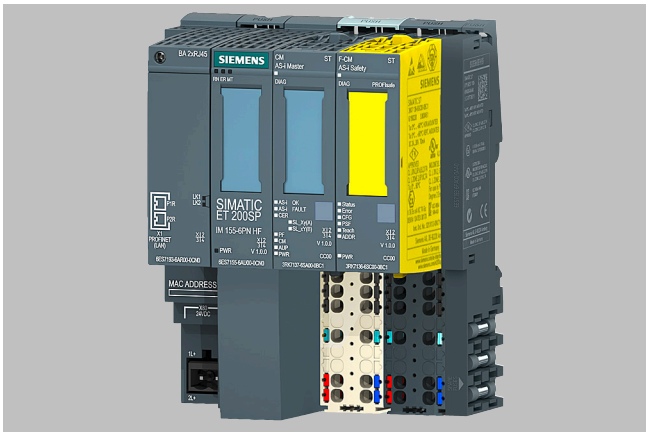

Combination of ET 200SP interface module, CM AS-i Master ST and F-CM AS-i Safety ST

The actuator/sensor interface (AS-Interface) is a heterogeneous bus system for networking simple, usually binary actuators and sensors at the lowest field level. It is then possible to replace a cable harness with parallel wiring by a simple two-wire line for simultaneous transmission of data and power.

The AS-Interface operates according to the master/slave principle. The AS-i master module (CP 343-2, CP 343-2P or communications module CM AS-i Master ST) controls the slaves (sensors/actuators) connected via AS-i cable. Up to 62 AS-Interface slaves can be operated on an AS-Interface master module.

Note:

AS-Interface is integrated as a *subordinate* bus in SIMATIC PCS 7. For more information on the AS-Interface, see Catalog IC 10.

CP 343-2 P communications processor

Design

The AS-Interface can be integrated into the SIMATIC PCS 7 process control system as follows:

- Connection via a CM AS-i Master ST AS-i master module in an ET 200SP station to PROFINET IO or PROFIBUS DP
- Connection via a CP 343-2 or CP 343-2P AS-i master module in an ET 200M remote I/O station to PROFINET IO or PROFIBUS DP

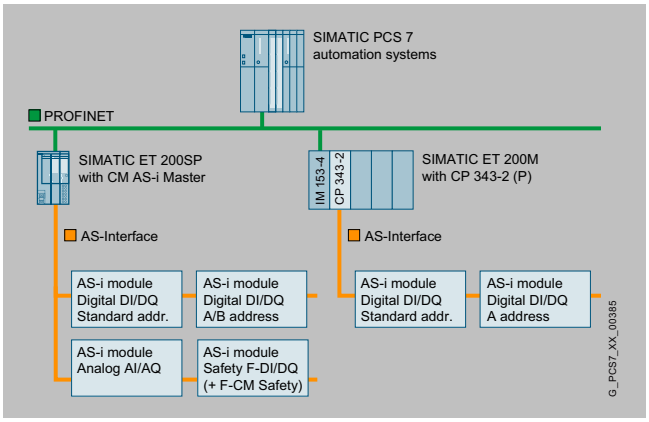

AS-i integration in SIMATIC PCS 7 via PROFINET IO

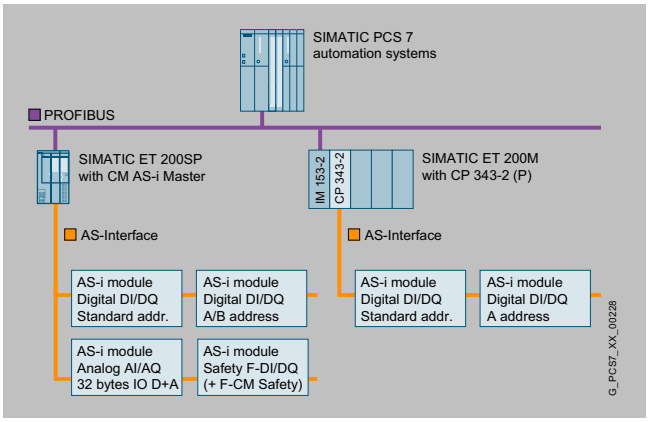

AS-i integration in SIMATIC PCS 7 via PROFIBUS DP

System components

The basic components of a system installation are:

- AS-Interface master:
  - CM AS-i Master ST (in an ET 200SP station)
  - CP 343-2 or CP 343-2P (both can be operated in an ET 200M remote I/O station)
- AS-Interface block library for SIMATIC PCS 7 (add-on product, see Catalog "Add-ons for SIMATIC PCS 7", chapter "Libraries/Blocks/Tools")
- AS-i modules for connecting standard sensors/actuators
- Actuators and sensors with integrated AS-i connection
- AS-i power supply unit for powering the AS-i components and the connected sensors

© Siemens AG 2024

Design (continued)

- AS-Interface shaped cable (for simple piercing connection of the AS-i modules IP67), optionally also usable as round cable (e.g. for AS-i modules IP20)
- AS-i addressing unit (for simple setting of the AS-i address of the AS-i modules)

AS-i modules

AS-i slave modules can be used in accordance with the AS-i specification V3.0.

Observe the restrictions specified in the following notes and in the documentation for the AS-Interface block library for SIMATIC PCS 7 version used.

For information on the AS-Interface block library for SIMATIC PCS 7, see https://support.industry.siemens.com/cs/document/109759605

Notes:

The CP 343-2 and CP 343-2P AS-i masters transfer I/O data from digital AS-i modules with a B address via data records and not via the cyclic process image (partition). To prevent delays in the communication process of the driver blocks for B-slaves, it is recommended to avoid using AS-i modules with B addresses for SIMATIC PCS 7 configurations with CP 343-2 or CP 343-2P.

When an ET 200M station with CP 343-2 or CP 343-2P is used, the AS-Interface block library for SIMATIC PCS 7 does not transfer analog values.

When an ET 200SP station is used on PROFIBUS DP, a maximum of 32 bytes is transferred per ET 200SP module, i.e. a total of 32 bytes I/O is available per CM AS-i Master ST for digital and analog values of the AS-i modules.

These restrictions do not apply when an ET 200SP is used on PROFINET IO and version 9.1 of the AS-Interface block library for SIMATIC PCS 7.

When the optional F-CM AS-i Safety fail-safe module is used in an ET 200SP station, AS-i safety modules can also be used. The safety-oriented signals are interconnected outside of the AS-Interface block library for SIMATIC PCS 7:

Selection and ordering data

CM AS-i Master ST communications module • AS-Interface master for SIMATIC ET 200SP, for plugging onto BaseUnit Type C0 • Corresponds to AS-Interface Specification V3.0 • Dimensions (W x H x D / mm): 20 x 73 x 58	**3RK7137-6SA00-0BC1**
CP 343-2 Communications module for connecting SIMATIC S7-300 and ET 200M to AS-Interface; configuration of the AS-i network by means of SET button; including manual on CD (German, English, French, Spanish, Italian); without front connector	**6GK7343-2AH01-0XA0**
CP 343-2P Communications module for the connection of SIMATIC S7-300 and ET 200M to AS-Interface; configuration of the AS-i network by means of SET button or HW Config (STEP 7); including manual on CD (English, German, French, Spanish, Italian); without front connector	**6GK7343-2AH11-0XA0**
Front connector 20-pin, with screw connections	**6ES7392-1AJ00-0AA0**
Other accessories For cable material, plugs, and other accessories, see Catalog IC 10 or Industry Mall under "Automation technology – Industrial controls – Industrial communication – AS-Interface"	

© Siemens AG 2024

Overview

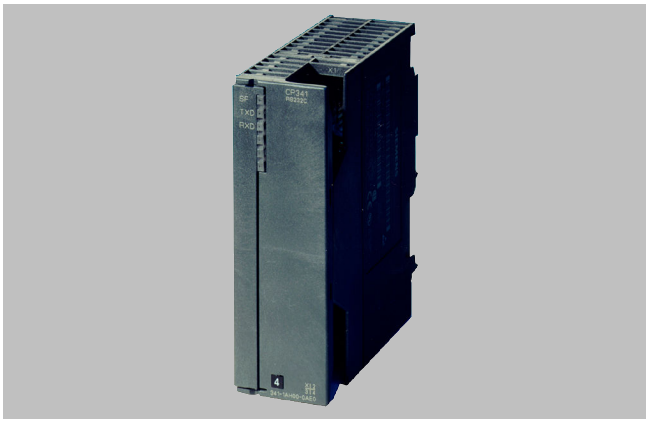

CP 341 communications module

Modbus can be connected to PROFIBUS DP using an ET 200M with the CP 341 communications module. This module enables fast and efficient data exchange through point-to-point coupling.

The CP 341 communications module is available in 3 versions with different physical transmission properties:

- RS 232C (V.24)
- 20 mA (TTY)
- RS 422/RS 485 (X.27)

The Modbus Master or Modbus Slave loadable drivers are needed for the Modbus coupling.

Selection and ordering data

CP 341 communications module With 1 RS 232 C (V.24) interface	**6ES7341-1AH02-0AE0**
RS 232 connecting cable For coupling to SIMATIC S7	
• 5 m	**6ES7902-1AB00-0AA0**
• 10 m	**6ES7902-1AC00-0AA0**
• 15 m	**6ES7902-1AD00-0AA0**
CP 341 communications module With 1 20 mA (TTY) interface	**6ES7341-1BH02-0AE0**
20 mA (TTY) connecting cable For coupling to SIMATIC S7	
• 5 m	**6ES7902-2AB00-0AA0**
• 10 m	**6ES7902-2AC00-0AA0**
• 50 m	**6ES7902-2AG00-0AA0**
CP 341 communications module With 1 RS 422/485 (X.27) interface	**6ES7341-1CH02-0AE0**
RS 422/485 connecting cable For coupling to SIMATIC S7	
• 5 m	**6ES7902-3AB00-0AA0**
• 10 m	**6ES7902-3AC00-0AA0**
• 50 m	**6ES7902-3AG00-0AA0**
Loadable drivers for CP 341	
MODBUS master (RTU format)	
• Single license	**6ES7870-1AA01-0YA0**
• Single license, without software and documentation	**6ES7870-1AA01-0YA1**
MODBUS slave (RTU format)	
• Single license	**6ES7870-1AB01-0YA0**
• Single license, without software and documentation	**6ES7870-1AB01-0YA1**

© Siemens AG 2024

15/3	**Introduction**
15/7	**Central I/O for SIMATIC PCS 7**
15/8	Central I/O modules
15/9	Expansion units for central I/O
15/11	**Power supplies**
15/13	1-phase power supplies, 24 V DC
15/15	1-phase and 2-phase power supplies, 24 V DC
15/17	3-phase power supplies, 24 V DC
15/19	3-phase power supply system, 24 V DC
15/22	Add-on modules
15/25	SITOP DC UPS uninterruptible power supplies
15/28	**SIMATIC CFU**
15/30	SIMATIC CFU CIO HART edition
15/37	SIMATIC CFU PA edition
15/44	SIMATIC CFU DIQ edition
15/49	BusAdapters
15/51	**SIMATIC ET 200SP HA**
15/55	Interface module
15/58	Digital I/O modules
15/65	Analog I/O modules
15/71	Analog/digital module
15/77	Technology modules
15/82	Fail-safe I/O-modules
15/83	Ex I/O modules
15/88	Carrier modules
15/91	Terminal blocks
15/95	BusAdapters
15/98	Additional I/O modules
15/99	Pneumatics
15/99	AirLINE SP valve terminal type 8647 for integration into ET 200SP HA
15/100	**SIMATIC ET 200iSP**
15/103	Power supply unit
15/105	Interface modules
15/108	Digital electronic modules
15/113	Analog electronic modules
15/116	Safety-related electronic modules
15/121	Watchdog module
15/123	RS 485-iS coupler
15/125	Stainless steel wall enclosure
15/127	**SIMATIC ET 200M for SIMATIC PCS 7**
15/129	Power supply
15/130	Interface modules
15/131	Accessories
15/133	Bundles
15/134	Digital modules
15/139	Analog modules
15/142	Analog modules with HART
15/146	Ex digital/analog modules
15/150	F-digital/analog modules
15/152	Controller modules
15/154	Counter modules

15/155	MTA terminal modules
15/160	**SIMATIC ET 200SP for SIMATIC PCS 7**
15/163	Interface modules and BusAdapters
15/165	BaseUnits and I/O modules
15/167	Digital I/O modules
15/170	Analog I/O modules
15/173	**SIMATIC ET 200pro for SIMATIC PCS 7**
15/175	IM 154-2 DP High Feature Interface Module
15/176	Digital electronic modules EM 141, EM 142
15/177	Analog electronic modules EM 144, EM 145
15/179	Safety-related electronic modules
15/181	Power Module PM-E
15/182	Power supply for ET 200pro

© Siemens AG 2024

Overview

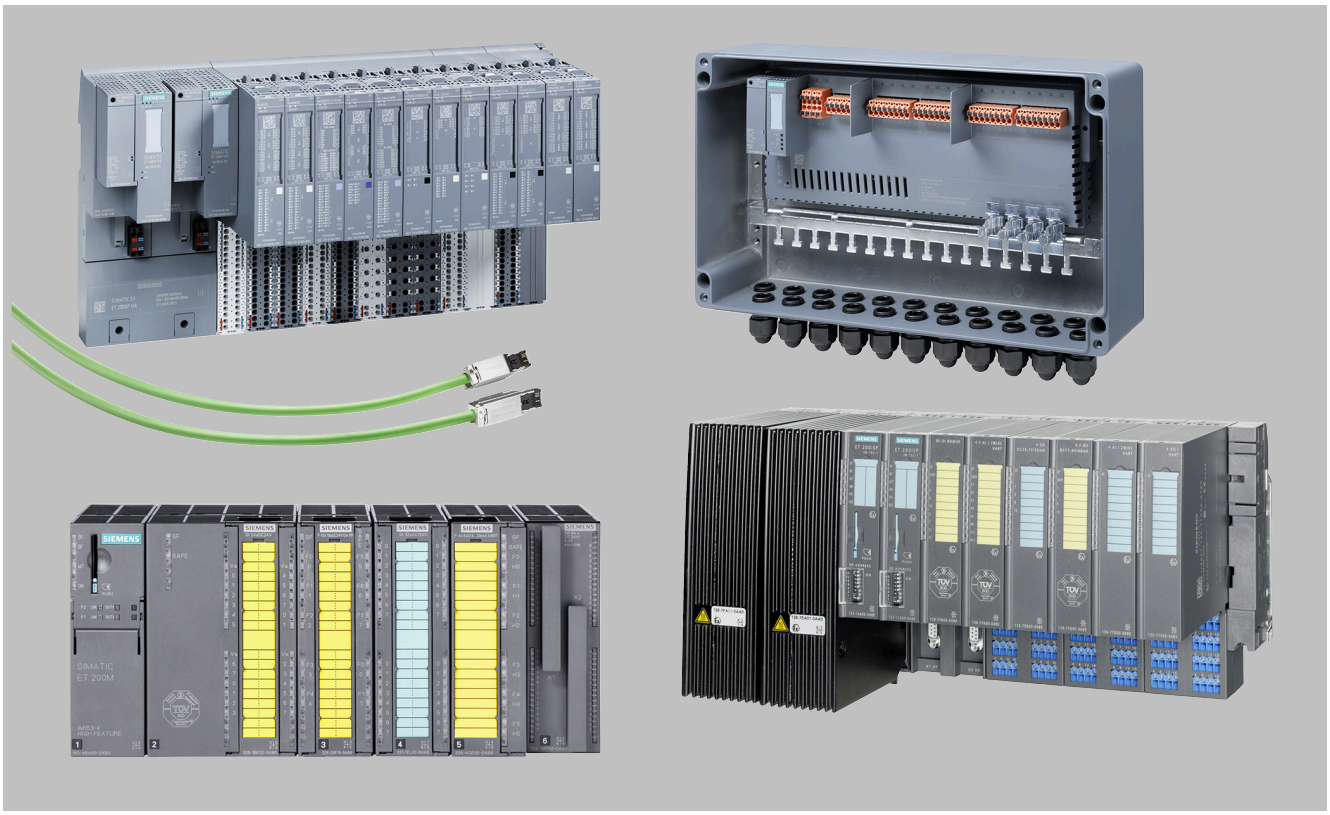

SIMATIC ET 200 remote I/O stations for SIMATIC PCS 7 (main SIMATIC ET 200SP HA, SIMATIC CFU PA, SIMATIC ET 200M and SIMATIC ET 200iSP series)

The SIMATIC PCS 7 process control system offers a variety of possibilities for detecting and outputting process signals via sensors and actuators as well as for connecting process I/O to the automation systems:

- Signal and function modules in remote I/O stations on the fieldbus
  - PROFIBUS DP (ET 200M, ET 200iSP, ET 200pro)
  - PROFINET IO (ET 200SP HA, SIMATIC CFU, ET 200M, ET 200SP)
- Analog and digital I/O modules of the SIMATIC S7-400 operated centrally in the automation system

SIMATIC S7-400 signal modules used centrally in the automation system are suitable for small applications or plants with few remote locations. In practice, however, distributed process I/Os are mainly used which, depending on the type, also support redundant configurations or operation in explosive gas/dust atmospheres:

- SIMATIC ET 200 remote I/Os in conjunction with classic field/process devices and HART field devices
- Intelligent field/process devices for direct fieldbus connection

Especially convincing arguments for distributed process I/O include:

- Modularity and consistency
- Flexible adaptability to the plant structure
- Minimum cabling and engineering requirements
- Low commissioning, service and life cycle costs
- Wide technical bandwidth

© Siemens AG 2024

Design

Comparison of distributed I/O systems for SIMATIC PCS 7

I/O system	SIMATIC CFU	ET 200SP HA	ET 200iSP	ET 200M	ET 200SP	ET 200pro
Design						
Degree of protection	IP20	IP20	IP30	IP20	IP20	IP65/IP66/IP67
Design	Compact	Modular	Modular	Modular	Discretely scalable	Modular
Assembly	Mounting rail	Mounting rail	Mounting rail	Mounting rail	Standard mounting rail	Mounting rail
Connection system for sensors/actuators	Multi-wire connection Screw-type connection	Multi-wire connection Push-in terminals	Multi-wire connection Spring-loaded/screw-type connections	Single-wire connection Spring-loaded/screw-type connections, Fast-Connect, TopConnect	Single/multi-conductor connection Push-in terminals	M8, M12, M23
Special applications						
Safety engineering	–	–	●	●	–	●
For use in hazardous areas	Zones 2, 22	Zone 2	Zones 1, 21	Zone 2	Zone 2	–
Increased availability	Redundant	Switched, redundant	Switched, redundant	Switched, redundant	–	–
Temperature range	-40 ... +70 °C (horizontal)	-40 ... +70 °C (horizontal)	-20 ... +70 °C (horizontal)	0 ... +60 °C[1] (horizontal)	0 ... +60 °C[1] (horizontal)	-25 ... +55 °C (horizontal)
Vibration resistance (continuous)	1 *g*	1 *g*	1 *g*	1 *g*	Up to 5 *g*	5 *g* (module-dependent)
Communication						
PROFIBUS (Cu/FO)	– / –	– / –	● / – (1.5 Mbps)	● / – (12 Mbps)	● / –	● / ● (12 Mbps)
PROFINET (Cu/FO)	● / ●	● / ●	– / –	● / –	● / ●	– / –
System functions						
Permanent wiring	●	●	●	● (insertion and removal)	●	–
Hot swapping	–	●	●	● (with active backplane bus)	●	●
Expansion/ configuration during ongoing operation	● / ●	● / ●	● / ●	● / ●	– / –	– / –
Diagnostics (module-dependent)	Channel-discrete	Channel-discrete	Channel-discrete	Channel-discrete	Channel-discrete	Channel-discrete
functions						
Digital channels	●	●	●	●	●	●
Analog channels	●	●	●	●	●	●
incl. HART	PROFIBUS PA	●	●	●	●	–
Motor starter	–	Available soon	–	–	–	–
Pneumatic interface	–	Available soon	●	–	–	–
Technological functions	Available soon	Available soon	Counting, frequency measuring	Counting/measuring, controlling, weighing	–	–

[1] Also available as SIPLUS component for expanded temperature range -25/-40 ... +60/+70 °C and aggressive atmosphere/condensation (details at: http://www.siemens.com/siplus)

© Siemens AG 2024

Design (continued)

Integration of process I/O in the hazardous area

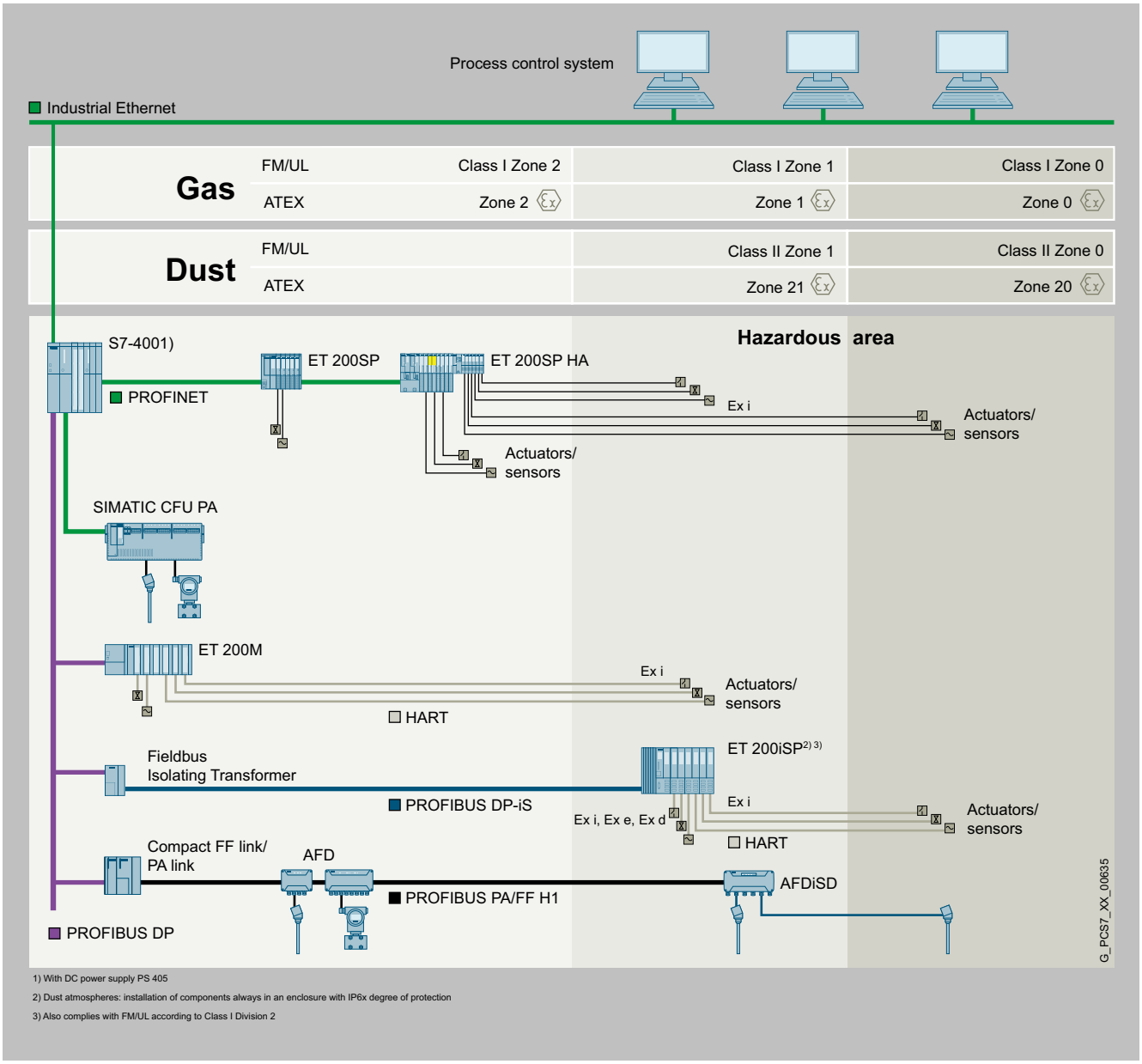

Process I/O in explosive gas and dust atmospheres

The figure shows the possible applications for the SIMATIC PCS 7 process I/O with consideration of different ambient conditions.

Field devices on the PROFIBUS PA or FOUNDATION Fieldbus H1

Field devices located in Ex zones 0, 1, 2, 20, 21 or 22 can be integrated in SIMATIC PCS 7 via various active field distributors on the PROFIBUS PA or FOUNDATION Fieldbus H1. The active field distributor AFDiSD is required for field devices in Ex zones 0, 1, 20 or 21.

ET 200iSP distributed I/O

ET 200iSP remote I/O stations suitable for gas/dust atmospheres can be installed directly in the Ex zones 1, 2, 21 or 22 as well as in non-hazardous areas. The intrinsically-safe sensors, actuators and HART field devices can also be located in zone 0 or 20 if necessary.

ET 200M, ET 200SP und ET 200SP HA distributed I/O

ET 200M, ET 200SP und ET 200SP HA remote I/O stations can be used in Ex zone 2 as well as in non-hazardous areas. The actuators/sensors can also be positioned in Ex zone 1 or 21. Special Ex I/O modules are available for this in the ET 200M product range.

ET 200pro distributed I/O

ET 200pro remote I/O stations are designed for use in non-hazardous areas.

© Siemens AG 2024

Design (continued)

Intrinsically-safe operator panel

An intrinsically-safe operator panel can be used in hazardous areas, zone 1, 2, 21 or 22, if required. For further information on this operator panel, see under SIMATIC HMI Thin Client Ex in the Catalog "Add-ons for the SIMATIC PCS 7 process control system", Section "Operator control and monitoring".

Function

Possible online modifications among the process I/Os		
Remote I/O	**PROFIBUS DP**	**PROFINET**
SIMATIC ET 200SP HA		• Adding ET 200SP HA stations • Adding I/O modules to the station • Changing the parameter settings of I/O modules • Configuration of connected HART field devices with SIMATIC PDM
SIMATIC CFU		• Adding CFU • Adding field devices to CFU • Changing the parameter settings of the CFU and connected PROFIBUS PA field devices over SIMATIC PDM
SIMATIC ET 200M	• Adding of ET 200M stations • Adding I/O modules to the station • Changing the parameter settings of I/O modules • Parameterization of connected HART field devices with SIMATIC PDM	
SIMATIC ET 200iSP	• Adding of ET 200iSP stations • Adding of modules for the station • Re-configuration of modules • Parameterization of connected HART field devices with SIMATIC PDM	
SIMATIC ET 200pro	• Adding of ET 200pro stations	
PROFIBUS DP, PROFIBUS PA, FOUNDATION Fieldbus H1	• Adding of PROFIBUS DP stations • Adding of PA links and PA field devices • Parameterization of PA or FF field devices with SIMATIC PDM	

More information

For special blocks and block libraries for integration of field/process devices in SIMATIC PCS 7, e.g. devices from drive and weighing systems, see the Industry Mall as well as Catalog ST PCS 7 AO, "Add-ons for the SIMATIC PCS 7 Process Control System".

For information and ordering data on field/process devices, drive and motor management systems from Siemens, see the Industry Mall as well as the PDF versions of the corresponding catalogs on the Internet.

© Siemens AG 2024

Overview

Signal modules from the SIMATIC S7-400 range can be used in the SIMATIC PCS 7 automation system if necessary. These are primarily an alternative to use of distributed I/Os in the case of small applications or systems with a small distributed configuration.

© Siemens AG 2024

Overview

Signal modules from the SIMATIC S7-400 range can be used in the SIMATIC PCS 7 automation system if necessary. These are primarily an alternative to use of distributed I/Os in the case of small applications or systems with a small distributed configuration.

For SIMATIC PCS 7, the I/O modules listed in the Ordering data have been selected from the range of S7-400 signal modules.

Notes:

Apart from these selected modules it is also possible to use - with limitations in functions - all other I/O modules from the current range of S7-400 signal modules.

All process data from the I/O are available for PCS 7 engineering in the CFC, and can be graphically interconnected to the signal name in the signal list. Diagnostics information is generated automatically when using the I/O modules listed here.

When using other I/O modules, integration in SIMATIC PCS 7 is limited to the process data, i.e. the full scope of diagnostics functions is not automatically available. These modules can therefore only be used meaningfully in SIMATIC PCS 7 if the diagnostics capability can be omitted.

Online modifications and redundancy are not supported by the central I/O.

Selection and ordering data

SM 421 digital input modules	
• 32 inputs, 24 V DC	6ES7421-1BL01-0AA0
• 32 inputs, 120 V AC/DC	6ES7421-1EL00-0AA0
• 16 inputs, 24 V DC, with process/diagnostics interrupt	6ES7421-7BH01-0AB0
• 16 inputs, 24 to 60 V AC/DC, with hardware/diagnostics interrupt	6ES7421-7DH00-0AB0
• 16 inputs, 120/230 V AC/DC, inputs according to IEC 1131-2 Type 2	6ES7421-1FH20-0AA0
SM 422 digital output modules	
• 32 outputs; 24 V DC, 0.5 A	6ES7422-1BL00-0AA0
• 32 outputs; 24 V DC, 0.5 A; with diagnostics	6ES7422-7BL00-0AB0
• 16 outputs; 24 V DC, 2 A	6ES7422-1BH11-0AA0
• 16 outputs; relay contacts	6ES7422-1HH00-0AA0
• 16 outputs; 120/230 V AC, 2 A	6ES7422-1FH00-0AA0
SM 431 analog input modules	
• 16 inputs, non-isolated, 13-bit	6ES7431-0HH00-0AB0
• 8 inputs, isolated, 13-bit	6ES7431-1KF00-0AB0
• 8 inputs, isolated, 14-bit, with linearization (RTD/TC)	6ES7431-1KF10-0AB0
• 8 inputs, isolated, 14-bit	6ES7431-1KF20-0AB0
• 16 inputs, isolated, 16-bit; process interrupt capability, with diagnostics interrupt	6ES7431-7QH00-0AB0
• 8 inputs, isolated, 16-bit; process interrupt capability, for thermocouples, with diagnostics interrupt	6ES7431-7KF00-0AB0
• 8 inputs, isolated, 16-bit; process interrupt capability, for thermal resistors, with diagnostics interrupt	6ES7431-7KF10-0AB0
SM 432 analog output modules	
• 8 outputs, isolated, 13 bits; for ±10 V, 0 ... 10 V, 1 ... 5 V, ±20 mA, 0 ... 20 mA, 4 ... 20 mA	6ES7432-1HF00-0AB0
Front connector (1 unit)	
• With screw contacts	6ES7492-1AL00-0AA0
• With spring clamps	6ES7492-1BL00-0AA0
• With crimp contacts	6ES7492-1CL00-0AA0

Technical specifications

You can find the detailed technical data of the S7-400 modules at the following points:

- Catalog ST 400 or
- Industry Mall/CA 01 under "Automation technology – Automation systems – SIMATIC industrial automation systems – Controllers – Advanced Controller – S7-400/S7-400H/S7-400F/FH"

© Siemens AG 2024

Overview

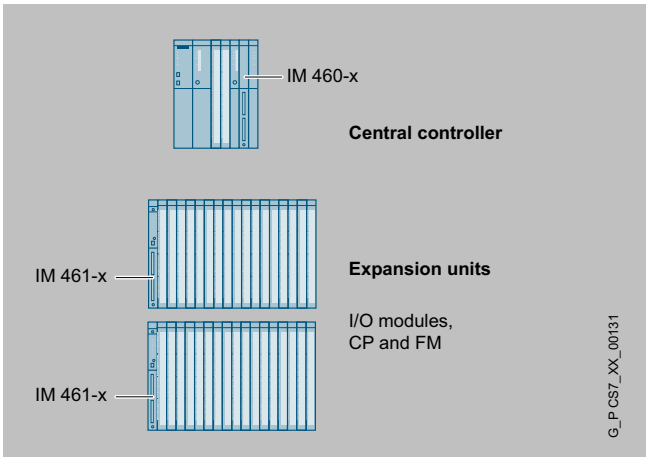

Expansion units can be used for the distributed expansion of the SIMATIC S7-400. The IM 460-x interface modules are used as the interface for these expansion units.

Limitation compared to standard input/output modules of ET 200M

- No redundant interfacing of expansion units
- No configuration during operation

Racks

The universal racks (UR) are used for SIMATIC PCS 7. They can be used as central racks and as expansion racks. For other racks, see Catalog ST 400.

Selection and ordering data

IM 460-0 interface module • Transmitter module for central controller • Without transmission of voltage to the expansion unit • Cable up to 5 m long • With K-bus for communication with CPs and FMs in the expansion unit • For connecting as many as 8 expansion units	**6ES7460-0AA01-0AB0**
IM 461-0 interface module Corresponding receiver module for the expansion unit	**6ES7461-0AA01-0AA0**
IM 460-1 interface module • Transmitter module for central controller • With transmission of the 5 V supply for I/O modules • Cable up to 1.5 m long • Without transmission of the K-bus, hence solely for communication from I/O modules	**6ES7460-1BA01-0AB0**
IM 461-1 interface module Corresponding receiver module for the expansion unit	**6ES7461-1BA01-0AA0**
IM 460-3 interface module • Transmitter module for central controller • Without transmission of voltage to the expansion unit • Cable up to 100 m long • With K-bus for communication with CPs and FMs in the expansion unit • For connecting as many as 8 expansion units	**6ES7460-3AA01-0AB0**
IM 461-3 interface module Corresponding receiver module for the expansion unit	**6ES7461-3AA01-0AA0**
UR1 rack for central and expansion units • 18 slots • Suitable for redundant power supply	**6ES7400-1TA01-0AA0**
UR2 rack for central and expansion units • 9 slots • Suitable for redundant power supply	**6ES7400-1JA01-0AA0**
Accessories	
468-1 connecting cable for connecting IM 460-0 and IM 461-0; IM 460-3 and IM 461-3	
• 0.75 m	**6ES7468-1AH50-0AA0**
• 1.5 m	**6ES7468-1BB50-0AA0**
• 5 m	**6ES7468-1BF00-0AA0**
Additional lengths for connecting IM 460-3 and IM 461-3	
• 10 m	**6ES7468-1CB00-0AA0**
• 25 m	**6ES7468-1CC50-0AA0**
• 50 m	**6ES7468-1CF00-0AA0**
• 100 m	**6ES7468-1DB00-0AA0**
Terminator for IM 461-0	**6ES7461-0AA00-7AA0**

© Siemens AG 2024

Selection and ordering data (continued)

468-3 connecting cable for connecting IM 460-1 and IM 461-1	
• 0.75 m	**6ES7468-3AH50-0AA0**
• 1.5 m	**6ES7468-3BB50-0AA0**

© Siemens AG 2024

Overview

SITOP modular

A reliable 24-V power supply is a basic condition for every plant operation. With MTBF ratings of up to 1 million hours at full load in continuous operation, SITOP power supplies meet the particularly stringent requirements for process automation.

For world-wide use, the single-phase, 2-phase or 3-phase DIN rail devices provide a wide ambient temperature range of -25 ... +70 °C as well as comprehensive international approvals such as ATEX, Class I Div2, IECex or GL.

The innovative SITOP PSU8600 power supply system can be fully integrated in the plant via PROFINET and thereby offers completely new configuration and diagnostic capabilities. It is thus possible to individually adjust and monitor the voltage and current of each output. For the first time, users have access to information about the control circuit including energy flow data.

SITOP add-on modules and UPS1600

24-V power units with output capacities up to 1000 W can be individually adapted to the plant configuration and plant expansion and combined with redundancy, selectivity or DC USP modules. This means that you can expand the system to even include complete all-round protection.

The SITOP library is available with blocks and faceplates for direct integration into SIMATIC PCS 7. This means that PCS 7 users automatically receive information about operating states, maintenance requirements (e.g. battery replacement) and faults (e.g. power failure, short-circuit or overload in 24V circuits).

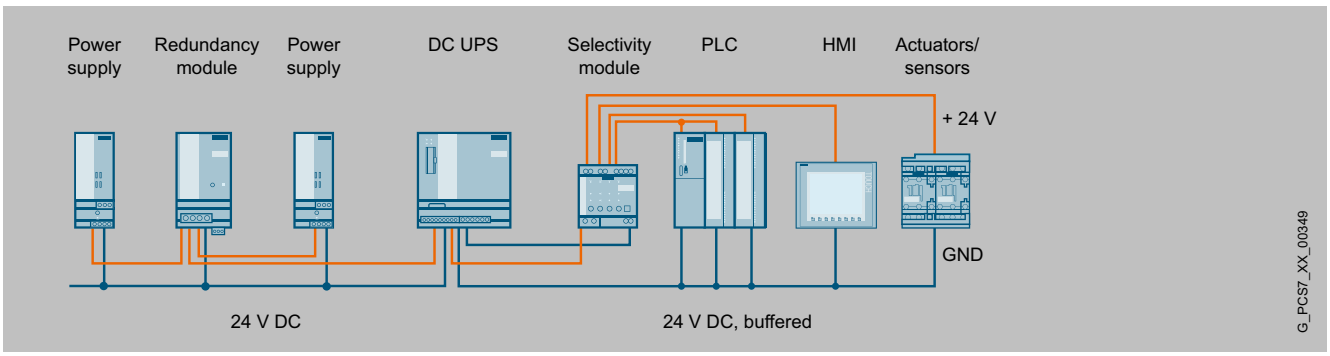

24 V DC power supply with add-on modules and DC UPS

© Siemens AG 2024

More information

You can find detailed information and technical specifications for the 1-phase, 2-phase and 3-phase SITOP modular power supplies, for the SITOP PSU8600 power supply system, for the redundancy, buffer and selectivity modules, as well as for corresponding 24 V DC uninterruptible power supplies in the Catalog KT 10.1.

Additional information is available via the Internet at:

- SITOP power supplies:
  http://www.siemens.com/sitop
- CAx data (2D, 3D, circuit diagram macros):
  http://www.siemens.com/sitop-cax
- Operating instructions:
  http://www.siemens.com/sitop/manuals

SITOP Selection Tool

The SITOP Selection Tool helps you to select the power supply and DC UPS for your specific application quickly and easily:
http://www.siemens.com/tst

SITOP library for SIMATIC PCS 7

SIMATIC PCS 7 V8.0 with SP2, V8.1, V8.1 with SP1, V8.2 are supported.
https://support.industry.siemens.com/cs/ww/en/view/109476154

SIMATIC PCS 7 Standard Architectures manual (chapter 18, 24 V DC supply concepts)

https://support.industry.siemens.com/cs/ww/en/view/109739629

Application example: Integration of a SITOP 24 V power supply in SIMATIC PCS 7

https://support.industry.siemens.com/cs/ww/en/view/109481908

© Siemens AG 2024

Overview

SITOP PSU8200 1-phase, 24 V, 10 A

- 24 V DC/5 A, 10 A, 20 A and 40 A
- 1-phase wide-range input allows connection to any supply system and ensures safety in the case of voltage supply deviations
- Extremely slim design – no lateral installation clearances required
- Power Boost with 3 times the rated current (for 25 ms) for tripping protective devices
- Extra power with 1.5 times the rated current (5 s/min) for brief, operational overload
- Optional short-circuit behavior between constant current and restart
- Optional symmetrical load distribution for parallel operation
- Operating status display on 3 LEDs
- Extremely high efficiency up to 94%
- Large temperature range from -25 °C to +70 °C
- Comprehensive certifications, such as cULus, ATEX, IECex or GL
- Direct integration in SIMATIC PCS 7 via SITOP library

© Siemens AG 2024

Design

Product overview

Modules		Variants	Input	Output
Power supplies				
	SITOP modular, 1-phase, 24 V DC	PSU8200, 5 A PSU8200, 10 A	120/230 V AC 120/230 V AC	24 V DC, 5 A 24 V DC, 10 A
	SITOP modular, 1-phase, 24 V DC	PSU8200, 20 A PSU8200, 40 A	120 ... 230 V AC/DC 120/230 V AC	24 V DC, 20 A 24 V DC, 40 A

Selection and ordering data

SITOP modular power supplies, 1-phase, 24 V DC	
SITOP PSU8200, 1-phase, 24 V DC, 5 A Stabilized power supply Input: 120/230 V AC Output: 24 V DC/5 A	**6EP3333-8SB00-0AY0**
SITOP PSU8200, 1-phase, 24 V DC, 10 A Stabilized power supply Input: 120/230 V AC Output: 24 V DC/10 A	**6EP3334-8SB00-0AY0**
SITOP PSU8200, 1-phase, 24 V DC, 20 A Stabilized power supply Input: 120 ... 230 V AC / 110 ... 220 V DC Output: 24 V DC/20 A	**6EP1336-3BA10**
SITOP PSU8200, 1-phase, 24 V DC, 40 A Stabilized power supply Input: 120/230 V AC Output: 24 V DC/40 A	**6EP3337-8SB00-0AY0**

© Siemens AG 2024

Overview

SITOP PSU200M 24 V, 10 A

- 24 V DC/5 A and 10 A, also available as version with PCB with protective coating.
- 1-phase and 2-phase ultra-wide input range
- Extremely slim design – no lateral installation clearances required
- Power Boost with 3 times the rated current (for 25 ms) for tripping protective devices
- Extra power with 1.5 times the rated current (5 s/min) for brief, operational overload
- Optional short-circuit behavior between constant current and restart
- Optional symmetrical load distribution for parallel operation
- Operating status display on 3 LEDs
- High degree of efficiency of up to 91%
- Large temperature range from -25 °C to +70 °C
- Comprehensive certifications, such as cULus, ATEX, IECex or GL
- Direct integration in SIMATIC PCS 7 via SITOP library

Design

Product overview

Modules		Versions	Input	Output
Power supplies				
	SITOP modular, 1-phase and 2-phase, 24 V DC	PSU200M, 5 A	120/230 ... 500 V AC	24 V DC, 5 A
		PSU200M, 10 A	120/230 ... 500 V AC	24 V DC, 10 A
	SITOP modular PLUS, 1-phase and 2-phase, 24 V DC, with protective coating	PSU200M, 5 A	120/230 ... 500 V AC	24 V DC, 5 A
		PSU200M, 10 A	120/230 ... 500 V AC	24 V DC, 10 A

© Siemens AG 2024

Selection and ordering data

SITOP modular power supplies, 1-phase and 2-phase, 24 V DC	
SITOP PSU200M, 1-phase and 2-phase, 24 V DC, 5 A Stabilized power supply Input: 120 ... 230 V / 230 ... 500 V AC Output: 24 V DC/5 A	6EP1333-3BA10
SITOP PSU200M PLUS, 1-phase and 2-phase, 24 V DC, 5 A Stabilized power supply Input: 120 ... 230 V / 230 ... 500 V AC Output: 24 V DC/5 A Version with protective coating	6EP1333-3BA10-8AC0
SITOP PSU200M, 1-phase and 2-phase, 24 V DC, 10 A Stabilized power supply Input: 120 ... 230 V / 230 ... 500 V AC Output: 24 V DC/10 A	6EP1334-3BA10
SITOP PSU200M PLUS, 1-phase and 2-phase, 24 V DC, 10 A Stabilized power supply Input: 120 ... 230 V / 230 ... 500 V AC Output: 24 V DC/10 A Version with protective coating	6EP1334-3BA10-8AB0

© Siemens AG 2024

Overview

SITOP PSU8200 3-phase, 24 V, 20 A

- 24 V DC/20 A and 40 A
- 3-phase wide-range input from 320 to 575 V AC for global use
- Extremely slim design – no lateral installation clearances required
- Power Boost with 3 times the rated current (for 25 ms) for tripping protective devices
- Extra power with 1.5 times the rated current (5 s/min) for brief, operational overload
- Optional short-circuit behavior between constant current and restart
- Optional symmetrical load distribution for parallel operation
- Operating status display on 3 LEDs
- Extremely high efficiency up to 94%
- Large temperature range from -25 °C to +70 °C
- Comprehensive certifications, such as cULus, ATEX, IECex and GL
- Direct integration in SIMATIC PCS 7 via SITOP library

© Siemens AG 2024

Design

Product overview

Modules		Versions	Input	Output
Power supplies				
	SITOP modular, 3-phase, 24 V DC	PSU8200, 20 A	3 AC 400 ... 500 V	24 V DC, 20 A
		PSU8200, 40 A	3 AC 400 ... 500 V	24 V DC, 40 A

Selection and ordering data

SITOP modular power supplies, 3-phase, 24 V DC	
SITOP PSU8200, 3-phase, 24 V DC, 20 A Stabilized power supply Input: 3 AC 400 ... 500 V Output: 24 V DC/20 A	**6EP3436-8SB00-0AY0**
SITOP PSU8200, 3-phase, 24 V DC, 40 A Stabilized power supply Input: 3 AC 400 ... 500 V Output: 24 V DC/40 A	**6EP1437-3BA10**

© Siemens AG 2024

Overview

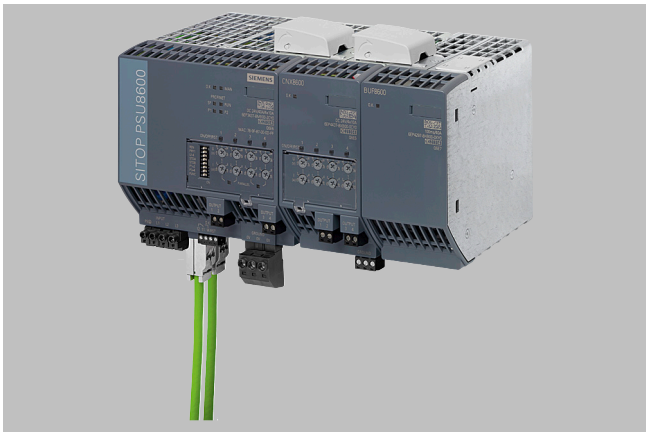

The unique SITOP PSU8600 power supply system sets new standards for industrial power supplies. Voltage and current response thresholds can be set individually for each output of this power supply system. Selective monitoring of each output for overload also enables fast fault location. Depending on requirements, additional modules from the modular system can be added without wiring overhead, for example, to buffer against transient power failures.

Comprehensive diagnostic and maintenance information is available via PROFINET and can be evaluated and visualized directly in SIMATIC PCS 7. Optimal support is also provided for energy management of a plant: From the acquisition of energy data from individual outputs, the specific activation and deactivation of outputs via PROFIenergy, to direct integration in power management systems.

Special features

- Reduced space requirement and costs due to multiple integrated outputs with selective monitoring
- Individually configurable outputs (voltage from 5 V to 28 V, power response threshold value from 0.5 A to 5 A or 10 A)
- Compensation for power losses can be set separately for each output
- Narrow width without lateral installation clearances
- Low temperature rise in the control cabinet due to very high efficiency
- Two integrated Ethernet/PROFINET ports (no external switch required)
- OPC UA Server functionality for parameter assignment and data communication
- Can be added without wiring overhead (more outputs, buffer module for bridging transient power failures)
- Preventive maintenance reduces downtimes
- Energy savings during breaks through targeted switching of outputs (via STEP 7 program or PROFIenergy profile)
- SIMATIC S7 function blocks for easy integration in STEP 7 user programs and faceplates for operator control and monitoring.
- Direct integration in SIMATIC PCS 7 via SITOP library

© Siemens AG 2024

Design

Product overview

Modules		Versions	Input	Output
PSU8600 basic units				
	SITOP power supply system, 3-phase, 24 V DC	PSU8600, 20 A PSU8600, 40 A	3 AC 400 to 500 V 3 AC 400 to 500 V	24 V DC, 20 A 24 V DC, 40 A
		PSU8600, 20 A/5 × 4 A PSU8600, 40 A/5 × 10 A	3 AC 400 to 500 V 3 AC 400 to 500 V	24 V DC, 20 A/4 × 5 A 24 V DC, 40 A/4 × 10 A
CNX8600 for expanding outputs				
	SITOP CNX8600 4 × 5 A expansion module SITOP CNX8600 4 × 10 A expansion module	CNX8600, 4 × 5 A CNX8600, 4 × 10 A	24 V DC 24 V DC	24 V DC, 4 × 5 A 24 V DC, 4 × 10 A
BUF8600 buffer				
	SITOP BUF8600 buffer module	BUF8600, 100 ms/40 A BUF8600, 300 ms/40 A BUF8600, 4 s/40 A BUF8600, 10 s/40 A	24 V DC	24 V DC, 40 A

© Siemens AG 2024

Selection and ordering data

SITOP PSU8600 3-phase, 24 V DC/20 A with PN/IE connection Stabilized power supply Input: 3 AC 400 ... 500 V Output: 24 V DC/20 A	6EP3436-8SB00-2AY0
SITOP PSU8600 3-phase, 24 V DC/40 A with PN/IE connection Stabilized power supply Input: 3 AC 400 ... 500 V Output: 24 V DC/40 A	6EP3437-8SB00-2AY0
SITOP PSU8600 3-phase, 24 V DC/20 A/4 × 5 A with PN/IE connection Stabilized power supply Input: 3 AC 400 ... 500 V Output: 24 V DC/20 A	6EP3436-8MB00-2CY0
SITOP PSU8600 3-phase, 24 V DC/40 A/4 × 10 A with PN/IE connection Stabilized power supply Input: 3 AC 400 ... 500 V Output: 24 V DC / 40 A/4 × 10 A	6EP3437-8MB00-2CY0
SITOP CNX8600 4 × 5 A expansion module For SITOP PSU8600 Output: 24 V DC / 4 × 5 A	6EP4436-8XB00-0CY0
SITOP CNX8600 4 × 10 A expansion module For SITOP PSU8600 Output: 24 V DC / 4 × 10 A	6EP4437-8XB00-0CY0
SITOP BUF8600 100 ms buffer module For SITOP PSU8600 Buffer capacity 100 ms/40 A	6EP4297-8HB00-0XY0
SITOP BUF8600 300 ms buffer module For SITOP PSU8600 Buffer capacity 300 ms/40 A	6EP4297-8HB10-0XY0
SITOP BUF8600 4 s buffer module For SITOP PSU8600 Buffer capacity 4 s/40 A	6EP4293-8HB00-0XY0
SITOP BUF8600 10 s buffer module For SITOP PSU8600 Buffer capacity 10 s/40 A	6EP4295-8HB00-0XY0

© Siemens AG 2024

Overview

Redundancy modules

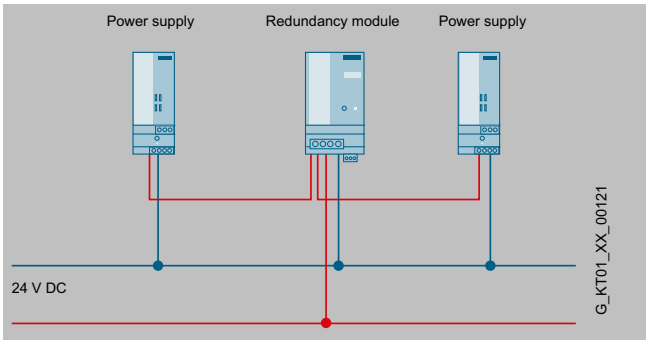

SITOP redundancy modules

- High availability of the 24 V DC supply thanks to redundant configuration
- Decoupling of two power supplies of the same type in parallel operation via diodes
- 24 V DC power supply is maintained in the event of a power failure
- Compact redundancy modules for power supply units up to 40 A
- Diagnostic signal via LED and signaling contacts
- Adjustable switching threshold for LED and signaling contacts
- Direct integration in SIMATIC PCS 7 via SITOP library

Buffer module

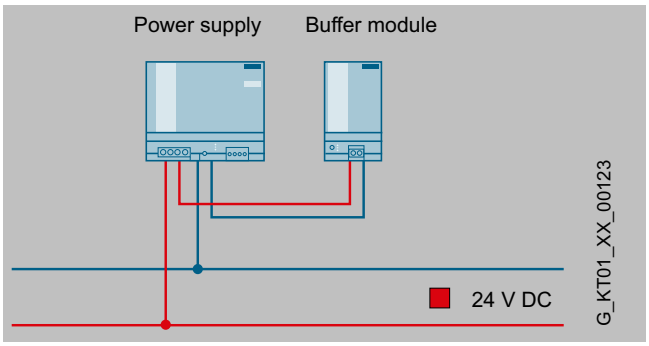

SITOP buffer module

- Buffering the load current during brief power interruptions
- Maintenance-free capacitors with short charging times as energy storage units
- Wiring parallel to the output of the power supply
- Parallel switching of several buffer modules possible
- A supply voltage > 20.5 V is signaled by an LED on the device.
- Buffer time up to: 200 ms at 40 A, 400 ms at 20 A, 800 ms at 10 A, 1.6 s at 5 A load current

Overview (continued)

Selectivity modules

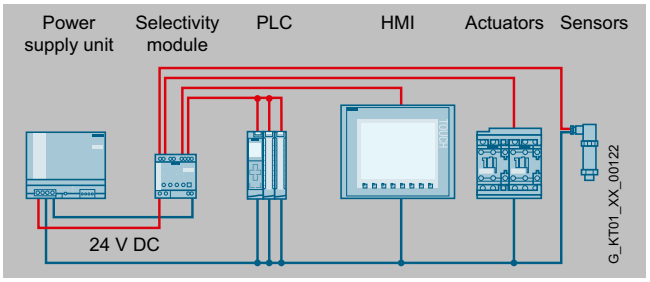

SITOP selectivity modules

- Distribution of the load current over up to 4 current circuits with individually adjustable maximum current
- Monitoring of individual partial currents
- Reliable tripping regardless of cable lengths and cross-sections
- Selective cutoff of current circuits at overload or short-circuit
- Simple commissioning thanks to manual switch on/off of outputs
- Sequential connection delay of feeders reduces total inrush current
- Sealable transparent cover over adjusters for currents and times protect against maladjustment
- Remote reset possible from a central location
- Signaling via LEDs (channel-by-channel) and remote diagnostics via common signaling contact or single-channel signaling
- Evaluation of the status of 4 current circuits of selectivity modules with single-channel signaling via SIMATIC S7 function blocks.
- Direct integration in SIMATIC PCS 7 via SITOP library

© Siemens AG 2024

Design

Product overview

Modules		Versions	Input	Output
Redundancy modules				
	SITOP redundancy module PSE202U	24 V DC, 40 A 24 V DC, 10 A	24 V DC 24 V DC	U_e – approx. 0.5 V U_e – approx. 0.5 V
Buffer module				
	SITOP buffer module	--	24 V DC	Ue - approx. 1 V
Selectivity modules				
	SITOP selectivity module PSE200U, 3 A, 4-channel, 4 × 3 A Adjustable output current: 0.5 ... 3 A	With common signal contact NEC Class 2 with common signal contact With single-channel signaling NEC Class 2 with single-channel signaling	24 V DC	Ue - approx. 0.2 V
	SITOP selectivity module PSE200U, 10 A, 4-channel, 4 × 10 A Adjustable output current: 3 ... 10 A	Without single-channel signaling (common signaling contact) With single-channel signaling	24 V DC	Ue - approx. 0.2 V

© Siemens AG 2024

Selection and ordering data

Add-on modules for SITOP modular power supplies	
Redundancy modules	
Redundancy module SITOP PSE202U, 24 V DC/40 A Suitable for decoupling two SITOP power supplies each with a maximum of 20 A output current Input: 24 V DC Output: Ue - approx. 0.5 V	6EP1961-3BA21
Redundancy module SITOP PSE202U, 24 V DC/10 A Suitable for decoupling two SITOP power supplies each with a maximum of 5 A output current Input: 24 V DC Output: Ue - approx. 0.5 V	6EP1964-2BA00
Buffer module	
SITOP PSE201U buffer module For SITOP modular and SITOP smart buffer time 100 ms to 10 s, depending on load current Input: 24 V DC Output: Ue - approx. 1 V	6EP1961-3BA01
Selectivity modules	
SITOP PSE200U selectivity module, 3 A 4-channel (4 × 3 A) Input: 24 V DC Output: Ue – approx. 0.2 V Adjustable output current 0.5 to 3 A	
• With common signal contact	6EP1961-2BA11
• NEC Class 2 with common signal contact	6EP1961-2BA51
• With single-channel signaling	6EP1961-2BA31
• NEC Class 2 with single-channel signaling	6EP1961-2BA61
SITOP PSE200U selectivity module, 10 A 4-channel (4 × 10 A) Input: 24 V DC Output: Ue – approx. 0.2 V Adjustable output current 3 to 10 A	
• Without single-channel signaling (common signaling contact)	6EP1961-2BA21
• With single-channel signaling	6EP1961-2BA41

© Siemens AG 2024

Overview

SITOP DC UPS with capacitors

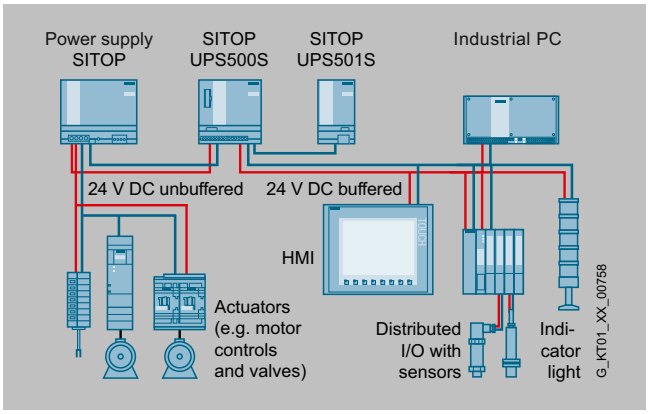

- Buffering of 24 V DC up to 15 A
- Buffering of power failures for up to several minutes enables data backup and controlled shutdown
- Ambient temperatures up to +60 °C
- Short charging times
- Maintenance-free operation and long lifetime, also at high temperatures
- Status messages via LEDs and floating signaling contacts
- Communication with controller/IPC via USB
- Extension of the buffer time with up to 3 expansion modules

SITOP UPS1600 DC UPS modules with UPS1100 battery modules

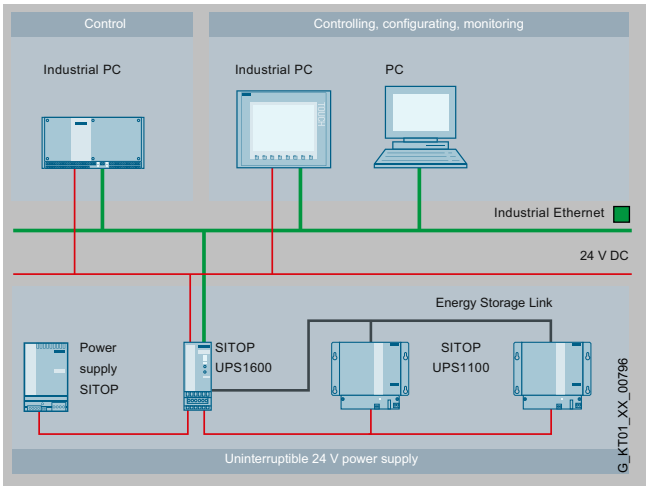

- High-performance DC UPS modules in space-saving, slim design
- 24 V DC buffering for a few hours for the purpose of continuing processes
- High overload capability for mains and buffer mode
- Starting from the battery module supports stand-alone mode, e.g. for starting generators

Overview (continued)

- Open communication via USB or two Ethernet/ PROFINET ports; OPC UA Server functionality for parameter assignment and data communication
- Easy configuration thanks to automatic detection of battery modules
- High reliability and availability due to monitoring of the operational readiness, battery feed, aging and charging status
- Battery-saving charging due to temperature-specific charging characteristic
- Defined shutdown of several IPCs or controllers on one UPS (versions with Ethernet/PROFINET)
- Remote monitoring via integrated web server (versions with Ethernet/PROFINET)
- SIMATIC S7 function blocks for easy integration in STEP 7 user programs and faceplates for operator control and monitoring.
- Direct integration in SIMATIC PCS 7 via SITOP library

The intelligent UPS1600 battery management charges the UPS1100 with the optimal, temperature-controlled charging characteristics and monitors the status (operating data and diagnostic information) of the connected battery modules via the energy storage link. For longer backup times, up to six same type battery modules can be connected in parallel.

© Siemens AG 2024

Design

Product overview

Modules		Versions	Input	Output
Uninterruptible 24 V DC power supplies				
SITOP DC UPS with capacitors				
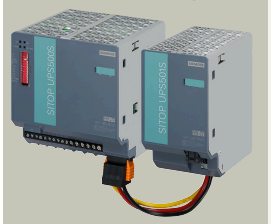	SITOP DC UPS basic device UPS500S, 15 A, IP20, can be expanded with SITOP UPS501S	Power 2.5 KW Power 5 KW	24 V DC (22 ... 29 V)	24 V DC (23.3 ... 24.7 V DC or 24 V ± 3 %)
	SITOP DC UPS expansion module UPS501S, 7 A	Power 5 KW	24 V DC	24 V DC
	SITOP DC UPS basic device UPS500P, 7 A, IP65, cannot be expanded	Power 5 KW Power 10 KW	24 V DC (22.5 ... 29 V)	24 V DC (23.3 ... 24.7 V DC or 24 V ± 3 %)
SITOP DC UPS with battery modules				
SITOP UPS1600 DC UPS, can be combined with SITOP UPS1100 battery modules				
	SITOP UPS1600 24 V/10 A	Without communications interface USB interface 2 Ethernet/PROFINET interfaces	24 V DC (21 ... 29 V)	Normal mode: U_e – approx. 0.01 × I Buffer mode: 27 V DC (no load); 24 V (50% battery rated current); 22 V (100 % battery rated current); 18.5 V (exhaustive discharge protection)
	SITOP UPS1600 24 V/20 A	Without communications interface USB interface 2 Ethernet/PROFINET interfaces		
	SITOP UPS1600 24 V/40 A	Without communications interface USB interface 2 Ethernet/PROFINET interfaces		
SITOP UPS1100 battery modules for SITOP UPS1600 DC UPS modules				
	SITOP UPS1100 battery module for SITOP UPS1600, 10 A	24 V DC, 1.2 Ah 24 V DC, 2.5 Ah, high temperature	--	24 V DC, 22 ... 27.0 V DC (no load)
	SITOP UPS1100 battery module for SITOP UPS1600, 10 A and 20 A	24 V DC, 3.2 Ah 24 V DC, 7 Ah	--	24 V DC, 22 ... 27.0 V DC (no load)
		24 V DC, 5 Ah LIFePo		24 V DC, 22 ... 28.8 V DC (no load)
	SITOP UPS1100 battery module for SITOP UPS1600, 20 A and 40 A	24 V DC, 12 Ah	--	24 V DC, 22 ... 27.0 V DC (no load)

SITOP Selection Tool

The SITOP Selection Tool offers detailed selection guidance according to criteria such as the required backup time, load current, peak current and battery connection threshold:

http://www.siemens.com/tst

© Siemens AG 2024

Selection and ordering data

Uninterruptible 24 V DC power supplies	
DC UPS with capacitors	
DC UPS basic device SITOP UPS500S, 15 A Degree of protection IP20, input: 24 V DC; Output: 24 V DC; USB port; can be expanded with SITOP UPS501S	
• Power 2.5 KW	**6EP1933-2EC41**
• Power 5 KW	**6EP1933-2EC51**
DC UPS expansion module SITOP UPS501S, 7 A For connection to the basic device; Input: 24 V DC; Output: 24 V DC; power 5 KW	**6EP1935-5PG01**
DC UPS basic device SITOP UPS500P, 7 A Degree of protection IP65, input: 24 V DC; Output: 24 V DC; USB port; cannot be expanded	
• Power 5 KW	**6EP1933-2NC01**
• Power 10 KW	**6EP1933-2NC11**
SITOP UPS1600 DC UPS can be combined with SITOP UPS1100 battery module	
DC UPS module SITOP UPS1600, 24 V/10 A Input: 24 V DC; Output: 24 V DC	
• Without communications interface	**6EP4134-3AB00-0AY0**
• With USB interface	**6EP4134-3AB00-1AY0**
• With 2 Ethernet/PROFINET interfaces	**6EP4134-3AB00-2AY0**
DC UPS module SITOP UPS1600, 24 V/20 A Input: 24 V DC; Output: 24 V DC	
• Without communications interface	**6EP4136-3AB00-0AY0**
• With USB interface	**6EP4136-3AB00-1AY0**
• With 2 Ethernet/PROFINET interfaces	**6EP4136-3AB00-2AY0**
DC UPS module SITOP UPS1600, 24 V/40 A Input: 24 V DC; Output: 24 V DC	
• Without communications interface	**6EP4137-3AB00-0AY0**
• With USB interface	**6EP4137-3AB00-1AY0**
• With 2 Ethernet/PROFINET interfaces	**6EP4137-3AB00-2AY0**
SITOP UPS1100 battery module for DC UPS module SITOP UPS1600	
Battery module SITOP UPS1100 24 V/1.2 Ah With maintenance-free, sealed rechargeable lead batteries for DC UPS module SITOP UPS1600, 10 A	**6EP4131-0GB00-0AY0**
Battery module SITOP UPS1100 24 V/3.2 Ah With maintenance-free, sealed rechargeable lead batteries for DC UPS module SITOP UPS1600, 10 A and 20 A	**6EP4133-0GB00-0AY0**
Battery module SITOP UPS1100 24 V/7 Ah With maintenance-free, sealed rechargeable lead batteries for DC UPS module SITOP UPS1600, 10 A and 20 A	**6EP4134-0GB00-0AY0**

Selection and ordering data (continued)

Battery module SITOP UPS1100 24 V/5 Ah With maintenance-free, sealed lithium-ion rechargeable batteries for DC UPS module SITOP UPS1600, 10 A and 20 A	**6EP4133-0JB00-0AY0**
Battery module SITOP UPS1100 24 V/12 Ah With maintenance-free, sealed rechargeable lead batteries for DC UPS module SITOP UPS1600, 20 A and 40 A	**6EP4135-0GB00-0AY0**
SITOP UPS 1100 battery module 2.5 Ah, high temperature With maintenance-free, sealed rechargeable pure-lead batteries for DC UPS module SITOP UPS1600, 10 A	**6EP4132-0GB00-0AY0**

© Siemens AG 2024

Overview

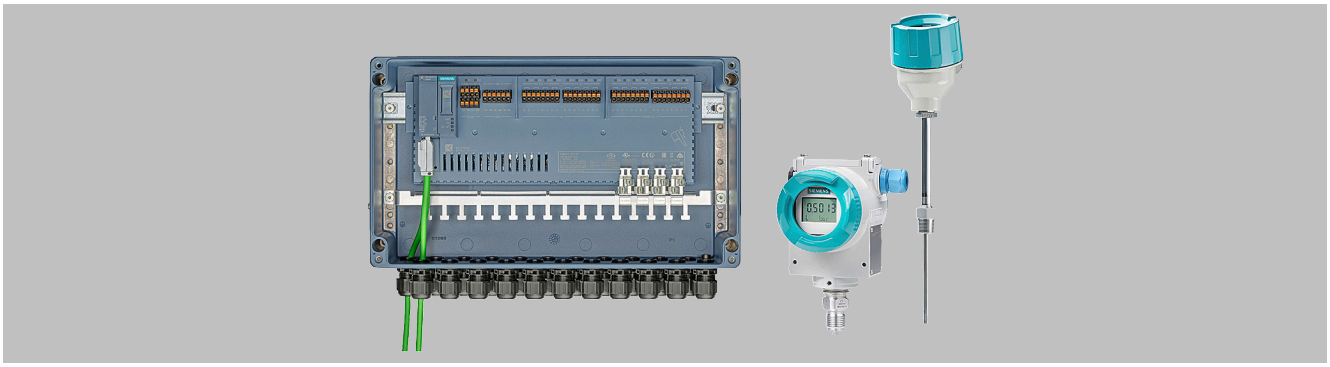

Smart Field Distributor – SIMATIC Compact Field Unit

With the new SIMATIC Compact Field Unit (CFU), we are re-interpreting the conventional approach to field device connection. The smart field distributor is installed at the process level and is connected via PROFINET, the world's leading Industrial Ethernet standard, directly to the automation system to form the foundation for digitalization in the field.

You benefit from greater flexibility and very simple handling coupled with maximum availability. This allows you to efficiently transfer your familiar system concept to the digital world.

Today's challenges for field device connection:

- High overhead for device integration and replacement
- Complicated, error-prone wiring and routing over multiple levels, making the hardware FAT very complex
- Extremely long copper cables and numerous terminal points in the field
- Multiple individual control cabinets
- Large numbers of different components and protocols necessitate costly spare parts inventories and training sessions
- High planning and documentation costs

SIMATIC CFU – The answer to these challenges

Mode of operation

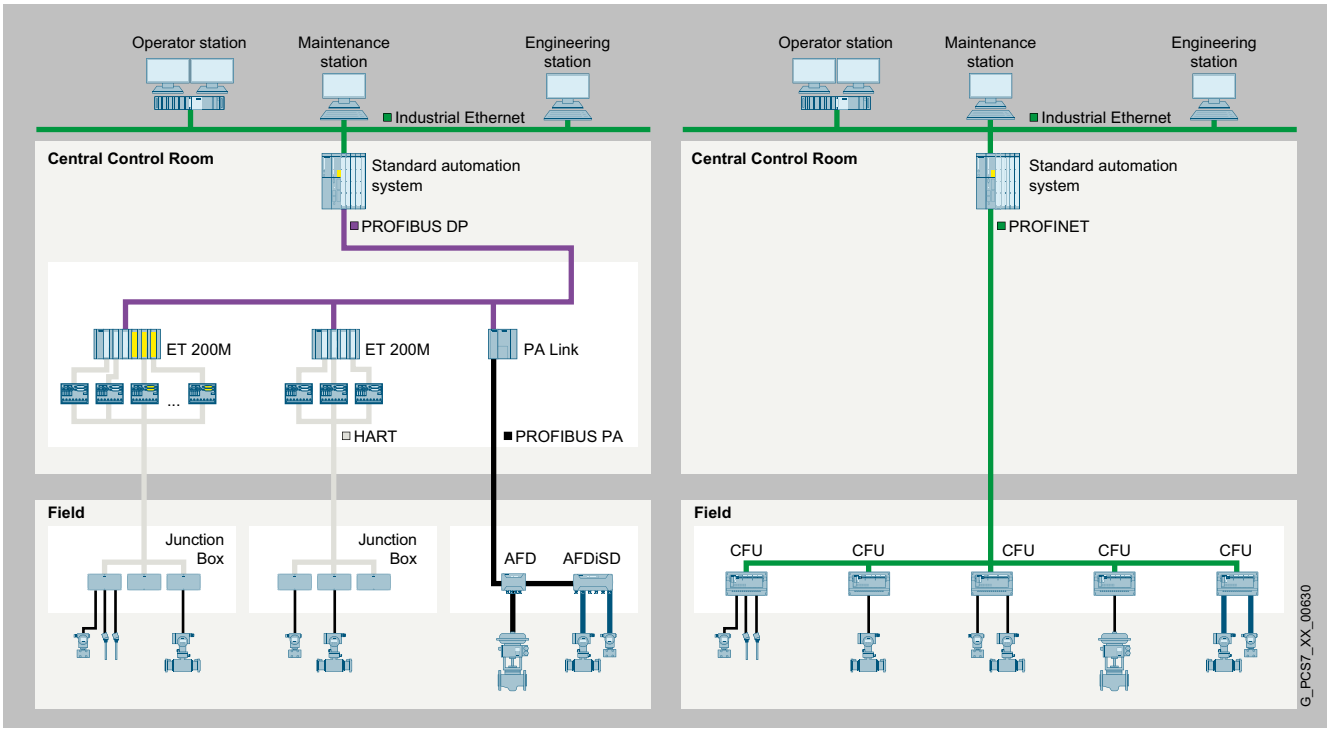

Field device connection with previous technology (left) and with SIMATIC CFU (right)

© Siemens AG 2024

Overview (continued)

The SIMATIC Compact Field Unit (CFU) is a real game-changer in field device connection and offers you entirely new prospects regarding simplicity, flexibility and standardization. The smart field distributor is installed at the process level and is connected via PROFINET directly to the automation system to form the foundation for digitalization in the field. Utilization of digital fieldbus communication considerably simplifies device interfacing compared to conventional 4 ... 20 mA engineering.

Greater flexibility thanks to consistent decentralization

Distributed installation of the SIMATIC CFU means that classic control cabinets are no longer required and you can make considerable savings in cabling and the number of terminal points, as well as reducing planning and documentation overheads. The high granularity (16 I/O per SIMATIC CFU) enables flexible assignment to the higher-level controllers.

Function

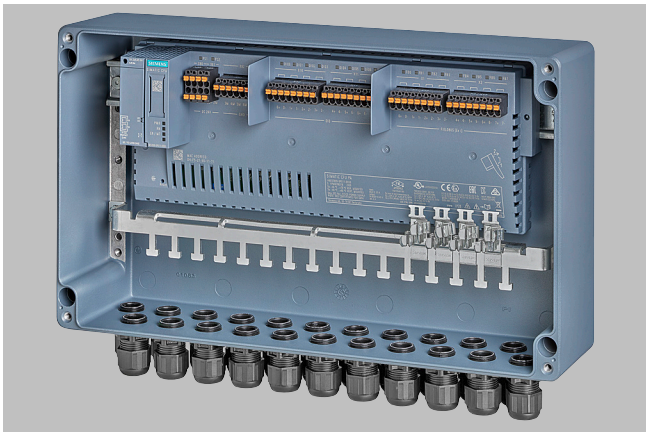

The SIMATIC CFU was specifically designed to meet the requirements of the process industry in the Industry 4.0 environment (application example: SIMATIC CFU in a standard cast aluminum housing).

System integration via Industrial Ethernet standard

- Flexible connection options via PROFINET
- Ready for Process Automation (PA Ready):
  - Redundant PROFINET connection (S2) for maximum availability
  - Media redundancy (MRP)
  - Configuration in RUN (CiR)
- BusAdapter (electrical, optical or combination)

Ready for distributed use

- Installation up to hazardous zone 2/22 (with conformal housing)
- Extended temperature range from -40 to +70 °C
- Conformal coating use up to 4000 meters altitude
- Implementation of increased interference immunity according to NAMUR NE 21
- Optional: Aluminum enclosure for direct field deployment in zone 2/22

More information

Configuring with SIMATIC PCS 7 and third-party systems

See information on:

Product information page

https://support.industry.siemens.com/cs/ww/en/view/109749357

Catalog

https://support.industry.siemens.com/cs/ww/en/view/10398139

Configuration with the TIA portal

https://support.industry.siemens.com/cs/de/en/view/109758252

© Siemens AG 2024

Overview

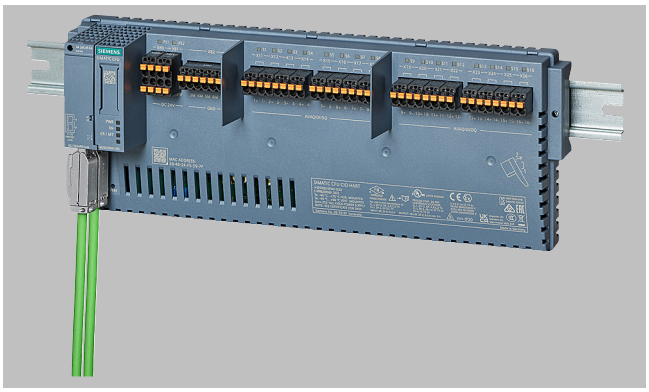

SIMATIC CFU CIO HART edition, in this case with BusAdapter, PROFINET bus cable and push-in terminals

SIMATIC CFU CIO HART edition

One device for all signal types

The SIMATIC CFU CIO HART is an innovative PROFINET device and offers the possibility of flexibly connecting all signal types to any channel. It is possible to process analog inputs (optionally with HART), analog outputs (optionally with HART), digital inputs and digital outputs. The corresponding signal types are configured conveniently using drag-and-drop in engineering. The SIMATIC CFU CIO HART thus offers a versatile solution for using the different signal types in your system with just one device.

16 freely configurable IO channels:

- Analog input/analog output:
  - 0-20 mA, 4-20 mA, 4-20 mA with HART
- Digital input/digital output:
  - Multiple modes available: Standard-DI, DI-Namur, DI Open-Collector
  - Counter up to 5 kHz
  - DI 24 V DC; DQ 24 V DC 0.5/2 A

Aluminum field enclosure

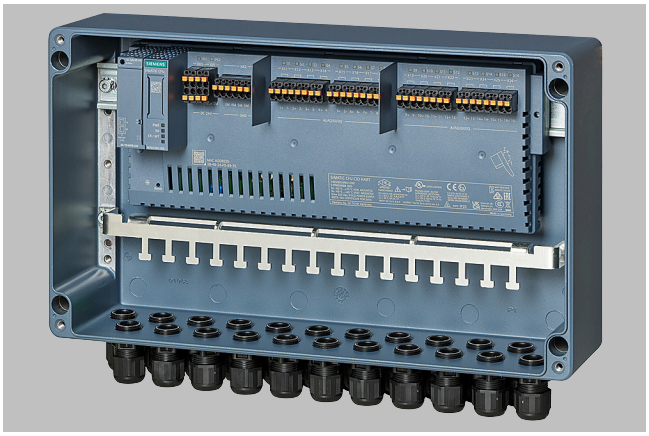

SIMATIC CFU CIO HART edition, aluminum field enclosure, open

Overview (continued)

SIMATIC CFU CIO HART edition, aluminum field enclosure, closed

The die-cast aluminum enclosure is suitable for use in zone 2/22 hazardous areas. The following are included in the enclosure scope of supply:

- 22 × M20 plastic cable glands (incl. blanking plugs)
- 35 mm DIN rail
- Rail for strain relief and shield support

The enclosure has an inspection window for LED diagnostics.

Selection and ordering data

SIMATIC CFU CIO HART with aluminum enclosure Comprising: • 1 × SIMATIC CFU CIO HART (6ES7655-5PX41-1XX0) • 1 × aluminum enclosure with cable glands, shield busbar, shield terminals pre-assembled and tested	**6ES7655-5PX41-1AX0**
SIMATIC CFU CIO HART SIMATIC Compact Field Unit CIO HART edition with 16 × freely configurable channels (AI; AQ; HART; DI 24 V DC; DI NAMUR; DQ 24 V DC 0.5/2 A; Counter) • Installation up to hazardous zone 2 • Channel diagnostics • PROFINET interface • Use of PROFINET BusAdapter • Configuration in RUN (CiR) • Media redundancy (MRP) • PROFINET system redundancy (S2) • Temperature range -40 ... +70 °C • Installation on a 35 mm DIN rail	**6ES7655-5PX41-1XX0**

© Siemens AG 2024

Technical specifications

Article number	6ES7655-5PX41-1AX0	6ES7655-5PX41-1XX0
General information		
Product type designation	CFU CIO HART with aluminum enclosure	CFU CIO HART
Number of channels	16	16
• Product function		
• I&M data	Yes; I&M0 to I&M3	Yes; I&M0 to I&M3
• Isochronous mode	No	No
• The user can configure digital channels as input/output as required	Yes	Yes
• Digital channels can be parameterized	Yes	Yes
• Engineering with		
• STEP 7 TIA Portal configurable/integrated from version	V19 Update 2	V19 Update 2
• STEP 7 configurable/integrated from version	STEP 7 V5.7	STEP 7 V5.7
• PCS 7 configurable/integrated from version	V9.1 SP2 UC6	V9.1 SP2 UC6
• PROFIBUS from GSD version/GSD revision	- / -	- / -
• PROFINET from GSD version/GSD revision	GSDML V2.43 2024.03.04	GSDML V2.43 2024.03.04
• Operating mode		
• DI	Yes	Yes
• Counter	Yes	Yes
• DQ	Yes	Yes
Installation type/mounting		
Mounting	For horizontal and vertical mounting	on 35 mm DIN rail, 2 spacing units wide
Mounting position	Horizontal, vertical	Horizontal, vertical
Recommended mounting position	horizontal set up	horizontal set up
Supply voltage		
Type of supply voltage	24 V DC	24 V DC
Rated value (DC)	24 V	24 V
Reverse polarity protection	Yes	Yes
Short-circuit protection	Yes	Yes
Redundant power supply	Yes	Yes
• Mains buffering		
• Mains/voltage failure stored energy time	1 ms; For communication	1 ms; For communication
Input current		
Current consumption (rated value)	4.1 A; RJ45 BusAdapter, 8xDI, 4xAI, 2xAQ, 2xDQ with 2 A each	4.1 A; RJ45 BusAdapter, 8xDI, 4xAI, 2xAQ, 2xDQ with 2 A each
Current consumption, max.	9 A	9 A
Inrush current, max.	7 A	7 A
I^2t	0.5 $A^2 \cdot s$	0.5 $A^2 \cdot s$
Encoder supply		
Number of outputs	16	16
Output voltage, min.	12 V	12 V
Short-circuit protection	Yes; Electronic	Yes; Electronic
• Output current		
• up to 60 °C, max.	6 A; total current DQ + additional current for analog channels	8 A; total current DQ + additional current for analog channels
• up to 70 °C, max.		6 A; total current DQ + additional current for analog channels
Power loss		
Power loss, typ.	6.6 W; RJ45 BusAdapter, 8xDI, 4xAI, 2xAQ, 2xDQ with 12 ohms load each	6.6 W; RJ45 BusAdapter, 8xDI, 4xAI, 2xAQ, 2xDQ with 12 ohms load each
Address area		
• Address space per station		
• Address space per station, max.	1 440 byte; Dependent on configuration	1 440 byte; Dependent on configuration

© Siemens AG 2024

Technical specifications (continued)

Article number	6ES7655-5PX41-1AX0	6ES7655-5PX41-1XX0
Digital inputs		
Number of digital inputs	16	16
Digital inputs, parameterizable	Yes	Yes
Source/sink input	Yes	Yes
Input characteristic curve in accordance with IEC 61131, type 1	Yes	Yes
Input characteristic curve in accordance with IEC 61131, type 2	No	No
Input characteristic curve in accordance with IEC 61131, type 3	Yes	Yes
Pulse extension	Yes; off, 50 ms, 100 ms, 200 ms, 500 ms, 1 s, 2 s	Yes; off, 50 ms, 100 ms, 200 ms, 500 ms, 1 s, 2 s
• Digital input functions, parameterizable		
• Gate start/stop	Yes; hardware gate, usable by multiple DI counters	Yes; hardware gate, usable by multiple DI counters
• Freely usable digital input	Yes; Parameterizable input filter	Yes; Parameterizable input filter
• Counter	Yes	Yes
• Number, max.	16	16
• Counting frequency, max.	5 kHz; fast counter mode, sinking input; 1 kHz for sourcing input, NAMUR	5 kHz; high-speed counter mode, sinking input; 1 kHz for sourcing input, NAMUR
• Counting width	32 bit	32 bit
• Counting direction up/down	Yes; Up	Yes; Up
• Input voltage		
• Rated value (DC)	24 V	24 V
• for signal "0"	-9 V to +5 V	-9 V to +5 V
• for signal "1"	+11 to +30V	+11 to +30V
• Input current		
• for signal "1", typ.	2.5 mA; max: 2.5 mA sourcing input; 2.3 mA sinking input; 10 mA fast counter; 6.5 mA NAMUR	2.5 mA; max: 2.5 mA sourcing input; 2.3 mA sinking input; 10 mA fast counter; 6.5 mA NAMUR
• Input delay (for rated value of input voltage)		
• for standard inputs		
• parameterizable	Yes; none / 0.05 / 0.1 / 0.2 / 0.4 / 0.8 / 1.6 / 3.2 / 12.8 / 20 ms	Yes; none / 0.05 / 0.1 / 0.2 / 0.4 / 0.8 / 1.6 / 3.2 / 12.8 / 20 ms
• Cable length		
• shielded, max.	1 000 m	1 000 m
• unshielded, max.	600 m	600 m
Digital outputs		
Type of digital output	Transistor	Transistor
Number of digital outputs	16	16
Current-sinking	No	No
Current-sourcing	Yes	Yes
Short-circuit protection	Yes	Yes
• Response threshold, typ.	4.1 A	4.1 A
Open-circuit detection	Yes	Yes
Overload protection	Yes	Yes
Limitation of inductive shutdown voltage to	typ. L+ (-11 V)	typ. L+ (-11 V)
Controlling a digital input	Yes	Yes
• Switching capacity of the outputs		
• with resistive load, max.	2 A	2 A
• on lamp load, max.	5 W	5 W
• Load resistance range		
• lower limit	12 Ω	12 Ω
• upper limit	12 kΩ	12 kΩ

© Siemens AG 2024

Technical specifications (continued)

Article number	6ES7655-5PX41-1AX0	6ES7655-5PX41-1XX0
• Output voltage		
• Type of output voltage	DC	DC
• for signal "1", min.	Ue minus 1 V	Ue minus 1 V
• Output current		
• for signal "1" rated value	2 A	2 A
• for signal "0" residual current, max.	0.1 mA	0.1 mA
• Output delay with resistive load		
• "0" to "1", typ.	50 µs	50 µs
• "0" to "1", max.	100 µs	100 µs
• "1" to "0", typ.	50 µs	50 µs
• "1" to "0", max.	100 µs	100 µs
• Parallel switching of two outputs		
• for uprating	No	No
• for redundant control of a load	No	No
• Switching frequency		
• with resistive load, max.	100 Hz	100 Hz
• with inductive load, max.	1 Hz; at 2 A; 2 Hz at 0.5 A	1 Hz; at 2 A; 2 Hz at 0.5 A
• on lamp load, max.	10 Hz	10 Hz
• Total current of the outputs		
• Current per channel, max.	2 A	2 A
• horizontal installation		
• up to 60 °C, max.	6 A	8 A
• up to 70 °C, max.		6 A
• vertical installation		
• up to 60 °C, max.	6 A	8 A
• up to 70 °C, max.		6 A
• Cable length		
• shielded, max.	1 000 m	1 000 m
• unshielded, max.	600 m	600 m
Analog inputs		
Number of analog inputs	16	16
• Input ranges (rated values), currents		
• 0 to 20 mA	Yes; 16 bit incl. sign	Yes; 16 bit incl. sign
• 4 mA to 20 mA	Yes; 16 bit incl. sign	Yes; 16 bit incl. sign
• HART communication		
• Primary Master	Yes	Yes
• input resistance (with HART communication)	233 Ω	233 Ω
• Cable length		
• shielded, max.	1 000 m	1 000 m
• unshielded, max.	600 m	600 m
Analog outputs		
Number of analog outputs	16; short-circuit proof with respect to ground	16; short-circuit proof with respect to ground
• Output ranges, current		
• 0 to 20 mA	Yes; 15 bit	Yes; 15 bit
• -20 mA to +20 mA	No	No
• 4 mA to 20 mA	Yes; 16 bit incl. sign	Yes; 16 bit incl. sign
• Connection of actuators		
• for current output two-wire connection	Yes	Yes

© Siemens AG 2024

Technical specifications (continued)

Article number	6ES7655-5PX41-1AX0	6ES7655-5PX41-1XX0
• Load impedance (in rated range of output)		
• for current outputs, min.	50 Ω	50 Ω
• with current outputs, max.	750 Ω	750 Ω
• with current outputs, inductive load, max.	10 mH	10 mH
• Cable length		
• shielded, max.	1 000 m	1 000 m
• unshielded, max.	600 m	600 m
Analog value generation for the inputs		
• Integration and conversion time/resolution per channel		
• Resolution with overrange (bit including sign), max.	16 bit	16 bit
• Integration time, parameterizable	Yes; channel by channel	Yes; channel by channel
• Smoothing of measured values		
• parameterizable	Yes; none, weak, medium, strong, channel-by-channel	Yes; none, weak, medium, strong, channel-by-channel
Analog value generation for the outputs		
• Settling time		
• for resistive load	2 ms; 750 ohm	2 ms; 750 ohm
• for inductive load	1.2 ms	1.2 ms
Encoder		
• Connection of signal encoders		
• for current measurement as 2-wire transducer	Yes	Yes
• Connectable encoders		
• NAMUR encoder/changeover contact according to EN 60947	Yes; no CO contact	Yes; no CO contact
• 2-wire sensor	Yes	Yes
• permissible quiescent current (2-wire sensor), max.	1.5 mA	1.5 mA
Errors/accuracies		
• Basic error limit (operational limit at 25 °C)		
• Current, relative to input range, (+/-)	0.1 %	0.1 %
• Current, relative to output range, (+/-)	0.1 %	0.1 %
Interfaces		
Number of PROFINET interfaces	1	1
1. Interface		
Interface type	PROFINET	PROFINET
Isolated	Yes	Yes
• Interface types		
• Number of ports	2; via BusAdapter	2; via BusAdapter
• integrated switch	Yes	Yes
• BusAdapter (PROFINET)	Yes	Yes
• Protocols		
• PROFINET IO Device	Yes	Yes
• Media redundancy	Yes; as MRP client	Yes; as MRP client
Interface types		
• RJ 45 (Ethernet)		
• 100 Mbps	Yes	Yes
• Autonegotiation	Yes	Yes
• Autocrossing	Yes	Yes
Protocols		
Supports protocol for PROFINET IO	Yes	Yes
HART protocol	Yes	Yes
• Protocol version	up to Revision 7	up to Revision 7

© Siemens AG 2024

Technical specifications (continued)

Article number	6ES7655-5PX41-1AX0	6ES7655-5PX41-1XX0
• PROFINET IO Device		
• Services		
• Shared device	No	No
• Redundancy mode		
• PROFINET system redundancy (S2)	Yes	Yes; Type S2
• Media redundancy		
• MRP	Yes	Yes
• Open IE communication		
• LLDP	Yes	Yes
Interrupts/diagnostics/status information		
Status indicator	Yes	Yes
Alarms	Yes	Yes
Diagnostics function	Yes	Yes
Substitute values connectable	Yes	Yes
• Alarms		
• Diagnostic alarm	Yes	Yes
• Maintenance interrupt	Yes	Yes
• Limit value alarm	Yes	Yes
• Hardware interrupt	Yes	Yes
• Diagnoses		
• Monitoring the supply voltage	Yes	Yes
• Wire-break	Yes; channel by channel	Yes; channel by channel
• Short-circuit	Yes; channel by channel	Yes; channel by channel
• Group error	Yes	Yes
• Overflow/underflow	Yes; channel by channel	Yes; channel by channel
• Diagnostics indication LED		
• RUN LED	Yes; green LED	Yes; green LED
• ERROR LED	Yes; red LED	Yes; red LED
• MAINT LED	Yes; Yellow LED	Yes; Yellow LED
• Monitoring of the supply voltage (PWR-LED)	Yes; green/red LED	Yes; green/red LED
• Channel status display	Yes; green/red LED	Yes; green/red LED
• Status indicator digital input (green)	Yes	Yes
• Status indicator digital output (green)	Yes	Yes
• Connection display LINK TX/RX	Yes; 2x green link LEDs on BusAdapter	Yes; 2x green link LEDs on BusAdapter
Integrated Functions		
Frequency measurement	Yes	Yes
• Number of frequency meters	16	16
• Counting functions		
• Continuous counting	Yes	Yes
• Counter response parameterizable	Yes	Yes
• Hardware gate via digital input	Yes	Yes
• Software gate	Yes	Yes
• Measuring functions		
• Dynamic measurement period adjustment	Yes	Yes
• Measuring range		
• Frequency measurement, min.	0.1 Hz	0.1 Hz
• Frequency measurement, max.	25 kHz; fast counter mode, sinking input; 1 kHz sourcing input, NAMUR	25 kHz; high-speed counter mode, sinking input; 1 kHz for sourcing input, NAMUR

© Siemens AG 2024

Technical specifications (continued)

Article number	6ES7655-5PX41-1AX0	6ES7655-5PX41-1XX0
• Accuracy		
• Frequency measurement	100 ppm; depending on measuring interval and signal evaluation	100 ppm; depending on measuring interval and signal evaluation
Potential separation		
• Potential separation digital inputs		
• between the channels	No	No
• between the channels and the power supply of the electronics	No	No
• Potential separation digital outputs		
• between the channels	No	No
• between the channels and the power supply of the electronics	No	No
Degree and class of protection		
IP degree of protection	IP66	IP20
connection method		
Design of electrical connection	Connection plug	Connection plug
Dimensions		
Width	414 mm	329 mm
Height	266 mm	123 mm
Depth	111 mm	74 mm
Weights		
Weight, approx.	5.5 kg	0.7 kg

© Siemens AG 2024

Overview

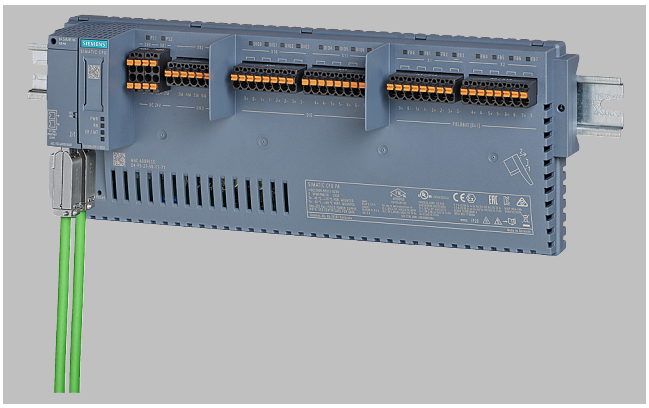

SIMATIC CFU here with BusAdapter, PROFINET bus cable and push-in terminals

SIMATIC CFU PA edition

Plug-and-produce simplicity

Digitalization requires a digital infrastructure facilitating integrated digital communication right down to the sensors and actuators. You can use the established and proven PROFIBUS PA standard to achieve this. It is integrated into the PA edition of the SIMATIC CFU, thus combining ruggedness and easy handling with all the advantages of the PROFINET standard based on Industrial Ethernet. Connected devices are automatically addressed. The device is integrated via standardized communication profiles.

This innovative new implementation of the PROFIBUS PA concept makes it possible to combine the simplicity of a point-to-point wiring system with the scalability of digital PROFIBUS PA fieldbus communication. As with digital field devices, it is not necessary to know prior to connection whether the discrete field device is a sensor or actuator – This can be easily configured afterwards via software.

Combination of digital fieldbus and discrete I/Os

- 8 × digital fieldbus (PROFIBUS PA)
- 8 × digital inputs/outputs, freely configurable (1 x counter functionality / frequency measurement)

Easy to use

- Automatic addressing of PROFIBUS PA field devices
- System-supported detection and integration of PROFIBUS PA field devices into the process control system
  - Utilization of standardized PA profiles
  - Commissioning, device replacement and maintenance wizards
- Implementation of diagnostic messages according to NAMUR NE 107
- Installation on a 35 mm DIN rail

Overview (continued)

Aluminum field enclosure

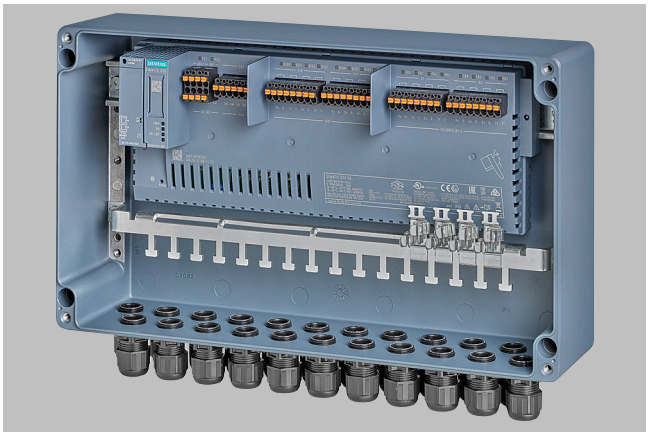

CFU PA with RJ45 and push-in terminals, aluminum field enclosure, open

SIMATIC CFU aluminum field enclosure, closed

The die-cast aluminum enclosure is suitable for use in zone 2/22 hazardous areas. The following are included in the enclosure scope of supply:

- 22 × M20 plastic cable glands (incl. blanking plugs)
- 35 mm DIN rail
- Rail for strain relief and shield support

The enclosure has an inspection window for LED diagnostics.

© Siemens AG 2024

Selection and ordering data

SIMATIC CFU PA bundle with push-in terminals Comprising: • SIMATIC CFU PA, Article No. 6ES7655-5PX11-0XX0 • SIMATIC CFU push-in terminals, Article No. 6ES7655-5PX00-1XX0 pre-assembled and tested	**6ES7655-5PX11-1XX0**
SIMATIC CFU PA bundle with aluminum enclosure Comprising: • SIMATIC CFU PA, Article No. 6ES7655-5PX11-0XX0 • SIMATIC CFU push-in terminals, Article No. 6ES7655-5PX00-1XX0 • Aluminum enclosure with cable glands, shield busbar, shield connection clamps pre-assembled and tested	**6ES7655-5PX11-1AX0**

© Siemens AG 2024

Technical specifications

Article number	6ES7655-5PX11-1XX0	6ES7655-5PX11-1AX0
General information		
Product type designation	PA Bundle	
Number of channels	16	
• Product function		
• I&M data	Yes; I&M0 to I&M4	
• Isochronous mode	No	
• The user can configure digital channels as input/output as required	Yes	
• Digital channels can be parameterized	Yes	
• Engineering with		
• STEP 7 TIA Portal configurable/integrated from version	V17	
• STEP 7 configurable/integrated from version	V5.6 HF2 and higher	
• PCS 7 configurable/integrated from version	V9.0 SP2 and higher	
• PCS neo can be configured/integrated from version	V3.0	
• PROFIBUS from GSD version/GSD revision	- / -	
• PROFINET from GSD version/GSD revision	GSDML V2.3	
• Operating mode		
• Counter	Yes	
Installation type/mounting		
Mounting	on 35 mm DIN rail, 2 spacing units wide	
Mounting position	Horizontal, vertical	Horizontal, vertical
Recommended mounting position		horizontal set up
Supply voltage		
Type of supply voltage	24 V DC	
Rated value (DC)	24 V	
Reverse polarity protection	Yes	
Short-circuit protection	Yes	
Redundant power supply	Yes	
• Mains buffering		
• Mains/voltage failure stored energy time	5 ms; Bridging for field devices and communication	
Input current		
Current consumption (rated value)	2.5 A	
Current consumption, max.	2.55 A	
Inrush current, max.	8 A	
I^2t	0.3 $A^2 \cdot s$	
Encoder supply		
Number of outputs	8	
Output voltage, min.	18.2 V	
Short-circuit protection	Yes; Electronic	
• Output current		
• up to 60 °C, max.	2 A	
• up to 70 °C, max.	1 A	
Power loss		
Power loss, typ.	8.2 W; Depending on the type of BusAdapter used (typ. RJ45)	
Address area		
• Address space per station		
• Address space per station, max.	1 440 byte; Dependent on configuration	
Digital inputs		
Number of digital inputs	8	
Source/sink input	Yes; P-reading	

© Siemens AG 2024

Technical specifications (continued)

Article number	6ES7655-5PX11-1XX0	6ES7655-5PX11-1AX0
Input characteristic curve in accordance with IEC 61131, type 1	Yes	
Input characteristic curve in accordance with IEC 61131, type 2	No	
Input characteristic curve in accordance with IEC 61131, type 3	Yes	
Pulse extension	No	
• Number of simultaneously controllable inputs		
• horizontal installation		
• up to 60 °C, max.	8; Total current must be observed, see DQ	
• up to 70 °C, max.	8; Total current must be observed, see DQ	
• vertical installation		
• up to 60 °C, max.	8; Total current must be observed, see DQ	
• Digital input functions, parameterizable		
• Counter	Yes	
• Number, max.	1	
• Counting frequency, max.	1 kHz	
• Counting width	32 bit	
• Counting direction up/down	Yes; Up	
• Input voltage		
• Rated value (DC)	24 V	
• for signal "0"	-30 to +5 V	
• for signal "1"	+11 to +30V	
• Input current		
• for signal "1", typ.	2.5 mA; Typical	
• Input delay (for rated value of input voltage)		
• for standard inputs		
• parameterizable	No	
• at "0" to "1", max.	3.2 ms; for counter function 0,1 ms	
• at "1" to "0", max.	3.2 ms; for counter function 0,1 ms	
• Cable length		
• shielded, max.	1 000 m	
• unshielded, max.	600 m	
Digital outputs		
Type of digital output	Transistor	
Number of digital outputs	8	
Current-sinking	No	
Current-sourcing	Yes	
Short-circuit protection	Yes	
• Response threshold, typ.	0.7 to 1.3 A	
Limitation of inductive shutdown voltage to	Typ. L+ (-50 V)	
Controlling a digital input	Yes	
• Switching capacity of the outputs		
• on lamp load, max.	5 W	
• Load resistance range		
• lower limit	48 Ω	
• upper limit	12 kΩ	
• Output voltage		
• Type of output voltage	DC	
• for signal "1", min.	Ue minus 1 V	
• Output current		
• for signal "1" rated value	0.5 A	
• for signal "0" residual current, max.	0.1 mA	

© Siemens AG 2024

Technical specifications (continued)

Article number	6ES7655-5PX11-1XX0	6ES7655-5PX11-1AX0
• Output delay with resistive load		
• "0" to "1", max.	50 µs	
• "1" to "0", max.	100 µs	
• Parallel switching of two outputs		
• for uprating	No	
• for redundant control of a load	No	
• Switching frequency		
• with resistive load, max.	100 Hz	
• with inductive load, max.	2 Hz	
• on lamp load, max.	10 Hz	
• Total current of the outputs		
• Current per channel, max.	0.5 A	
• horizontal installation		
• up to 60 °C, max.	2 A	
• up to 70 °C, max.	1 A	
• vertical installation		
• up to 60 °C, max.	2 A	
• Cable length		
• shielded, max.	1 000 m	
• unshielded, max.	600 m	
Encoder		
• Connectable encoders		
• 2-wire sensor	Yes	
• permissible quiescent current (2-wire sensor), max.	1.5 mA	
Interfaces		
Number of PROFINET interfaces	1	
Number of PROFIBUS interfaces	0	
• PROFIBUS PA		
• Transmission rate, max.	31.25 kbit/s	
• Number of connectable PA field devices	8; electrically isolated from other interfaces, isolation tested at 2 500 V DC	
• Current output to PA field devices, max.	320 mA	
• permissible current per spur line	40 mA	
• Automatic addressing	Yes	
• System-supported integration of field devices via PA profiles	Yes	
• Extended fieldbus diagnostics	Yes	
1. Interface		
Interface type	PROFINET	
Isolated	Yes	
• Interface types		
• Number of ports	2	
• integrated switch	Yes	
• BusAdapter (PROFINET)	Yes	
• Protocols		
• PROFINET IO Device	Yes	
• PROFIBUS DP slave	No	
Interface types		
• RJ 45 (Ethernet)		
• 100 Mbps	Yes	
• Autonegotiation	Yes	

© Siemens AG 2024

Technical specifications (continued)

Article number	6ES7655-5PX11-1XX0	6ES7655-5PX11-1AX0
• Autocrossing	Yes	
Protocols		
Supports protocol for PROFINET IO	Yes	
• Redundancy mode		
• PROFINET system redundancy (S2)	Yes; Type S2	
• Media redundancy		
• MRP	Yes	
• Open IE communication		
• LLDP	Yes	
Interrupts/diagnostics/status information		
Status indicator	Yes	
Alarms	Yes	
Diagnostics function	Yes	
• Diagnoses		
• Monitoring of encoder power supply	Yes	
• Wire-break	Yes	
• Short-circuit	Yes	
• Diagnostics indication LED		
• RUN LED	Yes; green LED	
• ERROR LED	Yes; red LED	
• MAINT LED	Yes; Yellow LED	
• Monitoring of the supply voltage (PWR-LED)	Yes	
• Status indicator digital input (green)	Yes	
• Status indicator digital output (green)	Yes	
• Spur line status/fault	Yes	
Potential separation		
between the channels and PROFINET	Yes	
• Potential separation digital inputs		
• between the channels	No	
• between the channels and the power supply of the electronics	No	
• Potential separation digital outputs		
• between the channels	No	
• between the channels and the power supply of the electronics	No	
Degree and class of protection		
IP degree of protection	IP20	IP66
Ambient conditions		
• Ambient temperature during operation		
• min.	-40 °C	
• max.	70 °C	
connection method / header		
Design of electrical connection	Connection plug	
• connection method / spur line / header		
• Number of spur lines	8	
• Type of cable	Type A	
• Cable diameter, min.	6 mm	
• Cable diameter, max.	12 mm	
• Conductor cross-section, min.	0.2 mm²	
• Conductor cross-section, max.	2.5 mm²	
• Cable length, max.	120 m	
• total current output to field devices, max.	320 mA	

© Siemens AG 2024

Technical specifications (continued)

Article number	6ES7655-5PX11-1XX0	6ES7655-5PX11-1AX0
• Number of connectable field devices	8	
• Current limitation per field device, max.	40 mA	
• No-load voltage, max.	15.3 V	
• short-circuit proof	Yes	
• Short-circuit current (test current); max.	8 mA	
• intrinsically safe according to FISCO model	Yes	
• Debounce logic	Yes	
Dimensions		
Width	329 mm	414 mm
Height	123 mm	266 mm
Depth	74 mm	111 mm
Weights		
Weight, approx.	650 g	5.5 kg

© Siemens AG 2024

Overview

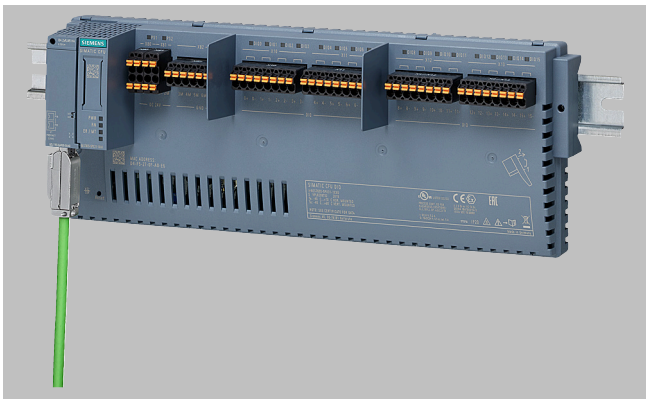

SIMATIC CFU DIQ edition

Individual, customer-specific solutions and flexible system/plant extensions are requirements that are becoming increasingly important in the process industry due to digitalization. SIMATIC CFU DIQ edition with 16 freely configurable digital IO channels offers a solution for the growing demands of distributed I/O.

SIMATIC CFU also has expansion functions for optional configuration. Two additional operating modes can be activated for selected digital inputs. "Counter" operating mode and "Frequency measurement" operating mode with a cut-off frequency of 1 kHz.

Actuator shutdown can be set for the digital outputs. The actuator shutdown of the SIMATIC CFU uses a monitoring channel (DI channel) to quickly set all digital outputs to a low digital level.

- 16 × digital inputs/outputs, freely configurable (2 x counter functionality / frequency measurement)

Aluminum field enclosure

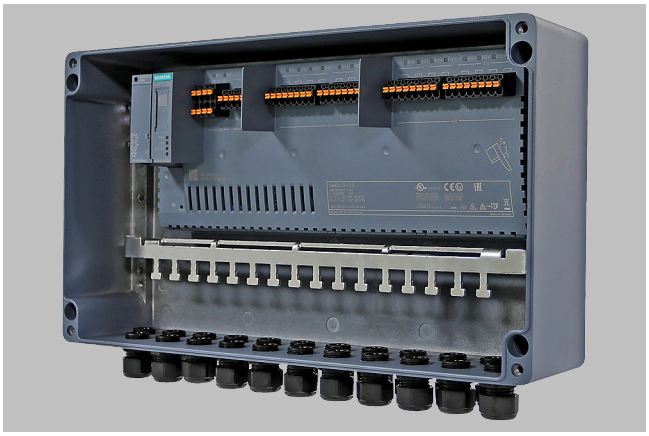

SIMATIC CFU DIQ aluminum field enclosure, open

Overview (continued)

SIMATIC CFU aluminum field enclosure, closed

The die-cast aluminum enclosure is suitable for use in zone 2/22 hazardous areas. The following are included in the enclosure scope of supply:

- 22 × M20 plastic cable glands (incl. blanking plugs)
- 35 mm DIN rail
- Rail for strain relief and shield support

The enclosure has an inspection window for LED diagnostics.

Selection and ordering data

SIMATIC CFU DIQ with aluminum housing Comprising: • SIMATIC CFU DIQ, Article No. 6ES7655-5PX31-0XX0 • SIMATIC CFU push-in terminals, Article No. 6ES7655-5PX00-1XX0 • Aluminum housing with cable glands, shield busbar, shield connection clamp pre-assembled and tested	**6ES7655-5PX31-1AX0**
SIMATIC CFU DIQ Comprising: • SIMATIC CFU DIQ, Article No. 6ES7655-5PX31-0XX0 • SIMATIC CFU push-in terminals, Article No. 6ES7655-5PX31-1XX0 pre-assembled and tested	**6ES7655-5PX31-1XX0**

© Siemens AG 2024

Technical specifications

Article number	6ES7655-5PX31-1AX0	6ES7655-5PX31-1XX0
General information		
Product type designation		DIQ Bundle
Number of channels	16	16
• Product function		
• I&M data	Yes; I&M0 to I&M3	Yes; I&M0 to I&M3
• Isochronous mode	No	No
• The user can configure digital channels as input/output as required	Yes	Yes
• Digital channels can be parameterized	Yes	Yes
• Engineering with		
• STEP 7 TIA Portal configurable/integrated from version	V17	V17
• STEP 7 configurable/integrated from version	V5.6 HF2 and higher	V5.6 HF2 and higher
• PCS 7 configurable/integrated from version	V9.0 SP2 and higher	V9.0 SP2 and higher
• PCS neo can be configured/integrated from version	V3.1	V3.1
• PROFIBUS from GSD version/GSD revision	- / -	- / -
• PROFINET from GSD version/GSD revision	GSDML V2.3	GSDML V2.3
• Operating mode		
• Counter	Yes	Yes
Installation type/mounting		
Mounting	For horizontal and vertical mounting	on 35 mm DIN rail, 2 spacing units wide
Mounting position	Horizontal, vertical	Horizontal, vertical
Supply voltage		
Type of supply voltage	24 V DC	24 V DC
Rated value (DC)	24 V	24 V
Reverse polarity protection	Yes	Yes
Short-circuit protection	Yes	Yes
Redundant power supply	Yes	Yes
• Mains buffering		
• Mains/voltage failure stored energy time	5 ms; For communication	5 ms; For communication
Input current		
Current consumption (rated value)	5.12 A	5.12 A
Current consumption, max.	5.13 A	5.13 A
Inrush current, max.	4.8 A	4.8 A
I^2t	0.073 A^2·s	0.073 A^2·s
Encoder supply		
Number of outputs	16	16
Output voltage, min.	18.2 V	18.2 V
Short-circuit protection	Yes; Electronic	Yes; Electronic
• Output current		
• up to 60 °C, max.	5 A	5 A
• up to 70 °C, max.	4 A	4 A
Power loss		
Power loss, typ.	2.88 W; Depending on the type of BusAdapter used (typ. RJ45)	2.88 W; Depending on the type of BusAdapter used (typ. RJ45)
Address area		
• Address space per station		
• Address space per station, max.	1 440 byte; Dependent on configuration	1 440 byte; Dependent on configuration
Digital inputs		
Number of digital inputs	16	16
Source/sink input	Yes; P-reading	Yes; P-reading
Input characteristic curve in accordance with IEC 61131, type 1	Yes	Yes
Input characteristic curve in accordance with IEC 61131, type 2	No	No
Input characteristic curve in accordance with IEC 61131, type 3	Yes	Yes

© Siemens AG 2024

Technical specifications (continued)

Article number	6ES7655-5PX31-1AX0	6ES7655-5PX31-1XX0
Pulse extension	No	No
• Number of simultaneously controllable inputs		
• horizontal installation		
• up to 60 °C, max.	16; Total current must be observed, see DQ	16; Total current must be observed, see DQ
• up to 70 °C, max.	16; Total current must be observed, see DQ	16; Total current must be observed, see DQ
• vertical installation		
• up to 60 °C, max.	16; Total current must be observed, see DQ	16; Total current must be observed, see DQ
• Digital input functions, parameterizable		
• Counter	Yes	Yes
• Number, max.	2	2
• Counting frequency, max.	1 kHz	1 kHz
• Counting width	32 bit	32 bit
• Counting direction up/down	Yes; Up	Yes; Up
• Input voltage		
• Rated value (DC)	24 V	24 V
• for signal "0"	-30 to +5 V	-30 to +5 V
• for signal "1"	+11 to +30V	+11 to +30V
• Input current		
• for signal "1", typ.	2.5 mA; Typical	2.5 mA; Typical
• Input delay (for rated value of input voltage)		
• for standard inputs		
• parameterizable	No	No
• at "0" to "1", max.	3.2 ms; for counter function 0,1 ms	3.2 ms; for counter function 0,1 ms
• at "1" to "0", max.	3.2 ms; for counter function 0,1 ms	3.2 ms; for counter function 0,1 ms
• Cable length		
• shielded, max.	1 000 m	1 000 m
• unshielded, max.	600 m	600 m
Digital outputs		
Type of digital output	Transistor	Transistor
Number of digital outputs	16	16
Current-sinking	No	No
Current-sourcing	Yes	Yes
Short-circuit protection	Yes	Yes
• Response threshold, typ.	0.7 to 1.3 A	0.7 to 1.3 A
Limitation of inductive shutdown voltage to	Typ. L+ (-50 V)	Typ. L+ (-50 V)
Controlling a digital input	Yes	Yes
• Switching capacity of the outputs		
• on lamp load, max.	5 W	5 W
• Load resistance range		
• lower limit	48 Ω	48 Ω
• upper limit	12 kΩ	12 kΩ
• Output voltage		
• Type of output voltage	DC	DC
• for signal "1", min.	Ue minus 1 V	Ue minus 1 V
• Output current		
• for signal "1" rated value	0.5 A	0.5 A
• for signal "0" residual current, max.	0.1 mA	0.1 mA
• Output delay with resistive load		
• "0" to "1", max.	50 µs	50 µs
• "1" to "0", max.	100 µs	100 µs

© Siemens AG 2024

Technical specifications (continued)

Article number	6ES7655-5PX31-1AX0	6ES7655-5PX31-1XX0
• Parallel switching of two outputs		
• for uprating	No	No
• for redundant control of a load	No	No
• Switching frequency		
• with resistive load, max.	100 Hz	100 Hz
• with inductive load, max.	2 Hz	2 Hz
• on lamp load, max.	10 Hz	10 Hz
• Total current of the outputs		
• Current per channel, max.	0.5 A	0.5 A
• horizontal installation		
• up to 60 °C, max.	5 A	5 A
• up to 70 °C, max.	4 A	4 A
• vertical installation		
• up to 60 °C, max.	5 A	5 A
• Cable length		
• shielded, max.	1 000 m	1 000 m
• unshielded, max.	600 m	600 m
Encoder		
• Connectable encoders		
• 2-wire sensor	Yes	Yes
• permissible quiescent current (2-wire sensor), max.	1.5 mA	1.5 mA
Interfaces		
Number of PROFINET interfaces	1	1
Number of PROFIBUS interfaces	0	0
1. Interface		
Interface type	PROFINET	PROFINET
Isolated	Yes	Yes
• Interface types		
• Number of ports	2	2
• integrated switch	Yes	Yes
• BusAdapter (PROFINET)	Yes	Yes
• Protocols		
• PROFINET IO Device	Yes	Yes
• PROFIBUS DP slave	No	No
Interface types		
• RJ 45 (Ethernet)		
• 100 Mbps	Yes	Yes
• Autonegotiation	Yes	Yes
• Autocrossing	Yes	Yes
Protocols		
Supports protocol for PROFINET IO	Yes	Yes
• Redundancy mode		
• PROFINET system redundancy (S2)	Yes; Type S2	Yes; Type S2
• Media redundancy		
• MRP	Yes	Yes
• Open IE communication		
• LLDP	Yes	Yes
Interrupts/diagnostics/status information		
Status indicator	Yes	Yes
Alarms	Yes	Yes

© Siemens AG 2024

Technical specifications (continued)

Article number	6ES7655-5PX31-1AX0	6ES7655-5PX31-1XX0
Diagnostics function	Yes	Yes
• Diagnoses		
• Monitoring of encoder power supply	Yes	Yes
• Wire-break	Yes	Yes
• Short-circuit	Yes	Yes
• Diagnostics indication LED		
• RUN LED	Yes; green LED	Yes; green LED
• ERROR LED	Yes; red LED	Yes; red LED
• MAINT LED	Yes; Yellow LED	Yes; Yellow LED
• Monitoring of the supply voltage (PWR-LED)	Yes	Yes
• Status indicator digital input (green)	Yes	Yes
• Status indicator digital output (green)	Yes	Yes
Potential separation		
between the channels and PROFINET	Yes	Yes
• Potential separation digital inputs		
• between the channels	No	No
• between the channels and the power supply of the electronics	No	No
• Potential separation digital outputs		
• between the channels	No	No
• between the channels and the power supply of the electronics	No	No
Degree and class of protection		
IP degree of protection	IP66	IP20
Ambient conditions		
• Ambient temperature during operation		
• min.	-40 °C	-40 °C
• max.	60 °C	70 °C
connection method / header		
Design of electrical connection	Connection plug	Connection plug
Dimensions		
Width	414 mm	329 mm
Height	266 mm	123 mm
Depth	111 mm	74 mm
Weights		
Weight, approx.	5.5 kg	610 g

© Siemens AG 2024

Overview

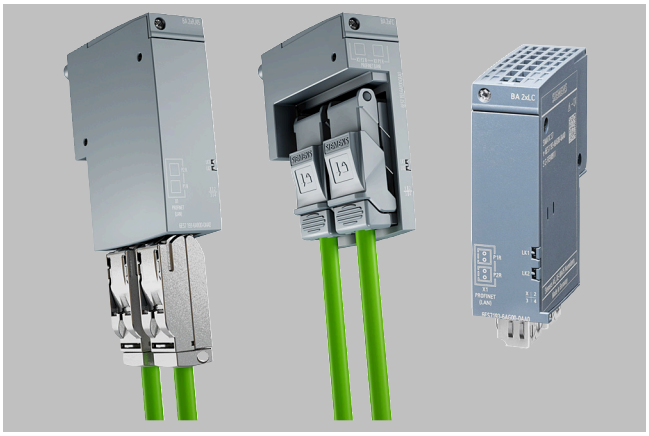

BA 2×RJ45, 2×FC and 2×LC BusAdapter

BusAdapters

A BusAdapter as a separate component allows a free choice of SIMATIC CFU connection to PROFINET:

- BA 2×RJ45:

  2 electrical connections for bus cables with standard RJ45 connectors

- BA 2×FC:

  2 electrical connections for direct connection of FastConnect bus cable

- BA 2×LC:

  2 optical ports for fiber-optic cables

- BA 1×LC, 1×RJ45:

  Mixed BusAdapter 1 optical connection and 1 electrical connection standard RJ45

- BA 1×LC, 1×FC:

  Mixed BusAdapter 1 optical connection and 1 electrical connection for direct connection of FastConnect bus cable

- BA 2×RJ45 VD:

  2 electrical connections for Ethernet communication via 2-, 4- or 8-wire copper cables and distances up to 500 m

Selection and ordering data

BusAdapters	
BA 2×RJ45 BusAdapter 2 × RJ45 connections for PROFINET (standard Ethernet socket)	**6DL1193-6AR00-0AA0**
BA 2×FC BusAdapter 2 × FastConnect (FC) connections for PROFINET	**6DL1193-6AF00-0AA0**
BA 2×LC BusAdapter 2 × glass fiber-optic connections	**6DL1193-6AG00-0AA0**
BA LC/RJ45 BusAdapter 2 × glass fiber-optic connections	**6DL1193-6AG20-0AA0**
BA LC/FC BusAdapter 2 × glass fiber-optic connections	**6DL1193-6AG40-0AA0**
BA 2×RJ45 (VD) BusAdapter 2 × electrical connections for Ethernet communication via 2, 4 or 8-wire copper cables and distances up to 500 m	**6GK5991-2VA00-8AA2**
BA 2xLC-LD BusAdapter 2 × LC-LD port, for single-mode glass fiber-optic, up to max. 20 km	**6ES7193-6AG50-0AA0**
BA LC-LD/RJ45 BusAdapter 1 × LC-LD port, for single-mode fiber-optic, up to max. 20 km, 1 × RJ45 port	**6ES7193-6AG60-0AA0**

© Siemens AG 2024

Technical specifications

Article number	6DL1193-6AG20-0AA0	6DL1193-6AG40-0AA0
General information		
Product type designation	BA LC/RJ45	BA LC/FC
Interfaces		
Number of PROFINET interfaces	1; 2 ports (switch) LC / RJ45	1; 2 ports (switch) LC / FC
• Supports protocol for PROFINET IO		
• Number of RJ45 ports	1	
• Number of FC (FastConnect) connections		1
• Number of LC ports	1; Wavelength of 1 270 ... 1 380 nm, corresponds to 100BASE-FX	1; Wavelength of 1 270 ... 1 380 nm, corresponds to 100BASE-FX
• Cable length		
• Cu conductors	100 m	100 m
• Multimode graded-index fiber 50/125 µm	3 km; min. transmit power -23.5 dB, min. receiver sensitivity -31 dB	3 km; min. transmit power -23.5 dB, min. receiver sensitivity -31 dB
• Multimode graded-index fiber 62.5/125 µm	3 km; min. transmit power -20 dB, min. receiver sensitivity -31 dB	3 km; min. transmit power -20 dB, min. receiver sensitivity -31 dB
Standards, approvals, certificates		
RoHS conformity	Yes	Yes
China RoHS compliance	Yes	Yes
Ambient conditions		
• Ambient temperature during operation		
• min.	-40 °C	-40 °C
• max.	70 °C; = Tmax for horizontal installation; for vertical installation Tmax = 60 °C; redundant setup (2x 6DL1155-6AU00-0PM0): max. 65 °C horizontally, max. 60 °C vertically. When using different IO Devices, the derating specified there must be observed.	65 °C; = Tmax for horizontal installation; for vertical installation Tmax = 60 °C; redundant setup (2x 6DL1155-6AU00-0PM0): max. 60 °C horizontally, max. 55 °C vertically. When using different IO Devices, the derating specified there must be observed.
Dimensions		
Width	20 mm	20 mm
Height	75 mm; Without protective caps (approx. 8 mm)	75 mm; Without protective caps (approx. 8 mm)
Depth	59 mm	59 mm
Weights		
Weight, approx.	32 g	50 g

© Siemens AG 2024

Overview

ET 200SP HA with redundant interface module, standard modules, Ex modules and D-SUB terminal block.

Compact design, flexible connection possibilities and high system availability with redundant PROFINET connections: the SIMATIC ET 200SP HA distributed I/O system is perfectly suited to the requirements of the process industry. The new design allows up to 56 I/O modules per station. An impressively high concentration of up to 32 channels on a module that is only 22.5 mm wide allows for maximum economy in the control cabinet.

Redundant PROFINET connections allow the connection of high-availability controllers via two independent networks, with a choice of copper or fiber-optic cables. The system can be scaled and extended in small steps using a variety of available modules, for example with digital and analog I/Os as well as NAMUR, HART, and other protocols. All 24 V standard signals are connected via an identical terminal block type, which allows a high degree of standardization for the control cabinets.

SIMATIC ET 200SP HA is designed for use in the control cabinet as well as for hazardous areas up to hazardous zone 2. The extended temperature range from -40 to +70 °C and the conformal coating of all components allow direct installation in the field.

Benefits

Highlights at a glance

- Availability
  - Redundancy at the PROFINET interface (S2 or R1)
  - Terminal block with integrated I/O redundancy
  - Hot swapping during runtime
  - Station expansion possible during runtime
- Easy to use
  - Compact modules with permanent wiring
  - One terminal block for all 24 V standard signals
  - Tool-free connection system with push-in terminals
  - Terminal block with D-SUB interface for field connection
- Compact design
  - Compact with up to 56 I/O modules per station
  - High concentration of up to 32 channels on a module that is only 22.5 mm wide
  - System-integrated power bus
- Seamless integration in SIMATIC PCS 7
- PROFINET IO communication standard

© Siemens AG 2024

Design

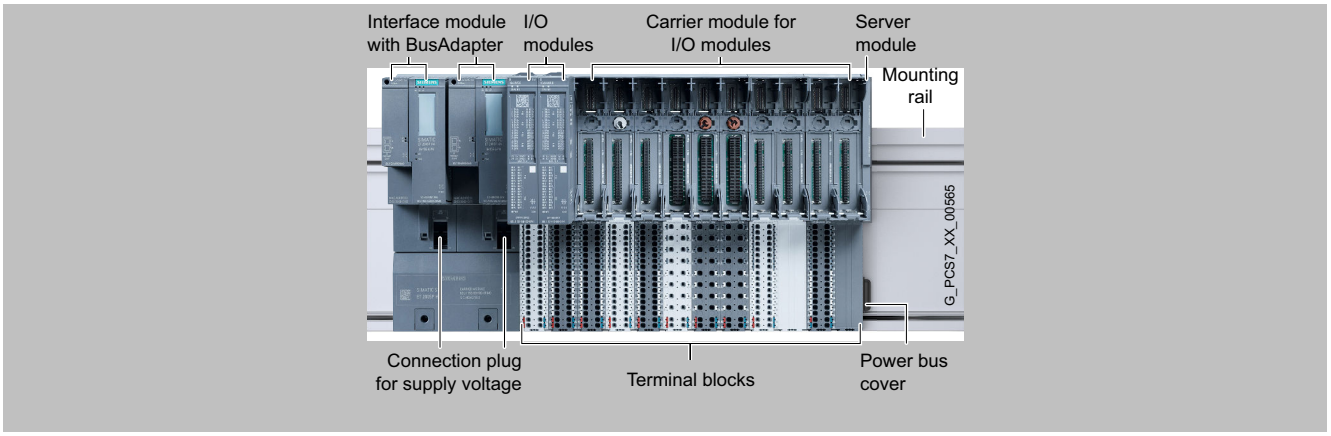

ET 200SP HA for SIMATIC PCS 7, design

Easy handling and high availability

The SIMATIC ET 200SP HA impresses with its particularly simple installation and assembly. The new terminal layout and push-in technology make tool-free wiring possible. Control cabinet configuration is particularly flexible, as the separation of mechanical and electronic components allows the station to be pre-wired without I/O modules. Empty modules can be inserted in the integrated terminal blocks and easily replaced at any time. Station extension during operation offers additional advantages for plant flexibility and availability.

In addition to the option of operating the SIMATIC ET 200SP HA station redundantly over the PROFINET interface, you can also operate the I/O modules redundantly. This option is implemented using a terminal block for integrated I/O redundancy, which is very cost-effective and saves a lot of space. The new design with standardized terminal blocks makes redundant wiring as simple as single operation.

Main components of the SIMATIC ET 200SP HA distributed I/O system

The SIMATIC ET 200SP HA distributed I/O system consists of the following components:

Mounting rail

The mounting rail is required for fitting an ET 200SP HA station in the control cabinet. The IM carrier modules for interface modules, the carrier modules for the I/O modules and the server module are attached to the mounting rail.

IM carrier module for interface modules

Two versions of the IM carrier modules are available:

- IM single carrier module for 1 interface module, for single connection to PROFINET
- IM redundant carrier module for 2 interface modules, for redundant connection to PROFINET

IM 155-6 PN interface module and BusAdapter

The interface module ensures communication between the ET 200SP HA station and the SIMATIC PCS 7 automation system (controller) over PROFINET. A BusAdapter as a separate component allows a free choice of connection technology:

- BA 2×RJ45: 2 electrical connections for bus cable with standard RJ45 connector
- BA 2×FC: 2 electrical connections for direct connection of FastConnect bus cable
- BA 2×LC: 2 optical ports for fiber-optic cables
- BA LC/RJ45: 1 optical connection and 1 electrical connection for bus cable with standard RJ45 connector
- BA LC/FC: 1 optical connection and 1 electrical connection for direct connection of FastConnect bus cable
- BA 2×RJ45 (VD): 2 electrical connections for using PROFINET via existing PROFIBUS cables
- BA 2×LC-LD: 2 × LC-LD port, for single-mode glass fiber-optic, up to max. 20 km
- BA LC-LD/RJ45: 1 × LC-LD port, for single-mode fiber-optic, up to max. 20 km, 1 × RJ45 port

Carrier module and terminal blocks for I/O modules

The slots for the I/O modules are created by connecting carrier modules and terminal blocks. The carrier modules provide the electrical and mechanical connections for the individual modules; the terminal blocks contain the process terminals for connecting sensors, actuators and other devices.

Three versions of the carrier modules are available, one with 2 slots (with power bus) and one with 8 slots (with and without power bus) for I/O modules.

The selection of available terminal blocks determines the following properties:

- Type of load voltage supply
- Formation of potential groups
- Type of required I/O module
- Redundant configuration of I/O modules

I/O modules

Modules with 8 or 16 digital channels (DI, DQ) and with 8 or 16 analog channels (AI, AQ) are available as I/O modules. A relay module (RQ) and a universal analog/digital module (AI-DI/DQ) can also be supplied.

All I/O modules with a signal voltage of up to 24 V DC can also be used redundantly.

Slot covers can be attached if I/O modules are not to be inserted in slots or slots are to be reserved for later expansion. You can insert a label strip for the planned I/O module on the front of the slot cover.

Server module and power bus cover

The server module and power bus cover complete the configuration of the ET 200SP HA station. The power bus cover protects the power bus contacts.

© Siemens AG 2024

Function

Main functions

Compact I/O modules

- Up to 32 channels on a module that is 22.5 mm wide
- Up to 56 modules per station

Perfectly suited for applications in the field

- Installation up to hazardous zone 2
- Extended temperature range: -40 to +70 °C
- Enhanced interference immunity in accordance with NAMUR recommendation NE21
- Conformal coating on all components
- Can be used at altitudes of up to 4 000 meters

Wide range of supported module types

- Digital and analog modules for standard, explosion protection and fail-safe applications with HART functionality

Redundant configurations

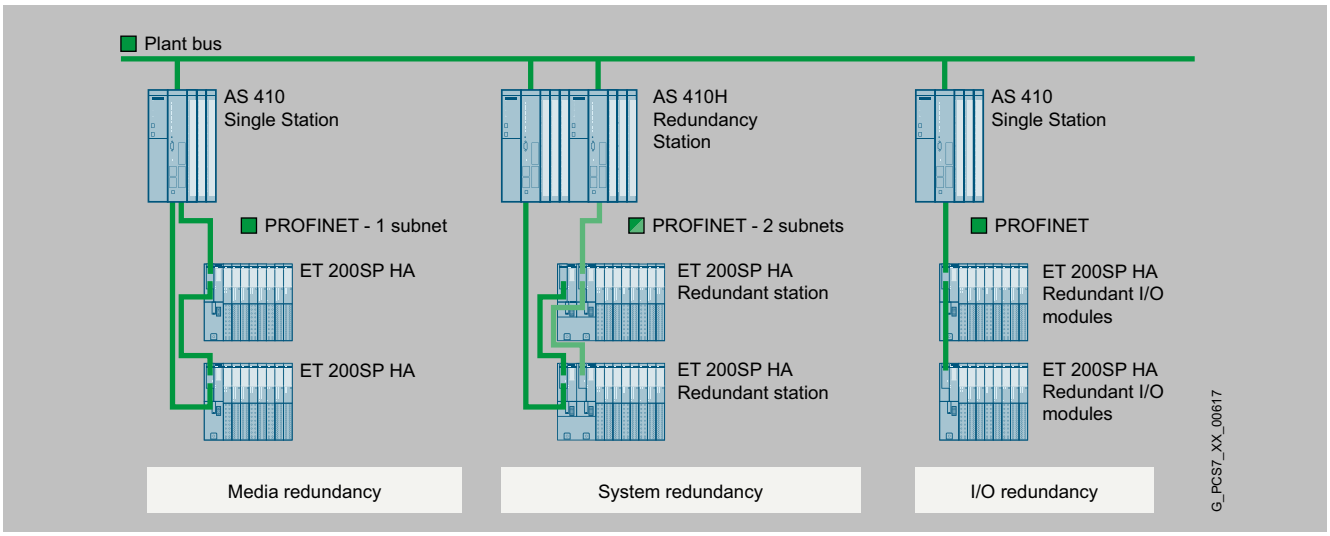

SIMATIC ET 200SP HA, basic redundant configurations

The availability of the ET 200SP HA distributed I/O can if necessary be increased with redundant configurations. A number of different configurations are possible (the individual redundant configurations can also be combined):

Media redundancy

ET 200SP HA stations with 1 interface module each are connected to an automation system in a ring topology. At least one device in the ring takes on the role of the redundancy manager; the other devices in the ring are redundancy clients. The automation system is configured as MRP manager.

If the ring topology is interrupted, the ET 200SP HA stations in the system remain available.

One of the following functions is possible during operation:

- Connecting and removing ET 200SP HA stations
- Replacing PROFINET cables

System redundancy

ET 200SP HA stations are connected to a redundant automation system. All components used redundantly are in continuous operation. If a redundancy partner fails, the function is maintained by transferring the master role or selecting a different communication path.

The ET 200SP HA stations remain available in the PROFINET IO system if a CPU or a PROFINET cable fails.

One of the following functions is possible during operation:

- Connecting and removing ET 200SP HA stations
- Replacing PROFINET cables
- Replacing a CPU

I/O redundancy

To configure I/O redundancy, 2 I/O modules of the same type are inserted beside each other in a terminal block for redundant configuration (width: 45 mm). This terminal block connects the process signals of the two modules to a common process terminal. The advantages are:

- There is less wiring work than for connecting separate I/O modules, as interconnection of the process signals is integrated in the system.
- Redundant signal processing of the sensors and actuators at a module level increases the availability of the system.

The following applies if an I/O module or a channel of one of the two I/O modules fails:

- Error-free inputs remain available in the system.
- Error-free outputs continue to be controlled in the system.

One of the following functions is possible for an I/O module in a module pair in error-free operation:

- Firmware update
- Replacing a module

© Siemens AG 2024

More information

See information on:

Catalog

https://mall.industry.siemens.com/mall/en/ww/Catalog/Products/10398144?tree=CatalogTree

Product information page

https://support.industry.siemens.com/cs/ww/en/view/109747953

© Siemens AG 2024

Overview

IM 155-6 PN HA

IM 155-6 PN HA interface module

The IM 155-6 PN HA together with the IM carrier module and the BusAdapter forms the interface of the ET 200SP HA. The interface is used for communication between the CPU and the connected ET 200SP HA I/O modules over PROFINET.

Function

Properties of the ET 200SP HA interface

The ET 200SP HA interface has the following technical features:

- 1L+ 24 V DC supply voltage (SELV/PELV). The supply voltage is fed in via the IM carrier module. The connector is included in the scope of delivery of the interface module.
- PROFINET connection over BusAdapter

The interface supports the following functions:

- Firmware update
- I&M identification data
- Adding/removing modules in RUN
- Value status QI
- I/O redundancy
- Time stamping
- Multi hot swap (removing/plugging in multiple I/O modules during operation)
- Save service data
- Recording the value status of the I/O modules
- Reference temperature distribution

The interface can be configured with HW Config.

PROFINET functions

The ET 200SP HA interface supports the following PROFINET functions:

- Integrated BusAdapter with 2 ports
- Ethernet services supported: ping, arp, network diagnostics (SNMP)/MIB-2, LLDP-MIB and MRP-MIB
- Port diagnostics
- Disabling ports
- Minimum update time 250 µs
- Device replacement without programming device
- Reset to factory settings using PROFINET IO
- System redundancy S2
- System redundancy R1
- Media redundancy (MRP)
- Support for submodules on suitable I/O modules

Selection and ordering data

Interface module	
PROFINET IM 155-6 PN interface module Max. 56 I/O modules, multi hot swap, no server module	**6DL1155-6AU00-0PM0**
Accessories	
IM cover Slot cover for interface module slots, to protect vacant slots Width 50 mm, 5 units	**6DL1133-6CV50-0AM0**

© Siemens AG 2024

Technical specifications

Article number	6DL1155-6AU00-0PM0
General information	
Product type designation	IM 155-6 PN
• Product function	
• I&M data	Yes; I&M0 to I&M3
• Engineering with	
• STEP 7 TIA Portal configurable/integrated from version	V16
• STEP 7 configurable/integrated from version	V5.6
• PCS 7 configurable/integrated from version	V9.0
• PCS neo can be configured/integrated from version	V3.0
Supply voltage	
Rated value (DC)	24 V
Reverse polarity protection	Yes
Short-circuit protection	Yes
Address area	
• Address space per station	
• Address space per station, max.	1 440 byte; 1 440 bytes R1 and S1 without CiR, otherwise 1 000 bytes
Hardware configuration	
Integrated power supply	Yes; 24 V DC
• Rack	
• Modules per rack, max.	56; 56 slots for I/O modules + server module (width without IM ≤ 1.3 m)
Time stamping	
Accuracy	1 ms; In compliance with the supplementary conditions described in the Equipment Manual
Interfaces	
Number of PROFINET interfaces	1; 2 ports (switch)
1. Interface	
• Interface types	
• Number of ports	2; via BusAdapter
• integrated switch	Yes
• BusAdapter (PROFINET)	Yes; Compatible BusAdapters: BA 2x RJ45, BA 2x FC, BA 2x LC, BA LC/RJ45, BA LC/FC, BA VD
• Protocols	
• PROFINET IO Device	Yes
• Open IE communication	Yes
• Media redundancy	Yes; as MRP client
Interface types	
• RJ 45 (Ethernet)	
• Transmission procedure	PROFINET with 100 Mbit/s full duplex (100BASE-TX)
• 100 Mbps	Yes; PROFINET with 100 Mbit/s full duplex (100BASE-TX)
• Autonegotiation	Yes
• Autocrossing	Yes
Protocols	
• Redundancy mode	
• PROFINET system redundancy (S2)	Yes; S2, R1
• Media redundancy	
• MRP	Yes
• Open IE communication	
• TCP/IP	Yes
• SNMP	Yes
• LLDP	Yes

© Siemens AG 2024

Technical specifications (continued)

Article number	6DL1155-6AU00-0PM0
Interrupts/diagnostics/status information	
Status indicator	Yes
Alarms	Yes
Diagnostics function	Yes
• Diagnostics indication LED	
• RUN LED	Yes; green LED
• ERROR LED	Yes; red LED
• MAINT LED	Yes; Yellow LED
• ACT LED	Yes; green LED
• Monitoring of the supply voltage (PWR-LED)	Yes; green PWR LED
• Connection display LINK TX/RX	Yes; 2x green link LEDs on BusAdapter
Ambient conditions	
• Ambient temperature during operation	
• horizontal installation, min.	-40 °C
• horizontal installation, max.	70 °C
• vertical installation, min.	-40 °C
• vertical installation, max.	60 °C
Dimensions	
Width	50 mm
Height	138 mm
Depth	89 mm
Weights	
Weight, approx.	192 g; without BusAdapter

© Siemens AG 2024

Overview

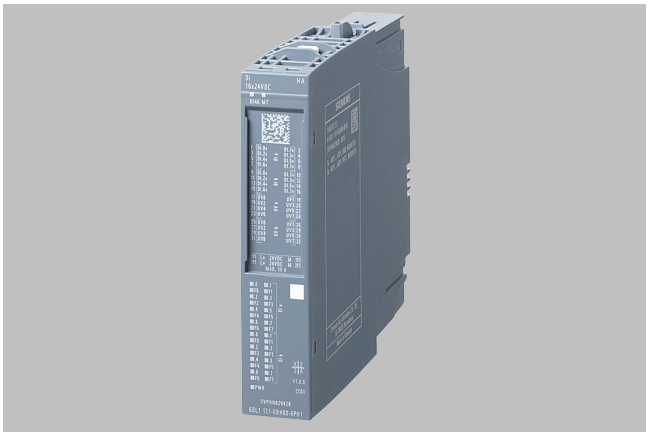

- DI 16×24VDC HA digital input module
  16 24 V DC digital inputs
- DI 32×24VDC HA digital input module
  32 24 V DC digital inputs
- DI 16×NAMUR HA digital input module
  16 NAMUR digital inputs
- DI 8×24...125VDC HA digital input module
  8 24 ... 125 V DC digital inputs
- DI 8×230VAC HA digital input module
  8 230 V AC digital inputs
- DQ 16×24VDC/0.5A HA digital output module
  16 24 V DC digital outputs, 0.5 A
- DQ 32×24VDC/0.5A HA digital output module
  32 24 V DC digital outputs, 0.5 A
- RQ 4×120VDC-230VAC/5A CO HA digital output module
  4 24 ... 120 V DC, 24 ... 230 V AC relay outputs, 5 A

© Siemens AG 2024

Design

The ET 200SP HA digital I/O modules have the following technical features:

Digital input modules DI 16×24VDC HA	DI 32×24VDC HA	DI 16×NAMUR HA	DI 8×24 to 125VDC HA	DI 8×230VAC HA
• 16 digital inputs with the following features configurable per channel: - Pulse stretching - Diagnostics - Input delay - Hardware interrupts for positive and negative edges • Sink input (PNP, P-reading) • I/O redundancy supported with terminal block type M1 and M0 (D-sub) • Diagnostics configurable per module: no supply voltage L+ • Suitable for connecting switches and 2-wire sensors in accordance with IEC 61131-2, type 1 and 3	• 32 digital inputs with the following features configurable per channel: - Pulse stretching - Diagnostics - Input delay - Hardware interrupts for positive and negative edges • Sink input (PNP, P-reading) • Diagnostics configurable per module: no supply voltage L+ • Suitable for connecting switches and 2-wire sensors in accordance with IEC 61131-2, type 1 and 3	• 16 digital inputs with the following features configurable per channel: - Pulse stretching - Hardware interrupts for positive and negative edges - Flutter monitoring • I/O redundancy supported with terminal block type M1 and M0 (D-sub) • Diagnostics for changeover contact sensor types • Diagnostics configurable per channel, even in changeover contact operation • Diagnostics configurable per module: no supply voltage L+	• 8 digital inputs isolated from the backplane bus and supply voltage L+/ M grouping 8 • Digital inputs with the following features configurable per channel: - Diagnostics - Input delay - Hardware interrupts for positive and negative edges • Rated input voltage range 24 V to 125 V DC • Diagnostics configurable per module: no supply voltage L+ • Suitable for connecting switches and 2-/3-/4-wire sensors in accordance with IEC 61131, type 1 and 3	• 8 isolated digital inputs in four groups (A to D) of two channels • Suitable for connecting switches and 2-wire sensors in accordance with IEC 61131, type 3

© Siemens AG 2024

Design (continued)

Digital output modules		
DQ 16×24VDC/0.5 A HA	DQ 32×24VDC/0.5 A HA	RQ 4×120VDC-230VAC/5-A CO HA
• 16 digital outputs with the following features configurable per channel: - Configurable diagnostics - Programmable substitute values • Source output (PNP, P-switching) • I/O redundancy supported with terminal block type M1 and M0 (D-sub) • Diagnostics configurable per module: no supply voltage L+ • Output current per channel 0.5 A • Suitable for solenoid valves, DC contactors and indicator lights	• 32 digital outputs with the following features configurable per channel: - Configurable diagnostics - Programmable substitute values • Source output (PNP, P-switching) • Diagnostics configurable per module: no supply voltage L+ • Output current per channel 0.5 A • Suitable for solenoid valves, DC contactors and indicator lights	• 4 isolated relay outputs • Changeover contact (CO: changeover) • Suitable for solenoid valves, DC contactors and indicator lights • Substitute value configurable per channel • Diagnostics configurable per module: no supply voltage L+ • Output current per output 5 A

© Siemens AG 2024

Selection and ordering data

DI 16×24VDC HA digital input module 16 24 V DC digital inputs, color code CC01, for terminal block type H1 and M1, channel diagnostics	6DL1131-6BH00-0PH1
DI 32×24VDC HA digital input module 32 24 V DC digital inputs, color code CC00, for terminal block type P0 and H1, channel diagnostics	6DL1131-6BL00-0PH1
DI 16×NAMUR HA digital input module 16 NAMUR digital inputs, color code CC01, for terminal block type H1 and M1, channel diagnostics	6DL1131-6TH00-0PH1
DI 8×24...125VDC HA digital input module 8 24 ... 125 V DC digital inputs, color code CC42, for terminal block type K0, channel diagnostics	6DL1131-6DF00-0PK0
DI 8×230VAC HA digital input module 8 230 V AC digital inputs, color code CC42, for terminal block type K0, module diagnostics	6DL1131-6GF00-0PK0
DQ 16×24VDC/0.5A HA digital output module 16 24 V DC digital outputs, 0.5 A, color code CC02, for terminal block type H1 and M1, channel diagnostics	6DL1132-6BH00-0PH1
DQ 32×24VDC/0.5A HA digital output module 32 24 V DC digital outputs, 0.5 A, color code CC00, for terminal block type N0 and H1, channel diagnostics	6DL1132-6BL00-0PH1
RQ 4×120VDC-230VAC/5A CO HA digital output module 4 24 ... 120 V DC, 24 ... 230 V AC relay outputs, 5 A, color code CC40, for terminal block type K0, module diagnostics	6DL1132-6HD50-0PK0
Accessories	
Labeling strips For labeling the I/O modules	
• Roll, light gray (with a total of 500 labeling strips), 1 unit	6DL1193-6LR00-0AA0
• DIN A4 sheet, light gray, 10 items per packing unit, 45 labeling strips per sheet (450)	6DL1193-6LA00-0AA0
• DIN A4 sheet, yellow, 10 items per packing unit, 45 labeling strips per sheet (450)	6DL1193-6LA00-0AG0
Color-coded labels For push-in terminals	
• Color code CC01, 10 units gray (terminals 1 to 16), red (terminals 17 to 32)	6DL1193-6CP01-2HH1
• Color code CC02, 10 units gray (terminals 1 to 16), blue (terminals 17 to 32)	6DL1193-6CP02-2HH1
• Color code CC40, 10 units gray (terminals 1 to 16)	6DL1193-6CP40-2HK0
• Color code CC42, 10 units gray (terminals 1 to 8), blue (terminals 9 to 16)	6DL1193-6CP42-2HK0
Equipment labeling plates 10 sheets with 16 labels each	6ES7193-6LF30-0AW0

Selection and ordering data (continued)

TM cover Slot cover for I/O modules, to protect vacant I/O slots Width 22.5 mm, 5 units	6DL1133-6CV22-0AM0

Accessories

Slot cover, labeling strips

A slot cover is inserted in a terminal block:

- When slots do not contain I/O modules
- If slots are reserved for future expansion (empty)

You can insert a labeling strip for the planned I/O module in the front of the slot cover. The labeling strips can be ordered as accessories:

- For thermal transfer printers on a roll
- For laser printers as A4 sheets

Color-coding system

Color-coded labels facilitate cable assignment and identification of the potentials of an I/O module. A color code (for example CC01) is printed on each color coding label and I/O module. The color code can be read straight off the I/O module to determine which color-coded label you need for the terminal block.

The reference identification labels in accordance with EN 81346 can be attached to interface modules, BusAdapters and I/O modules. With the standard markings for printing, the reference identification label is suitable for automatic labeling with E-CAD systems.

© Siemens AG 2024

Technical specifications

Article number	6DL1131-6GF00-0P-K0	6DL1131-6BH00-0P-H1	6DL1131-6DF00-0P-K0	6DL1131-6BL00-0P-H1	6DL1131-6TH00-0P-H1
General information					
Product type designation	DI 8x230VAC HA	DI 16x24VDC HA	DI 8x24 ... 125 V DC HA	DI 32x24VDC HA	DI 16xNAMUR HA
• Engineering with					
• STEP 7 TIA Portal configurable/integrated from version	V16	V16	V16	V16	V16
• STEP 7 configurable/integrated from version	V5.6	V5.6	V5.6	V5.6	V5.6
• PCS 7 configurable/integrated from version	V9.0	V9.0	V9.0	V9.0	V9.0
• PCS neo can be configured/integrated from version	V3.0	V3.0	V3.0	V3.0	V3.0
• PROFINET from GSD version/GSD revision	GSDML V2.3	GSDML V2.3	GSDML V2.3	GSDML V2.3	GSDML V2.3
• Operating mode					
• DI	Yes	Yes	Yes	Yes	Yes
• Counter		No	No	No	No
• Oversampling		No	No	No	
• MSI		No	No	No	
Supply voltage					
Rated value (DC)		24 V	24 V	24 V	24 V
Rated value (AC)	230 V				
Reverse polarity protection		Yes	Yes	Yes	Yes
Encoder supply					
Number of outputs		16		32; When terminal block with encoder supply is used (type P0)	16
Short-circuit protection		Yes; electronic (response threshold 0.7 A to 1.3 A; for IO redundancy up to 2.6 A) Ensure sufficient low-resistance cable routing to the sensor/actuator in order to attain the response threshold. Depending on the cable cross-section used, there may be constraints regarding the usable length of cable		Yes; When using TB type P0	Yes
• Output current					
• up to 60 °C, max.		2 A; 1 A when mounted vertically; see derating information in Equipment Manual			
• up to 70 °C, max.		1 A; See derating information in Equipment Manual			
• 24 V encoder supply					
• 24 V		Yes			
• Short-circuit protection		Yes; electronic (response threshold 0.7 A to 1.3 A; for IO redundancy up to 2.6 A) Ensure sufficient low-resistance cable routing to the sensor/actuator in order to attain the response threshold. Depending on the cable cross-section used, there may be constraints regarding the usable length of cable			

© Siemens AG 2024

Technical specifications (continued)

Article number	6DL1131-6GF00-0P-K0	6DL1131-6BH00-0P-H1	6DL1131-6DF00-0P-K0	6DL1131-6BL00-0P-H1	6DL1131-6TH00-0P-H1
• Output current per channel, max.		0.5 A			
• Output current per module, max.		2 A			
Digital inputs					
Number of digital inputs	8; Isolated	16	8	32	16; NAMUR
Digital inputs, parameterizable		Yes		Yes	Yes
Source/sink input		Yes; P-reading	Yes; P-reading	Yes; P-reading	
Input characteristic curve in accordance with IEC 61131, type 1		Yes	Yes	Yes	
Input characteristic curve in accordance with IEC 61131, type 2		No		No	
Input characteristic curve in accordance with IEC 61131, type 3	Yes	Yes	Yes	Yes	
Pulse extension		Yes		No	Yes; 0.5 s, 1 s, 2 s
• Length		off, 50 ms, 100 ms, 200 ms, 500 ms, 1 s, 2 s			
Time stamping	Yes; Resolution 10 ms	Yes; Resolution 10 ms	Yes; Resolution 10 ms		Yes; Resolution 10 ms
Time stamp (with precision of 1 ms)	No	Yes; Resolution 1ms	Yes; Resolution 1ms		No
Edge evaluation		Yes; rising edge, falling edge, edge change		Yes; rising edge, falling edge, edge change	Yes; rising edge, falling edge, edge change
Signal change flutter					Yes; 2 to 32 signal changes
Flutter observation window					Yes; 0.5 s, 1 s to 100 s in 1-s steps
• Input voltage					
• Rated value (DC)		24 V		24 V	8.2 V
• Rated value (AC)	230 V				
• for signal "0"	0V AC to 40V AC	-30 to +5 V	-125 ... +5 V	-30 to +5 V	
• for signal "1"	74 V AC to 264 V AC	+11 to +30V	+11 ... +125 V	+11 to +30V	
• Input current					
• for signal "1", typ.	10.8 mA	2.5 mA	3.1 mA	2.5 mA	
• for NAMUR encoders					
• for signal "0", min.					0.35 mA
• for signal "0", max.					1.2 mA
• for signal "1", min.					2.1 mA
• for signal "1", max.					6.4 mA
• Input delay (for rated value of input voltage)					
• tolerated changeover time for changeover contacts					300 ms
• for standard inputs					
• parameterizable		Yes; none / 0.05 / 0.1 / 0.4 / 0.8 / 1.6 / 3.2 / 12.8 / 20 ms	Yes; 0.05 / 0.1 / 0.4 / 0.8 / 1.6 / 3.2 / 12.8 / 20 ms (in each case + delay of 30 to 500 µs, depending on line length)	No	
• for NAMUR inputs					
• at "0" to "1", max.					17 ms
• at "1" to "0", max.					25 ms
Encoder					
• Connectable encoders					
• NAMUR encoder/changeover contact according to EN 60947					Yes
• Single contact / changeover contact unconnected					Yes

© Siemens AG 2024

Technical specifications (continued)

Article number	6DL1131-6GF00-0P-K0	6DL1131-6BH00-0P-H1	6DL1131-6DF00-0P-K0	6DL1131-6BL00-0P-H1	6DL1131-6TH00-0P-H1
• Single contact / changeover contact connected with 10 kΩ					Yes
• 2-wire sensor	Yes	Yes	Yes	Yes	Yes; Acc. to NAMUR
• permissible quiescent current (2-wire sensor), max.		1.5 mA	1.5 mA	1.5 mA	1.2 mA
Interrupts/diagnostics/status information					
Diagnostics function		Yes		Yes	
• Alarms					
• Diagnostic alarm	Yes	Yes; channel by channel	Yes	Yes; channel by channel	Yes; channel by channel
• Hardware interrupt		Yes; channel by channel	Yes; Parameterizable, channels 0 to 7, rising/falling edge	Yes; channel by channel	Yes; Parameterizable, channels 0 to 15, rising/falling edge
• Diagnoses					
• Diagnostic information readable	Yes	Yes	Yes	Yes	Yes
• Monitoring the supply voltage		Yes; Module-wise	Yes	Yes; Module-wise	Yes
• parameterizable		Yes		Yes	Yes
• Monitoring of encoder power supply		Yes			Yes
• Wire-break		Yes; Channel-by-channel, optional protective circuit for preventing wire-break diagnostics in the case of simple encoder contacts: 15 kOhm to 18 kOhm	Yes; channel by channel	Yes; Channel-by-channel, optional protective circuit for preventing wire-break diagnostics in the case of simple encoder contacts: 15 kOhm to 18 kOhm	Yes
• Short-circuit				No	Yes
• Short-circuit to M		Yes; Encoder supply to M, channel by channel			
• Group error			Yes		Yes
• Changeover contact error					Yes
• Diagnostics indication LED					
• MAINT LED	Yes; Yellow LED	Yes; Yellow LED	Yes; Yellow LED	Yes; Yellow LED	Yes; Yellow LED
• Monitoring of the supply voltage (PWR-LED)		Yes; green PWR LED	Yes; green PWR LED	Yes; green PWR LED	Yes; green PWR LED
• Channel status display	Yes; green LED	Yes; green LED	Yes; green LED	Yes; green LED	Yes; green LED
• for channel diagnostics		Yes; red LED	Yes; red LED	No	Yes; red LED
• for module diagnostics	Yes; green/red DIAG LED	Yes; green/red LED	Yes; green/red DIAG LED	Yes; green/red DIAG LED	Yes; green/red DIAG LED
Potential separation					
• Potential separation channels					
• between the channels and backplane bus	Yes	Yes	Yes	Yes	Yes
Ambient conditions					
• Ambient temperature during operation					
• horizontal installation, min.	-40 °C	-40 °C	-40 °C	-40 °C	-40 °C
• horizontal installation, max.	70 °C	70 °C	70 °C	70 °C	70 °C
• vertical installation, min.	-40 °C	-40 °C	-40 °C	-40 °C	-40 °C
• vertical installation, max.	60 °C	60 °C	60 °C	60 °C	60 °C
Dimensions					
Width	22.5 mm	22.5 mm	22.5 mm	22.5 mm	22.5 mm
Height	115 mm	115 mm	115 mm	115 mm	115 mm
Depth	138 mm	138 mm	138 mm	138 mm	138 mm
Weights					
Weight, approx.	148 g	135 g	165 g	150 g	153 g

© Siemens AG 2024

Overview

- AI 8×U/I/TC/4×RTD 2-/4-wire HA analog input module

  8 analog inputs

  Measuring range: Voltage: 1 ... 5 V, 0 ... 10 V, ±50 mV, ±80 mV, ±250 mV, ±500 mV, ±1 V, ±2.5 V, ±5 V, ±10 V; current: 4 ... 20 mA (2-/4-wire); und 0 ... 20 mA (4-wire), ±20 mA (4-wire); TC elements: B, C, N, E, R, S, J, L, T, K, U, TXK; RTD elements: Pt100, Pt200, Pt500, Pt1000, Ni100, Ni120, Ni200, Ni500, Ni1000, Cu10, LG-Ni1000 | resistance areas: 150, 300, 600, 3000, 6000 Ohm | PTC

- AI 16×I 2-wire HA analog input module

  16 analog inputs

  Measuring range 4 ... 20 mA; 0 ... 10 mA; 0 ... 20 mA

- AI 16×I 2-wire HART HA analog input module

  16 analog inputs

  Measuring range 0 to 20 mA, 0 to 10 mA, 4 to 20 mA, 4 to 20 mA with HART

- AI 16×TC/8×RTD 2-/3-/4-wire HA analog input module

  16 analog inputs for thermocouples; alternatively 8 analog inputs for thermistors

- AI 16×I 2-wire HA analog input module

  16 analog inputs

  Measuring range 0 to 20 mA, 0 to 10 mA, 4 to 20 mA

- AI 16×I 2-wire HA analog input module

  8 analog inputs for voltage measurements. current measurements, thermocouples, alternatively 4 analog inputs for thermistors

- AQ 8×I HART HA analog output module

  8 analog outputs

  Power output in the output ranges 0 to 10 mA, 0 to 20 mA, 4 to 20 mA and 4 to 20 mA HART

- AI 4XI 2-/4-wire HART ISOL analog input module

  4 galvanically isolated analog inputs (2-/4-wire)

- Analog output module AQ 4XI HART ISOL

  4 galvanically isolated analog outputs (2-wire)

© Siemens AG 2024

Design

The ET 200SP HA analog I/O modules have the following technical properties:

Analog input modules AI 8×U/I/TC/4×RTD 2-/4-wire HA	AI 16xI 2-wire HA
• 8 analog inputs for measuring voltages, current and temperatures • Measuring ranges: - Voltage: 1 ... 5 V, 0 ... 10 V, ±50 mV, ±80 mV, ±250 mV, ±500 mV, ±1 V, ±2.5 V, ±5 V, ±10 V - Current: 4 ... 20 mA (2-/4-wire); und 0 ... 20 mA (4-wire), ±20 mA (4-wire) - TC elements: B, C, N, E, R, S, J, L, T, K, U, TXK - RTD elements: Pt100, Pt200, Pt500, Pt1000, Ni100, Ni120, Ni200, Ni500, Ni1000, Cu10, LG-Ni1000 | resistance areas: 150, 300, 600, 3000, 6000 Ohm | PTC • Suitable for terminal block H1, N0, H0 • Resolution: 16-bit including sign • Common-mode rejection of 15 V • External sensor power supply possible • Configurable diagnostics	• 16 analog inputs for measuring current: • Measuring ranges: Current: 4 ... 20 mA; 0 ... 10 mA; 0 ... 20 mA • Suitable for terminal block H1, P0 • Resolution: 16-bit including sign • External sensor power supply possible • Configurable diagnostics

Analog input modules AI 16×I 2-wire HART HA	AI 16×TC/8×RTD 2-/3-/4-wire HA	AI 4XI 2-/4-wire HART ISOL
• 16 analog inputs • 16 outputs as encoder supply for 2-wire transducer • The analog inputs have the following properties, configurable per channel: - Current measurement type for 2-wire HART measuring transducer - Measuring range 0 to 20 mA, 0 to 10 mA, 4 to 20 mA and 4 to 20 mA with HART - Resolution depends on measuring range and interference frequency suppression; minimum of 15 bits including sign, maximum of 16 bits including sign - Smoothing - Interference frequency suppression 10 Hz, 50 Hz and 60 Hz • I/O redundancy supported with terminal block type M1 and M0 (D-sub)	• 16 analog inputs for connecting thermocouples (TC) • Alternatively 8 analog inputs for connecting thermistors (RTD) • The analog inputs have the following properties, configurable per channel: - Resolution: 16 bits including sign - "Voltage" measurement type - "Resistance" measurement type, 2-/3-/4-wire connection - "Thermistor" (RTD) measurement type, 2-/3-/4-wire connection - "Thermocouple" (TC) measurement type can be set per channel - Smoothing - Interference frequency suppression 16.6 Hz, 50 Hz or 60 Hz	• 4 galvanically isolated analog inputs (2-/4-wire) • Electric potential difference up to 125 V AC / 150 V DC (between the channels) and 125 V AC / 150 V DC (between channels and backplane bus) • Inputs: - 0 ... 10 mA, 0 ... 20 mA, 4 ... 20 mA, 4 ... 20 mA with HART - 4x sensor supply with short-circuit limitation 24 mA - A/D conversion with 16-bit resolution - 4x HART modems with parallel processing, up to 16 HART variables • I/O redundancy supported with terminal block type L0 and R0 (D-sub)

© Siemens AG 2024

Design (continued)

Analog input modules AI 16×I 2-wire HART HA	AI 16×TC/8×RTD 2-/3-/4-wire HA	AI 4XI 2-/4-wire HART ISOL
• Diagnostics configurable per channel • Diagnostics configurable per module: no supply voltage L+ • Hardware interrupt	• I/O redundancy supported with terminal block type M1 and M0 (D-sub) • Diagnostics configurable per channel • Diagnostics configurable per module: no supply voltage L+ • Permissible common mode voltage between channels: 75 V DC / 60 V AC • Temperature compensation: - Reference channel of the module - Internal reference junction - Fixed temperature (0 °C) • Conversion time depends on noise suppression of 16.6/50/60 Hz at 180/60/50 ms that can be set by channel. (With 3-wire measuring transducers, the time is twice as long as 2 measurements are required per channel). • Max. cable length RTD, TC: 600 m • Hardware interrupt on limit violation per channel (two high and two low limits per channel) • Automatic compensation of wire resistances with 3-wire connections	• Channel-selective diagnostics: - Sensor supply, short-circuit to ground, wire break, short-circuit between sensor supply and input, overflow and underflow

Analog output modules AQ 8×I HART HA	AQ 4XI HART ISOL
• Analog output module with 8 outputs (8 D/A converters operating in parallel) • Current output in output ranges 0 to 10 mA, 0 to 20 mA, 4 to 20 mA and 4 to 20 mA HART • Resolution 16 bits including sign • Rated supply voltage 24 V DC • Output load max. 750 Ω, max. 10 mH • I/O redundancy supported with terminal block type M1 and M0 (D-sub) • Diagnostics configurable per channel • Diagnostics configurable per module: no supply voltage L+	• 4 galvanically isolated analog outputs (2-wire) • Electric potential difference up to 125 V AC / 150 V DC (between the channels) and 125 V AC / 150 V DC (between channels and backplane bus) • Inputs: - 0 ... 10 mA, 0 ... 20 mA, 4 ... 20 mA, 4 ... 20 mA with HART - A/D conversion with 16-bit resolution - 4x HART modems with parallel processing, up to 16 HART variables • I/O redundancy supported with terminal block type L0 and R0 (D-sub) • Channel-selective diagnostics: - Short-circuit to ground, wire break, overflow and underflow

© Siemens AG 2024

Selection and ordering data

AI 8×U/I/TC/4×RTD 2-/4-wire HA analog input module 8 analog inputs Measuring ranges: • Voltage: 1 ... 5 V, 0 ... 10 V, ±50 mV, ±80 mV, ±250 mV, ±500 mV, ±1 V, ±2.5 V, ±5 V, ±10 V • Current: 4 ... 20 mA (2-/4-wire); und 0 ... 20 mA (4-wire), ±20 mA (4-wire) • TC elements: B, C, N, E, R, S, J, L, T, K, U, TXK • RTD elements: Pt100, Pt200, Pt500, Pt1000, Ni100, Ni120, Ni200, Ni500, Ni1000, Cu10, LG-Ni1000 | resistance areas: 150, 300, 600, 3000, 6000 Ohm | PTC Color code CC00, for terminal block type H1, N0 and H0, channel diagnostics, 16-bit	6DL1134-6AF00-0PH1
AI 16×I 2-wire HA analog input module 16 analog inputs Measuring range 4 ... 20 mA; 0 ... 10 mA; 0 ... 20 mA Color code CC01, for terminal block type H1 and P1, channel diagnostics, 16-bit	6DL1134-6GH00-0PH1
AI 16×I 2-wire HART HA analog input module 16 analog inputs Measuring range 0 to 20 mA, 0 to 10 mA, 4 to 20 mA, 4 to 20 mA with HART Color code CC01, for terminal block type H1 and M1, channel diagnostics, 16-bit	6DL1134-6TH00-0PH1
AI 16×TC/8×RTD 2-/3-/4-wire HA analog input module 16 analog inputs for thermocouples, alternatively 8 analog inputs for thermistors Color code CC00, for terminal block type H1 and M1, channel diagnostics, 16-bit	6DL1134-6JH00-0PH1
AQ 8×I HART HA analog output module 8 analog outputs Power output in the output ranges 0 to 10 mA, 0 to 20 mA, 4 to 20 mA and 4 to 20 mA HART Color code CC00, for terminal block type H1 and M1, channel diagnostics, 16-bit	6DL1135-6TF00-0PH1
AI 4XI 2-/4-wire HART ISOL analog input module 14 analog inputs Color code CC01, for terminal block type K0, L0, channel diagnostics, 16-bit, +/-0.1%	6DL1134-6UD00-0PK0
Analog output module AQ 4XI HART ISOL 4 analog outputs Color code CC00, for terminal block type K0, L0, channel diagnostics, 16-bit, +/-0.1%	6DL1135-6UD00-0PK0
Accessories	
Labeling strips For labeling the I/O modules	
• Roll, light gray (with a total of 500 labeling strips), 1 unit	6DL1193-6LR00-0AA0

Selection and ordering data (continued)

• DIN A4 sheet, light gray, 10 items per packing unit, 45 labeling strips per sheet (450)	6DL1193-6LA00-0AA0
• DIN A4 sheet, yellow, 10 items per packing unit, 45 labeling strips per sheet (450)	6DL1193-6LA00-0AG0
Color-coded labels For push-in terminals	
• Color code CC00, 10 units gray (terminals 1 to 32)	6DL1193-6CP00-2HH1
• Color code CC01, 10 units gray (terminals 1 to 16), red (terminals 17 to 32)	6DL1193-6CP01-2HH1
Equipment labeling plates 10 sheets with 16 labels each	6ES7193-6LF30-0AW0
TM cover Slot cover for I/O modules, to protect vacant I/O slots Width 22.5 mm, 5 units	6DL1133-6CV22-0AM0

© Siemens AG 2024

Technical specifications

Article number	6DL1134-6GH00-0PH1
General information	
Product type designation	AI 16xI 2-wire HA
• Engineering with	
• STEP 7 TIA Portal configurable/integrated from version	V18
• STEP 7 configurable/integrated from version	V5.6
• PCS 7 configurable/integrated from version	V9.1 SP2
• PCS neo can be configured/integrated from version	V4.0
• PROFINET from GSD version/GSD revision	GSDML V2.42 2023.01
• Operating mode	
• Oversampling	No
• MSI	No
Supply voltage	
Rated value (DC)	24 V
Reverse polarity protection	Yes
Encoder supply	
Number of outputs	16
Short-circuit protection	Yes
Analog inputs	
Number of analog inputs	16
• For current measurement	16
permissible input current for current input (destruction limit), max.	30 mA
Cycle time (all channels), min.	400 ms
• Input ranges (rated values), currents	
• 0 to 20 mA	Yes; 16 bit incl. sign
• 4 mA to 20 mA	Yes; 16 bit incl. sign
• Cable length	
• shielded, max.	800 m
• unshielded, max.	200 m
Analog value generation for the inputs	
• Integration and conversion time/resolution per channel	
• Resolution with overrange (bit including sign), max.	16 bit; 15 bit at 0 ... 10 mA and 60 Hz interference suppression
• Integration time, parameterizable	Yes; channel by channel
• Integration time (ms)	16.6 / 20 / 100 ms
• Smoothing of measured values	
• parameterizable	Yes; none, weak, medium, strong, channel-by-channel
Encoder	
• Connection of signal encoders	
• for current measurement as 2-wire transducer	Yes
Errors/accuracies	
• Basic error limit (operational limit at 25 °C)	
• Current, relative to input range, (+/-)	0.3 %
Interrupts/diagnostics/status information	
• Alarms	
• Diagnostic alarm	Yes
• Limit value alarm	No
• Diagnoses	
• Monitoring the supply voltage	Yes
• Wire-break	Yes; channel-by-channel, at 4 to 20 mA only
• Short-circuit	No
• Overflow/underflow	Yes; channel by channel

© Siemens AG 2024

Technical specifications (continued)

Article number	6DL1134-6GH00-0PH1
• Diagnostics indication LED	
• MAINT LED	Yes; Yellow LED
• Monitoring of the supply voltage (PWR-LED)	Yes; green PWR LED
• Channel status display	Yes; green LED
• for channel diagnostics	Yes; red LED
• for module diagnostics	Yes; green/red DIAG LED
Potential separation	
• Potential separation analog inputs	
• between the channels and backplane bus	Yes
• Potential separation channels	
• between the channels and backplane bus	Yes
Ambient conditions	
• Ambient temperature during operation	
• horizontal installation, min.	-40 °C
• horizontal installation, max.	70 °C
• vertical installation, min.	-40 °C
• vertical installation, max.	60 °C
Dimensions	
Width	22.5 mm
Height	115 mm
Depth	138 mm
Weights	
Weight, approx.	148 g

© Siemens AG 2024

Overview

The I/O module AI-DI 16/DQ16×24VDC HART HA is available in the following versions:

- DI 16/DQ16x24VDC HA in digital-only mode
- AI-DI 16/DQ 16x24VDC HART HA as digital/analog module in mixed mode

Time stamping is available with configuration in mixed mode. High-precision time stamping (SoE: Sequence of Events) with a precision of 1 ms is available with configuration in digital-only mode.

In mixed mode, the 16 inputs can also be set channel by channel as either digital inputs or analog inputs with or without HART. HART is only available in mixed mode and with configuration in a measuring range of 4 to 20 mA.

Design

The AI-DI 16/DQ16×24 V DC HART HA analog/digital module has the following technical features:

- 16 inputs configurable as digital or analog inputs
- Digital inputs with the following features configurable per channel:
  - Pulse stretching
  - Time stamping in mixed mode
  - Time stamping with a precision of 1 ms in digital-only mode
  - Hardware interrupts for positive and negative edges
  - Input delay
- Analog inputs with the following features configurable per channel:
  - Current measurement type for 2-wire measuring transducer
  - Measuring ranges 0 to 20 mA, 0 to 10 mA, 4 to 20 mA or 4 to 20 mA with HART
  - Resolution depends on measuring range and interference frequency suppression; minimum of 15 bits, maximum of 16 bits including sign
  - Hardware interrupts for monitoring configurable limits
  - Smoothing
  - Interference frequency suppression 10 Hz, 50 Hz or 60 Hz
  - Configurable wire break limit
- 16 outputs configurable as digital outputs or as sensor supplies for analog current measurement
  - Substitute value configurable per channel for the digital outputs
- Diagnostics configurable per channel
- Diagnostics configurable per module: no supply voltage L+

© Siemens AG 2024

Selection and ordering data

AI-DI 16/DQ16×24VDC HART HA input/output module 16 channels, each with digital output and digital/analog input Color code CC01, for terminal block type H1 and M1	**6DL1133-6EW00-0PH1**
Accessories	
Labeling strips For labeling the I/O modules	
• Roll, light gray (with a total of 500 labeling strips), 1 unit	**6DL1193-6LR00-0AA0**
• DIN A4 sheet, light gray, 10 items per packing unit, 45 labeling strips per sheet (450)	**6DL1193-6LA00-0AA0**
• DIN A4 sheet, yellow, 10 items per packing unit, 45 labeling strips per sheet (450)	**6DL1193-6LA00-0AG0**
Color-coded labels For push-in terminals	
• Color code CC01, 10 units gray (terminals 1 to 16), red (terminals 17 to 32)	**6DL1193-6CP01-2HH1**
Equipment labeling plates 10 sheets with 16 labels each	**6ES7193-6LF30-0AW0**
Slot cover for I/O modules 22.5 mm wide	**6DL1133-6CV22-0AM0**

© Siemens AG 2024

Technical specifications

Article number	6DL1133-6EW00-0PH1
General information	
Product type designation	AI-DI 16/DQ 16x24VDC HART HA
• Engineering with	
• STEP 7 TIA Portal configurable/integrated from version	V16
• STEP 7 configurable/integrated from version	V5.6
• PCS 7 configurable/integrated from version	V9.0
• PCS neo can be configured/integrated from version	V3.0
• PROFINET from GSD version/GSD revision	GSDML V2.3
• Operating mode	
• DI	Yes
• Counter	Yes
• DQ	Yes
• DQ with energy-saving function	No
• PWM	No
• Oversampling	No
• MSI	No
• MSO	No
Supply voltage	
Rated value (DC)	24 V
Reverse polarity protection	Yes
Encoder supply	
Number of outputs	16
Short-circuit protection	Yes; per channel, electronic
Digital inputs	
Number of digital inputs	16
Digital inputs, parameterizable	Yes
Source/sink input	Yes; P-reading
Input characteristic curve in accordance with IEC 61131, type 1	Yes
Input characteristic curve in accordance with IEC 61131, type 2	No
Input characteristic curve in accordance with IEC 61131, type 3	Yes
Pulse extension	Yes; off, 50 ms, 100 ms, 200 ms, 500 ms, 1 s, 2 s
Time stamping	Yes; Resolution 10 ms
Time stamp (with precision of 1 ms)	Yes; Resolution 1ms
• Digital input functions, parameterizable	
• Gate start/stop	Yes; Partner channel of n+8 counter
• Freely usable digital input	Yes; Parameterizable input filter
• Counter	Yes; Incl. frequency measurement
• Input voltage	
• Rated value (DC)	24 V
• for signal "0"	-30 to +5 V
• for signal "1"	+11 to +30V
• Input current	
• for signal "1", typ.	2.5 mA
• Input delay (for rated value of input voltage)	
• for standard inputs	
• parameterizable	Yes; 0.05 / 0.1 / 0.4 / 0.8 / 1.6 / 3.2 / 12.8 / 20 ms (in each case + delay of 30 to 500 µs, depending on line length)
Digital outputs	
Number of digital outputs	16
Current-sinking	No

© Siemens AG 2024

Technical specifications (continued)

Article number	6DL1133-6EW00-0PH1
Current-sourcing	Yes
Digital outputs, parameterizable	Yes
Short-circuit protection	Yes; Response threshold 0.7 A to 1.3 A
Open-circuit detection	Yes
Overload protection	Yes
Limitation of inductive shutdown voltage to	L+ -(37 to 41V)
Controlling a digital input	Yes
• Switching capacity of the outputs	
• with resistive load, max.	0.5 A
• on lamp load, max.	5 W
• Load resistance range	
• lower limit	48 Ω
• upper limit	12 kΩ
• Output current	
• for signal "1" rated value	0.5 A
• for signal "0" residual current, max.	0.7 mA
• Output delay with resistive load	
• "0" to "1", typ.	50 µs
• "1" to "0", typ.	100 µs
• Parallel switching of two outputs	
• for uprating	No
• for redundant control of a load	Yes
• Switching frequency	
• with resistive load, max.	100 Hz
• on lamp load, max.	10 Hz
• Total current of the outputs	
• Current per channel, max.	0.5 A
• Current per module, max.	2 A
Analog inputs	
Number of analog inputs	16
permissible input current for current input (destruction limit), max.	30 mA
• Input ranges	
• Current	Yes; 0 ... 10 mA, 0 ... 20 mA, 4 ... 20 mA, 4 ... 20 mA HART
• Input ranges (rated values), currents	
• 0 to 10 mA	Yes
• 0 to 20 mA	Yes; 16 bit incl. sign
• 4 mA to 20 mA	Yes; 16 bit incl. sign
Analog value generation for the inputs	
• Integration and conversion time/resolution per channel	
• Resolution with overrange (bit including sign), max.	16 bit; Resolution with overrange (bit including sign), max. 16 bits, exception: 15 bits at 60 Hz interference suppression and 0 to 10 mA
• Integration time, parameterizable	Yes; channel by channel
• Smoothing of measured values	
• parameterizable	Yes; none, weak, medium, strong, channel-by-channel
Encoder	
• Connection of signal encoders	
• for current measurement as 2-wire transducer	Yes
• Connectable encoders	
• 2-wire sensor	Yes
• permissible quiescent current (2-wire sensor), max.	1.5 mA

© Siemens AG 2024

Technical specifications (continued)

Article number	6DL1133-6EW00-0PH1
Errors/accuracies	
• Basic error limit (operational limit at 25 °C)	
• Current, relative to input range, (+/-)	0.1 %
Interrupts/diagnostics/status information	
Diagnostics function	Yes
Substitute values connectable	Yes
• Alarms	
• Diagnostic alarm	Yes
• Maintenance interrupt	Yes
• Limit value alarm	Yes; two upper and two lower limit values in each case
• Hardware interrupt	Yes; Parameterizable, channels 0 to 15, rising/falling edge
• Diagnoses	
• Monitoring the supply voltage	Yes
• Wire-break	Yes; channel by channel
• Short-circuit to M	Yes; Encoder supply to M, channel by channel
• Group error	Yes
• Overflow/underflow	Yes; channel by channel
• Diagnostics indication LED	
• MAINT LED	Yes; Yellow LED
• Monitoring of the supply voltage (PWR-LED)	Yes; green PWR LED
• Channel status display	No
• for channel diagnostics	No
• for module diagnostics	Yes; green/red DIAG LED
Integrated Functions	
Frequency measurement	Yes
• Number of frequency meters	8
• Counting functions	
• Continuous counting	Yes
• Counter response parameterizable	Yes
• Hardware gate via digital input	Yes; Via partner channel (digital input n+8)
• Software gate	Yes
• Measuring functions	
• Dynamic measurement period adjustment	Yes
• Measuring range	
• Frequency measurement, min.	0.1 Hz
• Frequency measurement, max.	5 kHz
• Accuracy	
• Frequency measurement	100 ppm; depending on measuring interval and signal evaluation
Potential separation	
• Potential separation channels	
• between the channels and backplane bus	Yes
Ambient conditions	
• Ambient temperature during operation	
• horizontal installation, min.	-40 °C
• horizontal installation, max.	70 °C; Observe derating
• vertical installation, min.	-40 °C
• vertical installation, max.	60 °C; Observe derating

© Siemens AG 2024

Technical specifications (continued)

Article number	6DL1133-6EW00-0PH1
Dimensions	
Width	22.5 mm
Height	115 mm
Depth	138 mm
Weights	
Weight, approx.	150 g

© Siemens AG 2024

Overview

ET 200SP HA Fast Multi IO & Counter

- Analog/digital module, input/output, counter, speed measurement
- 8 analog outputs (up to 800 Hz)
  Measuring range: 4x 0/4-20 mA, ±20 mA, ±50 mA and 4x ±10 V
- 4 analog inputs
  Measuring ranges: 0/4-20 mA, ±20 mA, ±30 mA, ±10 V, 0-20 V, -20-0 V
- Sensor supply: ±50 mA via digital output
- 4 digital inputs 24 V
- 3 counters up to 70 kHz
  Counter functions: up/down, once/periodic, gate control, 32-bit
- 6 combined digital inputs and outputs (DI/DQ)

ET 200SP HA vibration protection

- Analog/digital module, input/output, vibration protection
- Vibration protection for rotating machinery (e.g. drives, compressors, gears, fans)
- 4 analog inputs (up to 50 kHz signal frequency)
  Measuring ranges: 0/4-20 mA, ±20 mA, ±30 mA, ±10 V, 0-20 V, -20-0 V
  Suitable for electrodynamic and piezoelectric vibration sensors

Overview (continued)

- Sensor supply: ±50 mA
- Integrated signal processing:
  10 configurable function sequences for calculation of vibration-specific performance characteristics (simultaneous use 8 function sequences per module)
- 4 analog inputs
  Measuring ranges: 0/4-20 mA, ±20 mA, ±30 mA, ±10 V, 0-20 V, -20-0 V
- 8 analog outputs (up to 800 Hz)
  Measuring range: 4x 0/4-20 mA, ±20 mA, ±50 mA and 4x ±10 V
- Sensor supply: ±50 mA via digital output
- 4 digital inputs 24 V
- 6 combined digital inputs and outputs (DI/DQ)

Selection and ordering data

ET 200SP HA TM Fast Multi IO & Counter 4xAI, 8xAQ, 4xDI, 6xDI/DQ Color code CC00, terminal block type H1 and M1	**6DL1138-6EA00-0EH1**
ET 200SP HA vibration protection 4xAI, 8xAQ, 4xDI, 6xDI/DQ Color code CC00, terminal block type H1 and M1	**6DL1138-6EC00-0EH1**

© Siemens AG 2024

Technical specifications

Article number	6DL1138-6EA00-0EH1	6DL1138-6EC00-0EH1
General information		
Product type designation	Fast Multi IO & Counter	Vibration protection module 4 channels
• Product function		
• Isochronous mode	No	No
• Engineering with		
• SPPA-T3000 can be configured/integrated from version	V8.2 SP2	V8.2 SP2
• Operating mode		
• DI	Yes	Yes
• Counter	Yes	
• DQ	Yes	Yes
Supply voltage		
Rated value (DC)	24 V	24 V
Reverse polarity protection	Yes	Yes
Encoder supply		
Number of outputs	6; max. depending on parameterization	6; max. depending on parameterization
Short-circuit protection	Yes; per channel, electronic	Yes; per channel, electronic
Digital inputs		
Number of digital inputs	10; Of these, 6 combined DI/DQ	10; Of these, 6 combined DI/DQ
Digital inputs, parameterizable	Yes	Yes
Source/sink input	Yes; DI0 ... DI3 (param.); sinking DIDQ4 ... DIDQ9	Yes; DI0 ... DI3 (param.); sinking DIDQ4 ... DIDQ9
Input characteristic curve in accordance with IEC 61131, type 1	Yes	Yes
Pulse extension	Yes	Yes
• Length	2 s; off, 50 ms, 100 ms, 200 ms, 500 ms, 1 s, 2 s	2 s; off, 50 ms, 100 ms, 200 ms, 500 ms, 1 s, 2 s
• Digital input functions, parameterizable		
• Gate start/stop	Yes; Selectable: Standard DI, encoder signals A, B, N, gate start, gate stop, set counter	
• Freely usable digital input	Yes	
• Counter	Yes	
• Input voltage		
• Rated value (DC)	24 V	24 V
• for signal "0"	0 ... 5 V	0 ... 5 V
• for signal "1"	+11 to +30V	+11 to +30V
• Input current		
• for signal "1", typ.	2.6 mA; 2.6 mA DI, 3.5 mA DIDQ	2.6 mA; 2.6 mA DI, 3.5 mA DIDQ
• Input delay (for rated value of input voltage)		
• for standard inputs		
• parameterizable	Yes; 0.05 / 0.1 / 0.4 / 0.8 / 1.6 / 3.2 / 12.8 / 20 ms (in each case + delay of 30 to 500 µs, depending on line length)	Yes; 0.05 / 0.1 / 0.4 / 0.8 / 1.6 / 3.2 / 12.8 / 20 ms (in each case + delay of 30 to 500 µs, depending on line length)
• for technological functions		
• parameterizable	Yes; Adjustable filter: 5 µs, 25 µs	
Digital outputs		
Number of digital outputs	6; max. depending on parameterization	6; max. depending on parameterization
Current-sinking	No	No
Current-sourcing	Yes	Yes
Digital outputs, parameterizable	Yes	Yes
Short-circuit protection	Yes	Yes
Open-circuit detection	Yes	Yes
Overload protection	Yes	Yes
Limitation of inductive shutdown voltage to	L+ -(37 to 41V)	L+ -(37 to 41V)
Controlling a digital input	Yes	Yes

© Siemens AG 2024

Technical specifications (continued)

Article number	6DL1138-6EA00-0EH1	6DL1138-6EC00-0EH1
• Digital output functions, parameterizable		
• Switching tripped by comparison values	Yes; As output signal of a high-speed counter	
• Freely usable digital output	Yes	Yes
• Switching capacity of the outputs		
• with resistive load, max.	0.5 A	0.5 A
• Load resistance range		
• lower limit	48 Ω	48 Ω
• Output voltage		
• for signal "1", min.	18.1 V	18.1 V
• Output current		
• for signal "1" rated value	0.5 A	0.5 A
• Output delay with resistive load		
• "0" to "1", typ.	1 ms	1 ms
• "1" to "0", typ.	100 µs	100 µs
• Parallel switching of two outputs		
• for logic links	No	
• for uprating	No	
• for redundant control of a load	Yes	
• Switching frequency		
• with resistive load, max.	800 Hz	800 Hz
• Total current of the outputs		
• Current per channel, max.	0.5 A	0.5 A
• Current per module, max.	2 A	2 A
Analog inputs		
Number of analog inputs	4	4
permissible input voltage for voltage input (destruction limit), max.	30 V	30 V
permissible input current for current input (destruction limit), max.	50 mA; Protection available against destruction	50 mA; Protection available against destruction
Cycle time (all channels), min.		1.25 ms; For up to 128 samples per channel
• Input ranges		
• Voltage	Yes; 0 ... 10 V, -10 ... 10 V, 0 ... 20 V, -20 ... 0 V	Yes; 0 ... 10 V, -10 ... 10 V, 0 ... 20 V, -20 ... 0 V
• Current	Yes; 0 ... 20 mA, 4 ... 20 mA, -20 ... 20 mA, -30 ... 30 mA, -20 ... 0 mA	Yes; 0 ... 20 mA, 4 ... 20 mA, -20 ... 20 mA, -30 ... 30 mA, -20 ... 0 mA
• Input ranges (rated values), voltages		
• 0 to +10 V	Yes	Yes
• -10 V to +10 V	Yes	Yes
• Input ranges (rated values), currents		
• 0 to 20 mA	Yes; 0 mA or 4 mA to 20 mA	Yes; 0 mA or 4 mA to 20 mA
• -20 mA to +20 mA	Yes	Yes
• 4 mA to 20 mA	Yes; and 0 to 20 mA	Yes; and 0 to 20 mA
• Cable length		
• shielded, max.	600 m	600 m
Analog outputs		
Number of analog outputs	8; 4 AQ-I, 4 AQ-U	8; 4 AQ-I, 4 AQ-U
Cycle time (all channels), min.		625 µs
Current signal at analog output	Yes; -50 ... 50 mA	Yes; -50 ... 50 mA
• Output ranges, voltage		
• -10 V to +10 V	Yes	Yes

© Siemens AG 2024

Technical specifications (continued)

Article number	6DL1138-6EA00-0EH1	6DL1138-6EC00-0EH1
• Output ranges, current		
• 0 to 20 mA	Yes	Yes
• -20 mA to +20 mA	Yes; ±30 mA, ±50 mA	Yes; ±30 mA, ±50 mA
• 4 mA to 20 mA	Yes	Yes
• Connection of actuators		
• for voltage output two-wire connection	Yes	Yes
• Load impedance (in rated range of output)		
• with current outputs, max.	330 Ω; 150 ohms at ±50 mA	330 Ω; 150 ohms at ±50 mA
Analog value generation for the inputs		
• Integration and conversion time/resolution per channel		
• Resolution with overrange (bit including sign), max.	24 bit	24 bit
• Smoothing of measured values		
• parameterizable	Yes	Yes
Analog value generation for the outputs		
• Integration and conversion time/resolution per channel		
• Resolution with overrange (bit including sign), max.	16 bit	16 bit
Encoder		
• Connection of signal encoders		
• for voltage measurement	Yes	Yes
• for current measurement as 2-wire transducer	Yes	Yes
• for current measurement as 4-wire transducer		Yes
• Connectable encoders		
• Single contact / changeover contact unconnected	Yes	Yes
• 2-wire sensor	Yes	Yes
• permissible quiescent current (2-wire sensor), max.	1.5 mA	1.5 mA
Interrupts/diagnostics/status information		
Diagnostics function	Yes	Yes
Substitute values connectable	Yes	Yes
• Alarms		
• Diagnostic alarm	Yes	Yes
• Diagnoses		
• Monitoring the supply voltage	Yes	Yes
• Wire-break	Yes; AI 4 ... 20 mA, AQ, DQ, DI 0 ... 3	Yes; AI 4 ... 20 mA, AQ, DQ, DI 0 ... 3
• Short-circuit to M	Yes; Encoder supply to M, channel by channel	Yes; Encoder supply to M, channel by channel
• Short-circuit to L+	Yes; Analog inputs	Yes; Analog inputs
• Group error	Yes	Yes
• Overflow/underflow	Yes	Yes
• Diagnostics indication LED		
• RUN LED	Yes; green LED	Yes; green LED
• MAINT LED	Yes; Yellow LED	Yes; Yellow LED
• Monitoring of the supply voltage (PWR-LED)	Yes; green PWR LED	Yes; green PWR LED
• for module diagnostics	Yes; green/red DIAG LED	Yes; green/red DIAG LED
Integrated Functions		
Frequency measurement	Yes; Speed measurement	
• Counting functions		
• Continuous counting	Yes	
• Counter response parameterizable	Yes	
• Hardware gate via digital input	Yes	
• Software gate	Yes	

© Siemens AG 2024

Technical specifications (continued)

Article number	6DL1138-6EA00-0EH1	6DL1138-6EC00-0EH1
• Measuring functions		
• Dynamic measurement period adjustment	Yes; Speed measurement	
• Measuring range		
• Frequency measurement, min.	0.1 Hz	
• Frequency measurement, max.	70 kHz; 70 kHz for DI; 7 kHz for DI/DQ; each for P/M encoder and 50 m cable length; 10 kHz for DI; 0.7 kHz for DI/DQ; each for P encoder and 50 m cable length	
Potential separation		
• Potential separation channels		
• between the channels and backplane bus	Yes	Yes
Ambient conditions		
• Ambient temperature during operation		
• horizontal installation, min.	-40 °C	-40 °C
• horizontal installation, max.	70 °C; Observe derating	70 °C; Observe derating
• vertical installation, min.	-40 °C	-40 °C
• vertical installation, max.	60 °C	60 °C
• Altitude during operation relating to sea level		
• Installation altitude above sea level, max.	3 500 m	3 500 m
Dimensions		
Width	22.5 mm	22.5 mm
Height	115 mm	115 mm
Depth	138 mm	138 mm
Weights		
Weight, approx.	200 g	200 g

© Siemens AG 2024

Overview

Fail-safe I/O modules permit safety-oriented monitoring and thus, when required, bringing the plant to the defined safe state. The communication and integration into the process control system is enabled with the proven technology SIMATIC Safety Integrated. The fail-safe I/O modules for DI, DQ and AI correspond to the size of the standard modules and are certified by the German Technical Inspectorate up to SIL 3 per channel. All fail-safe I/O modules can be set up in redundant configuration guaranteeing not only fail-safe operation but also highest availability. SIMATIC ET 200SP HA is perfectly adapted for demanding fail-safe and standard applications in the manufacturing and process industries when high availability and PROFINET R1 redundancy are imperative.

- www.siemens.com/process-safety

Selection and ordering data

F-DI 16×24VDC HA digital input module 16 digital inputs 24 V DC, color code CC01, for terminal block type H1 and M1, channel diagnostics	**6DL1136-6BA00-0PH1**
F-DQ 10×24VDC/2A HA digital output module 10 digital outputs 24 V DC, 2 A, color code CC01, for terminal block type H1 and M1, channel diagnostics	**6DL1136-6DA00-0PH1**
F-AI 8xI 2-/4-wire HART HA analog input module 8 digital inputs, color code CC00, for terminal block type H1 and F1, channel diagnostics	**6DL1136-6AA00-0PH1**

Note:

The use of fail-safe modules requires SIMATIC S7 F systems.

© Siemens AG 2024

Overview

ET200SP_Ex_IO_withPM

The intrinsically safe ET 200SP HA Ex I/O modules extend the SIMATIC ET 200SP HA and SIMATIC ET 200SP distributed I/O systems with the option of integrating devices located in hazardous areas (intrinsically safe sensors, actuators and HART field devices) into the system.

The ET 200SP HA Ex I/O modules with device protection according to intrinsic safety "i" offer channel outputs in Zone 0 or 1. 2-channel HART analog input and output modules and 2/4-channel digital input and output modules with different characteristic curves as well as a power module for intrinsically safe power supply of the modules.

Separate Ex isolators with correspondingly complex wiring and high space requirements are no longer required. The I/O modules can be installed up to ATEX Zone 2 and offer intrinsically safe circuits in Ex ia design for field devices up to Zone 0.

The Ex modules offer channel diagnostics and Configuration in Run and are approved for ambient temperatures from -40 to +70 °C.

Design

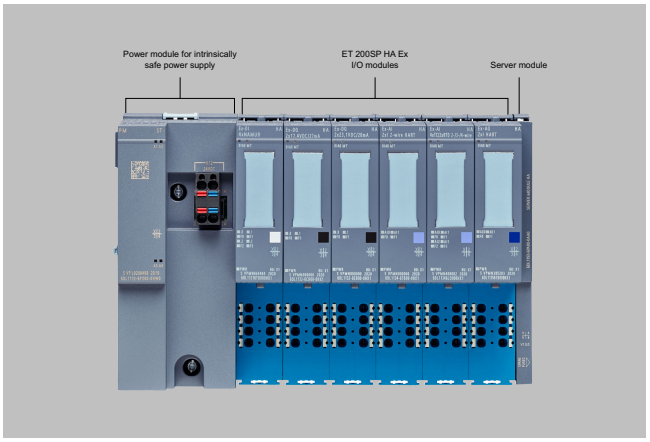

Digital Ex I/O modules	Analog Ex I/O modules
• Digital input module Ex-DI 4xNAMUR 4 NAMUR digital inputs • Digital output module Ex-DQ 2x17.4VDC/27 mA 2 digital outputs DC 17.4 V / 27 mA • Digital output module Ex-DQ 2x23.1VDC/20 mA 2 digital outputs DC 23.1 V / 20 mA	• Analog input module Ex-AI 2xI 2-wire HART 2 analog inputs Measuring range 0 to 20 mA, 4 to 20 mA, 4 to 20 mA with HART • Analog input module Ex-AI 4xTC/2xRTD 2-/3-/4-wire 2/4 analog inputs Measuring ranges: - Voltage - TC (thermocouples) Type B, C, E, J, K, L, N, R, S, T, U, TXK & TXK (L) - RTD (resistance temperature sensors) - Resistor • Analog output module Ex-AQ 2xI HART 2 analog outputs Measuring range 0 to 20 mA, 4 to 20 mA, 4 to 20 mA with HART

© Siemens AG 2024

Design (continued)

Power module Ex-PM-E	Terminal blocks
• Power supply module Ex-PM-E 24 V DC for intrinsically safe supply of the following Ex-ia I/O modules (Power Bus) Horizontal / vertical installation - Up to 60 °C / 50 °C: 0.8 A - Up to 70 °C / 60 °C: 0.6 A	• BaseUnit Type W0 for power module Ex-PM-E • BaseUnit Type X1 for Ex electronics modules

Selection and ordering data

Ex digital modules SIMATIC ET 200SP HA	
Digital Ex-i input module, Ex-DI 4xNAMUR Suitable for BaseUnit Type X1, channel diagnostics	**6DL1131-6TD00-0HX1**
Digital Ex-i output module, Ex-DQ 2x23,1VDC/20 mA Suitable for BaseUnit Type X1, channel diagnostics	**6DL1132-6EB00-0HX1**
Digital Ex-i output module, Ex-DQ 2x17,4VDC/27 mA Suitable for BaseUnit Type X1, channel diagnostics	**6DL1132-6CB00-0HX1**
Ex analog modules SIMATIC ET 200SP HA	
Analog Ex-i HART input module, Ex-AI 2xI 2-wire HART Suitable for BaseUnit Type X1, channel diagnostics, 16 bits, +/-0.3%	**6DL1134-6TB00-0HX1**
Analog Ex-i input module, Ex-AI 4xTC/2xRTD 2-/3-/4-wire Suitable for BaseUnit Type X1, channel diagnostics, 16 bits, +/-0.05%	**6DL1134-6JD00-0HX1**
Analog Ex-i HART output module, Ex-AQ 2xI HART HF Suitable for BaseUnit Type X1, channel diagnostics, 16 bits, +/-0.3%	**6DL1135-6TB00-0HX1**
Power module and BaseUnits	
Power module Ex-PM E 24 V 0.8 A, W x H: 50 mm x 117 mm, suitable for BaseUnit Type W0	**6DL1133-6PX00-0HW0**
BU Type X1 for I/O modules Push-in terminals, W x H: 20 mm x 117 m	**6DL1193-6BP00-0BX1**
BU Type W0 for Ex power module PM-E W x H: 50 mm x 117 mm	**6DL1193-6BP00-0DW0**

© Siemens AG 2024

Technical specifications

Article number	6DL1134-6TB00-0HX1	6DL1134-6JD00-0HX1
General information		
Product type designation	Ex-AI 2xI 2-wire HART	Ex-AI 4xTC/2xRTD 2-/3-/4-wire
• Product function		
• Isochronous mode	No	No
• Engineering with		
• STEP 7 TIA Portal configurable/integrated from version	V16	V16
• PCS 7 configurable/integrated from version	V9.1	V9.1
• PCS neo can be configured/integrated from version	V3.1	V3.1
• PROFINET from GSD version/GSD revision	GSDML V2.35	GSDML V2.35
• Operating mode		
• MSI	Yes	Yes
Analog inputs		
Number of analog inputs	2; Differential inputs	
• For current measurement	2	
• For voltage measurement		4
• For resistance/resistance thermometer measurement		2
• For thermocouple measurement		4
Constant measurement current for resistance-type transmitter, typ.		0.5 mA
Cycle time (all channels), min.	3 ms	
Technical unit for temperature measurement adjustable		Yes; °C/°F/K
• Input ranges (rated values), voltages		
• -1 V to +1 V		Yes; 16 bit incl. sign
• -250 mV to +250 mV		Yes; 16 bit incl. sign
• -50 mV to +50 mV		Yes; 16 bit incl. sign
• -80 mV to +80 mV		Yes; 16 bit incl. sign
• Input ranges (rated values), currents		
• 0 to 20 mA	Yes	
• 4 mA to 20 mA	Yes; 15 bit + sign	
• Input ranges (rated values), thermocouples		
• Type B		Yes; 16 bit incl. sign
• Type C		Yes; 16 bit incl. sign
• Type E		Yes; 16 bit incl. sign
• Type J		Yes; 16 bit incl. sign
• Type K		Yes; 16 bit incl. sign
• Type L		Yes; 16 bit incl. sign
• Type N		Yes; 16 bit incl. sign
• Type R		Yes; 16 bit incl. sign
• Type S		Yes; 16 bit incl. sign
• Type T		Yes; 16 bit incl. sign
• Type U		Yes; 16 bit incl. sign
• Type TXK/TXK(L) to GOST		Yes; 16 bit incl. sign
• Input ranges (rated values), resistance thermometer		
• Cu 10		Yes; 16 bit incl. sign
• Ni 100		Yes; 16 bit incl. sign
• LG-Ni 1000		Yes; 16 bit incl. sign
• Ni 120		Yes; 16 bit incl. sign
• Ni 200		Yes; 16 bit incl. sign

© Siemens AG 2024

Technical specifications (continued)

Article number	6DL1134-6TB00-0HX1	6DL1134-6JD00-0HX1
• Ni 500		Yes; 16 bit incl. sign
• Pt 100		Yes; 16 bit incl. sign
• Pt 1000		Yes; 16 bit incl. sign
• Pt 200		Yes; 16 bit incl. sign
• Pt 500		Yes; 16 bit incl. sign
• Input ranges (rated values), resistors		
• 0 to 150 ohms		Yes; 15 bit
• 0 to 300 ohms		Yes; 15 bit
• 0 to 600 ohms		Yes; 15 bit
• 0 to 3000 ohms		Yes; 15 bit
• 0 to 6000 ohms		Yes; 15 bit
• PTC		Yes; 15 bit
• Thermocouple (TC)		
• Temperature compensation		
• parameterizable		Yes
• Cable length		
• shielded, max.	500 m; Ex characteristic values must be observed	200 m; Ex characteristic values must be observed; line resistance at RTD (simple) max. 25 ohm; loop resistance at TC max. 8 kOhm
• unshielded, max.	300 m; Ex characteristic values must be observed	
Analog value generation for the inputs		
• Integration and conversion time/resolution per channel		
• Resolution with overrange (bit including sign), max.	16 bit	16 bit
• Integration time, parameterizable	Yes; channel by channel	Yes; Channel-by-channel, results from the selected interference frequency suppression
• Interference voltage suppression for interference frequency f1 in Hz	10 / 50 / 60 Hz	16.6 / 50 / 60 Hz, channel-by-channel
• Conversion time (per channel)		180 / 60 / 50 ms, results from the selected interference frequency suppression
• Smoothing of measured values		
• Number of smoothing levels	4; None; 4/8/16 times	
• parameterizable	Yes	Yes; none, weak, medium, strong, channel-by-channel
Encoder		
• Connection of signal encoders		
• for current measurement as 2-wire transducer	Yes	
• Burden of 2-wire transmitter, max.	750 Ω; At 20 mA input current	
Errors/accuracies		
• Basic error limit (operational limit at 25 °C)		
• Voltage, relative to input range, (+/-)		0.05 %
• Current, relative to input range, (+/-)	0.2 %	
• Resistance, relative to input range, (+/-)		0.05 %
• Interference voltage suppression for f = n x (f1 +/- 1 %), f1 = interference frequency		
• Common mode voltage, max.		60 V; Applicable for use in non-hazardous areas; no common mode voltage permissible in hazardous areas
• Common mode interference, min.		90 dB
Protocols		
HART protocol	Yes	
Interrupts/diagnostics/status information		
Diagnostics function	Yes	Yes

© Siemens AG 2024

Technical specifications (continued)

Article number	6DL1134-6TB00-0HX1	6DL1134-6JD00-0HX1
• Alarms		
• Diagnostic alarm	Yes	Yes
• Limit value alarm	Yes	Yes; two upper and two lower limit values in each case
• Diagnoses		
• Monitoring the supply voltage	Yes	Yes
• Wire-break	Yes; channel by channel	Yes; channel by channel
• Short-circuit	Yes; channel by channel	
• Group error	Yes	
• Overflow/underflow	Yes; channel by channel	Yes; channel by channel
• Diagnostics indication LED		
• MAINT LED	Yes; Yellow LED	Yes; Yellow LED
• Monitoring of the supply voltage (PWR-LED)	Yes; green PWR LED	Yes; green PWR LED
• Channel status display	Yes; green LED	Yes; green LED
• for channel diagnostics	Yes; red LED	Yes; red LED
• for module diagnostics	Yes; green/red DIAG LED	Yes; green/red DIAG LED
Ex(i) characteristics		
• maximum values for connecting terminals for gas group IIC		
• Uo (no-load voltage), max.	26 V	5.9 V
• Io (short-circuit current), max.	93 mA	18 mA
• Po (power output), max.	605 mW	27 mW
• Co (permissible external capacity), max.	99 nF	43 µF
• Lo (permissible external inductivity), max.	4 mH	110 mH
• Ui (intrinsically safe input voltage), max.	10 V	
• Um (voltage at non-intrinsically safe connecting terminals), max.	60 V	60 V
Potential separation		
• Potential separation channels		
• between the channels and backplane bus	Yes	Yes
Ambient conditions		
• Ambient temperature during operation		
• horizontal installation, min.	-40 °C	-40 °C
• horizontal installation, max.	70 °C	70 °C
• vertical installation, min.	-40 °C	-40 °C
• vertical installation, max.	60 °C	60 °C
• Altitude during operation relating to sea level		
• Installation altitude above sea level, max.	2 000 m	2 000 m
Dimensions		
Width	20 mm	20 mm
Height	73 mm	73 mm
Depth	58 mm	58 mm
Weights		
Weight, approx.	55 g	55 g

© Siemens AG 2024

Overview

DIN rails

The DIN rail is required for fitting an ET 200SP HA station in the control cabinet. The IM carrier modules for interface modules, the carrier modules for the I/O modules and the server module are attached to the DIN rail.

The DIN rails are available in lengths of 482 mm (for installation in a 19-inch rack) and 1 500 mm (for maximum configuration and vertical installation in a cabinet).

IM single carrier module

IM redundant carrier module

IM carrier modules for interface modules

Two variants of the IM carrier modules for interface modules are available:

- IM single carrier module for 1 interface module, for single connection to PROFINET
- IM redundant carrier module for 2 interface modules, for redundant connection to PROFINET

The IM carrier modules connect the interface module to the backplane bus. They enable data exchange with the I/O modules.

Overview (continued)

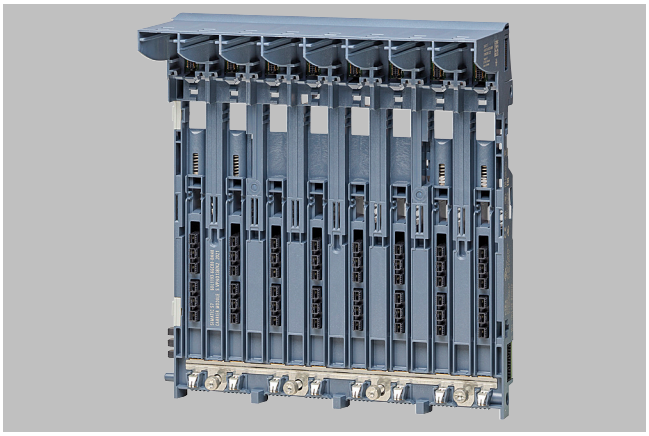

Carrier module for I/O modules, 8-slot

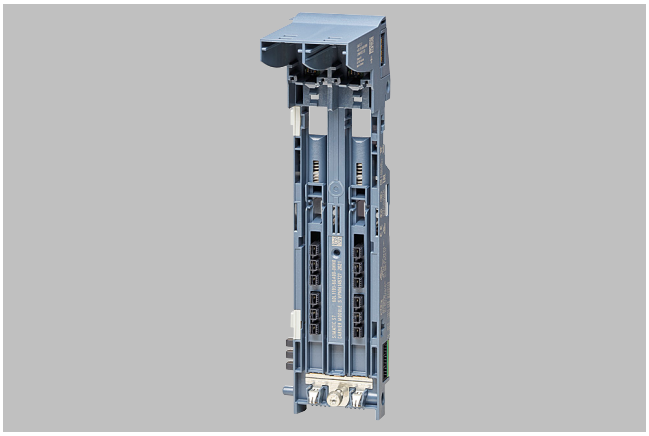

Carrier module for I/O modules, 2-slot

Carrier modules for I/O modules

The slots for the I/O modules are created by the connection of these carrier modules to the terminal blocks.

Carrier modules for I/O modules are available in the following variants:

- Carrier module, 2-slot, with 2 slots for I/O modules
- Carrier module, 8-slot, with 8 slots for I/O modules
- Carrier module, 8-slot, with 8 slots for I/O modules, without power bus function

© Siemens AG 2024

Overview (continued)

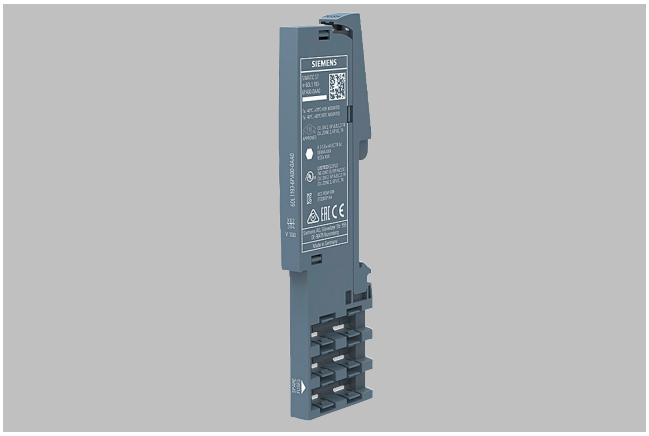

ET 200SP HA, server module

Server module

Server module and power bus cover complete the design of the ET 200SP HA. A server module and a power bus cover are supplied with each IM carrier module for the interface module.

Selection and ordering data

DIN rails for ET 200SP HA	
482 mm (approx. 19 inch) DIN rail Including grounding screw and integrated DIN rail for fitting small components such as clamps, miniature circuit-breakers and relays	**6DL1193-6MC00-0AA0**
1 500 mm (approx. 59 inch) DIN rail Including grounding screw and integrated DIN rail for fitting small components such as clamps, miniature circuit-breakers and relays	**6DL1193-6MD00-0AA0**
Grounding screw For connecting PE to the DIN rail; essential for 1 500 mm DIN rail 20 units per packing unit	**6ES7590-5AA00-0AA0**
IM carrier modules for interface modules Note: A server module and a power bus cover are supplied with each IM carrier module for the interface module.	
IM single carrier module Rack for 1 SIMATIC ET 200SP HA interface module for single connection to PROFINET	**6DL1193-6BH00-0SM0**
IM redundant carrier module Rack for 2 SIMATIC ET 200SP HA interface modules for redundant connection to PROFINET	**6DL1193-6BH00-0RM0**
Carrier modules for I/O modules	
Carrier module, 2-slot Rack for 2 SIMATIC ET 200SP HA I/O modules	**6DL1193-6GA00-0NN0**
Carrier module 8-slot Rack for 8 SIMATIC ET 200SP HA I/O modules	**6DL1193-6GC00-0NN0**
Carrier module 8-slot Carrier without Power Bus, can only be operated with light-gray or black terminal blocks, for holding 8 I/O modules of the SIMATIC ET 200SP HA	**6DL1193-6GC00-8NN0**
Spare parts	
Server module (spare part) for ET 200SP HA	**6DL1193-6PA00-0AA0**

© Siemens AG 2024

Technical specifications

Article number	6DL1193-6GA00-0NN0	6DL1193-6GC00-0NN0	6DL1193-6GC00-8NN0
General information			
Product type designation	Carrier module 2 times	Carrier module 8 times	carrier module 8x without power bus
• Product function			
• I&M data	Yes; Asset data	Yes; Asset data	Yes; Asset data
Hardware configuration			
• Slots			
• Number of slots	2	8	8; for light gray and black terminal blocks
Ambient conditions			
• Ambient temperature during operation			
• horizontal installation, min.	-40 °C	-40 °C	-40 °C
• horizontal installation, max.	70 °C	70 °C	70 °C
• vertical installation, min.	-40 °C	-40 °C	-40 °C
• vertical installation, max.	60 °C	60 °C	60 °C
Dimensions			
Width	52.5 mm; 45 mm when installed	187.5 mm; 180 mm when installed	187.5 mm; 180 mm when installed
Height	203 mm	203 mm	203 mm
Depth	79 mm	79 mm	79 mm
Weights			
Weight, approx.	111 g	450 g	270 g

© Siemens AG 2024

Overview

The slots for the I/O modules are created by connecting carrier modules and terminal blocks. The terminal blocks contain the process terminals for connecting sensors, actuators and other devices.

Select the terminal block for the slot of an I/O module based on the following dependencies:

- Definition of I/O modules associated with a potential group
- Requirement for design with redundant I/O modules (redundant partner in adjacent slot)
- Requirement for design with potential distributors (e.g. when using 32-channel I/O modules)

The following table illustrates the terminal block / I/O module assignment (x = standard):

I/O modules in 24 V range (with push-in terminal blocks)

I/O module	TB type H1	TB type M1 (IO-RED)	TB type F1 (F-AI IO-RED)	TB type P0 (32x L+)	TB type N0 (32x M)
DI 16x24V	x	x			x[c)]
DI 32x24V	x[a)]			x	
DI 16xNAMUR	x	x			x[c)]
DQ 16x24V / 0.5A	x	x			x[c)]
DQ 32x24V / 0.5A	x[b)]				x
DI-AI 16x / DQ 16x HART	x	x			x[c)]
AI 16xI HART	x	x			x[c)]
AI 16xTC 8xRTD	x	x			
AQ 8xI HART	x	x			x[c)]
F-DI 16x24V	x	x			x[c)]
F-DQ 10x24V / 2A	x	x			x[c)]
F-AI 8xI HART	x		x		x[c)]
Power bus infeed	Light gray	Light gray		Light gray	Light gray
Power bus continuer	Dark gray	Dark gray		Dark gray	Dark gray
No power bus			Black		

a) Encoder supply must be realized separately
b) Ground points must be realized separately
c) Offers 32 additional ground points for field connection

I/O modules in 24 V range (with D-sub terminal blocks)

I/O module	TB type H0 (D-sub)	TB type M0 (D-sub, IO-RED)	TB type F0 (D-sub, F-AI, IO-RED)
DI 16x24V	x	x	
DI 32x24V	x[a)]		
DI 16xNAMUR	x	x	
DQ 16x24V / 0.5A	x	x	
DQ 32x24V / 0.5A	x[b)]		
DI-AI 16x / DQ 16x HART	x	x	
AI 16xI HART	x	x	
AI 16xTC 8xRTD	x[c)]	x[c)]	
AQ 8xI HART	x	x	
F-DI 16x24V	x	x	
F-DQ 10x24V / 2A	x	x	
F-AI 8xI HART	x		x

© Siemens AG 2024

Overview (continued)

I/O module	TB type H0 (D-sub)	TB type M0 (D-sub, IO-RED)	TB type F0 (D-sub, F-AI, IO-RED)
Power bus infeed			
Power bus continuer			
No power bus	Black	Black	Black

a)
Encoder supply must be realized separately
b)
Ground points must be realized separately
c)
No temperature compensation for TC

I/O modules with voltages >24 V (with push-in terminal blocks)

I/O modules with channel-selective isolation (with push-in and D-sub terminal blocks)

I/O module	TB type K0 (ISOL)	TB type L0 (ISOL, IO-RED)	TB type S0 (D-sub, ISOL)	TB type R0 (D-sub, ISOL, IO-RED)
DI 8x24 ... 125V DC	x			
DI 8x230VAC	x			
RQ 4x120-230V / 5A CO	x			
AI 4xI HART ISOL	x	x	x	x
AQ 4xI HART ISOL	x	x	x	x
Power bus infeed	Light gray	Light gray		
Power bus continuer	Dark gray			
No power bus			Black	Black

Potential groups/color type of the terminal blocks

To help you distinguish between potential groups on an ET 200SP HA station, the terminal blocks come in different colors:

- Light gray terminal blocks are for feeding in and start a new potential group.
- Dark gray terminal blocks forms a contact with the supply voltage of the terminal block to its left, thus extending the potential group.
- Black terminal blocks do not support any potential groups and must be fed in manually. Dark gray terminal blocks must not be inserted to the right of them.

Note the maximum permissible load current depending on the number of I/O modules:

Number of terminal blocks	Permissible load current in amperes
4	10 A
5	8 A
6	7 A
7	6 A
8	5 A
10	4 A
15	3 A
20	2 A

© Siemens AG 2024

Selection and ordering data

Terminal blocks 24 V DC (push-in)

Terminal block type H1 light gray For starting a new potential group, with 32 push-in terminals, width 22.5 mm, with temperature compensation	**6DL1193-6TP00-0DH1**
Terminal block type H1 dark gray For forwarding a potential group, with 32 push-in terminals, width 22.5 mm, with temperature compensation	**6DL1193-6TP00-0BH1**
Terminal block type M1 light gray For starting a new potential group, with 32 push-in terminals, width 45 mm, for redundant configurations, with temperature compensation	**6DL1193-6TP00-0DM1**
Terminal block type M1 dark gray For forwarding a potential group, with 32 push-in terminals, width 45 mm, for redundant configurations, with temperature compensation	**6DL1193-6TP00-0BM1**
Terminal block, type F1, F-AI, IO-RED 32 push-in terminals, width 45 mm, for redundant configuration with fail-safe analog module F-AI, no power bus	**6DL1193-6TP00-0DF1**
Terminal block type P0 light gray For starting a new potential group, with 32 push-in terminals, additional 32 push-in terminals with encoder supply, width 45 mm, specifically for use with DI 32x24 V DC (6DL1131-6BL00-0PH1)	**6DL1193-6TP00-0DP0**
Terminal block type P0 dark gray For forwarding a potential group, with 32 push-in terminals, additional 32 push-in terminals with encoder supply, width 45 mm, specifically for use with DI 32x24 V DC (6DL1131-6BL00-0PH1)	**6DL1193-6TP00-0BP0**
Terminal block type N0 light gray For starting a new potential group, with 32 push-in terminals, additional 32 push-in terminals for ground connection, width 45 mm, for use with DQ 32x 24 V DC (6DL1132-6BL00-0PH1) and other modules	**6DL1193-6TP00-0DN0**
Terminal block type N0 dark gray For forwarding a new potential group, with 32 push-in terminals, additional 32 push-in terminals for ground connection, width 45 mm, for use with DQ 32x 24 V DC (6DL1132-6BL00-0PH1) and other modules	**6DL1193-6TP00-0BN0**

Terminal blocks 24 V DC (D-sub)

Terminal block, type H0, D-sub D-sub plug 37-pin, 24 V infeed per TB, width 22.5 mm, no power bus	**6DL1193-6TC00-0DH0**
Terminal block, type M0, D-sub, IO-RED D-sub plug 37-pin, 2 slots for I/O redundancy, 24 V infeed per slot, width 45 mm	**6DL1193-6TC00-0DM0**
Terminal block, type F0, D-sub, F-AI, IO-RED D-sub plug 37-pin, for fail-safe analog input, 2 slots for I/O redundancy, 24 V infeed per slot, width 45 mm	**6DL1193-6TC00-0DF0**

Selection and ordering data (continued)

Terminal block, type S0, D-sub, ISOL D-sub plug 37-pin, 24 V infeed per TB, width 22.5 mm	**6DL1193-6TC00-0DS0**
Terminal block, type R0, D-sub, ISOL, IO-RED D-sub plug 37-pin, 2 slots for I/O redundancy, 24 V infeed per slot, width 45 mm	**6DL1193-6TC00-0DR0**

Terminal blocks insulated (24 V DC / 125 V DC / 230 V AC)

Terminal block type K0 light gray For starting a new potential group, with 16 push-in terminals, width 22.5 mm	**6DL1193-6TP00-0DK0**
Terminal block type K0 dark gray For forwarding a potential group, with 16 push-in terminals, width 22.5 mm	**6DL1193-6TP00-0BK0**
Terminal block type L0 light gray For starting a new potential group, with 16 push-in terminals, width 45 mm	**6DL1193-6TP00-0DL0**

Accessories

Shield connection for terminal block 5 shield supports including support foot and shield terminals each for plugging onto BaseUnits with automatic low-impedance connection to functional grounding	**6ES7193-6SC20-1AM0**

© Siemens AG 2024

Technical specifications

Article number	6DL1193-6TC00-0D-H0	6DL1193-6TC00-0D-M0	6DL1193-6TC00-0D-F0	6DL1193-6TC00-0D-S0	6DL1193-6TC00-0D-R0
General information					
Product type designation	type H0, SUB-D	type M0, D-SUB, IO-RED		type S0, D-SUB, ISOL	type R0, D-SUB, ISOL, IO-RED
• Product function					
• I&M data	Yes; Asset data	Yes; Asset data	Yes; Asset data	Yes; Asset data	Yes; Asset data
Hardware configuration					
• Slots					
• Number of slots	1	2; For IO redundancy	2; For IO redundancy	1	2; For IO redundancy
Ambient conditions					
• Ambient temperature during operation					
• horizontal installation, min.	-40 °C	-40 °C	-40 °C	-40 °C	-40 °C
• horizontal installation, max.	70 °C	70 °C	70 °C	70 °C	70 °C
• vertical installation, min.	-40 °C	-40 °C	-40 °C	-40 °C	-40 °C
• vertical installation, max.	60 °C	60 °C	60 °C	60 °C	60 °C
Dimensions					
Width	22.5 mm	45 mm	45 mm	22.5 mm	45 mm
Height	175 mm	175 mm	175 mm	175 mm	175 mm
Depth	77 mm	77 mm	77 mm	77 mm	77 mm
Weights					
Weight, approx.	92 g	158 g	156 g	92 g	158 g

© Siemens AG 2024

Overview

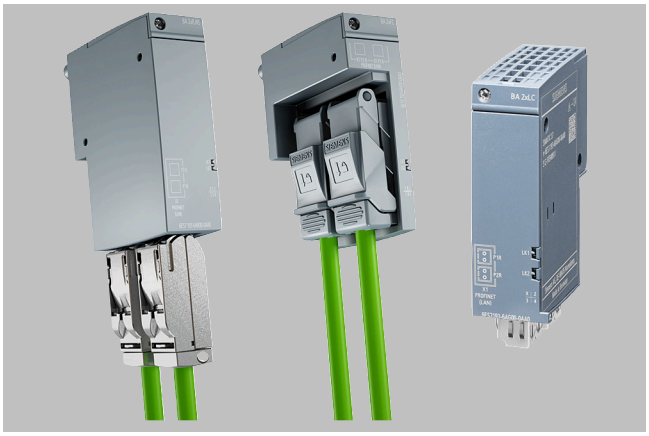

BA 2×RJ45, 2×FC and 2×LC BusAdapters

BusAdapters

A BusAdapter as a separate component allows a free choice of connection technology:

- BA 2×RJ45: 2 electrical connections for bus cable with standard RJ45 connector
- BA 2×FC: 2 electrical connections for direct connection of FastConnect bus cable
- BA 2×LC: 2 optical ports for fiber-optic cables
- BA LC/RJ45: 1 optical connection and 1 electrical connection for bus cable with standard RJ45 connector
- BA LC/FC: 1 optical connection and 1 electrical connection for direct connection of FastConnect bus cable
- BA 2×RJ45 (VD): 2 electrical connections for using PROFINET via existing PROFIBUS cables

Selection and ordering data

BusAdapters	
2×RJ45 BusAdapter 2 × RJ45 sockets for PROFINET (standard Ethernet socket)	**6DL1193-6AR00-0AA0**
2×FC BusAdapter 2 × FastConnect (FC) connections for PROFINET	**6DL1193-6AF00-0AA0**
2×LC BusAdapter 2 × glass fiber-optic connections for PROFINET	**6DL1193-6AG00-0AA0**
BA LC/RJ45 BusAdapter 2 × glass fiber-optic connections	**6DL1193-6AG20-0AA0**
BA LC/FC BusAdapter 2 × glass fiber-optic connections	**6DL1193-6AG40-0AA0**
BA 2×RJ45 (VD) BusAdapter 2 × electrical connections for Ethernet communication via 2, 4 or 8-wire copper cables and distances up to 500 m	**6GK5991-2VA00-8AA2**
BA 2xLC-LD BusAdapter 2 × LC-LD port, for single-mode glass fiber-optic, up to max. 20 km	**6ES7193-6AG50-0AA0**
BA LC-LD/RJ45 BusAdapter 1 × LC-LD port, for single-mode fiber-optic, up to max. 20 km, 1 × RJ45 port	**6ES7193-6AG60-0AA0**

© Siemens AG 2024

Technical specifications

Article number	6DL1193-6AR00-0AA0	6DL1193-6AF00-0AA0	6DL1193-6AG00-0AA0
General information			
Product type designation	BA 2x RJ45	BA 2xFC	BA 2xLC
Interfaces			
Number of PROFINET interfaces	1; 2 ports (switch) RJ45	1; 2 ports (switch) FC	1; 2 ports (switch) LC Multimode Glass Fibre
• Supports protocol for PROFINET IO			
• Number of RJ45 ports	2		
• Number of FC (FastConnect) connections		2	
• Number of LC ports			2
• Cable length			
• Cu conductors	100 m	100 m	
• Multimode graded-index fiber 50/125 µm			3 km; min. transmit power -23.5 dB, min. receiver sensitivity -31 dB
• Multimode graded-index fiber 62.5/125 µm			3 km; min. transmit power -20 dB, min. receiver sensitivity -31 dB
Ambient conditions			
• Ambient temperature during operation			
• min.	-40 °C	-40 °C	-40 °C
• max.	70 °C	70 °C	65 °C; redundant design (2x 6DL1155-6AU00-0PM0): max. 60 °C horizontal, max. 50 °C vertical. When using different I/O devices, the derating specified there must be observed
Dimensions			
Width	20 mm	20 mm	20 mm
Height	69.5 mm	69.5 mm	75 mm; Without protective caps (approx. 8 mm)
Depth	59 mm	59 mm	59 mm
Weights			
Weight, approx.	46 g	53 g	60 g

Article number	6DL1193-6AG20-0AA0	6DL1193-6AG40-0AA0
General information		
Product type designation	BA LC/RJ45	BA LC/FC
Interfaces		
Number of PROFINET interfaces	1; 2 ports (switch) LC / RJ45	1; 2 ports (switch) LC / FC
• Supports protocol for PROFINET IO		
• Number of RJ45 ports	1	
• Number of FC (FastConnect) connections		1
• Number of LC ports	1; Wavelength of 1 270 ... 1 380 nm, corresponds to 100BASE-FX	1; Wavelength of 1 270 ... 1 380 nm, corresponds to 100BASE-FX
• Cable length		
• Cu conductors	100 m	100 m
• Multimode graded-index fiber 50/125 µm	3 km; min. transmit power -23.5 dB, min. receiver sensitivity -31 dB	3 km; min. transmit power -23.5 dB, min. receiver sensitivity -31 dB
• Multimode graded-index fiber 62.5/125 µm	3 km; min. transmit power -20 dB, min. receiver sensitivity -31 dB	3 km; min. transmit power -20 dB, min. receiver sensitivity -31 dB
Standards, approvals, certificates		
RoHS conformity	Yes	Yes
China RoHS compliance	Yes	Yes
Ambient conditions		

© Siemens AG 2024

Technical specifications (continued)

Article number	6DL1193-6AG20-0AA0	6DL1193-6AG40-0AA0
• Ambient temperature during operation		
• min.	-40 °C	-40 °C
• max.	70 °C; = Tmax for horizontal installation; for vertical installation Tmax = 60 °C; redundant setup (2x 6DL1155-6AU00-0PM0): max. 65 °C horizontally, max. 60 °C vertically. When using different IO Devices, the derating specified there must be observed.	65 °C; = Tmax for horizontal installation; for vertical installation Tmax = 60 °C; redundant setup (2x 6DL1155-6AU00-0PM0): max. 60 °C horizontally, max. 55 °C vertically. When using different IO Devices, the derating specified there must be observed.
Dimensions		
Width	20 mm	20 mm
Height	75 mm; Without protective caps (approx. 8 mm)	75 mm; Without protective caps (approx. 8 mm)
Depth	59 mm	59 mm
Weights		
Weight, approx.	32 g	50 g

© Siemens AG 2024

Overview

Extending the SIMATIC ET 200SP HA system with specific additional I/O modules from the SIMATIC ET 200SP system gives you more options and flexibility.

When these I/O modules are used, the following aspects need to be considered:

- Special slot rules apply (see System Manual for the SIMATIC ET 200SP HA)
- Module redundancy is not supported for the additional I/O modules
- Attention must be paid to the specific properties of the additional I/O modules, such as ambient temperature, painting, insulation protection. These are usually limited compared to the ET 200SP HA I/O modules
- Before use, check whether (Library) Support is already available for the desired purpose

Note:

Product partners are external companies outside Siemens AG and its associated companies. Information and descriptions of products made by product partners are non-binding, and are the responsibility of the product partners. These products are manufactured independently and under the responsibility of the respective product partner, and are sold and supplied by it under its terms of business and delivery.

Unless compulsory by law, Siemens assumes no liability or warranty for these products or for connection with these products of the product partners.

Selection and ordering data

CM PtP communications module	
For serial communication connections with RS232, RS422, RS485 interfaces, BU type A0, color code CC00	
• CM PtP communications module (V2)	6ES7137-6AA01-0BA0
Analog input module	
• AI Energy Meter CT HF, for 1 A or 5 A current transformers, with network analysis functions, channel diagnostics; BU type U0	6ES7134-6PA01-0CU0
• AI Energy Meter RC HF, for Rogowski coils or 333 mV current/voltage transformers, with network analysis functions, channel diagnostics; BU type U0	6ES7134-6PA21-0CU0
TM SIWAREX WP321 weighing module	7MH4138-6AA00-0BA0
Single-channel, for platform scales or hopper scales with analog load cells (1 - 4 mV/V), 1 × LC, 1 × RS 485.	
TM SIWAREX WP351 HF weighing module	
SIMATIC ET 200SP, TM SIWAREX WP351 HF, legal-for-trade weighing module for automatic dosing, filling and checking scales and totalizing weighing instruments	7MH4138-6BA00-0CU0
Motor starters	
Direct starter	
• Adjustment range 0.1 ... 0.4 A	3RK1308-0AA00-0CP0
• Adjustment range 0.3 ... 1 A	3RK1308-0AB00-0CP0
• Adjustment range 0.9 ... 3 A	3RK1308-0AC00-0CP0
• Adjustment range 2.8 ... 9 A	3RK1308-0AD00-0CP0
• Adjustment range 4 ... 12 A	3RK1308-0AE00-0CP0
Reversing starter	
• Adjustment range 0.1 ... 0.4 A	3RK1308-0BA00-0CP0
• Adjustment range 0.3 ... 1 A	3RK1308-0BB00-0CP0
• Adjustment range 0.9 ... 3 A	3RK1308-0BC00-0CP0
• Adjustment range 2.8 ... 9 A	3RK1308-0BD00-0CP0
• Adjustment range 4 ... 12 A	3RK1308-0BE00-0CP0
SITRANS FCT070	
Transmitter for ET 200SP	7ME4138-6AA00-0BB1
AirLINE SP valve terminal type 8647 for integration into ET 200SP HA	
For more detailed information about the AirLINE SP, type 8647 (e.g. data sheet, operating manual) please contact Bürkert directly: https://www.burkert-usa.com/en/type/8647	

**** Disclaimer of liability***

This information and the descriptions have been compiled with great care. However, it is not possible for Siemens to verify that the data supplied by product partners is complete, correct and up-to-date. The possibility that individual items of information might be incorrect, incomplete, or not up-to-date cannot therefore be ruled out. Unless compulsory by law, Siemens accepts no liability for the usability of the data or of the products for the user per se.

© Siemens AG 2024

Overview

ET 200SP HA with Bürkert valve terminal AirLINE SP

- For pneumatic control of actuators with ET 200SP HA
- Can be used together with system and IO components of the ET 200SP HA distributed I/O system
- Product of the product partners Bürkert Fluid Control Systems, and can only be obtained from Bürkert Fluid Control Systems

Note:

Product partners are external companies outside Siemens AG and its associated companies. Information and descriptions of products made by product partners are non-binding, and are the responsibility of the product partners. These products are manufactured independently and under the responsibility of the respective product partner, and are sold and supplied by it under its terms of business and delivery.

Unless compulsory by law, Siemens assumes no liability or warranty for these products or for connection with these products of the product partners. Refer also to the note on disclaimer of liability/use of hyperlinks*).

Benefits

- High degree of process safety by using non-return valves and pneumatic infeed modules with pressure monitoring
- System-wide detailed diagnostics in plain text, and also locally on an LC display
- Quick and easy valve change during operation (hot swapping)
- Reduced number of components in the control cabinet (enabling compact control cabinet)
- Quick installation & configuration of the pneumatic connections

Application

Valve terminals are widely used in industrial automation, and serve as pilot valves for controlling actuators in the food, pharmaceutical and water treatment industries. In combination with the AirLINE SP, type 8647 from the Bürkert Co., SIMATIC ET 200SP HA forms a universal interface between process and plant control, and enables the flexible, modular structure of pilot valves and I/O modules. The new diagnostic functions such as open circuit and short circuit detection provide transparent system status and thereby increase system availability.

More information

For more detailed information about the AirLINE SP, type 8647 (e.g. data sheet, operating manual) please contact Bürkert directly:
https://www.burkert.co.uk/en/type/8647

) Disclaimer of liability
This information and the descriptions have been compiled with great care. However, it is not possible for Siemens to verify that the data supplied by product partners is complete, correct and up-to-date. The possibility that individual items of information might be incorrect, incomplete, or not up-to-date cannot therefore be ruled out. Unless compulsory by law, Siemens accepts no liability for the usability of the data or of the products for the user per se.

© Siemens AG 2024

Overview

The ET 200iSP is a modular, intrinsically safe I/O system with IP30 degree of protection which can be operated in gas and dust atmospheres at ambient temperatures from -20 to +70 °C. It is optimized for use with SIMATIC PCS 7 and PCS neo, but can also be integrated in other systems such as SIMATIC S5 by means of GSD/GSDML file.

In accordance with ATEX directive 2014/34/EU, the ET 200iSP remote I/O stations can be installed directly in the hazardous zones 1 and 2 as well as in non-hazardous areas. The intrinsically safe sensors, actuators and HART field devices can also be located in zone 0 or 20 if necessary.

The modular design of the ET 200iSP makes it possible to optimally adapt the remote I/O stations to the respective automation task through individual configuration and flexible expansion. To increase plant availability, the pressure-encapsulated power supply and the intrinsically safe PROFINET or PROFIBUS DP connection of the stations can also be of redundant design. The intrinsically safe, optical PROFINET connection allows redundancy functions S2 and R1 as well as the setup of fail-safe MRP rings.

The modern architecture with hardwiring and automatic slot coding supports pre-wiring without the electronic modules, simple and reliable hot swapping of individual modules without a fire certificate as well as configuration in run (CiR).

In addition to analog and digital I/O modules for the automation of technological functions of the process (Basic Process Control), the range of electronic modules also includes fail-safe I/O modules for implementing safety applications. The various types of electronic module can be arranged mixed within a station. Comprehensive diagnostic options facilitate commissioning and troubleshooting.

Design

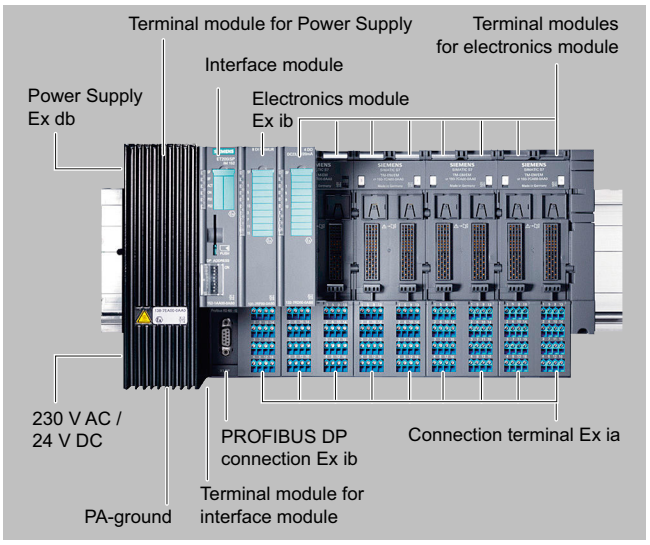

Main components of the ET 200iSP distributed I/O system:

- Terminal modules
  mounted on an S7-300 DIN rail; for connecting power supply, interface, electronics, watchdog and reserve modules and for prewiring
  - with blue screw-type or spring-loaded terminals for hazardous environments
  - with black screw-type terminals for non-hazardous environments
- Power supply unit
  - 1 or 2 (redundant) pressure-encapsulated power supply modules PS for feeding in 24 V DC or 120/230 V AC
- Interface modules
  - 1 or 2 (redundant) IM 152 interface modules for connecting the station to PROFINET
  - 1 or 2 (redundant) IM 152 interface modules for connecting the station to the PROFIBUS DP
- Electronic modules (2/4/8 channels): Up to 32 in any combination
  - Digital electronic modules (DI, DQ)
  - Analog electronic modules (AI, AO)
  - Safety-related electronic modules (F-DI, F-DO and F-AI)
  - Watchdog module
- Accessories
  - Reserve module for reserving a slot for any electronic module
  - Termination module (included in scope of delivery of terminal modules for the PROFIBUS interface)
  - Labeling sheets with printable labeling strips
  - Inscription labels for slot numbering

Assembly

Assembly is quick and easy:

- Latching of terminal modules onto the S7-300 DIN rail
- Prewiring of process signal cables on the terminal modules using spring-loaded or screw-type connections

© Siemens AG 2024

Design (continued)

- Power supply, interface and electronic modules can be plugged in without the need for additional tools

Expansion limits

The station width is 107 cm in the maximum configuration with 32 electronic modules.

The maximum number of electronic modules which can be used per station may be limited depending on the current consumption of the modules required to solve the automation task. However, up to 16 electronic modules can be used without limitation.

Stainless steel wall box

If the ET 200iSP is used in a hazardous area, it must be installed in an appropriate Ex housing which at least corresponds to the IP54 degree of protection. Appropriate versions of an IP65 housing are offered in the Section "Stainless steel wall box".

Outstanding design features

- Installation and testing of the wiring is possible in advance without the electronic module (permanent wiring).
- Isolation of the mechanical and electronic systems, in conjunction with the independent process wiring, permits fast and easy replacement of the electronic modules
- Mechanical coding which is carried out when an electronic module is plugged onto a terminal module for the first time prevents the connection of incorrect replacement modules
- Hot swapping of the power supply modules and electronic modules is possible without a fire certificate.

Integration

Distributed ET 200iSP remote I/O stations are connected to the automation systems (controllers) either via PROFINET by means of a suitable switch (e.g. SCALANCE X 212-2) with optically limited interface (Laser Class 1) or, alternatively, via PROFIBUS DP, which can be routed intrinsically safe into hazardous zone 1 using an isolating transformer (RS 485-iS coupler) as barrier. Transfer rates of up to 100 Mbps with PROFINET or 1.5 Mbps with PROFIBUS DP are possible here.

The ET 200iSP remote I/O stations are integrated into the SIMATIC PCS 7 process control system using standard driver blocks.

The existing standard diagnostics drivers process the diagnostic messages generated by internal or external faults (e.g. wire break or short-circuit) as well as status messages of the connected HART field devices for the host Operator System and the SIMATIC PCS 7 Maintenance Station.

Vendor-specific information and maintenance data are saved, protected against power failure, on the electronic modules.

Configuration

The ET 200iSP stations can be configured and parameterized per HW Config in a SIMATIC S7/SIMATIC PCS 7 environment. Parameters of the ET 200iSP stations and the HART field devices can also be set using the process device manager, SIMATIC PDM. Routing via PROFIBUS DP enables direct access to the HART field devices on the ET 200iSP with SIMATIC PDM.

The system function CiR (Configuration in Run) is also supported for the configuration of SIMATIC PCS 7 and permits the following changes to be made to the configuration during runtime:

- Adding of ET 200iSP stations
- Adding modules to the ET 200iSP station
- Re-configuration of modules
- Parameterization of connected HART field devices with SIMATIC PDM

Minimum software requirements (with PROFIBUS DP interface module)

- SIMATIC PCS 7 environment: SIMATIC PCS 7 Version 6.1
- SIMATIC S7 environment: SIMATIC STEP 7 Version 5.3+SP1 including Hardware Support Package (HSP) or SIMATIC STEP 7 (TIA Portal)
- The latest SIMATIC PDM version is used to configure the HART field devices.

Minimum software requirements (with PROFINET interface module)

- SIMATIC PCS 7 environment: SIMATIC PCS 7 Version 9.1 SP2 Update Collection 1
- SIMATIC S7 environment: SIMATIC STEP 7 Version 5.7 including Hardware Support Package (HSP) or SIMATIC STEP 7 (TIA Portal V18)

Configuration with third-party systems and old SIMATIC PCS 7/STEP 7 versions

The station design (configuration) should be published over the PROFIBUS DP network per GSD file.

Process Device Manager SIMATIC PDM is required for the configuration. It can be used to define, for example, alarm limits for analog modules, signal encoders for digital modules as well as settings for outputting analog values and HART commands for analog HART modules.

© Siemens AG 2024

Technical specifications

ET 200iSP – general		
Degree of protection	IP30	
Ambient temperature		
• Horizontal mounting position	-20 ... +70 °C	
• Other mounting positions	-20 ... +50 °C	
Exposure to environmental substances	According to ISA-S71.04 severity level G1; G2; G3 (except for NH3, only level G2 in this case)	
EMC	Electromagnetic compatibility according to NE21	
Vibration resistance	0.5 g continuously, 1 g periodically	
Approvals, standards		
• ATEX	II 2 G (1) GD I M2	Ex db eb [ia/ib] IIC T4 Ex db eb [ia/ib] I
• IECEx	Zone 1	Ex db eb [ia/ib] IIC T4
• INMETRO	Zone 1	BR-Ex db eb [ia/ib] IIC T4
• cFMus		NI Division 2, Groups A, B, C, D T4
	Class I, II, III	AIS Division 1, Groups A, B, C, D, E, F, G
	Class I	Zone 1, AEx de [ia/ib] IIC T4
• cULus		Division 2, Groups A, B, C, D T4
	Class I, II, III	providing int. safe circuits for Division 1, Groups A, B, C, D, E, F, G
	Class I	Zone 1, AEx de [ia/ib] IIC T4
• CCC Ex	Ex de ib[ia] IIC T4 Ex de [ia/ib] IIC T4	
• PROFIBUS	EN 50170, Volume 2	
• PROFINET	IEC 61158 and IEC 61784	
• IEC	IEC 61131, Part 2	
• CE	In accordance with ATEX directive 2014/34/EU, EMC Directive 2014/30/EU and LVD-guideline 2014/35/EU	
• UKCA	According to Regulations UKSI 2016:1107	
• KCC	Korea Certification	
• Marine approval	Classification companies • ABS (American Bureau of Shipping) • BV (Bureau Veritas) • DNV (Det Norske Veritas) • GL (Germanischer Lloyd) • LRS (Lloyds Register of Shipping) • Class NK (Nippon Kaiji Kyokai)	

© Siemens AG 2024

Overview

An ET 200iSP power supply unit consists of a TM-PS terminal module (A or B) and a PS power supply module which is plugged onto this. Terminal modules and power supply modules can be ordered separately.

The power supply modules are suitable for both individual operation (standard) and redundant operation. Depending on the operating mode, they must be combined with the terminal modules as follows:

- Standard: 1 × PS on TM-PS-A UC
- Redundancy: 1 × PS on TM-PS-A UC (left) plus 1 × PS on TM-PS-B UC (right)

Power supply modules are available for supplies of 24 V DC and 120/230 V AC.

The operating state of the power supply modules is indicated by two LEDs on the IM 152 interface module (one for each module).

Application

Functions of the power supply modules

- Supply of ET 200iSP with safely isolated operating voltages for
  - Powerbus (for supplying the electronics modules)
  - Backplane bus (logic)
  - Interface module (IM 152-1)
- Safety-related limiting of output voltages

Design

Depending on the operating mode (standard or redundant), one or two power supply modules are plugged onto the corresponding terminal modules. In standard mode, a PS power supply module is combined with a TM-PS-A terminal module. In redundant mode, a second power supply unit is provided on the right of the first one. This consists of a PS power supply module and a TM-PS-B terminal module.

The power supply modules can also be used in hazardous areas. The explosion protection is guaranteed by an explosion-proof metal enclosure (explosion protection Ex db).

The power source (24 V DC or 120/230 V AC) must be installed in the safe area. It is connected to the terminal module of the power supply unit via Ex e terminals. The power source may only be connected or disconnected in a safe operating environment and not in hazardous areas.

The power supply module is moved into its working position by means of a slide system, and manually fixed there by means of a mechanical lock. Replacement through disconnection of the existing power supply module and insertion of a new module is also permissible in the hazardous area. To replace the module, the mechanical lock must first be released to remove the power supply module from its working position using the slide.

Selection and ordering data

PS 24 V DC power supply module for ET 200iSP	**6ES7138-7EA01-0AA0**
PS 120/230 V AC power supply module for ET 200iSP	**6ES7138-7EC00-0AA0**
TM-PS-A UC terminal module For standard operation	**6ES7193-7DA20-0AA0**
TM-PS-B UC terminal module Additional terminal module for redundant operation	**6ES7193-7DB20-0AA0**

© Siemens AG 2024

Technical specifications

Article number	6ES7138-7EA01-0AA0	6ES7138-7EC00-0AA0
Supply voltage		
Rated value (DC)	24 V	
Rated value (AC)		230 V; 120/230 V AC
Reverse polarity protection	Yes	
• Line frequency		
• permissible range, lower limit		47 Hz
• permissible range, upper limit		63 Hz
Input current		
from supply voltage L+, max.	4 A	
from supply voltage L1, max.		1.04 A; at rated voltage 230 VAC:0.45A at rated voltage 120 VAC:0.75A
Interrupts/diagnostics/status information		
Status indicator	Yes	Yes
Alarms	No	No
• Diagnoses		
• Diagnostic information readable	Yes; via IM 152	Yes; via IM 152
• Diagnostics indication LED		
• Group error SF (red)	No	No
Potential separation		
primary/secondary	Yes	Yes
between supply voltage and electronics	Yes	No
Standards, approvals, certificates		
CE mark	CE 0344	CE 0344
UKCA mark	DEKRA 21UKEX0027 Importer UK: Siemens plc Manchester M20 2UR	
BIS	Yes	Yes
• Use in hazardous areas		
• ATEX marking	II 2 G Ex db eb [ib] IIC T4 Gb I M2 Ex db eb [ib] I Mb	
Dimensions		
Width	60 mm	60 mm
Height	190 mm	190 mm
Depth	136.5 mm	136.5 mm
Weights		
Weight, approx.	2 700 g	2 700 g

© Siemens AG 2024

Overview

The IM 152 interface module realizes the connection of the ET 200iSP to a PROFINET network with an intrinsically safe multimode glass fiber-optic cable up to 100 Mbps or to PROFIBUS DP with intrinsically safe RS 485-iS transmission technology for transfer rates of up to 1.5 Mbps. A redundant connection is also possible. In this case, the ET 200iSP is connected via two interface modules to two redundant segments of a high-availability automation system (PROFINET R1 redundancy or PROFIBUS redundancy). Alternatively, the S2 redundancy function and the setup of fail-safe MRP rings is possible with PROFINET.

The IM 152 is plugged onto a special terminal module (to be ordered separately). The following terminal modules are available:

- TM-IM/IM terminal module for two interface modules (for device redundancy)
- TM-IM/EM60 terminal module for one interface module and one watchdog, reserve or electronic module (except 2 DQ relay)
  - with blue screw-type or spring-loaded terminals for hazardous environments
  - with black screw-type terminals for non-hazardous environments

Tasks of the IM 152-1PN interface module

- Connection of ET 200iSP to the intrinsically safe, optical PROFINET network
- Autonomous communication with the host automation system
- Preparation of data for the fitted electronic modules

Overview (continued)

- Backup of electronic module parameters
- Time stamping of digital process signals with an accuracy of 20 ms

Tasks of the IM 152-1DP interface module

- Connection of ET 200iSP to the intrinsically safe PROFIBUS DP
- Autonomous communication with the host automation system
- Preparation of data for the fitted electronic modules
- Backup of electronic module parameters
- Time stamping of digital process signals with an accuracy of 20 ms

The maximum address space of the interface module is 244 bytes for inputs, and 244 bytes for outputs.

Design

The terminal module of the IM 152-1PN (TM-IM/EM or TM-IM/IM) is connected directly next to the power supply unit on the DIN rail. The PROFINET connection of the IM 152-1PN is made via the SFP multimode transceivers with LC plug on the underside of the module. These must be inserted into the intended SFP sockets of the module during commissioning.

The IM 152 and the transceivers may be removed and inserted under hazardous conditions.

Firmware updates can be performed over the PROFINET connection using SIMATIC STEP 7.

LEDs on the front of the IM 152 signal the operating state, group faults, bus faults, the link of the two optical transceivers and the operating state of the fitted power supply modules.

The terminal module of the IM 152 (TM-IM/EM or TM-IM/IM) is connected directly next to the power supply unit on the DIN rail. The PROFIBUS DP connection of the IM 152 is made using the standard Sub-D socket on the terminal module. The matching connecting element we provide is a special connection plug with selectable terminating resistance. The terminating resistance must be activated on the last ET 200iSP station of each PROFIBUS DP line.

Hot swapping of the IM 152 and the PROFIBUS connection plug is permissible under hazardous conditions.

A termination module is provided together with the IM 152, and must be fitted at the right end of each ET 200iSP station following the last electronic module.

The IM 152 has a slot for micro memory cards (MMC). The firmware can therefore be updated either via the PROFIBUS DP or using MMCs.

The PROFIBUS addresses can be set using DIP switches at the front which are protected by a cover.

LEDs on the front of the IM 152 signal the supply voltage, group faults, bus faults, the active IM with redundant operation, and the operating state of the fitted power supply modules.

© Siemens AG 2024

Selection and ordering data

ET 200iSP IM 152-1DP interface module	**6ES7152-1AA00-0AB0**
ET 200iSP IM 152-1PN interface module	**6ES7152-1BA00-0AB0**
ET 200iSP TM-IM/EM60 terminal module For an IM 152 and a watchdog, reserve or electronic module (except 2 DQ relay), including termination module	
• For hazardous environments	
- TM-IM/EM60S (blue screw-type terminals)	**6ES7193-7AA00-0AA0**
- TM-IM/EM60C (blue spring-loaded terminals)	**6ES7193-7AA10-0AA0**
• For non-hazardous environments	
- TM-IM/EM60S (black screw-type terminals)	**6ES7193-7AA20-0AA0**
ET 200iSP TM-IM/IM terminal module For two IM 152 modules (redundant operation), including termination module	**6ES7193-7AB00-0AA0**
Accessories	
SFP transceiver Ex Spare part for IM 152-1PN, multimode glass fiber-optic cable, LC, 50/125 µm and 62.5/125 µm	**A5E51793919**
PROFIBUS connection plug with selectable terminating resistor For connection of IM 152-1DP to PROFIBUS DP with RS 485-iS transmission technology	**6ES7972-0DA60-0XA0**
RS 485-iS coupler Isolating transformer for coupling PROFIBUS DP segments with RS 485 and RS 485-iS transmission technology	**6ES7972-0AC80-0XA0**
Labeling sheet DIN A4, perforated, each consisting of 10 sheets of 30 strips each for electronic modules and 20 strips each for IM 152	
• Petrol	**6ES7193-7BH00-0AA0**
• Yellow	**6ES7193-7BB00-0AA0**
S7-300 DIN rails	
• 585 mm long, suitable for assembly of ET 200iSP in a 650 mm wide wall box	**6ES7390-1AF85-0AA0**
• 885 mm long, suitable for assembly of ET 200iSP in a 950 mm wide wall box	**6ES7390-1AJ85-0AA0**

© Siemens AG 2024

Technical specifications

Article number	6ES7193-7AA00-0AA0	6ES7193-7AA10-0AA0	6ES7193-7AA20-0AA0	6ES7193-7AB00-0AA0
Standards, approvals, certificates				
CE mark	Yes	Yes	Yes	CE 0344
• Use in hazardous areas				
• ATEX marking	see ET 200iSP system	see ET 200iSP system		
Dimensions				
Width	60 mm	60 mm	60 mm	60 mm
Height	190 mm	190 mm	190 mm	190 mm
Depth	52 mm	52 mm	52 mm	52 mm
Weights				
Weight, approx.	235 g	235 g	235 g	195 g

© Siemens AG 2024

Overview

Digital input modules

- 8-channel digital input module DI NAMUR EEx i, for evaluation of NAMUR sensors, connected and non-connected contacts, as well as for use as counter or frequency meter

  Parameterizable connections:

  - NAMUR sensor on/off
  - NAMUR changeover contact
  - Single contact connected (mechanical NO contact)
  - Changeover contact connected (mechanical changeover contact)
  - Single contact non-connected (mechanical NO contact with single contact)
  - Changeover contact non-connected (mechanical changeover contact)
  - Counting function: optional use of 2 channels for recording counter pulses or for frequency measurement
  - Short-circuit and wire-break monitoring

Digital output modules

- 4-channel digital output modules DQ EEx i, 23.1 V DC/20 mA, 17.4 V DC/27 mA, 17.4 V DC/40 mA or 25.5 V DC/22 mA, with external actuator switch-off via High or Low signal (H/L switch-off)
  - Load-free switching of outputs via external intrinsically safe signal
  - Power boosting through parallel connection of two outputs for one actuator with 4 DQ 17.4 V DC/27 mA or 4 DQ 17.4 V DC/40 mA
  - Short-circuit and wire-break monitoring
- 2-channel digital output module DQ Relay EEx e, e.g. for switching solenoid valves, DC contactors or signaling lamps
  - Can be plugged onto TM-RM/RM terminal module
  - Output current up to 2 A with 60 V UC for each of the two relay outputs
  - Installation up to Ex zone 1
  - Intrinsically safe and non-intrinsically safe signals can be mixed in a station

Overview (continued)

Extra functions

Actuator shutdown function of the 4 DQ EEx i modules

The 4 DQ EEx i modules are equipped with a shutdown function. This permits implementation of an external actuator switch-off independent of the automation system (controller).

As soon as the intrinsically safe switch-off signal (High or Low) is present at the actuator switch-off input of the electronic module, its outputs are deactivated.

You can also combine several DQ modules into a switch-off group. The intrinsically safe power supply for the switch-off device is either via the watchdog module or a separate intrinsically safe source.

Design

- The digital electronics modules are installed on terminal modules which must be ordered separately.
  - TM-IM/EM60 terminal modules for one interface module and one watchdog, reserve or electronics module (for versions, see section Interface module)
  - TM-EM/EM60 terminal modules with two slots for watchdog module, reserve module or electronics module (except 2 DO relay), with blue screw-type or spring-loaded terminals for hazardous environments or with black screw-type terminals for non-hazardous environments
  - TM-RM/RM 60 terminal modules with two slots for relay or reserve modules
- The digital electronics module 2 DO Relays must be plugged onto the terminal module TM-RM/RM 60S (screw-type connection system). All other digital electronics modules are plugged as planned onto terminal modules using screw-type systems (TM-EM/EM60S) or spring-loaded systems (TM-EM/EM60C).
- Using a spare module plugged onto a terminal module TM-EM/EM60S, TM-EM/EM60C or TM-RM/RM 60S, you can reserve a slot for a digital electronics module or close a gap resulting from the design. The spare module can be simply replaced by the envisaged electronics module at a later point in time.
- The mechanical coding of the terminal module which is carried out when an electronics module is plugged on for the first time prevents the connection of incorrect replacement modules.
- Hot swapping of individual modules is possible under hazardous conditions.
- The process signals are connected to the terminals of the terminal modules assigned according to the plan, using either conventional screw-type or spring-loaded systems (conductor cross-sections 0.14 mm² to max. 2.5 mm²) depending on the type of module.

© Siemens AG 2024

Selection and ordering data

Digital input modules	
Digital input modules EEx i	
8 DI NAMUR For evaluation of NAMUR sensors, connected/non-connected contacts, as well as for recording count pulses or measuring frequencies • 8 × NAMUR (NAMUR sensor on/off, NAMUR changeover contact) or connected/non-connected inputs (single/changeover contact) • 2 channels optionally usable as counters (max. 5 kHz) or frequency meters (1 Hz ... 5 kHz) • Time stamping 20 ms, rising or falling edge • Wire-break monitoring • Short-circuit monitoring • Sensor power supply monitoring • Flutter monitoring	6ES7131-7RF00-0AB0
Digital output modules	
Digital output modules EEx i with H-switch-off (external actuator disconnection via H-signal); for switching of solenoid valves, DC relays, indicator lights, actuators	
4 DQ DC 23.1 V/20 mA • 4 channels with 20 mA each • Short-circuit monitoring • Wire-break monitoring • Configurable connection of substitute value in the event of CPU failure • Load-free switching of outputs via external intrinsically safe signal	6ES7132-7RD01-0AB0
4 DQ DC 17.4 V/27 mA • 4 channels with 27 mA each or • 2 outputs connected in parallel with 54 mA each • Short-circuit monitoring • Wire-break monitoring • Configurable connection of substitute value in the event of CPU failure • Load-free switching of outputs via external intrinsically safe signal	6ES7132-7RD11-0AB0
4 DQ DC 17.4 V/40 mA • 4 channels with 40 mA each or • 2 outputs connected in parallel with 80 mA each • Short-circuit monitoring • Wire-break monitoring • Configurable connection of substitute value in the event of CPU failure • Load-free switching of outputs via external intrinsically safe signal ***Digital output modules EEx i with L-switch-off*** (external actuator disconnection via L-signal); for switching of solenoid valves, DC relays, indicator lights, actuators	6ES7132-7RD22-0AB0

Selection and ordering data (continued)

4 DQ DC 23.1 V/20 mA • 4 channels with 20 mA each • Short-circuit monitoring • Wire-break monitoring • Configurable connection of substitute value in the event of CPU failure • Load-free switching of outputs via external intrinsically safe signal	6ES7132-7GD00-0AB0
4 DQ DC 17.4 V/27 mA • 4 channels with 27 mA each or • 2 outputs connected in parallel with 54 mA each • Short-circuit monitoring • Wire-break monitoring • Configurable connection of substitute value in the event of CPU failure • Load-free switching of outputs via external intrinsically safe signal	6ES7132-7GD10-0AB0
4 DQ DC 17.4 V/40 mA • 4 channels with 40 mA each or • 2 outputs connected in parallel with 80 mA each • Short-circuit monitoring • Wire-break monitoring • Configurable connection of substitute value in the event of CPU failure • Load-free switching of outputs via external intrinsically safe signal	6ES7132-7GD21-0AB0
4 DQ DC 25.5 V/22 mA[1)] • 4 channels with 22 mA each • Short-circuit monitoring • Wire-break monitoring • Configurable connection of substitute value in the event of CPU failure • Load-free switching of outputs via external intrinsically safe signal ***Digital output modules EEx e*** For switching of solenoid valves, DC contactors or indicator lights	6ES7132-7GD30-0AB0
2 DQ relay, 60 V AC/DC, 2 A • Can be plugged onto TM-RM/RM terminal module • Output current up to 2 A with 60 V AC/DC for each of the two relay outputs • Installation up to hazardous zone 1 • Configurable connection of substitute value in the event of CPU failure	6ES7132-7HB00-0AB0
Terminal modules	
ET 200iSP TM-EM/EM60 terminal module For two modules (reserve module, watchdog module and all electronic modules except 2 DQ relays can be plugged in) • For hazardous environments - TM-EM/EM60S (blue screw-type terminals) - TM-EM/EM60C (blue spring-loaded terminals) • For non-hazardous environments	 6ES7193-7CA00-0AA0 6ES7193-7CA10-0AA0

© Siemens AG 2024

Selection and ordering data (continued)

- TM-EM/EM60S (black screw-type terminals)	6ES7193-7CA20-0AA0
ET 200iSP TM-RM/RM 60 terminal module For two modules (electronic module 2 DQ Relay and reserve module can be plugged in)	
• TM-RM/RM60S (screw-type terminals)	6ES7193-7CB00-0AA0
Accessories	
Reserve module For any electronic module	6ES7138-7AA00-0AA0
Labeling sheet DIN A4, perforated, each consisting of 10 sheets of 30 strips each for electronic modules and 20 strips each for IM 151	
• Petrol	6ES7193-7BH00-0AA0
• Yellow	6ES7193-7BB00-0AA0
S7-300 mounting rails	
• 585 mm long, suitable for assembly of ET 200iSP in a 650 mm wide wall box	6ES7390-1AF85-0AA0
• 885 mm long, suitable for assembly of ET 200iSP in a 950 mm wide wall box	6ES7390-1AJ85-0AA0

[1]) Can be used with SIMATIC PCS 7 V7.1+SP2 or higher

© Siemens AG 2024

Technical specifications

Article number	6ES7132-7RD01-0AB0	6ES7132-7RD11-0AB0	6ES7132-7RD22-0AB0
General information			
Product type designation	4DQ 23.1 V DC/20 mA	4DQ 17.4 V DC/27 mA	4DQ 17.4 V DC/40 mA
Digital outputs			
Type of digital output	Transistor	Transistor	Transistor
Number of digital outputs	4; additionally 1 intrinsically-safe input for H shutdown	4; additionally 1 intrinsically-safe input for H shutdown	4; additionally 1 intrinsically-safe input for H shutdown
Short-circuit protection	Yes	Yes	Yes
No-load voltage Uao (DC)	23.1 V	17.4 V	17.4 V
Internal resistor Ri	275 Ω	150 Ω	167 Ω
• Trend key points E			
• Voltage Ue (DC)	17.6 V	13.3 V	10.7 V
• Current Ie	20 mA	27 mA	40 mA; 80 mA when outputs connected in parallel
• Output current			
• for signal "1" rated value	0.02 A	0.027 A	0.04 A
• Output delay with resistive load			
• "0" to "1", max.	2 ms	2 ms	2 ms
• "1" to "0", max.	1.5 ms	1.5 ms	1.5 ms
• Parallel switching of two outputs			
• for uprating	No; for Ex reasons not possible; nor for predecessor	Yes	Yes
• Switching frequency			
• with resistive load, max.	100 Hz	100 Hz	100 Hz
• with inductive load, max.	2 Hz	2 Hz	2 Hz
Interrupts/diagnostics/status information			
Diagnostics function	Yes	Yes	
• Alarms			
• Diagnostic alarm	Yes; Parameterizable	Yes; Parameterizable	Yes; Parameterizable
• Diagnoses			
• Diagnostic information readable	Yes	Yes	Yes
• Wire-break	Yes; R > 10 kohms, I < 100 µA	Yes	Yes; R > 10 kohms, I < 100 µA
• Short-circuit	Yes; R< 800 ohms (one output), R< 40 ohms (outputs connected in parallel)	Yes	Yes; R< 80 Ohm (one output), R< 40 Ohm (outputs connected in parallel)
• Diagnostics indication LED			
• Group error SF (red)	Yes	Yes	Yes
• Status indicator digital output (green)	Yes	Yes	Yes; Per channel
Ex(i) characteristics			
• maximum values for connecting terminals for gas group IIC			
• Uo (no-load voltage), max.	25.6 V	19.4 V	19.4 V
• Io (short-circuit current), max.	96 mA	132 mA	118 mA
• Po (power output), max.	0.61 W	0.64 W	0.57 W
• Co (permissible external capacity), max.	98 nF	0.23 µF	0.24 µF
• Lo (permissible external inductivity), max.	3 mH	1.9 mH	2.5 mH
• Ui (intrinsically safe input voltage), max.	28 V	28 V	28 V
Potential separation			
• Potential separation digital outputs			
• between the channels and backplane bus	Yes	Yes	Yes
Standards, approvals, certificates			
CE mark	CE 0344	CE 0344	CE 0344
UKCA mark	DEKRA 21UKEX0085 Importer UK: Siemens plc Manchester M20 2UR	DEKRA 21UKEX0085 Importer UK: Siemens plc Manchester M20 2UR	DEKRA 21UKEX0085 Importer UK: Siemens plc Manchester M20 2UR

© Siemens AG 2024

Technical specifications (continued)

Article number	6ES7132-7RD01-0AB0	6ES7132-7RD11-0AB0	6ES7132-7RD22-0AB0
• Highest safety class achievable in safety mode			
• SIL acc. to IEC 61508	No		No
• Use in hazardous areas			
• ATEX marking	II 2 G (1) G Ex ib [ia Ga] IIC T4 Gb II 2 G (1) D Ex ib [ia IIIC Da] IIC T4 Gb I M2 Ex ib [ia] I Mb	II 2 G (1) G Ex ib [ia Ga] IIC T4 Gb II 2 G (1) D Ex ib [ia IIIC Da] IIC T4 Gb I M2 Ex ib [ia] I Mb	II 2 G (1) G Ex ib [ia Ga] IIC T4 Gb II 2 G (1) D Ex ib [ia IIIC Da] IIC T4 Gb I M2 Ex ib [ia] I Mb
Dimensions			
Width	30 mm	30 mm	30 mm
Height	129 mm	129 mm	129 mm
Depth	136.5 mm	136.5 mm	136.5 mm
Weights			
Weight, approx.	255 g	255 g	255 g

© Siemens AG 2024

Overview

Analog input modules

- 4-channel analog input module AI 2 WIRE HART EEx i for current measurement in the range 4 to 20 mA, suitable for connection of 2-wire transmitters (with/without HART functionality)
  - Resolution 12 bit + sign
  - Max. load of transmitter 750 Ω
  - Short-circuit and wire break monitoring
- 4-channel analog input module AI 4 WIRE HART EEx i for current measurement in the range 0/4 to 20 mA, suitable for connection of 4-wire transmitters (with/without HART functionality)
  - Resolution 12 bit + sign
  - Max. load of transmitter 750 Ω
  - Wire break monitoring
- 4-channel analog input module AI RTD EEx i for resistance testing and for temperature measurement by Pt100/Ni100 resistance thermometer
  - Resolution 15 bit + sign
  - 2, 3, or 4-wire connection possible
  - Resistance measurements 600 Ω absolute and 1 000 Ω absolute
  - Wire break monitoring
- 4-channel analog input module AI TC EEx i for thermoelectric EMF measurements and for temperature measurement by thermocouple, type B, E, N, J, K, L, S, R, T, U
  - Resolution 15 bit + sign
  - Internal temperature compensation possible using TC sensor module (included in scope of delivery of module)
  - External temperature compensation by means of a temperature value acquired at an analog module of the same ET 200iSP station
  - Wire break monitoring

Overview (continued)

Analog output modules

- 4-channel analog output module AO I HART EEx i for output of current signals in the range 0/4 to 20 mA to field devices (with/without HART functionality)
  - Resolution 14 bit
  - Parameterizable substitute value in case of CPU failure
  - Short-circuit and wire break monitoring

Extra functions

Temperature compensation

A TC sensor module for internal temperature compensation is provided with the 4 AI TC module, and is fitted on the corresponding terminals of the associated terminal module.

External temperature compensation is possible via a Pt100 on a 4 AI RTD module.

Design

- The analog electronics modules are installed on terminal modules which must be ordered separately:
  - TM-IM/EM60 terminal modules for one interface module and one watchdog, reserve or electronics module (for versions, see section Interface module)
  - TM-EM/EM60 terminal modules with two slots for watchdog module, reserve module or electronics module (except 2 DO relay), with blue screw-type or spring-loaded terminals for hazardous environments or with black screw-type terminals for non-hazardous environments
- The analog electronics modules are plugged as planned onto terminal modules using screw-type systems (TM-EM/EM60S) or spring-loaded systems (TM-EM/EM60C).
- Using a spare module plugged onto a terminal module TM-EM/EM60S or TM-EM/EM60C, you can reserve a slot for an analog electronics module or close a gap resulting from how the modules were placed. The spare module can be simply replaced by the envisaged electronics module at a later point in time.
- The mechanical coding of the terminal module which is carried out when an electronics module is plugged on for the first time prevents the connection of incorrect replacement modules.
- Hot swapping of individual modules is possible under hazardous conditions.
- The process signals are connected to the terminals of the terminal modules assigned according to the plan, using either conventional screw-type or spring-loaded systems (conductor cross-sections 0.14 mm² to max. 2.5 mm²) depending on the type of module.

© Siemens AG 2024

Selection and ordering data

Analog input modules	
EEx i analog input modules	
4 AI I 2 WIRE HART For measuring currents with 2-wire transmitters with/without HART functionality • 4 × 4 ... 20 mA, HART, 2-wire transmitter • Transmitter load: max. 750 Ω • Resolution 12 bit + sign • Short-circuit monitoring • Wire-break monitoring	6ES7134-7TD00-0AB0
4 AI I 4 WIRE HART For measuring currents with 4-wire transmitters with/without HART functionality • 4 × 0/4 ... 20 mA, HART, 4-wire transmitter • Transmitter load: max. 750 Ω • Resolution 12 bit + sign • Wire-break monitoring	6ES7134-7TD50-0AB0
4 AI RTD For measuring resistances as well as for temperature measurements with resistance thermometers • 4 × RTD, resistance thermometer Pt100/Ni100 • 2, 3, 4-wire • Resolution 15 bit + sign • Short-circuit monitoring • Wire-break monitoring	6ES7134-7SD51-0AB0
4 AI TC For thermoelectric EMF measurements as well as for temperature measurements with thermocouples • 4 × TC (thermocouples) • Type B [PtRh-PtRh] • Type N [NiCrSi-NiSi] • Type E [NiCr-CuNi] • Type R [PtRh-Pt] • Type S [PtPh-Pt] • Type J [Fe-CuNi] • Type L [Fe-CuNi] • Type T [Cu-CuNi] • Type K [NiCr-Ni] • Type U [Cu-CuNi] • Resolution 15 bit + sign • Internal compensation of reference junction temperature possible using TC sensor module (included in scope of supply of module) • External temperature compensation via Pt100, connected to RTD module of same ET 200iSP station • Wire-break monitoring	6ES7134-7SD00-0AB0
Analog output modules	
Analog output modules EEx i	

Selection and ordering data (continued)

4 AO I HART For output of currents to field devices with/without HART functionality • 4 × 0/4 ... 20 mA, HART (max. load 750 Ω) • Resolution 14-bit • Short-circuit monitoring • Wire-break monitoring • Parameterizable substitute value in case of CPU failure	6ES7135-7TD00-0AB0
Terminal modules	
ET 200iSP TM-EM/EM60 terminal module For two modules (reserve module, watchdog module and all electronic modules except 2 DQ relays can be plugged in)	
• For hazardous environments	
- TM-EM/EM60S (blue screw-type terminals)	6ES7193-7CA00-0AA0
- TM-EM/EM60C (blue spring-loaded terminals)	6ES7193-7CA10-0AA0
• For non-hazardous environments	
- TM-EM/EM60S (black screw-type terminals)	6ES7193-7CA20-0AA0
Accessories	
Reserve module For any electronic module	6ES7138-7AA00-0AA0
Labeling sheet DIN A4, perforated, each consisting of 10 sheets of 30 strips each for electronic modules and 20 strips each for IM 151	
• Petrol	6ES7193-7BH00-0AA0
• Yellow	6ES7193-7BB00-0AA0
S7-300 DIN rails	
• 585 mm long, suitable for assembly of ET 200iSP in a 650 mm wide wall box	6ES7390-1AF85-0AA0
• 885 mm long, suitable for assembly of ET 200iSP in a 950 mm wide wall box	6ES7390-1AJ85-0AA0

© Siemens AG 2024

Technical specifications

Article number	6ES7135-7TD00-0AB0
General information	
Product type designation	4AQ I HART
Analog outputs	
Number of analog outputs	4
Cycle time (all channels) max.	3.6 ms
• Output ranges, current	
• 0 to 20 mA	Yes
• 4 mA to 20 mA	Yes
• Connection of actuators	
• for current output two-wire connection	Yes
• Load impedance (in rated range of output)	
• with current outputs, max.	750 Ω
• Cable length	
• shielded, max.	500 m
Analog value generation for the outputs	
• Integration and conversion time/resolution per channel	
• Resolution with overrange (bit including sign), max.	14 bit
• Settling time	
• for resistive load	4 ms
• for capacitive load	40 ms
• for inductive load	40 ms
Errors/accuracies	
• Basic error limit (operational limit at 25 °C)	
• Current, relative to output range, (+/-)	0.1 %
Interrupts/diagnostics/status information	
Substitute values connectable	Yes
• Alarms	
• Diagnostic alarm	Yes
• Diagnoses	
• Diagnostic information readable	Yes
• Wire-break	Yes
• Short-circuit	Yes
• Diagnostics indication LED	
• Group error SF (red)	Yes
Potential separation	
• Potential separation analog outputs	
• between the channels and backplane bus	Yes
Standards, approvals, certificates	
CE mark	Yes
Dimensions	
Width	30 mm
Height	129 mm
Depth	136.5 mm
Weights	
Weight, approx.	265 g

© Siemens AG 2024

Overview

The electronic modules of the SIMATIC ET 200iSP distributed I/O system equipped with safety functions can be used together with the safety-related automation systems (controllers) for the implementation of safety applications. The input modules record the process signals, evaluate them, and prepare them for additional processing by the automation system. The output modules convert the safety-related signals output by the automation systems so that they are suitable for controlling the connected actuators.

F-digital input modules

- 8 F-DI Ex NAMUR

  Safety-related digital input module for evaluating the signals from IEC 60947-5-6/NAMUR sensors and connected/non-connected mechanical contacts in hazardous and non-hazardous areas
  - SIL3/Cat.3/PLe with 8 inputs (1-channel/1oo1 evaluation) or 4 inputs (2-channel/1oo2 evaluation)
  - 8 short-circuit-proof sensor supplies (8 V DC) for 1 channel each
  - Inputs and sensor supplies electrically isolated from power bus and backplane bus
  - Diagnostics evaluation (deactivated for non-connected mechanical contacts)
  - Internal diagnostics buffer
  - Programmable diagnostics interrupt
  - Supports time stamping
  - Channel-selective passivation
  - Firmware update using HW Config possible
  - Exclusively for safety mode
  - LED displays for safety mode, group errors and channel status/fault

F-digital output modules

- 4 F-DO Ex DC 17.4 V/40 mA

  Safety-related digital output module for controlling actuators in hazardous and non-hazardous areas, e.g. solenoid valves, DC current relays or indicator lights
  - SIL3/Cat.3/PLe with 4 outputs, switching to P/P potential
  - Electrical isolation from power bus and backplane bus
  - Rated load voltage 17.4 V DC
  - Max. output current 40 mA

Overview (continued)

  - Performance enhancement through parallel connection of two digital outputs for one actuator
  - Short-circuit, overload and wire-break monitoring
  - Configurable diagnostics
  - Internal diagnostics buffer
  - Programmable diagnostics interrupt
  - Channel-selective passivation
  - Firmware update using HW Config possible
  - Exclusively for safety mode
  - LED displays for safety mode, group errors and channel status/fault

F-analog input modules

- 4 F-AI Ex HART (0 ... 20 mA or 4 ... 20 mA)

  Safety-related digital input module for evaluating the signals from current simulators in hazardous and non-hazardous areas, e.g. 2-wire transmitters and HART field devices
  - SIL3/Cat.3/PLe with 4 inputs of one module (1-channel/1oo1 evaluation) or 4 inputs of two modules (2-channel/1oo2 evaluation)
  - Measuring ranges: 0 ... 20 mA or 4 ... 20 mA
  - Resolution 15 bit + sign
  - HART communication in measuring range 4 ... 20 mA
  - 4 short-circuit-proof sensor supplies (min. 12 V DC; max. 26 V DC) for 1 channel each
  - Inputs and sensor supplies electrically isolated from backplane bus
  - Configurable diagnostics
  - Programmable diagnostics interrupt
  - Internal diagnostics buffer
  - Firmware update using HW Config possible
  - Exclusively for safety mode
  - LED displays for safety mode, group errors, channel faults and HART status per channel

© Siemens AG 2024

Design

- The safety-related electronic modules are mounted on terminal modules that are ordered separately:
  - TM-IM/EM60 terminal modules for one interface module and one watchdog, reserve or electronic module (for versions, see section "Interface module")
  - TM-EM/EM60 terminal modules with two slots for watchdog module, reserve module or electronic module (except 2 DO relay), with blue screw-type or spring-loaded terminals for hazardous environments or with black screw-type terminals for non-hazardous environments
- The safety-related electronic modules are plugged as planned onto terminal modules using screw-type systems (TM-EM/EM60S) or spring-loaded systems (TM-EM/EM60C).
- Using a reserve module plugged onto a terminal module TM-EM/EM60S or TM-EM/EM60C, you can reserve a slot for a safety-related electronic module or close a gap resulting from the design. The reserve module can be simply replaced by the envisaged electronic module at a later point in time.
- The mechanical coding of the terminal module which is carried out when an electronic module is plugged in for the first time prevents the connection of incorrect replacement modules.
- Hot swapping of individual modules is possible under hazardous conditions.
- The process signals are connected to the terminals of the terminal modules assigned according to the plan, using either conventional screw-type or spring-loaded systems (conductor cross-sections 0.14 mm² to max. 2.5 mm²) depending on the type of module.

Selection and ordering data

Safety-related electronic modules	
F-digital input modules	
8 F-DI Ex NAMUR For evaluating the signals from IEC 60947-5-6/NAMUR sensors and connected/non-connected mechanical contacts in hazardous and non-hazardous areas • SIL3/Cat.3/PLe with 8 inputs (1-channel/1oo1 evaluation) or 4 inputs (2-channel/1oo2 evaluation)	6ES7138-7FN00-0AB0
F-digital output modules	
4 F-DO Ex 17.4 V DC/40 mA For controlling actuators in hazardous and non-hazardous areas, e.g. solenoid valves, DC current relays or indicator lights • SIL3/Cat.3/PLe with 4 outputs, switching to P/P potential	6ES7138-7FD00-0AB0
F-analog input modules	
4 F-AI Ex HART (0 ... 20 mA or 4 ... 20 mA) For evaluating the signals from current simulators in hazardous and non-hazardous areas, e.g. 2-wire transmitters and HART field devices • SIL3/Cat.3/PLe with 4 inputs of one module (1-channel/1oo1 evaluation) or 4 inputs of two modules (2-channel/1oo2 evaluation) • Resolution 15 bit + sign • HART communication in measuring range 4 ... 20 mA	6ES7138-7FA00-0AB0
Terminal modules	
ET 200iSP TM-EM/EM60 terminal module For two modules (reserve module, watchdog module and all electronic modules except 2 DQ relays can be plugged in)	
• For hazardous environments	
- TM-EM/EM60S (blue screw-type terminals)	6ES7193-7CA00-0AA0
- TM-EM/EM60C (blue spring-loaded terminals)	6ES7193-7CA10-0AA0
• For non-hazardous environments	
- TM-EM/EM60S (black screw-type terminals)	6ES7193-7CA20-0AA0
Accessories	
Reserve module For any electronic module	6ES7138-7AA00-0AA0
Labeling sheet DIN A4, perforated, each consisting of 10 sheets of 30 strips each for electronic modules and 20 strips each for IM 151	
• Petrol	6ES7193-7BH00-0AA0
• Yellow	6ES7193-7BB00-0AA0

© Siemens AG 2024

Selection and ordering data (continued)

S7-300 DIN rails	
• 585 mm long, suitable for assembly of ET 200iSP in a 650 mm wide wall box	**6ES7390-1AF85-0AA0**
• 885 mm long, suitable for assembly of ET 200iSP in a 950 mm wide wall box	**6ES7390-1AJ85-0AA0**

Technical specifications

Article number	6ES7138-7FN00-0AB0
General information	
Product type designation	8F-DI ExNAMUR
Encoder supply	
Number of outputs	8
Digital inputs	
Number of digital inputs	8
• Input current	
• for signal "0", max. (permissible quiescent current)	1.2 mA
• for signal "1", min.	2.1 mA
• for signal "1", typ.	9.5 mA
Encoder	
Number of connectable encoders, max.	8
• Connectable encoders	
• NAMUR encoder	Yes
Interrupts/diagnostics/status information	
Diagnostics function	Yes
• Alarms	
• Diagnostic alarm	Yes; Parameterizable
• Hardware interrupt	No
• Diagnoses	
• Diagnostic information readable	Yes
• Wire-break	Yes; NAMUR encoders or single contact with 10 kOhm parallel resistor
• Short-circuit	Yes; R load < 150 ohms with NAMUR sensor/sensor and NAMUR changeover contact/sensor to DIN 19234
• Diagnostics indication LED	
• Group error SF (red)	Yes
Potential separation	
• Potential separation digital inputs	
• between the channels and backplane bus	Yes
Standards, approvals, certificates	
CE mark	Yes
• Highest safety class achievable in safety mode	
• Performance level according to ISO 13849-1	PLe
• SIL acc. to IEC 61508	SIL 3
• Use in hazardous areas	
• ATEX marking	II 2 G (1) GD Ex ib[ia Ga][ia IIIC Da] IIC T4 GB and I M2 Ex ib[ia Ma] I Mb
Dimensions	
Width	30 mm
Height	129 mm
Depth	136.5 mm

© Siemens AG 2024

Technical specifications (continued)

Article number	6ES7138-7FN00-0AB0
Weights	
Weight, approx.	288 g

Article number	6ES7138-7FD00-0AB0
General information	
Product type designation	4F-DQ Ex(i) 17.4 V DC/40 mA
Digital outputs	
Type of digital output	Transistor
Number of digital outputs	4
Short-circuit protection	Yes
Controlling a digital input	No
No-load voltage Uao (DC)	17.4 V
Internal resistor Ri	167 Ω
• Load resistance range	
• lower limit	270 Ω
• upper limit	18 kΩ
• Trend key points E	
• Voltage Ue (DC)	10.7 V
• Current Ie	40 mA
• Output voltage	
• for signal "1", max.	17.4 V
• Output current	
• for signal "0" residual current, max.	10 µA
• Parallel switching of two outputs	
• for uprating	Yes
• for redundant control of a load	No
• Switching frequency	
• with resistive load, max.	30 Hz
• with inductive load, max.	2 Hz
Interrupts/diagnostics/status information	
Substitute values connectable	Yes
• Alarms	
• Diagnostic alarm	Yes; Parameterizable
• Diagnoses	
• Diagnostic information readable	Yes
• Wire-break	Yes
• Short-circuit	Yes
• Diagnostics indication LED	
• Group error SF (red)	Yes
• Status indicator digital output (green)	Yes
Potential separation	
• Potential separation digital outputs	
• between the channels and backplane bus	Yes
Standards, approvals, certificates	
CE mark	Yes
• Highest safety class achievable in safety mode	
• Performance level according to ISO 13849-1	PLe
• SIL acc. to IEC 61508	SIL 3
Dimensions	
Width	30 mm
Height	129 mm

© Siemens AG 2024

Technical specifications (continued)

Article number	6ES7138-7FD00-0AB0
Depth	136.5 mm
Weights	
Weight, approx.	285 g

© Siemens AG 2024

Overview

The watchdog module has two fundamental functions:

- Monitoring of the ET 200iSP remote I/O station for hardware failures (hardware lifebeat); external, applicative failure monitoring is also possible via an I/O address area of the module
- Intrinsically-safe power supply for external actuator switch-off

The watchdog module must be plugged onto a terminal module (order separately). The following terminal modules are suitable for this:

- TM-IM/EM60 terminal modules for one interface module and one watchdog, reserve or electronics module (for versions, see Interface module section)
- TM-EM/EM60 terminal modules with two slots for watchdog module, reserve module or electronics modules (except 2 DO relay):
  - with blue screw-type or spring-loaded terminals for hazardous environments
  - with black screw-type terminals for non-hazardous environments

The first slot directly next to the interface module is provided for the watchdog module.

Selection and ordering data

Watchdog module	
Watchdog module For failure monitoring and for the intrinsically safe power supply of an external actuator disconnection	**6ES7138-7BB00-0AB0**
Terminal modules	
ET 200iSP TM-EM/EM60 terminal module For two modules (reserve module, watchdog module and all electronic modules except 2 DQ relays can be plugged in)	
• For hazardous environments	
- TM-EM/EM60S (blue screw-type terminals)	**6ES7193-7CA00-0AA0**
- TM-EM/EM60C (blue spring-loaded terminals)	**6ES7193-7CA10-0AA0**
• For non-hazardous environments	
- TM-EM/EM60S (black screw-type terminals)	**6ES7193-7CA20-0AA0**
Accessories	
Labeling sheet DIN A4, perforated, each consisting of 10 sheets of 30 strips each for electronic modules and 20 strips each for IM 151	
• Petrol	**6ES7193-7BH00-0AA0**
• Yellow	**6ES7193-7BB00-0AA0**

© Siemens AG 2024

Technical specifications

Article number	6ES7138-7BB00-0AB0
General information	
Product type designation	Watchdog module
Digital inputs	
Number of digital inputs	0
Ex(i) characteristics	
• maximum values for connecting terminals for gas group IIC	
• Uo (no-load voltage), max.	12.7 V
• Io (short-circuit current), max.	329 mA
• Po (power output), max.	0.91 W
• Co (permissible external capacity), max.	1 µF
• Lo (permissible external inductivity), max.	0.3 mH
Standards, approvals, certificates	
CE mark	CE 0344
• Use in hazardous areas	
• ATEX marking	II 2 G Ex ib IIC T4 Gb I M2 Ex ib I Mb
Dimensions	
Width	30 mm
Height	129 mm
Depth	136.5 mm

© Siemens AG 2024

Overview

Tasks of the RS 485-iS coupler

- Conversion of the electrical PROFIBUS DP RS 485 transmission technology into the intrinsically-safe RS 485-iS transmission technology with a transmission rate of 1.5 Mbps
- Required to connect intrinsically-safe PROFIBUS DP stations, e.g. ET 200iSP or devices from other vendors with Ex i DP connection
- Acts as a safety barrier
- Additional use as a repeater in the hazardous area
- Passive bus station (no configuration necessary)
- Certified according to ATEX 100a

Design

- The RS 485-iS coupler is an open unit; assembly is only permissible in enclosures, cabinets or rooms for electrical equipment.
- The RS 485-iS coupler is approved for use in Zone 2 hazardous areas. For this purpose, it must be fitted in an enclosure complying at least with degree of protection IP54. A manufacturer's declaration for zone 2 (according to EN 50021) is required for the enclosure and the necessary cable glands.
- The RS 485-iS coupler can be used in a horizontal or vertical position.
- Installation is on a SIMATIC S7-300 rail.
- Diagnostics LEDs on the front panel signal the operating status.

Connection to PROFIBUS DP

- Connection to standard PROFIBUS DP via standard Sub-D socket (at the bottom on the RS 485-iS coupler, behind the right front door).

Integrated bus connection for PROFIBUS DP with RS 485-iS transmission technology

- Connection of PROFIBUS DP with RS 485-iS transmission technology via screw terminals (at the top of the RS 485-iS coupler, behind the right front door)
- The last bus node on the intrinsically safe PROFIBUS DP segment (not further RS 485-iS couplers) must be terminated by a selectable terminating resistor using the connector, article number 6ES7972-0DA60-0XA0.

Selection and ordering data

RS 485-iS coupler Isolating transformer for connection of PROFIBUS DP segments with RS 485 and RS 485-iS transmission systems	6ES7972-0AC80-0XA0
Accessories	
PROFIBUS connection plug with selectable terminating resistor For connection of IM 152 to PROFIBUS DP with RS 485-iS transmission technology	6ES7972-0DA60-0XA0
S7-300 DIN rails Lengths:	
• 160 mm	6ES7390-1AB60-0AA0
• 482 mm	6ES7390-1AE80-0AA0
• 530 mm	6ES7390-1AF30-0AA0
• 830 mm	6ES7390-1AJ30-0AA0
• 2 000 mm	6ES7390-1BC00-0AA0
PROFIBUS FastConnect standard cable, violet Standard type with special design for fast mounting, 2-wire, shielded, cut-to-length Specify length in m Max. delivery unit 1 000 m, minimum order quantity 20 m	6XV1830-0EH10
Preferred lengths	
- 20 m	6XV1830-0EN20
- 50 m	6XV1830-0EN50
- 100 m	6XV1830-0ET10
- 200 m	6XV1830-0ET20
- 500 m	6XV1830-0ET50
- 1 000 m	6XV1830-0EU10
PROFIBUS FastConnect standard cable IS GP, blue Cable type for use in potentially explosive atmospheres, with special design for fast mounting, 2-wire, shielded, cut-to-length Specify length in m Max. delivery unit 1 000 m, minimum order quantity 20 m	6XV1831-2A

© Siemens AG 2024

Technical specifications

Technical specifications - RS 485-iS coupler	
Dimensions and weight	
Dimensions W x H x D (mm)	80 × 125 × 130
Weight	Approx. 500 g
Technical specifications - General	
Degree of protection	IP20
Ambient temperature	- 20 ...+ 60 °C
Standards and approvals	
• PROFIBUS	IEC 61784-1:2002 Ed1 CP 3/1
• EU directive	94/9/EG (ATEX 100a)
• CENELEC	II 3 (2) G EEx nA[ib] IIC T4
• UL and CSA	Class I, Division2, Group A, B, C, D T4 Class I Zone 2, Group IIC T4 AIS Class I, Divison 1, Group A, B, C, D [Aexib] IIC, Class I, Zone1, 2, Group IIC
• FM	Class I, Division2, Group A, B, C, D T4 Class I Zone 2, Group IIC T4 AIS Class I, Divison 1, Group A, B, C, D [Aexib] IIC, Class I, Zone1, 2, Group IIC
• IEC	IEC61131-2, Part 2
• CE	Conforming with 89/336/EWG Conforming with 73/23/EWG
• Ship-building certification	Classification companies • ABS (American Bureau of Shipping) • BV (Bureau Veritas) • DNV (Det Norske Veritas) • GL (Germanischer Lloyd) • LRD (Lloyds Register of Shipping) • Class NK (Nippon Kaiji Kyokai)
Module-specific Data	
Transfer rate on PROFIBUS DP, PROFIBUS RS 485-iS	9.6; 19.2; 45.45; 93.75; 187.5; 500 kbps 1.5 Mbps
Bus-Protocol	PROFIBUS DP
Voltages, Currents, Potentials	
Rated supply voltage of RS 485-iS coupler	24 V DC (20.4 ... 28.8 V)
• Reverse polarity protection	Yes
• Voltage failure bypass	Min. 5 ms
Electrical isolation of 24 V power supply	
• to PROFIBUS DP	Yes
- tested with	500 V DC
• to PROFIBUS RS 485-iS	Yes
- tested with	AC 500 V
Current consumption RS 485-iS coupler (24 V DC), max.	150 mA
Power loss of the module, typically	3 Watts
Status, alarms, diagnostics	
Status display	no
Alarms	None
Diagnostic functions	Yes
• Bus monitoring PROFIBUS DP (primary)	Yellow LED "DP1"
• Bus monitoring PROFIBUS RS 485-iS (secondary)	Yellow LED "DP2"
• Monitoring 24 V power supply	Green LED "ON"
Technical safety notice	
V_{DC}	±4.2 V
I_{SC}	±93 mA

Technical specifications (continued)

Technical specifications - RS 485-iS coupler		
P_0	0.1 Watts	
V_{max}	±4.2 V	
L_i	0	
C_i	0	
U_m	AC 250 V	
T_a	-25 ... +60 °C	
RS 485-IS segment		
permissible cable length on a single line	RS 485-iS	DP Ex i
• 9.6 to 187.5 Kbps	1 000 m	200 m
• 500 kbit/s	400 m	200 m
• 1.5 Mbps	200 m	200 m
Number of PROFIBUS DP nodes that can be connected, max.	31	16
PROFIBUS RS 485-iS bus terminator switch	integrated, can be added	

© Siemens AG 2024

Design

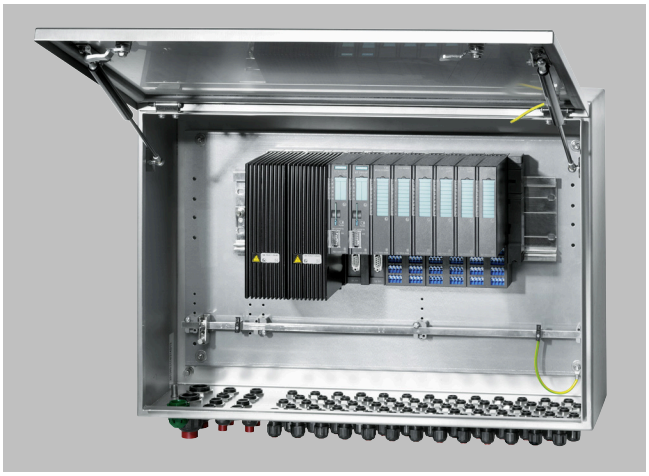

ET 200iSP modules can also be installed in stainless steel wall boxes designed to meet more exacting degree of protection requirements. The enclosures are available in various sizes. They comply with degree of protection IP65/66 and can be used in Ex zones 1 and 21 (including hazardous zones 2 and 22).

Depending on requirements, delivery is possible as an empty enclosure with ATEX component certificate or including installations with ATEX device certificate.

Send your request to: cabinets.industry@siemens.com

Selection and ordering data

	Article No.				
Stainless steel enclosure IP65/IP66 for SIMATIC ET 200iSP	6DL2804-				
	●	●	●	●	●
Enclosure					
Ex enclosure, stainless steel 1.4404, IP65/IP66, with mounting plate and PA rail, empty enclosure prepared for installation of ET 200iSP components[1], including ATEX component certificate	0				
Ex device, IP65/IP66, consisting of stainless steel enclosure 1.4404 with built-in ET 200iSP components[2], including ATEX Ex device certificate	1				
Ex device, IP65/IP66, consisting of stainless steel enclosure 1.4404 with built-in ET 200iSP and pneumaticcomponents[2], including ATEX Ex device certificate	2				
Device group					
Device group II, up to zone 1 (including zone 2)		A			
Device group II, up to zone 1 and zone 21 (including zone 2 and zone 22)		D			
Enclosure dimensions W × H × D (in mm)					
650 × 450 × 230, for up to 14 ET 200iSP modules (IM/EM), with redundant power supply up to 12 ET 200iSP modules (IM/EM)			D		
950 × 450 × 230, for up to 24 ET 200iSP modules (IM/EM), with redundant power supply up to 22 ET 200iSP modules (IM/EM)			E		
Cable entries/number					
M16 cable entries for signals, 3 rows, 39 or 66 units[3], 2 × M32 for supply voltage, 4 × M20 for bus cables				3	
M20 cable entries for signals, 3 rows, 36 or 57 units[3], 2 × M32 for supply voltage, 4 × M20 for bus cables				4	
M16 cable entries for signals, 5 rows, 65 or 110 units[3], 2 × M32 for supply voltage, 4 × M20 for bus cables				5	
M20 cable entries for signals, 5 rows, 60 or 95 units[3], 2 × M32 for supply voltage, 4 × M20 for bus cables				6	
Degree of protection, material cable entries, material air breather glands					
IP65, cable entries polyamide black, breather glands polyamide					0
IP66, cable entries nickel-plated brass, breather glands stainless steel 1.4404					1
IP65, cable entries polyamide blue, breather glands polyamide					2

1) The supplied certificate is only valid for the empty enclosure.
2) The supplied certificate is valid for the supplied enclosure, including the installed components.
3) Number of cable entries/signals depends on enclosure dimensions

© Siemens AG 2024

Technical specifications

SIMATIC ET 200iSP, stainless steel wall box	
Material	Stainless steel 1.4404 (SS 316L), sheet thickness 1.5 mm
Cover seal	Silicone foam
Range of ambient temperature	• -20 °C ... +xx °C, maximum temperature depending on the installed components • Minus temperatures down to -40 °C when heater installed. This takes up 2 slots for ET 200iSP modules. The heater (6DL9910-8AA) must be ordered separately.
Other special features	• With breather glands • Door opens upwards with gas compression springs • With sealing plug for unused cable entries • With suspension for wall mounting

Options

Special configurations

For special configurations which differ from the standard configurations, we will gladly make you a customized offer to suit your individual needs.

Please send your request to
cabinets.industry@siemens.com

© Siemens AG 2024

Overview

Within the SIMATIC ET 200 range, ET 200M represents one of the main series of distributed I/O systems for process control applications with SIMATIC PCS 7.

The ET 200M I/O system offers a comprehensive range of I/O modules of S7-300 design, including ones with special I&C functions:

- Standard analog and digital modules
- Redundant I/O modules
- I/O modules with enhanced diagnostics capability
- Ex I/O modules
- Controller and counter modules
- HART modules
- F-modules for safety-related applications

When using active bus modules, faulty I/O modules can be replaced while the plant is in operation (RUN) without influencing adjacent modules (hot swapping function).

The following actions are possible with the automation system in RUN:

- Adding new modules to the station
- Re-configuration of modules
- Addition of ET 200M stations
- Configuration of connected HART field devices with SIMATIC PDM

Note:

Apart from these selected modules, it is also possible to use - with limitations in functions - all other I/O modules from the current range of S7-300 signal modules.

Design

An ET 200M remote I/O station comprises:

- 1 or 2 (redundant) power supply modules (can be omitted in the case of a central 24 V DC supply for the plant)
- Up to 2 interface modules:
  - 1 or 2 (redundant) IM 153-2 High Feature for PROFIBUS DP connection or
  - 1 IM 153-4 PN High Feature for PROFINET connection
- Up to 12 I/O modules for connection of sensors/actuators

All I/O modules have optical electrical isolation from the backplane bus. Up to 12 I/O modules can connected to an IM 153-2 High Feature or IM 153-4 PN High Feature interface module. The IM 153-2 High Feature interface modules can also be configured redundantly.

In addition to the standard SIMATIC S7 I/O modules, special I/O modules with diagnostics capability offer the following functions, among others:

- Channel-based diagnostics, e.g. open-circuit, short-circuit, limit violations
- Internal module monitoring, e.g. configuration error, RAM error, tripped fuse
- Flatter monitoring for sensors
- Pulse stretching
- Output of a programmable substitute value on failure of the central unit

In the event of a fault, the modules with diagnostics capability automatically pass on the corresponding message to the operator station, permitting fast and simple troubleshooting.

The ET 200M stations can be operated in standard environments as well as in Ex zone 2. The actuators/sensors can be positioned in Ex zone 1/21 when suitable Ex input/output modules are used. Hot swapping of I/O modules within Ex zone 2 is allowed with the right permit (e.g. fire certificate).

Technical specifications

You can find detailed technical data on the ET 200M and S7-300 I/O modules in the following places:

- Catalog ST 70, Chapter "IO Systems" or
- Industry Mall/CA 01 under "Automation technology - Automation systems - SIMATIC industrial automation systems - IO systems - SIMATIC ET 200 systems for control cabinets" – SIMATIC ET 200M"

© Siemens AG 2024

Options

SIPLUS extreme range for extended temperature ranges and corrosive environments

The "standard" properties of an individual device or system are often insufficient for harsh environmental conditions, applications in corrosive environments or extreme temperature ranges. Depending on the location of use, the result could be limitations in functionality or operational safety or even total failure of the plant.

The SIPLUS extreme range offers individually adapted standard products which permit retention of the functionality of your plant or process even under extreme conditions of use. These include:

- Ambient temperature range from -25 to +60/+70 °C
- Condensation, high humidity
- Increased mechanical stress
- Extreme loading by media, e.g. toxic atmospheres
- Voltage ranges deviating from the standard
- Increased degree of protection (dust, water)

You can find a summary of the available range of products classified according to their special properties on the Internet. The corresponding SIPLUS product is assigned there to the standard product:

Note:
SIPLUS products are also included in the ST 70 Catalog.

© Siemens AG 2024

Overview

You can use the PS 307 or PS 305 load power supplies as the power supply module for the ET 200M. You can select different input voltages and output currents (120/230 V AC with 2 A, 5 A or 10 A or 24 to 110 V DC with 2 A) depending on the application.

With a redundant ET 200M configuration, it is also recommendable to have a redundant 24 V DC supply, e.g. with two PS 307/PS 305 load current supplies.

Selection and ordering data

PS 307 load power supply with power connector • 120/230 V AC; 24 V DC	
- 2 A; 40 mm wide	**6ES7307-1BA01-0AA0**
- 5 A; 60 mm wide	**6ES7307-1EA01-0AA0**
- 5 A, extended temperature range; 80 mm wide	**6ES7307-1EA80-0AA0**
- 10 A, 80 mm wide	**6ES7307-1KA02-0AA0**
PS 305 load power supply with power connector • 24/48/60/110 V DC; 24 V DC	
- 2 A, extended temperature range; 80 mm wide	**6ES7305-1BA80-0AA0**

© Siemens AG 2024

Overview

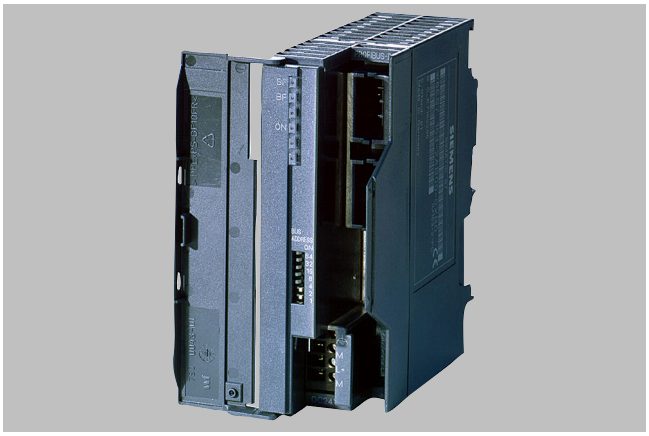

Interface module IM 153-2 High Feature Outdoor for PROFIBUS connection

Interface module for the PROFIBUS connection

The IM 153-2 High Feature and IM 153-2 High Feature Outdoor (electrical PROFIBUS DP transmission mode) interface modules are available for connecting the ET 200M remote I/O station to the PROFIBUS DP fieldbus. Depending on the fieldbus configuration (single/redundant), the ET 200M remote I/O station can be connected via one single or two redundant interface modules.

IM 153-4 High Feature interface module for PROFINET connection

Interface module for PROFINET connection

The IM 153-4 PN High Feature interface module is used to connect the ET 200M remote I/O station to PROFINET via copper cables (RJ45). It autonomously handles communication between the I/O modules and the higher-level PROFINET I/O controller.

Function

IM 153-2 High Feature and IM 153-2 High Feature Outdoor

The IM 153-2 High Feature and IM 153-2 High Feature Outdoor support the following functions:

- HART configuring of intelligent field devices
- Configuration of ET 200M I/Os in RUN mode of the automation system
- Connection to redundant automation systems
- Use of ET 200M function modules (controller and counter modules)
- Operation of up to 12 I/O modules per remote I/O station
- Time stamping (SOE) with the safety-related SM 326F digital input module (F-DI24)
- Transmission of additional values with HART secondary variables of the HART SM 331 and SM 332 analog modules (up to 4 per channel or up to 8 per module)

IM 153-4 PN High Feature

- Integrated 2-port switch
- Baud rate 10 Mbps / 100 Mbps (Autonegotiation/Full Duplex)
- Operation of up to 12 I/O modules per remote I/O station
- I&M functions in accordance with PROFIBUS International Guidelines, order no. 3.502, version V1.1

Note:

In order to be able to use the hot swap function, use of the active bus module and the mounting rail for hot swap is necessary (see under the following section "Accessories").

Selection and ordering data

Interface module for the PROFIBUS connection	
IM 153-2 High Feature Outdoor Interface module for PROFIBUS DP for ET 200M, PA Link and Y Link; redundancy capable; conformal coating, IP20 degree of protection; permissible operating temperature -25 ... +60 °C	**6ES7153-2BA70-0XB0**
IM 153-2 High Feature Interface module for PROFIBUS DP for ET 200M; redundancy capable; permissible operating temperature 0 ... +60 °C	**6ES7153-2BA10-0XB0**
Interface module for the PROFINET connection	
IM 153-4 PN High Feature Interface for connecting an ET 200M station to PROFINET	**6ES7153-4BA00-0XB0**

© Siemens AG 2024

Overview

Following components are available as accessories for the ET 200M:

- Bus modules for connection/disconnection of modules during operation (hot swapping)
- Mounting rail for connection and disconnection of modules during operation
- Covers for backplane bus and bus modules
- Front connectors
- Ex partition for ET 200M
- DM 370 dummy module
- LK 393 cable guide

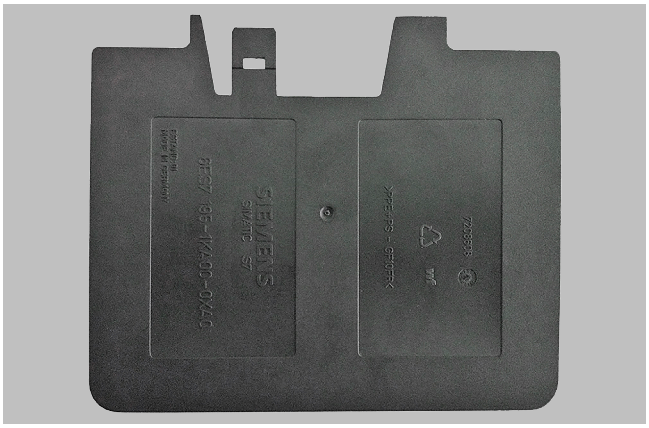

Ex partition for ET 200M

Ex partition

Mechanical isolation is required between the IM 153 interface module and the first Ex I/O module. For the hot swapping function, an Ex partition is installed which guarantees the prescribed isolation distance between non-intrinsically safe and intrinsically safe areas of an ET 200M remote I/O station.

Note:

The Ex partition must be used in connection with bus modules with active backplane bus. If no bus modules with active backplane bus are being used, the DM 370 dummy module can be used instead.

DM 370 dummy module

Overview (continued)

DM 370 dummy module

- Reservation of slots for unconfigured I/O modules
- Retention of design and address assignment when replacing by I/O module

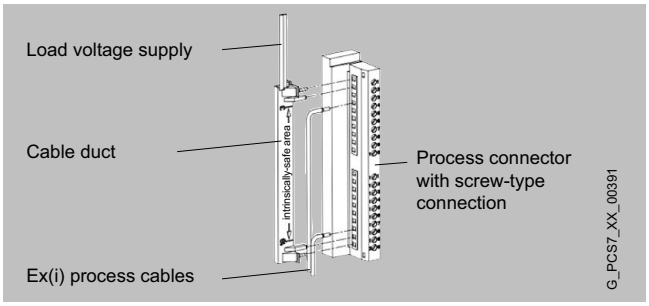

LK 393 cable guide

LK 393 cable guide

The LK 393 cable guide provides the prescribed isolation between the load voltage input and the intrinsically safe inputs/outputs. The cable guide is easy to fit following insertion of the load voltage inputs L+.

Design

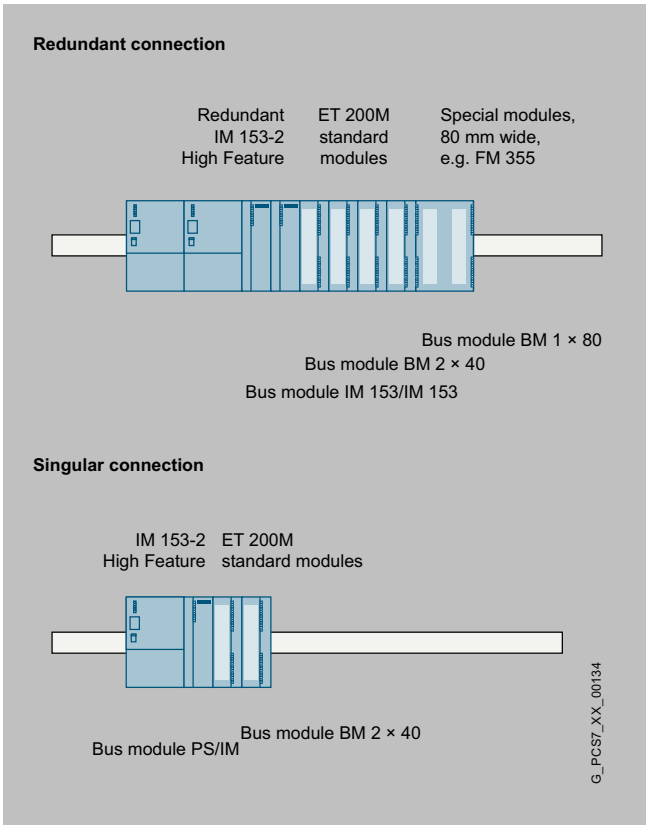

The figure shows the use of the various bus modules for hot swapping modules - at the top for a redundant connection, at the bottom for a non-redundant connection.

© Siemens AG 2024

Selection and ordering data

Bus modules for hot swapping	
• BM PS/IM for load current supply and IM 153, including 1 bus module cover	6ES7195-7HA00-0XA0
• BM 2 × 40 for 2 modules, width 40 mm	6ES7195-7HB00-0XA0
• BM 1 × 80 for 1 module, width 80 mm	6ES7195-7HC00-0XA0
• BM IM/IM Outdoor for 2 IM 153-2 for configuring redundant systems	6ES7195-7HD80-0XA0
• BM IM/IM for 2 IM 153-2/-2 FO for configuring redundant systems	6ES7195-7HD10-0XA0
DIN rail for hot swapping	
• 482 mm long (19 inches)	6ES7195-1GA00-0XA0
• 530 mm long	6ES7195-1GF30-0XA0
• 620 mm long	6ES7195-1GG30-0XA0
• 2 000 mm long, for vertical installation	6ES7195-1GC00-0XA0
Covers Package with 4 backplane bus covers and 1 bus module cover	6ES7195-1JA00-0XA0
Front connector (1 unit)	
• 20-pin, with screw contacts	6ES7392-1AJ00-0AA0
• 20-pin, with spring contacts	6ES7392-1BJ00-0AA0
• 40-pin, with screw contacts	6ES7392-1AM00-0AA0
• 40-pin, with spring contacts	6ES7392-1BM01-0AA0
Front connector for Ex analog input module 6ES7331-7SF00-0AB0 (1 unit) • 20-pin, with screw contacts Enables an accuracy of ±1.5 °K for the internal cold junction temperature when taking thermocouple temperature measurements in the "internal compensation" measuring mode at ambient temperatures of 0 to 60 °C	6ES7392-1AJ20-0AA0
Ex partition for ET 200M[1)] • Separation of IM 153 and downstream Ex modules within an ET 200M line • Mixed operation of non-Ex and Ex modules within an ET 200M line • For supporting the hot swapping function in connection with IM 153-2	6ES7195-1KA00-0XA0
DM 370 dummy module[1)] Including bus connector, labeling strips	6ES7370-0AA01-0AA0
LK 393 cable duct [EEx ib] IIC-conform routing of load voltage cable in front plug, 5 units	6ES7393-4AA00-0AA0

1) The Ex partition must be used in connection with bus modules with active backplane bus. If no bus modules with active backplane bus are being used, the DM 370 dummy module can be used instead.

© Siemens AG 2024

Overview

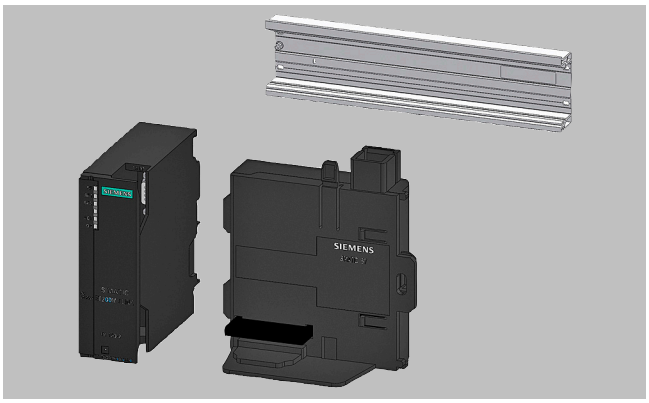

I/O subsystem for ET 200M

The following bundles are available for ET 200M:

- I/O subsystem for PA Link or ET 200M stations with up to 8 I/O modules suitable for hot swapping, consisting of:
  - DIN rail for active bus modules, 482 mm long (19 inches)
  - PS/IM bus module
  - PROFIBUS DP interface IM 153-2 High Feature Outdoor
- I/O subsystem extended for PA Link or ET 200M stations with up to 12 I/O modules suitable for hot swapping, consisting of:
  - DIN rail for active bus modules, 620 mm long
  - PS/IM bus module
  - PROFIBUS DP interface IM 153-2 High Feature Outdoor
- RED I/O subsystem for operation of a PA Link or an ET 200M station on a redundant automation system of the S7-400 series, suitable for hot swapping, consisting of:
  - 2 PROFIBUS DP interface modules IM 153-2 High Feature Outdoor
  - 1 active bus module IM/IM Outdoor

Selection and ordering data

I/O subsystem for PA Link or ET 200M For PA Link or for ET 200M stations with up to 8 I/O modules, suitable for hot swapping, consisting of: • DIN rail for active bus modules, 482 mm long (19 inches) • PS/IM bus module • PROFIBUS DP interface IM 153-2 High Feature Outdoor	**6ES7654-0XX10-1XA0**
I/O subsystem extended for PA Link or ET 200M For PA Link or for ET 200M stations with up to12 I/O modules, suitable for hot swapping, consisting of: • DIN rail for active bus modules, 620 mm long • PS/IM bus module • PROFIBUS DP interface IM 153-2 High Feature Outdoor	**6ES7654-0XX10-1XB0**
RED I/O subsystem for PA Link or ET 200M For operation of a PA Link or an ET 200M station on a redundant automation system of the S7-400 series, suitable for hot swapping, consisting of: • 2 PROFIBUS DP interfaces IM 153-2 High Feature Outdoor • 1 active bus module IM/IM Outdoor	**6ES7654-0XX20-0XA0**

© Siemens AG 2024

Overview

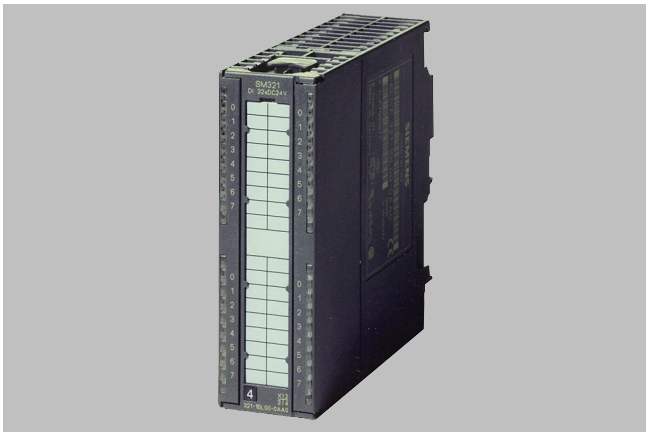

Digital input modules

- Simple signal modules for DC and AC voltage
- Modules with diagnostics capability that automatically output a corresponding message to the Operator System in the event of a fault

Digital output modules

- Simple signal modules for DC and AC voltage with different output currents per channel, where various relay modules are available for larger output currents and voltages
- Modules with diagnostics capability which provide information for fault diagnosis and also permit parameterizable reactions to failure of the automation system

Digital input/output modules

- Standard signal module for DC voltage (24 V DC) with 8 digital inputs and 8 digital outputs
- For connection of switches, 2-wire proximity switches (BERO), solenoid valves, contactors, signal lamps

Selection and ordering data

Digital input modules

SM 321 for floating contacts (supply with DC voltage)	
16 inputs, 24 V DC **Redundancy optional** (module-granular redundancy) • Isolated in groups of 16 • Front connector required: 20-pin	**6ES7321-1BH02-0AA0**
16 inputs, 24 V DC • Isolated in groups of 16; active low • Front connector required: 20-pin	**6ES7321-1BH50-0AA0**
16 inputs, 24 V DC, high-speed • Isolated in groups of 16 • 0.05 ms input delay • Front connector required: 20-pin	**6ES7321-1BH10-0AA0**
32 inputs, 24 V DC **Redundancy optional** (module-granular redundancy) • Isolated in groups of 16 • Front connector required: 40-pin	**6ES7321-1BL00-0AA0**
16 inputs, 48 ... 125 V DC • Isolated in groups of 8 • Front connector required: 20-pin	**6ES7321-1CH20-0AA0**
64 inputs, 24 V DC • Isolated in groups of 16; active high/low Note: 2 connection cables 6ES7392-4B..0-0AA0 and 2 terminal blocks 6ES7392-1.N00-0AA0 required per module.	**6ES7321-1BP00-0AA0**
S7-300 cable for 64-channel modules; 2 units	
• 1 m	**6ES7392-4BB00-0AA0**
• 2.5 m	**6ES7392-4BC50-0AA0**
• 5 m	**6ES7392-4BF00-0AA0**
Terminal block for 64-channel modules; 2 units	
• With screw contacts	**6ES7392-1AN00-0AA0**
• With spring-loaded contacts	**6ES7392-1BN00-0AA0**
SM 321 for floating contacts (supply with DC/AC voltage)	
16 inputs, 24 ... 48 V AC/DC • Isolated in groups of 1 • Front connector required: 40-pin	**6ES7321-1CH00-0AA0**
SM 321 for floating contacts (supply with AC voltage)	
32 inputs, 120 V AC • Isolated in groups of 8 • Front connector required: 40-pin	**6ES7321-1EL00-0AA0**
8 inputs, 120/230 V AC **Redundancy optional** (module-granular redundancy) • Isolated in groups of 2 • Front connector required: 20-pin	**6ES7321-1FF01-0AA0**
16 inputs, 120/230 V AC • Isolated in groups of 4 • Front connector required: 20-pin	**6ES7321-1FH00-0AA0**

© Siemens AG 2024

Selection and ordering data (continued)

SM 321 for non-floating contacts (supply with AC voltage)	
8 inputs, 120/230 V AC • Isolated in groups of 1 • Front connector required: 40-pin	6ES7321-1FF10-0AA0
SM 321 modules with diagnostics capability (IM 153-2 High Feature interface module required) for isolated contacts (supplied with DC voltage)	
16 inputs, 24 V DC **Redundancy optional** (channel-granular redundancy) • Isolated in groups of 16 • Time stamping in association with IM 153-2 High Feature, accuracy 1 ms, rising or falling edge, can be configured channel-granular • Two short-circuit-proof sensor supplies for 8 channels each • Sensor supply by the module, additional external redundant sensor supply possible • Diagnostics of missing sensor supply for channel group (8 channels) • Diagnostics inside module • Channel-granular wire break monitoring • Front connector required: 20-pin	6ES7321-7BH01-0AB0
16 inputs, NAMUR **Redundancy optional** (channel-granular redundancy) • Isolated in groups of 8 • Time stamping in association with IM 153-2 High Feature, accuracy 10 ms, rising or falling edge, can be configured channel-granular • Two sensor supplies (8.2 V DC or 18 V DC each) • Connection of NAMUR sensors or contacts with resistor circuit • Pulse stretching • Channel-granular diagnostics (short-circuit, open-circuit, chatter monitoring, discrepancy with changeover contacts) • Diagnostics inside module • Front connector required: 40-pin	6ES7321-7TH00-0AB0
16 inputs, 24 to 125 V DC • Isolated in groups of 16 • Time stamping in association with IM 153-2 High Feature, accuracy 1 ms, rising or falling edge, can be configured channel-granular • Diagnostics inside module • Channel-granular wire break monitoring • Front connector required: 40-pin	6ES7321-7EH00-0AB0

Selection and ordering data (continued)

Digital output modules

SM 322 for DC voltage Suitable for solenoid valves, contactors, indicator lights, etc.	
8 outputs, 24 V DC / 2 A **Redundancy optional** (channel-granular redundancy) • Isolated in groups of 4 • Front connector required: 20-pin	6ES7322-1BF01-0AA0
16 outputs, 24 V DC, 0.5 A • Isolated in groups of 8 • Front connector required: 20-pin	6ES7322-1BH01-0AA0
16 outputs, 24 V DC / 0.5 A, high speed • Isolated in groups of 8 • Output delay max. 0.2 ms • Front connector required: 20-pin	6ES7322-1BH10-0AA0
32 outputs, 24 V DC / 0.5 A **Redundancy optional** (module-granular redundancy) • Isolated in groups of 8 • Front connector required: 40-pin	6ES7322-1BL00-0AA0
8 outputs, 48 ... 125 V DC / 1.5 A • Isolated in groups of 4 • Front connector required: 20-pin	6ES7322-1CF00-0AA0
64 outputs, 24 V DC, 0.3 A, source output • Isolated in groups of 16 Note: 2 connection cables 6ES7392-4B..0-0AA0 and 2 terminal blocks 6ES7392-1.N00-0AA0 required per module.	6ES7322-1BP00-0AA0
64 outputs, 24 V DC, 0.3 A, sink output • Isolated in groups of 16 Note: 2 connection cables 6ES7392-4..0-0AA0 and 2 terminal blocks 6ES7392-1.N00-0AA0 required per module.	6ES7322-1BP50-0AA0
S7-300 cable for 64-channel modules; 2 units	
• 1 m	6ES7392-4BB00-0AA0
• 2.5 m	6ES7392-4BC50-0AA0
• 5 m	6ES7392-4BF00-0AA0
Terminal block for 64-channel modules; 2 units	
• With screw contacts	6ES7392-1AN00-0AA0
• With spring-loaded contacts	6ES7392-1BN00-0AA0
SM 322 for AC voltage Suitable for AC solenoid valves, contactors, motor starters, small-power motors and indicator lights	
8 outputs, 120/230 V AC / 2 A **Redundancy optional** (module-granular redundancy) • Isolated in groups of 4 • Front connector required: 20-pin	6ES7322-1FF01-0AA0

© Siemens AG 2024

Selection and ordering data (continued)

16 outputs, 120/230 V AC, 1 A • Isolated in groups of 8 • Front connector required: 20-pin	6ES7322-1FH00-0AA0
32 outputs, 120/230 V AC, 1 A • Isolated in groups of 8 • Front connector required: 2 × 20-pin	6ES7322-1FL00-0AA0
SM 322 for relay output Suitable for AC/DC solenoid valves, contactors, motor starters, small-power motors, and indicator lights	
8 outputs, 24 ... 120 V DC, 48 ... 230 V AC, max. 2 A • Isolated in groups of 2 • Front connector required: 20-pin	6ES7322-1HF01-0AA0
8 outputs, 24 ... 120 V DC, 48 ... 230 V AC, max. 5 A • Isolated in groups of 1 • Front connector required: 40-pin	6ES7322-1HF10-0AA0
16 outputs, 24 ... 120 V DC, 48 ... 230 V AC, max. 2 A • Isolated in groups of 8 • Front connector required: 20-pin	6ES7322-1HH01-0AA0
SM 322 modules with diagnostics capability (with channel and module diagnostics) for DC voltage Suitable for solenoid valves, DC contactors and indicator lights	
8 outputs, 24 V DC / 0.5 A **Redundancy optional** (module-granular redundancy) • Isolated in groups of 8 • 2 connections per output (with and without series diode) • Connection of a default value per channel in the event of CPU stop (configurable) • Wire break monitoring per channel • Load voltage monitoring per channel • Short-circuit monitoring to M/L+ per channel • Module-internal diagnostics functions • Front connector required: 20-pin	6ES7322-8BF00-0AB0
16 outputs, 24 V DC / 0.5 A **Redundancy optional** (module-granular redundancy) • Isolated in groups of 4 • Connection of a default value per channel in the event of CPU stop (configurable) • Wire break monitoring per channel (with 0 and 1 signals) • Signaling of output overload • Discrepancy error monitoring • Load voltage monitoring or ground monitoring per channel group • Short-circuit monitoring to M/L+ per channel group • Module-internal diagnostics functions • Front connector required: 40-pin	6ES7322-8BH10-0AB0

Selection and ordering data (continued)

for AC voltage Suitable for AC solenoid valves, contactors, motor starters, small-power motors and indicator lights	
8 outputs, 120/230 V AC, 2 A • Isolated in groups of 1 • Connection of a default value per channel in the event of CPU stop (configurable) • Module-internal diagnostics functions • Front connector required: 40-pin	6ES7322-5FF00-0AB0
16 outputs, 24/48 V DC, 0.5 A • Isolated in groups of 1 • Connection of a default value per channel in the event of CPU stop (configurable) • Module-internal diagnostics functions • Front connector required: 40-pin	6ES7322-5GH00-0AB0
For relay output Suitable for AC/DC solenoid valves, contactors, motor starters, small-power motors and indicator lights	
8 outputs, 24 ... 120 V DC, 24 ... 230 V AC, max. 5 A • Isolated in groups of 1 • With RC suppressor element for protection of contacts per channel • Connection of a default value per channel in the event of CPU stop (configurable) • Module-internal diagnostics functions • Front connector required: 40-pin	6ES7322-5HF00-0AB0

Digital input/output modules

SM 323 for DC voltage Suitable for switches, BERO proximity switches, solenoid valves, contactors, indicator lights, etc. • 8 inputs 24 V DC - Suitable for connection of 2-wire proximity switches (BERO) as sensors • 8 outputs, 24 V DC, 0.5 A • Inputs and outputs electrically isolated in groups of 8 • Front connector required: 20-pin	6ES7323-1BH01-0AA0

The technical specifications of the other modules listed in the ordering data can be found in Catalog ST 70.

© Siemens AG 2024

Technical specifications

Article number	6ES7321-7TH00-0AB0	6ES7321-7EH00-0AB0
Supply voltage		
• Load voltage L+		
• Rated value (DC)	24 V	24 V
Input current		
from load voltage L+ (without load), max.	100 mA	
from backplane bus 5 V DC, max.	100 mA	90 mA
Encoder supply		
Number of outputs	4	
• Output current		
• Rated value	190 mA; at 18V: 190mA, at 8.2V: 60mA	
Power loss		
Power loss, typ.	11 W	2 W; V_in = 24 V DC
Digital inputs		
Number of digital inputs	16	16
Input characteristic curve in accordance with IEC 61131, type 1	No	Yes
Input characteristic curve in accordance with IEC 61131, type 2	Yes	
• Input voltage		
• Type of input voltage	DC	
• Rated value (DC)	8.2 V; 8.2V/18V	24 V; 24 V DC to 125 V DC
• for signal "0"		-146 to 5V
• for signal "1"		15 to 146V
• Input current		
• for signal "1", typ.	10 mA; for NAMUR: 2.1 to 7 mA, for 10k ohm/47k ohm contact: typical 10mA, for 4 wire BEROs: typical 10 mA	3.5 mA
• Input delay (for rated value of input voltage)		
• for standard inputs		
• parameterizable		Yes; 0.1 / 0.5 / 3 / 15 / 20 ms
• at "0" to "1", min.	2.5 ms	
• at "0" to "1", max.	3.5 ms	
• Cable length		
• shielded, max.	400 m; max. 200m with 8.2 V sensor, max. 400m with 18 V sensor	1 000 m
Encoder		
• Connectable encoders		
• 2-wire sensor		Yes
• permissible quiescent current (2-wire sensor), max.		1 mA
Interrupts/diagnostics/status information		
Alarms	Yes	
Diagnostics function	Yes	Yes; Parameterizable
• Alarms		
• Diagnostic alarm	Yes	Yes; Parameterizable
• Hardware interrupt	Yes	Yes; Parameterizable
Ambient conditions		
• Ambient temperature during operation		
• min.	0 °C	0 °C
• max.	60 °C	60 °C
connection method / header		
required front connector	1x 40-pin	1x 40-pin
Dimensions		
Width	40 mm	40 mm
Height	125 mm	125 mm

© Siemens AG 2024

Technical specifications (continued)

Article number	6ES7321-7TH00-0AB0	6ES7321-7EH00-0AB0
Depth	120 mm	120 mm
Weights		
Weight, approx.		200 g

Article number	6ES7322-8BH10-0AB0
Supply voltage	
• Load voltage L+	
• Rated value (DC)	24 V
Input current	
from load voltage L+ (without load), max.	100 mA
from backplane bus 5 V DC, max.	100 mA
Power loss	
Power loss, typ.	6 W
Digital outputs	
Number of digital outputs	16
Short-circuit protection	Yes
Limitation of inductive shutdown voltage to	L+ (-68 V)
• Switching capacity of the outputs	
• on lamp load, max.	5 W
• Load resistance range	
• lower limit	48 Ω
• upper limit	4 kΩ
• Output voltage	
• for signal "1", min.	L+ (-0.7 V)
• Output current	
• for signal "1" rated value	0.5 A
• for signal "0" residual current, max.	0.7 mA
• Switching frequency	
• with resistive load, max.	100 Hz
• on lamp load, max.	10 Hz
• Total current of the outputs (per group)	
• horizontal installation	
• up to 60 °C, max.	2 A
• vertical installation	
• up to 40 °C, max.	2 A
• Cable length	
• shielded, max.	1 000 m
Interrupts/diagnostics/status information	
Alarms	Yes
Diagnostics function	Yes
• Alarms	
• Diagnostic alarm	Yes
connection method / header	
required front connector	1x 40-pin
Dimensions	
Width	40 mm
Height	125 mm
Depth	120 mm
Weights	
Weight, approx.	350 g

© Siemens AG 2024

Overview

Analog input modules

- Multi-function modules for current, voltage and temperature measurements
- Special, highly accurate modules for current and voltage measurements or temperature measurements

All modules automatically supply channel-specific and module-internal diagnostics data, except module 6ES7331-1KF02-0AB0. With this module, a channel failure is detected by the SIMATIC PCS 7 analog driver block.

The channels of the analog input modules can be parameterized in groups independent of each other.

Analog output modules

- Modules with 12-bit resolution and different numbers of channels
- Highly accurate module with 15-bit resolution

The analog output modules can be parameterized in groups independent of each other, and automatically provide all channel-specific and module-internal diagnostics information.

Selection and ordering data

Analog input modules

SM 331 modules for current, voltage and temperature measurements	
8 inputs, individually configurable • Resolution 12 bit + sign • Current measurement (8 channels) 0/4 ... 20 mA, ±20 mA (2 wires with external supply or 4 wires) • Voltage measurement (8 channels) 1 ... 5 V, 0 ... 10 V, ±50 mV, ±500 mV, ±1 V, ±5 V, ±10 V • Resistance thermometer Pt100, Ni100, Ni1000, LG-Ni1000 (8 channels; 2, 3 or 4 wires) • Front connector required: 40-pin	**6ES7331-1KF02-0AB0**
8 inputs in 4 channel groups **Redundancy optional** (module-granular redundancy) • Changeover of measurement type by range module per channel group • Resolution 14 bit + sign • Current measurement (8 channels) 0 ... 20 mA, ±3.2 mA, ±10 mA, ±20 mA (4 wires) or 4 ... 20 mA (2 or 4 wires) • Voltage measurement (8 channels) 1 ... 5 V, 0 ... 10 V, ±50 mV, ±500 mV, ±1 V, ±5 V, ±10 V • Resistance thermometer Pt100, Ni100 (4 channels; 2, 3 or 4 wires) • Thermocouples type E, N, J, K, L (8 channels) Internal compensation or external compensation with compensating box or 0 °C cold junction • Wire break monitoring • Internal module diagnostics • Front connector required: 20-pin	**6ES7331-7KF02-0AB0**
2 inputs in 1 channel group • Changeover of measurement type by range module • Adjustable resolution per channel group: 9/12/14 bits + sign • Current measurement (2 channels) 0 ... 20 mA, ±3.2 mA, ±10 mA, ±20 mA (4 wires) or 4 ... 20 mA (2 or 4 wires) • Voltage measurement (2 channels) 1 ... 5 V, ±80 mV, ±250 mV, ±500 mV, ±1 V, ±2.5 V, ±5 V, ±10 V • Resistance thermometer Pt100, Ni100 (1 channel, 2 or 4 wires) • Thermocouples type E, N, J, K, L (2 channels) Internal compensation or external compensation with compensating box or 0 °C cold junction • Wire break monitoring • Internal module diagnostics • Front connector required: 20-pin	**6ES7331-7KB02-0AB0**

© Siemens AG 2024

Selection and ordering data (continued)

SM 331 modules for current and voltage measurements	
8 inputs in 4 channel groups, high speed • Resolution 13 bit + sign • Measurement type and range selection adjustable per channel group • Current measurement 0 ... 20 mA, ±20 mA (4 wires) or 4 ... 20 mA (2 or 4 wires) • Voltage measurement 1 ... 5 V, ±1 V, ±5 V, ±10 V • Limit monitoring adjustable for 2 channels • Fast updating of measured value • Supporting of isochronous mode • Internal module diagnostics • Front connector required: 20-pin	6ES7331-7HF01-0AB0
8 inputs in 4 channel groups **Redundancy optional** (channel-granular redundancy) • Resolution 15 bit + sign • Current measurement 0/4 ... 20 mA, ±20 mA (8 channels; 2 or 4 wires) • Voltage measurement 1 ... 5 V, ±5 V, ±10 V (8 channels) • Wire break monitoring with 4 ... 20 mA and 1 ... 5 V • Internal module diagnostics • Front connector required: 40-pin	6ES7331-7NF00-0AB0
8 inputs in 4 channel groups **Redundancy optional** (channel-granular redundancy) • Resolution 15 bit + sign • Fast module cycle (min. 10 ms for 4 channels) • Current measurement 0/4 ... 20 mA, ±20 mA (8 channels, 2 wires with external supply or 4 wires) • Voltage measurement 1 ... 5 V, ±5 V, ±10 V (8 channels) • Wire break monitoring with 4 ... 20 mA and 1 ... 5 V, ±5 V, ±10 V • Short-circuit-proof • Electrical isolation between channel groups • Internal module diagnostics • Front connector required: 40-pin	6ES7331-7NF10-0AB0

Selection and ordering data (continued)

SM 331 modules for temperature measurement	
8 inputs in 4 channel groups • Resolution 15 bit + sign • Resistance thermometer Pt100 ... 1000, Ni100 ... 1000, Cu10 (8 channels; 2, 3 or 4 wires) • Resistance measurement 150 Ω, 300 Ω, 600 Ω • Measuring mode (temperature or resistance) and measuring range adjustable per channel group • Short-circuit-proof • Wire break monitoring • Internal module diagnostics • Front connector required: 40-pin	6ES7331-7PF01-0AB0
8 inputs in 4 channel groups • Resolution 15 bit + sign • Thermocouples type B, C, N, E, R, S, J, L, T, K, U (8 channels), internal compensation; external compensation with Pt100 through separate inputs possible • Measuring range adjustable per channel group • Fast module cycle (10 ms for 4 channels) • Short-circuit-proof • Wire break monitoring • Internal module diagnostics • Front connector required: 40-pin	6ES7331-7PF11-0AB0
6 inputs in 6 channel groups **Redundancy optional** (channel-granular redundancy) • Resolution 15 bit + sign • Electrical isolation up to 250 V AC between the channels • Measuring mode (temperature or voltage) and measuring range adjustable per channel • Temperature measurement with thermocouple type B, C, N, E, R, S, J, L, T, K, U, TxK/ XK (L); internal compensation; external compensation possible with Pt100 • Voltage measurement 25 mV, ±50 mV, ±80 mV, ±250 mV, ±500 mV, ±1 V • Input impedance 10 MΩ each • Programmable diagnostics and diagnostics alarm • Programmable process alarm on limit violation • Calibration possible using SIMATIC PDM • Front connector required: 40-pin	6ES7331-7PE10-0AB0

© Siemens AG 2024

Selection and ordering data (continued)

Analog output modules

SM 332 modules for current and voltage outputs	
2 outputs in 2 channel groups • Resolution 12 bit/11 bit + sign • Voltage 1 ... 5 V, 0 ... 10 V; ±10 V (2 channels; 2 or 4 wires) • Current 0/4 ... 20 mA; ±20 mA (2 channels; 2 wires) • Configurable substitute value output in case of CPU stop • Wire break monitoring (only for current) • Short circuit monitoring (only for voltage) • Internal module diagnostics • Front connector required: 20-pin	**6ES7332-5HB01-0AB0**
4 outputs in 4 channel groups **Redundancy optional** (channel-granular redundancy) • Resolution 12 bit/11 bit + sign • Voltage 1 ... 5 V, 0 ... 10 V, ±10 V (4 channels; 4 wires) • Current 0/4 ... 20 mA; ±20 mA (4 channels; 2 wires) • Configurable substitute value output in case of CPU stop • Wire break monitoring (only for current) • Short circuit monitoring (only for voltage) • Internal module diagnostics • Front connector required: 20-pin	**6ES7332-5HD01-0AB0**
8 outputs in 8 channel groups **Optional redundancy** (channel-granular redundancy) • Resolution 12 bit/11 bit + sign • Voltage 1 ... 5 V, 0 ... 10 V, ±10 V (8 channels; 4 wires) • Current 0/4 ... 20 mA; ±20 mA (8 channels; 2 wires) • Configurable substitute value output in case of CPU stop • Wire break monitoring (only for current) • Short circuit monitoring (only for voltage) • Internal module diagnostics • Front connector required: 40-pin	**6ES7332-5HF00-0AB0**
4 outputs in 4 channel groups • Resolution 14/15/16 bit • Voltage 1 ... 5 V, 0 ... 10 V, ±10 V (4 channels; 4 wires) • Current 0/4 ... 20 mA; ±20 mA (4 channels; 2 wires) • Configurable substitute value output in case of CPU stop • Isolated by channel • Internal module diagnostics • Front connector required: 20-pin	**6ES7332-7ND02-0AB0**

© Siemens AG 2024

Overview

The modules with HART which can be used in ET 200M remote I/O stations (with IM 153-2 High Feature interface module) permit connection of HART devices to the SIMATIC PCS 7 automation system.

Transmitters and HART actuators that are certified for digital communication with the HART protocol can be connected through these modules.

With 0/4 to 20 mA technology, conventional transmitters/actuators without HART protocol can also be connected.

All modules with HART come with diagnostics capability (channel and module diagnostics). The diagnostics and monitoring functions are directly available in SIMATIC PCS 7. They require no additional engineering. Plain text messages output on the operator station provide information on faults or changes in the HART parameter settings.

Homogenous integration in the SIMATIC Process Device Manager (PDM) and the PCS 7 Asset Management permit intuitive online diagnostics and parameterization of all connected field devices from a central position.

Function

HART is a serial transmission procedure with which additional parameter data such as measuring ranges, attenuation etc. can be sent to transmitters and actuators over a 4 to 20-mA current loop. The HART jobs for each channel can be remotely initiated over the PROFIBUS DP. This usually takes place from the central engineering system of the SIMATIC PCS 7 process control system per SIMATIC PDM.

The modules with HART have the following features:

- Connections compatible with the conventional analog modules of the ET 200M
- Additional communications possibility over the current loop
- Up to 8 analog channels per module (2 analog channels with Ex modules; 6 analog channels with safety-related SM 336 F-AI HART module)
- Each channel is a primary master of the HART protocol
- Selectable input range per channel (AI):
  - 0 to 20 mA (without HART function)
  - ± 20 mA (without HART function, not with Ex module or SM 336 F-AI HART module)
  - 4 to 20 mA (with/without HART function)
- Selectable output range per channel (AO):
  - 0 to 20 mA (with/without HART function; in the case of Ex module, only without HART function)
  - 4 to 20 mA (with/without HART function)

Additional functions of the 6ES7331-7TF01-0AB0 and 6ES7332-8TF01-0AB0 HART analog modules:

- Supplementary HART variables (up to 4 per channel, up to 8 per module) allow the transmission of additional values from/to the HART devices
- Modules can be used redundant (channel-granular redundancy)

Additional functions of the SM 336 F-AI HART module:

- Modules can be used redundant (channel-granular redundancy)
- HART communication can be activated safety-related in online mode, or switched off

Parameterization

- For the analog input modules (AI), it is possible to parameterize e.g. conversion time, input range, limits, alarms, smoothing of measured values
- For the analog output modules (AO), it is possible to parameterize e.g. output range, response on stoppage of AS (CPU), diagnostics
- Remote parameterization (per PROFIBUS DP) of the HART transmitters and actuators with SIMATIC PDM
- It is still possible to parameterize the HART devices using an operator terminal (handheld).

© Siemens AG 2024

Selection and ordering data

Analog input module SM 331 HART Redundancy optional (channel-granular redundancy) 8 inputs, 0/4 ... 20 mA or ±20 mA • Resolution: 15 bit + sign • Connection of 2-wire or 4-wire transmitters possible • HART (2-wire or 4-wire) • Wire break monitoring • Short-circuit-proof • Front connector required: 20-pin	**6ES7331-7TF01-0AB0**
Analog output module SM 332 HART Redundancy optional (channel-granular redundancy) 8 outputs, 0/4 ... 20 mA • Resolution: 15 bit + sign • For 2-wire actuators • HART (2-wire) • Wire break monitoring • Front connector required: 20-pin	**6ES7332-8TF01-0AB0**
SM 331 HART Ex analog input module [EEx ib] 2 inputs, 0/4 ... 20 mA in 2 channel groups, as of HART revision 5.0 • Individual electrically isolated channels • Resolution: 15 bit + sign • Connection of 2-wire or 4-wire transmitters possible • Wire break monitoring • Short-circuit-proof • HART (2-wire or 4-wire) • Front connector required: 20-pin	**6ES7331-7TB10-0AB0**
SM 332 HART Ex analog output module [EEx ib] 2 outputs, 0/4 ... 20 mA in 2 channel groups, as of HART revision 5.0 • Individual electrically isolated channels • Resolution: 12 bit + sign • For 2-wire actuators • Wire break monitoring • HART • Front connector required: 20-pin	**6ES7332-5TB10-0AB0**
SM 336 F-AI HART safety-related analog input module Redundancy optional (channel-granular redundancy) 6 inputs, 0/4 ... 20 mA	For detailed ordering data, see the section "F digital/analog modules"

© Siemens AG 2024

Technical specifications

Article number	6ES7332-8TF01-0AB0	6ES7332-5TB10-0AB0
Supply voltage		
• Load voltage L+		
• Rated value (DC)	24 V	24 V
Input current		
from load voltage L+ (without load), max.	350 mA	150 mA
from backplane bus 5 V DC, max.	110 mA	100 mA
Power loss		
Power loss, typ.	6 W	3.5 W
Analog outputs		
Number of analog outputs	8	2
Current output, no-load voltage, max.	24 V	19 V
Cycle time (all channels) max.		5 ms
• Output ranges, current		
• 0 to 20 mA	Yes	Yes
• -20 mA to +20 mA	No	No
• 4 mA to 20 mA	Yes	Yes
• Connection of actuators		
• for current output two-wire connection	Yes	Yes
• Load impedance (in rated range of output)		
• with current outputs, max.	750 Ω	650 Ω
• with current outputs, inductive load, max.	10 mH	7.5 mH
• Cable length		
• shielded, max.	800 m	400 m
Analog value generation for the outputs		
• Integration and conversion time/resolution per channel		
• Resolution with overrange (bit including sign), max.	16 bit	12 bit; + sign
• Conversion time (per channel)		40 ms
• Basic execution time of the module (all channels released)	10 ms; 10 ms in AO mode 50 ms in HART-AO mode	
• Settling time		
• for resistive load	0.1 ms	2.5 ms
• for capacitive load		4 ms
• for inductive load	0.5 ms	2.5 ms
Errors/accuracies		
• Operational error limit in overall temperature range		
• Current, relative to output range, (+/-)	0.2 %	0.55 %
• Basic error limit (operational limit at 25 °C)		
• Current, relative to output range, (+/-)	0.1 %	0.15 %
Interrupts/diagnostics/status information		
Diagnostics function	Yes	Yes; Parameterizable
• Alarms		
• Diagnostic alarm	Yes	Yes; Parameterizable
Ex(i) characteristics		
Module for Ex(i) protection		Yes
• maximum values for connecting terminals for gas group IIC		
• Uo (no-load voltage), max.		19 V
• Io (short-circuit current), max.		66 mA
• Po (power output), max.		506 mW
• Co (permissible external capacity), max.		230 nF
• Lo (permissible external inductivity), max.		7.5 mH
• Um (voltage at non-intrinsically safe connecting terminals), max.		60 V; DC

© Siemens AG 2024

Technical specifications (continued)

Article number	6ES7332-8TF01-0AB0	6ES7332-5TB10-0AB0
Degree and class of protection		
IP degree of protection	IP20	IP20
Standards, approvals, certificates		
FM approval		Yes
• Use in hazardous areas		
• ATEX marking		ATEX II 3 G (2) GD Ex nA [ib Gb] [ib IIIC Db] IIC T4 Gc
• FM marking		Class I, Division 2, Group A, B, C, D T4; Class I, Zone 2, Group IIC T4
Ambient conditions		
• Ambient temperature during operation		
• max.		60 °C
connection method / header		
required front connector	20-pin	20-pin
Dimensions		
Width	40 mm	40 mm
Height	125 mm	125 mm
Depth	117 mm	120 mm
Weights		
Weight, approx.	220 g	290 g

© Siemens AG 2024

Overview

The following analog and digital input and output modules are suitable for use in hazardous plants. They separate the non-intrinsically safe electrical circuits of the automation system and the intrinsically safe electrical circuits of the process. Sensors and actuators suitable for placing in zone 1 or 21 and 2 or 22 hazardous areas as well as intrinsically safe equipment compliant with DIN 50020 and [EEx ib] IIC can be operated on these modules.

All Ex modules come with diagnostics capability (channel and module diagnostics).

If hazardous area modules are marked as being capable of redundancy (6ES7321-7RD00-0AB0, 6ES7322-5SD00-0AB0, 6ES7331-7RD00-0AB0, 6ES7332-5RD00-0AB0), they can also be operated redundantly in non-hazardous areas.

Selection and ordering data

Ex digital input modules	
4 NAMUR inputs in 4 channel groups **Redundancy optional** (channel-granular redundancy) • Voltage supply to sensors 8.2 V • Individual electrically isolated channels • Time stamping in association with IM 153-2 High Feature, accuracy 10 ms, rising or falling edge, can be configured channel-granular • Wire break and short-circuit monitoring (directly at the contact for contacts with external resistor circuit) • Internal module diagnostics • Front connector required: 20-pin	**6ES7321-7RD00-0AB0**
Ex digital output modules	
4 outputs, 24 V DC, 10 mA in 4 channel groups **Redundancy optional** (channel-granular redundancy) • Individual electrically isolated channels • Wire break monitoring • Short-circuit monitoring • Internal module diagnostics • Front connector required: 20-pin	**6ES7322-5SD00-0AB0**
4 outputs, 15 V DC / 20 mA in 4 channel groups • Individual electrically isolated channels • Wire break monitoring • Short-circuit monitoring • Internal module diagnostics • Front connector required: 20-pin	**6ES7322-5RD00-0AB0**
Ex analog input modules	
4 inputs, 0/4 ... 20 mA in 4 channel groups **Redundancy optional** (channel-granular redundancy) • Individual electrically isolated channels • Resolution 15 bit + sign • Connection of 2-wire or 4-wire transmitters possible • Wire break monitoring • Measurement range monitoring • Short-circuit-proof • Internal module diagnostics • Front connector required: 20-pin	**6ES7331-7RD00-0AB0**

© Siemens AG 2024

Selection and ordering data (continued)

8 inputs in 4 channel groups • Resolution 15 bit + sign • Thermocouples type T, U, E, J, L, K, N, R, S, B (8 channels) Internal compensation; external compensation with Pt100 (2 channels), compensating box or 0/50 °C cold junction • Resistance thermometer Pt100, Pt200, Ni100 (4 channels; 2-wire or 4-wire, 3-wire Pt100 on request) • Wire break monitoring • Internal module diagnostics • Front connector required: 20-pin Note: A special front connector for the Ex analog input module 6ES7331-7SF00-0AB0 enables greater accuracy when making thermocouple temperature measurements in "Internal compensation" measuring mode (see the section "Accessories").	**6ES7331-7SF00-0AB0**
Ex analog output modules	
4 outputs, 0/4 ... 20 mA in 4 channel groups **Redundancy optional** (channel-granular redundancy) • Individual electrically isolated channels • Resolution 15 bit • For 2-wire transmitters • Wire break monitoring • Internal module diagnostics • Front connector required: 20-pin	**6ES7332-5RD00-0AB0**

For additional Ex modules, refer to the "Analog modules with HART" section.

© Siemens AG 2024

Technical specifications

Article number	6ES7322-5SD00-0AB0	6ES7322-5RD00-0AB0
Supply voltage		
• Load voltage L+		
• Rated value (DC)	24 V	24 V
Input current		
from load voltage L+ (without load), max.	160 mA	160 mA
from backplane bus 5 V DC, max.	85 mA	85 mA
Power loss		
Power loss, typ.	3 W	3 W
Digital outputs		
Number of digital outputs	4	4
Short-circuit protection	Yes; Electronic	Yes; Electronic
• Load resistance range		
• upper limit	390 Ω; Two-wire connection	200 Ω; Two-wire connection
• Output voltage		
• Rated value (DC)	24 V	15 V
• Switching frequency		
• with resistive load, max.	100 Hz	100 Hz
Interrupts/diagnostics/status information		
Diagnostics function	Yes	Yes
Ex(i) characteristics		
Module for Ex(i) protection	Yes	Yes
• maximum values for connecting terminals for gas group IIC		
• Uo (no-load voltage), max.	25.2 V	15.75 V
• Io (short-circuit current), max.	70 mA	85 mA
• Po (power output), max.	440 mW	335 mW
• Co (permissible external capacity), max.	90 nF	500 nF
• Lo (permissible external inductivity), max.	6.7 mH	5 mH
Standards, approvals, certificates		
• Use in hazardous areas		
• ATEX marking	[EEx ib] IIC	[EEx ib] IIC
• FM marking	AIS CL.1, DIV 1, GP A, B, C, D; CL.I, DIV 2, GP A, B, C, D T4	AIS CL.1, DIV 1, GP A, B, C, D; CL.I, DIV 2, GP A, B, C, D T4
• Test number PTB	Ex-96.D.2093X	Ex-96.D.2102X
Ambient conditions		
• Ambient temperature during operation		
• max.	60 °C	60 °C
connection method / header		
required front connector	20-pin	20-pin
Dimensions		
Width	40 mm	40 mm
Height	125 mm	125 mm
Depth	120 mm	120 mm
Weights		
Weight, approx.	230 g	230 g

Article number	6ES7332-5RD00-0AB0
Supply voltage	
• Load voltage L+	
• Rated value (DC)	24 V
Input current	
from load voltage L+ (without load), max.	200 mA
from backplane bus 5 V DC, max.	80 mA

© Siemens AG 2024

Technical specifications (continued)

Article number	6ES7332-5RD00-0AB0
Power loss	
Power loss, typ.	4 W
Analog outputs	
Number of analog outputs	4
Voltage output, short-circuit protection	Yes
Voltage output, short-circuit current, max.	70 mA
Current output, no-load voltage, max.	14 V
• Output ranges, current	
• 0 to 20 mA	Yes
• 4 mA to 20 mA	Yes
• Load impedance (in rated range of output)	
• with current outputs, max.	500 Ω
• Cable length	
• shielded, max.	200 m
Analog value generation for the outputs	
• Integration and conversion time/resolution per channel	
• Resolution with overrange (bit including sign), max.	15 bit
Errors/accuracies	
• Operational error limit in overall temperature range	
• Current, relative to output range, (+/-)	0.55 %
• Basic error limit (operational limit at 25 °C)	
• Current, relative to output range, (+/-)	0.2 %
Interrupts/diagnostics/status information	
Diagnostics function	Yes
Ex(i) characteristics	
Module for Ex(i) protection	Yes
• maximum values for connecting terminals for gas group IIC	
• Uo (no-load voltage), max.	14 V
• Io (short-circuit current), max.	70 mA
• Po (power output), max.	440 mW
• Co (permissible external capacity), max.	850 nF
• Lo (permissible external inductivity), max.	6.6 mH
Standards, approvals, certificates	
• Use in hazardous areas	
• ATEX marking	[EEx ib] IIC
• FM marking	Class I, Division 2, Group A, B, C, D T4
• Test number PTB	Ex-96.D.2026X
Ambient conditions	
• Ambient temperature during operation	
• max.	60 °C
connection method / header	
required front connector	20-pin
Dimensions	
Width	40 mm
Height	125 mm
Depth	120 mm
Weights	
Weight, approx.	280 g

© Siemens AG 2024

Overview

The safety functions of the safety-related automation systems are matched to the safety-related I/O modules (F-modules) of the ET 200M distributed I/O system. The F-signal modules (DI/DO/AI) in the ET 200M remote I/O stations comply with safety requirements up to SIL 3 (IEC 61508). They can diagnose both internal and external faults. To this end, they carry out self-tests, e.g. for short-circuit or open-circuit, and automatically monitor the discrepancy time defined in the parameter settings. They are able to guarantee plant safety even if there is a CPU failure in the automation system.

Depending on the version, the input modules support 1oo1 and 1oo2 evaluation on the module. 2oo3 evaluation of three sensors is possible using the corresponding voter block (component of the S7 F block library) within the safety program.

In the event of a faulty output, the digital output modules allow a safe shutdown via a second shutdown path.

Note:

The SM 326 F-DI NAMUR digital input module, Article No. 6ES7326-1RF01-0AB0, does not support PROFINET.

Design

SM 336 F-AI HART analog input module

The safety-oriented SM 336 F-AI HART analog input module has 6 inputs for current measurement in the range from 0 to 20 mA or 4 to 20 mA, all of which are designed for SIL 3. The compact width of 40 mm means that a relatively high packing density can be achieved for F-modules, allowing a design which saves space and costs.

The module can also handle HART communication with appropriate HART field devices. HART communication can be activated safety-oriented in online mode, or switched off.

Digital output module SM 326 F-DO

The 40-mm wide safety-oriented SM 326 F-DQ digital output module with 10 outputs (24 V DC, 2 A) and parameterizable redundancy extends the range of compact F-modules introduced with the SM 336 F-AI HART. The module features short response times, and can be used in SIL 3 applications even without a safety protector. It supports the "Keep last valid value" function as well as channel-selective passivation.

Selection and ordering data

SM 326 F-DI safety-oriented digital input module for floating contacts	
24 inputs, 24 V DC 80 mm wide Isolated in groups of 12 **Optional redundancy** (channel-granular redundancy) • 4 short-circuit-proof sensor power supplies, each for 6 channels, isolated in groups of 3 • External sensor power supply possible • SIL 2: 1oo1 evaluation, 24 channels • SIL 3: 1oo2 evaluation on the module, 12 channels (adjustable discrepancy time) • SIL 3 achievable without safety protector • Short-circuit monitoring to L+ • Discrepancy monitoring • Supports 20 ms time stamping (SOE) • Module internal diagnostics • PROFIsafe telegram • Front connector required: 40-pin	**6ES7326-1BK02-0AB0**
8 inputs, NAMUR [EEx ib][1)] 80 mm wide Isolated by channel • 8 short-circuit-proof sensor power supplies, each for 1 channel, mutually isolated • SIL 2: 1oo1 evaluation, 8 channels • SIL 3: 1oo2 evaluation on the module, 4 channels (adjustable discrepancy time) • Wire break and short-circuit monitoring (for contacts with external resistor circuit) • Discrepancy monitoring • Module internal diagnostics • PROFIsafe telegram • Front connector required: 40-pin	**6ES7326-1RF01-0AB0**
SM 326 F-DO safety-oriented digital output module Suitable for solenoid valves, DC contactors and indicator lights	
10 outputs, 24 V DC, 2 A 40 mm wide Isolated in groups of 5 (outputs with internal diode) **Optional redundancy** (channel-granular redundancy) • 10 outputs, isolated in groups of 5 • SIL 3 achievable without safety protector • Sourcing/sourcing output (for non-floating loads; ground and earth connected together) • Wire break and short-circuit monitoring • Configurable diagnostics • "Keep last valid value" parameter • Channel-selective passivation • PROFIsafe telegram • Front connector required: 40-pin	**6ES7326-2BF10-0AB0**

© Siemens AG 2024

Selection and ordering data (continued)

8 outputs, 24 V DC, 2 A 80 mm wide Electrically isolated in groups of 4 • SIL 2, SIL 3 configurable (8 channels) • SIL 3 achievable without safety protector • Sinking/sourcing output (for ungrounded loads; ground and earth separate) • Wire break and short-circuit monitoring • Module internal diagnostics • PROFIsafe telegram • Front connector required: 40-pin	6ES7326-2BF41-0AB0
SM 336 F-AI HART safety-oriented analog input module	
6 inputs, 0 ... 20 mA or 4 ... 20 mA 40 mm wide Electrically isolated in groups of 3 **Optional redundancy** (channel-granular redundancy) • Resolution: 15 bits + sign • 2-wire or 4-wire connection • 6 short-circuit-proof sensor supplies for 1 channel each • External sensor power supply possible • SIL 3: 1oo1 evaluation (6 channels) and 1oo2 evaluation (3 channels) on the module • SIL 3 achievable without safety protector • Discrepancy monitoring with 1oo2 evaluation (adjustable discrepancy time) • Wire-break monitoring • Module and channel diagnostics • HART communication in measuring range 4 ... 20 mA (can be switched on/off online) • HART status display • PROFIsafe telegram • Front connector required: 20-pin	6ES7336-4GE00-0AB0
Options	
Safety protector For F-modules, 40 mm wide • Isolation of F- and standard modules in an ET 200M rack • Signal isolation when using a copper bus connection (only F-modules in a rack with IM 153-2)	6ES7195-7KF00-0XA0
Isolating bus submodule 80 mm wide, for safety protector, when using an active backplane bus	6ES7195-7HG00-0XA0

1) The SM 326 F-DI NAMUR module does not support PROFINET

Options

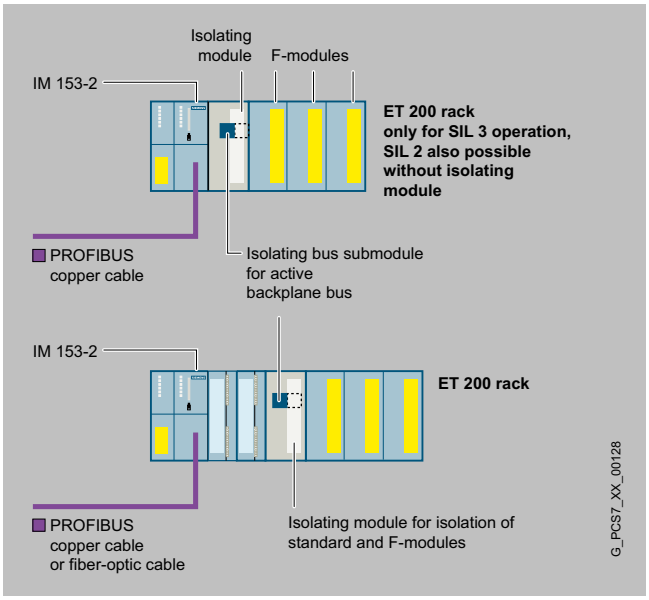

Safety protector

The following components are available as accessories for the F-modules:

- Safety protector
  - Isolation of F- and standard modules in an ET 200M remote I/O station
  - Signal isolation when using a copper bus connection (only F-modules in an ET 200M remote I/O station with IM 153-2)
- Isolating bus submodule for safety protector, when using an active backplane bus

The safety protector is required in SIL 3 applications with F-signal modules SM 326; AI 6 x 13 bit, SM 326; DI 8 x NAMUR and SM 326; DO 10 x DC 24 V/2 A (width 80 mm) in the following cases:

- Design of PROFIBUS DP with copper cables
- Design of PROFIBUS DP with fiber-optic cables and joint operation of the mentioned F-signal modules with standard modules in an ET 200M station

Note:

The safety protector for F-modules and the isolating bus submodule can only be used together. The 40-mm wide gap cannot be used for other modules.

© Siemens AG 2024

Overview

The FM 355 is an intelligent 4-channel controller module for universal control tasks. It can be used to control temperature, pressure and flow.

The following versions of the FM 355 are available:

- FM 355 C
  Continuous-action controller with 4 analog outputs for controlling analog actuators
- FM 355 S
  Step or pulse controller with 8 digital outputs for controlling motor-driven (integrating) actuators or binary controlled actuators (e.g. electrical heating strips and cartridges)
- FM 355-2 C/S
  Specially optimized for temperature controls with user-friendly online self-optimization integrated

Function

The FM 355 and FM 355-2 modules have four separate control channels. The controllers have the following features:

- Predefined controller structures for
  - Fixed setpoint control
  - Cascade controller
  - Ratio control
  - 3-component control
- Different operating modes
  - Automatic mode
  - Manual mode
  - Safety mode
  - Follow-up mode
  - Backup mode
- Sampling time (depending on the resolution of the analog inputs and the compensation input):
  - At 12 bits: 20 ms to 100 ms (FM 355-2 only)
  - At 14 bits: 100 ms to 500 ms (depending on the number of released analog inputs)
- 2 control algorithms:
  - Self-optimizing temperature control algorithm
  - PID algorithm
- Integrated online self-optimization without configuration (FM 355-2 only)
  - Faster adjustment to the operating point
- Convenient controller optimization
- Backup mode
  The controller can continue to control independently in the event of CPU failure or CPU stop. To this end, configurable safety setpoints or safety manipulated variables are set.
- Feed forward control
  The analog inputs can optionally be used for feed forward control in addition to actual value recording.

© Siemens AG 2024

Integration

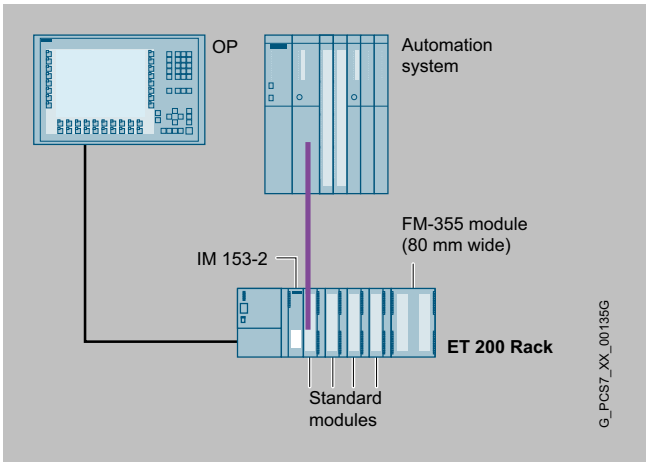

Use in SIMATIC PCS 7

The FM 355/FM 355-2 modules can be used to implement control tasks outside the SIMATIC PCS 7 automation system. The modules have not only controller structures but also analog and digital channels, thus eliminating the need for additional modules to detect the setpoint/actual value or to control the actuator.

On the one hand this reduces the work load for the CPU, on the other hand it enables backup mode with which the control system continues to work even if the CPU fails. In this case the FM 355 module can be operated further with an OP operator panel (does not apply to FM 355-2).

The operator panel is connected to the PROFIBUS DP fieldbus for this purpose. The CPU of the automation system can surrender input privilege to the operator panel in normal operation as well. The parameters that can be accessed with the operator panel are the setpoint and manipulated variable. If the FM 355 module is operated from the operator panel, the automation system reads back the values accessible from the operator panel after the input privilege is withdrawn or recovered again. Bumpless continuation of the operations is thus assured.

IM 153-2 High Feature interface modules are needed for the PROFIBUS DP connection when the FM 355/FM 355-2 controller modules are used in ET 200M.

SIMATIC PCS 7 blocks

CFC blocks with OS faceplates for all FM 355 modules are included in the scope of supply of the standard SIMATIC PCS 7 library (part of engineering software). These blocks are integrated into the SIMATIC PCS 7 driver concept. This guarantees homogenous system integration (including automatic diagnostics messages).

Parameterization in HW-Config

A configuration package containing all parameterization masks required for configuring, parameterizing and commissioning is included in the scope of supply of the FM 355 controller modules.

Selection and ordering data

FM 355 C controller module With 4 analog outputs for 4 continuous-action controllers Front connector required: 2 x 20-pin Incl. multi-lingual configuration package, manual and Getting Started (English, German, French, Italian) on CD-ROM	**6ES7355-0VH10-0AE0**
FM 355 S controller module With 8 digital outputs for 4 step or pulse controllers Front connector required: 2 x 20-pin Incl. multi-lingual configuration package, manual and Getting Started (English, German, French, Italian) on CD-ROM	**6ES7355-1VH10-0AE0**
FM 355-2 C temperature controller module with 4 analog outputs for 4 continuous-action controllers Front connector required: 2 x 20-pin Incl. multi-lingual configuration package, manual and Getting Started (English, German, French, Italian) on CD-ROM	**6ES7355-2CH00-0AE0**
FM 355-2 S temperature controller module With 8 digital outputs for 4 step or pulse controllers Front connector required: 2 x 20-pin Incl. multi-lingual configuration package, manual and Getting Started (English, German, French, Italian) on CD-ROM	**6ES7355-2SH00-0AE0**

Note:

In the case of the FM 355 C and FM 355 S controller modules, the channels are not electrically isolated from one another

© Siemens AG 2024

Overview

The FM 350-1 counter module is a single-channel intelligent counter module for simple counting tasks, suitable for the direct connection of incremental encoders. It provides a comparison function with 2 preselectable reference values, as well as integrated digital outputs for outputting a reaction upon reaching the reference value.

The FM 350-2 counter module is an eight-channel intelligent counter module for universal counting and measuring tasks, as well as for simple positioning jobs (max. 4 axes).

Selection and ordering data

FM 350-1 counter module Counting functions up to 500 kHz 1 channel for the connection of 5 V and 24 V incremental encoders Front connector required: 1 x 20-pin incl. configuration package on CD-ROM	**6ES7350-1AH03-0AE0**
FM 350-2 counter module 8 channels with maximum 20 kHz counting frequency; for 24 V encoders, for the following tasks: counting, frequency measurement, speed measurement, period measurement, dosing Front connector required: 1 x 40-pin incl. configuration package on CD-ROM	**6ES7350-2AH01-0AE0**

© Siemens AG 2024

Overview

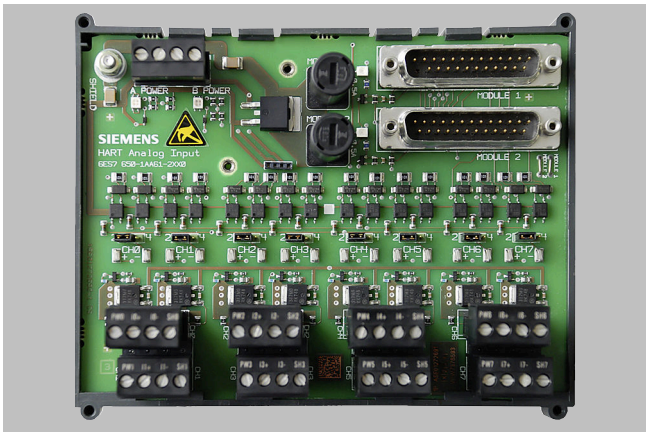

MTA AI HART terminal module, 8-channel

MTA terminal modules (Marshalled Termination Assemblies) can be used to connect field devices, sensors and actuators to the I/O modules of the ET 200M remote I/O stations simply, rapidly and reliably. They can be used to significantly reduce the costs and required work for cabling and commissioning, and prevent wiring errors.

The individual MTA terminal modules are each tailored to specific I/O modules from the ET 200M range (see design for assignment table). MTA versions are available for standard I/O modules as well as for redundant and safety-related I/O modules.

The MTA terminal modules are connected to the I/O modules using 3 m or 8 m long preassembled cables.

The MTA Power Supply 24 V DC terminal module comes with 16 24 V DC, 0.5 A outputs protected against short-circuit for redundant power supply of field devices that are no longer supplied by means of signal lines by some of the newer MTAS, for example 4-wire transmitters. If 0.5 A is insufficient, you can also connect two or more outputs in parallel.

© Siemens AG 2024

Design

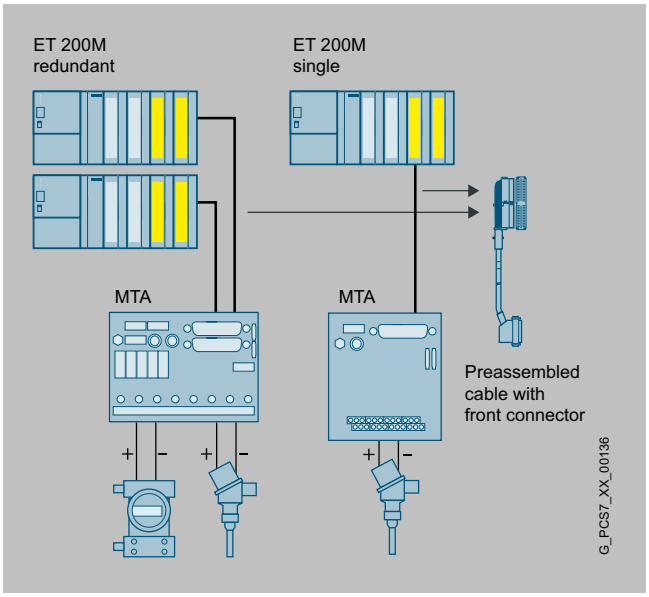

- MTA terminal modules in versions for standard, redundant and safety-related I/O modules of the ET 200M distributed I/O system
- Redundant 24 V DC supply
- Power Monitor Board for diagnostics of the redundant power supply (partially integrated or can be ordered as option)
- 3 or 8 m long preassembled cables for connecting MTA terminal module and ET 200M module, in each case with:
  - 50/25-contact Sub-D socket or 25-contact Sub-D plug, for connection to MTA terminal
  - 40/20-pole Siemens front connector, female version, for connection to ET 200M module
- Screw terminals for the 1:1 connection of field devices, sensors and actuators
- Protection of channels frequently by fuse or electronic current limitation, partially with LED display
- Test and release as SIMATIC PCS 7 system component with corresponding approvals (FM, UL, CE, ATEX, TÜV)

Product overview with information on combinable ET 200M modules and connection cables

MTA type	Input/output area	Order No. of MTA and accessories	Order No. of ET 200M module	Order No. of connecting cable	I/O redundancy
8 channels, AI	1 ... 5 V; ± 5 V; ± 10 V; 0 ... 20 mA; 4 ... 20 mA; ± 20 mA	6ES7 650-1AA52-2XX0[1)]	6ES7 331-7NF00-0AB0 (from product version 5)	6ES7 922-3BD00-0BA0 (3 m) 6ES7 922-3BJ00-0BA0 (8 m)	Yes
8 channels, AI	1 ... 5 V; ± 5 V; ± 10 V; 0 ... 20 mA; 4 ... 20 mA; ± 20 mA	6ES7 650-1AA52-2XX0[1)]	6ES7 331-7NF10-0AB0 (from product version 8)	6ES7 922-3BD00-0BB0 (3 m) 6ES7 922-3BJ00-0BB0 (8 m)	Yes
8 channels, AO	0 ... 20 mA; 4 ... 20 mA	6ES7 650-1AB51-2XX0	6ES7 332-5HF00-0AB0 (from product version 3)	6ES7 922-3BD00-0AS0 (3 m) 6ES7 922-3BJ00-0AS0 (8 m)	Yes
8 channels, AI HART	0 ... 20 mA (without use of HART) 4 ... 20 mA (with/without use of HART)	6ES7 650-1AA61-2XX0[1)]	6ES7 331-7TF01-0AB0	6ES7 922-3BD01-0AM0 (3 m) 6ES7 922-3BJ01-0AM0 (8 m)	Yes
8 channels, AO HART	0 ... 20 mA (with/without use of HART) 4 ... 20 mA (with/without use of HART)	6ES7 650-1AB61-2XX0	6ES7 332-8TF01-0AB0	6ES7 922-3BD01-0AM0 (3 m) 6ES7 922-3BJ01-0AM0 (8 m)	Yes
8 channels, AI TC	Thermocouple types B, C, N, E, R, S, J, L, T, K, U	6ES7 650-1AF51-2XX0	6ES7 331-7PF10-0AB0 (from product version 4) or 6ES7 331-7PF11-0AB0	6ES7 922-3BD00-0AS0 (3 m) 6ES7 922-3BJ00-0AS0 (8 m)	No
8 channels, AI RTD	Resistance thermometers Pt100, Pt200, Pt500, Pt1000, Ni100, Ni120, Ni200, Ni500, Ni1000, Cu10	6ES7 650-1AG51-2XX0	6ES7 331-7PF00-0AB0 (from product version 8) or 6ES7 331-7PF01-0AB0	6ES7 922-3BD00-0AS0 (3 m) 6ES7 922-3BJ00-0AS0 (8 m)	No
16 channels, DO	24 V DC, 0.5 A	6ES7 650-1AD11-2XX0	6ES7 322-8BH10-0AB0	6ES7 922-3BD00-0AT0 (3 m) 6ES7 922-3BJ00-0AT0 (8 m)	Yes
6 channels F-AI HART (safety-related)	0 ... 20 mA (without use of HART); 4 ... 20 mA (with/without use of HART)	6ES7 650-1AH62-5XX0[1)]	6ES7 336-4GE00-0AB0	6ES7 922-3BD00-0AU0 (3 m) 6ES7 922-3BJ00-0AU0 (8 m)	Yes

© Siemens AG 2024

Design (continued)

MTA type	Input/output area	Order No. of MTA and accessories	Order No. of ET 200M module	Order No. of connecting cable	I/O redundancy
16 channels, DI	24 V DC	6ES7 650-1AC11-3XX0	6ES7 321-7BH01-0AB0 (from product version 2)	6ES7 922-3BD01-0AM0 (3 m) 6ES7 922-3BJ01-0AM0 (8 m)	Yes
24 channels F-DI (safety-related)	24 V DC	6ES7 650-1AK11-7XX0	6ES7 326-1BK00-0AB0, 6ES7 326-1BK01-0AB0 or 6ES7 326-1BK02-0AB0	6ES7 922-3BD00-0AS0 (3 m) 6ES7 922-3BJ00-0AS0 (8 m)	Yes
10 channels F-DO (safety-related)	24 V DC, 2 A	6ES7 650-1AL11-6XX0	6ES7 326-2BF01-0AB0 (from product version 2) or 6ES7 326-2BF10-0AB0	6ES7 922-3BD00-0AN0 (3 m) 6ES7 922-3BJ00-0AN0 (8 m)	Yes
16 channels DO relay	120 ... 230 V AC, 5 A; 24 V DC, 5 A	6ES7 650-1AM30-3XX0	6ES7 322-8BH01-0AB0 or 6ES7 322-8BH10-0AB0	6ES7 922-3BD00-0AS0 (3 m) 6ES7 922-3BJ00-0AS0 (8 m)	Yes
10 channels F DO relays (safety-related)	120 ... 230 V AC, 5 A; 24 V DC, 5 A	6ES7 650-1AM31-6XX0	6ES7 326-2BF01-0AB0 (from product version 2) or 6ES7 326-2BF10-0AB0	6ES7 922-3BD00-0AS0 (3 m) 6ES7 922-3BJ00-0AS0 (8 m)	Yes

1) These new terminal modules can no longer deliver a 24 V DC current for feeding 4-wire transmitters. You require an additive terminal module MTA power supply 24 V DC (Order No. 6ES7 650-1BE10-3XX0) if you wish to continue supplying 4-wire transmitters centrally per MTA and redundant with 24 V DC.

© Siemens AG 2024

Selection and ordering data

MTA terminal modules for SIMATIC PCS 7	
MTA AI terminal module, 8-channel Terminal module for connection of field devices/sensors to a single or two redundant ET 200M analog input modules 6ES7331-7NF00-0AB0 or 6ES7331-7NF10-0AB0 Input range: 1 to 5 V; ± 5 V; ± 10 V und 0/4 ... 20 mA; ± 20 mA Note: 4-wire devices must be supplied separately with current.	6ES7650-1AA52-2XX0
MTA AO terminal module, 8-channel Terminal module for connection of field devices/actuators to a single or two redundant ET 200M analog output modules 6ES7332-5HF00-0AB0 Output range: 0/4 ... 20 mA	6ES7650-1AB51-2XX0
MTA AI HART terminal module, 8-channel Terminal module for connection of field devices/sensors to a single or two redundant ET 200M analog input modules 6ES7331-7TF01-0AB0 Input range: 0 ... 20 mA (without use of HART), 4 ... 20 mA (with/without use of HART) Note: 4-wire devices must be supplied separately with current.	6ES7650-1AA61-2XX0
MTA AO HART terminal module, 8-channel Terminal module for connection of field devices/actuators to a single or two redundant ET 200M analog output modules 6ES7332-8TF01-0AB0 Output range: 0 to 20 mA (with/without use of HART), 4 ... 20 mA (with/without use of HART)	6ES7650-1AB61-2XX0
MTA AI TC terminal module, 8-channel Terminal module for connection of field devices/sensors to a single ET 200M analog input module 6ES7331-7PF10-0AB0 or 6ES7331-7PF11-0AB0 Input range: Thermocouple types B, C, N, E, R, S, J, L, T, K, U	6ES7650-1AF51-2XX0
MTA AI RTD terminal module, 8-channel Terminal module for connection of field devices/sensors to a single ET 200M analog input module 6ES7331-7PF00-0AB0 or 6ES7331-7PF01-0AB0 Measuring range: Resistance thermometers Pt100, Pt200, Pt500, Pt1000, Ni100, Ni120, Ni200, Ni500, Ni1000, Cu10	6ES7650-1AG51-2XX0
MTA DO terminal module, 16-channel Terminal module for connection of field devices/actuators to a single or two redundant ET 200M digital output modules 6ES7322-8BH10-0AB0 Output range: 24 V DC, 0.5 A	6ES7650-1AD11-2XX0

Selection and ordering data (continued)

MTA F-AI HART terminal module, 6-channel Terminal module for connection of field devices/sensors to a single or two redundant safety-related ET 200M analog input modules 6ES7336-4GE00-0AB0 Input range: 0 ... 20 mA (without use of HART), 4 ... 20 mA (with/without use of HART) Note: 4-wire devices must be supplied separately with current.	6ES7650-1AH62-5XX0
MTA DI terminal module, 16-channel Terminal module for connection of field devices/sensors to a single or two redundant ET 200M digital input modules 6ES7321-7BH01-0AB0 Input range: 24 V DC	6ES7650-1AC11-3XX0
MTA F-DI terminal module, 24-channel Terminal module for connection of field devices/sensors to a single or two redundant safety-related ET 200M digital input modules 6ES7326-1BK00-0AB0, 6ES7326-1BK01-0AB0 or 6ES7326-1BK02-0AB0 Input range: 24 V DC	6ES7650-1AK11-7XX0
MTA F-DO terminal module, 10-channel Terminal module for connection of field devices/actuators to a single or two redundant safety-related ET 200M digital output modules 6ES7326-2BF01-0AB0 or 6ES7326-2BF10-0AB0 Output range: 24 V DC, 2A	6ES7650-1AL11-6XX0
MTA DO Relay terminal module, 16-channel Terminal module for connection of field devices/actuators to a single or two redundant ET 200M digital output modules 6ES7322-8BH01-0AB0 or 6ES7322-8BH10-0AB0 Output range: 120 to 230 V AC, 5 A; 24 V DC, 5 A	6ES7650-1AM30-3XX0
MTA F-DO Relay terminal module, 10-channel Terminal module for connection of field devices/actuators to a single or two redundant safety-related ET 200M digital output modules 6ES7326-2BF01-0AB0 or 6ES7326-2BF10-0AB0 Output range: 120 to 230 V AC, 5 A; 24 V DC, 5 A	6ES7650-1AM31-6XX0
Separate power supply for field devices, for example 4-wire transmitter	
MTA terminal module 24 V DC power supply, 16-channel Terminal module for the redundant power supply of field devices separated from the signal transmission Output range: 24 V DC, 0.5 A	6ES7650-1BE10-3XX0

© Siemens AG 2024

Selection and ordering data (continued)

Pre-assembled cable for connection of ET 200 module and MTA terminal module	
Connecting cable with 40-pin front connector for ET 200M and 50-pin Sub-D socket for MTA Lengths:	
• 3 m	6ES7922-3BD00-0AS0
• 8 m	6ES7922-3BJ00-0AS0
Connecting cable with 40-pin front connector for ET 200M and 25-pin Sub-D socket for MTA Lengths:	
• 3 m	6ES7922-3BD00-0BA0
• 8 m	6ES7922-3BJ00-0BA0
Connecting cable with 40-pin front connector for ET 200M and 25-pin Sub-D socket for MTA Lengths:	
• 3 m	6ES7922-3BD00-0BB0
• 8 m	6ES7922-3BJ00-0BB0
Connecting cable with 40-pin front connector for ET 200M and 25-pin Sub-D plug for MTA Lengths:	
• 3 m	6ES7922-3BD00-0AT0
• 8 m	6ES7922-3BJ00-0AT0
Connecting cable with 40-pin front connector for ET 200M and 25-pin Sub-D socket for MTA Lengths:	
• 3 m	6ES7922-3BD00-0AN0
• 8 m	6ES7922-3BJ00-0AN0
Connecting cable with 20-pin front connector for ET 200M and 25-pin Sub-D socket for MTA Lengths:	
• 3 m	6ES7922-3BD01-0AM0
• 8 m	6ES7922-3BJ01-0AM0
Connecting cable with 20-pin front connector for ET 200M and 50-pin Sub-D socket for MTA Lengths:	
• 3 m	6ES7922-3BD00-0AU0
• 8 m	6ES7922-3BJ00-0AU0
Accessories	
Power monitor board (PMB) for display of status of redundant MTA power supply	6ES7650-1BA02-0XX0

More information

Detailed information on the MTA terminal modules can be found in the manual "ET 200M Marshalled Termination Assemblies Remote I/O Modules".

© Siemens AG 2024

Overview

SIMATIC ET 200SP is a highly flexible and scalable I/O system with IP20 protection which can communicate with SIMATIC PCS 7 automation systems (controllers) via PROFINET IO or PROFIBUS DP. Designed for installation in enclosures or control cabinets, it convinces with a particularly compact design, exceptional usability, and impressive performance.

The comprehensive, channel-specific and easy-to-program diagnostics with plain text messages means that faults can be located and eliminated in an extremely short time.

Summary of main features

- Remote I/O stations with IP20 protection, can be networked via PROFINET IO and PROFIBUS DP
- Free selection of PROFINET connection system and hardware using BusAdapter (BA 2×RJ45, BA 2×FC, BA 2×SCRJ, BA 2xLC, BA LC/FC, BA LC/RJ45, BA SCRJ/RJ45 or BA SCRJ/FC)
- System redundancy S2: ET 200SP station can establish communication to each of the two CPUs of an AS redundancy station via an interface module
- >Up to 64 I/O modules (digital/analog); full data volume up to 1 440 bytes (with S2 system redundancy to 1 000 bytes)
- Compact, rugged, and easy-to-service design with permanent wiring:
  - Shielded backplane bus, designed as module rack using BaseUnits
  - Push-in terminals for quick, one-handed wiring without the use of tools
  - Excellent accessibility of terminals arranged in rows
  - I/O module and terminal box can be replaced during operation (hot swapping)
  - Automatic coding of the I/O modules prevents destruction of the electronics due to faulty equipping
  - Simple retrofitting of modules at the station end without reconfiguration
  - Unambiguous inscription and color concept helps avoid faults
  - Consistent shielding of conductor via terminal box and backplane bus to the PROFINET cable
  - Low space requirement allows high packing density in the control cabinet
- Significant system functions

Overview (continued)

- Self-assembling potential groups without external wiring or jumpers
- Individual load groups can be formed without extra power modules
- Partial commissioning: Tolerating of gaps in the design through reservation of slots for further configuration
- Electronic rating plate (I&M data 0...3)
- Extensive diagnostics, channel-specific

Design

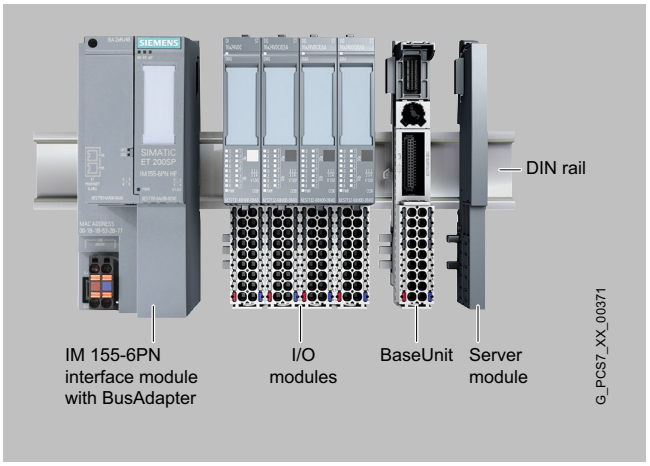

ET 200SP for SIMATIC PCS 7, design

Main components of the SIMATIC ET 200SP distributed I/O system

- PROFINET IM 155-6PN/2 High Feature interface module
  with BusAdapter (separate component for establishing the connection system) for communication with the SIMATIC PCS 7 automation system (controller) via PROFINET IO
- PROFIBUS IM 155-6DP High Feature interface module
  is used as DP slave on PROFIBUS DP and connects the ET 200SP with the DP master
- I/O modules
  4, 8 or 16 digital channels (DI, DQ, RQ) and 2, 4 or 8 analog channels (AI, AQ); up to 64 I/O modules can be plugged into passive BaseUnits in any combination
- BaseUnits
  Supports for the plug-in I/O modules and the terminal box; for construction of the backplane bus and for the mechanical/electrical connections
- Server module
  for connection of ET 200SP station
- DIN rail
  for latching-in of interface module, BaseUnits and server module; for installation of ET 200SP station in control cabinet

The extremely compact design allows a high packing density. With a depth of approx. 75 mm, the overall height is e.g.:

© Siemens AG 2024

Design (continued)

- 117 mm with 16 channels and 1-wire connection (without AUX terminals)
- 141 mm with 8 channels and 3-wire connection and AUX terminals

Replaceable BusAdapters enable free selection of the PROFINET connection system.

The BaseUnits mounted on a DIN rail can already be wired and tested prior to connection of the I/O modules (permanent wiring).

Hot swapping of the I/O modules and terminal boxes plugged onto the BaseUnits is possible. Mechanical coding prevents the use of an incorrect slot and the resulting destruction of the module electronics.

A BU cover is available for reserved, unequipped slots (BaseUnit without I/O module) as protection for the BaseUnit connectors. It can be provided with a reference ID label.

For connection of cable shields that is both space-saving and optimized in terms of EMC, a shield connection is available that is quick and easy to mount. This consists of a shield connection element that can be plugged onto the BaseUnit and a shield terminal.

An inscription and color identification system with the following components facilitates orientation:

- Labeling strips for insertion in interface and I/O modules (foil on rolls for thermal transfer printers or pre-perforated A4 size paper for laser printers)
- Color-coded labels for cable assignment and identification of I/O module potentials
- Equipment labeling plates for interface module, BusAdapter, BaseUnits and I/O modules for identifying system components

Installation

Installation of an ET 200SP station is quick and easy:

- Latching-in of interface module, BaseUnits and server module on a DIN rail (35 x 15 × 7.5 mm or 35 × 15 × 15 mm)
- Connection of the cables for the 24 V DC power supply on the interface module
- Plugging on and screwing tight the BusAdapter
- Prewiring of the 24 V DC power supply and process signal cables on the BaseUnits
- Plugging on the I/O modules

The ET 200SP station can be installed in any orientation in an enclosure or control cabinet. The preferred position is horizontal.

Configuration limits and guidelines

- PROFINET IO: up to 64 I/O modules (digital/analog); full data volume up to 1 440 bytes (with S2 system redundancy up to 1 000 bytes)
- PROFIBUS DP: up to 32 I/O modules; up to 244 bytes of user data
- The thermal continuous current for the load or encoder supply can be a maximum of 10 A per potential group.

Technical specifications

Selected technical specifications of the ET 200SP in the context of SIMATIC PCS 7:

Design	
Degree of protection	IP20
Design	Discretely scalable
Installation	DIN rail (standard mounting rail)
Connection system for sensors/actuators	Single-conductor or multi-conductor connection; push-in terminals
Power supply	
Rated voltage	24 V DC; tolerance range: 19.2 ... 28.8 V DC (static); 18.5 ... 30.2 V DC (dynamic)
Relevant properties	
Safety engineering	No
For use in hazardous areas	Zones 2, 22
Increased availability	No (can be operated on the redundant automation system using system redundancy S2)
Temperature range	
• Horizontal installation	0 ... +60 °C[1)]
• Vertical installation	0 ... +50 °C[1)]
Resistance to vibration	Up to 1 g with BA 2×RJ45; up to 5 g with BA 2×FC
System functions	
Permanent wiring	Yes
Hot swapping	Yes
Expansion/configuration during ongoing operation	No
Diagnostics (module-dependent)	Channel-discrete
Functions	
Digital channels	Yes
Analog channels	Yes
HART	Yes
Motor starters	No
Pneumatic connection	No
Technological functions	No
Approvals, standards	
• CE for industrial applications	According to 94/9/EC, 2004/108/EC and 2006/95/EC
• Interference emission	EN 61000-6-4:2007
• Noise immunity	EN 61000-6-2:2005
• ATEX in accordance with EN 60079-15 and EN 60079-0	II 3 G Ex nA IIC Tx Gc DEKRA 12ATEX0038X
• IECEx in accordance with EN 60079-15 and EN 60079-0	Ex nA IIC Tx Gc IECEx DEK 13.0011X
• AS/NZS for Australia and New Zealand	AS/NZS CISPR 16
• cULus in accordance with UL 508, CSA C22.2 No. 142 and No. 213, ANSI/ISA 12.12.01	Class I, Division 2, Groups A, B, C, D, Tx Class I, Zone 2, Group IIC Tx
• PROFIBUS	IEC 61784-1:2010 Ed3 CP 3/1
• IEC	IEC 61131-2
• CE	According to 94/9/EC, 2004/108/EC and 2006/95/EC
• CCC	Certificate for China Compulsory Product Certification

© Siemens AG 2024

Technical specifications (continued)

• KCC	Korean Certification KCC-REM-S49-ET200SP
• Shipbuilding approval	Classification companies • ABS (American Bureau of Shipping) • BV (Bureau Veritas) • DNV (Det Norske Veritas) • GL (Germanischer Lloyd) • LRS (Lloyds Register of Shipping) • Class NK (Nippon Kaiji Kyokai)

[1]) Also available in a SIPLUS version for extended temperature range (up to -40 ... +70 °C) and aggressive atmosphere/condensation (for details, see http://www.siemens.com/siplus and catalog ST 70).
For a large number of components of the ET 200SP distributed system, the ambient temperature range during operation is extended to -30 °C (without condensation or icing) in all mounting positions. The permissible installation elevation for some modules has also been extended to installation altitudes up to 5,000 m. For details, see https://support.industry.siemens.com/cs/ww/en/view/109767369

For detailed technical specifications, especially on individual components such as interface modules, BaseUnits or I/O modules, see:

- Catalog ST 70, section "IO Systems"
- Industry Mall under "Automation technology - Automation systems - SIMATIC industrial automation systems - IO systems - SIMATIC ET 200 systems for control cabinets – SIMATIC ET 200SP"
- SIMATIC ET 200SP Manual Collection:
  https://support.industry.siemens.com/cs/ww/en/view/84133942

More information

General information

http://www.siemens.com/et200sp

TIA Selection Tool

Note:

When working with the TIA Selection Tool in the context of SIMATIC PCS 7, please note the specified limitations for the ET 200SP in the "SIMATIC ET 200SP for SIMATIC PCS 7" section with regard to area of application and product range.

http://www.siemens.com/tia-selection-tool

© Siemens AG 2024

Overview

PROFINET IM 155-6PN High Feature interface module, with equipment labeling plate

PROFINET IM 155-6PN/2 High Feature interface module

- Interface module for connecting the ET 200SP station to PROFINET IO
- 24 V DC supply for interface module and backplane bus
- Integrated 2-port switch for line configuration
- Handling of complete data transfer with the controller
- Data exchange with the I/O modules via the backplane bus
- Support of identification data I&M0 to I&M3
- Delivery including server module
- BusAdapter with integrated 2-port switch for individual selection of the PROFINET IO connection system can be ordered separately

PROFIBUS IM 155-6DP High Feature interface module

- Max. 32 I/O modules, also PROFIsafe modules with complete diagnostic support
- Max. 244 bytes in each case for input and output data per module and per station
- Data update time: Typ. 5 ms
- PROFIBUS connection via 9-pin sub-D socket
- Bundle including server module and PROFIBUS plug

Overview (continued)

BA 2×RJ45 BusAdapter

BusAdapters (BA)

A BusAdapter can be used to adapt the universal PROFINET IO interface of the interface module to the specific requirements of the environment of use. If a connection socket is faulty or when changing the connection system at a later stage, it is only necessary to replace the BusAdapter.

The following BusAdapters are available:

- **BA 2×RJ45**
  With two sockets for commercially available RJ45 plugs; suitable for standard applications with moderate mechanical strength and EMI resistance
- **BA 2×FC**
  With two FastConnect terminals for direct connection of the bus cables; suitable for applications with higher mechanical strength and/or EMC resistance (5x higher resistance against vibrations and EMC)
- **BA 2×SCRJ**
  With two optical PROFINET interfaces for connection of optical-fiber cables via SC RJ plug-in connectors (5x higher resistance against vibrations and EMC; PROFINET cable lengths between two stations up to 300 m)
- **BA 2×LC**
  With two optical PROFINET interfaces for connecting fiber-optic cables LC multimode glass-fiber
- **BA LC/RJ45**
  With two PROFINET interfaces:
  - 1 × optical, for connection of fiber-optic cables via LC multimode fiber-optic cable (port 1)
  - 1 × electrical, for connection of bus cable with standard RJ45 plug (port 2)
- **BA LC/FC**
  With two PROFINET interfaces:
  - 1 × optical, for connection of fiber-optic cables via LC multimode fiber-optic cable (port 1)
  - 1 × electrical, for direct connection of FastConnect bus cable (port 2)

© Siemens AG 2024

Overview (continued)

- **BA SCRJ/RJ45**
  With two PROFINET interfaces:
  - 1 × optical, for connection of fiber-optic cables via SC RJ connectors (port 1)
  - 1 × electrical, for connection of bus cable with standard RJ45 plug (port 2)
- **BA SCRJ/FC**
  With two PROFINET interfaces (5x higher resistance against vibrations and EMC):
  - 1 × optical, for connection of fiber-optic cables via SC RJ connectors (port 1)
  - 1 × electrical, for direct connection of FastConnect bus cable (port 2)

Design

The IM 155-6PN/2 High Feature interface module is snapped directly onto the DIN rail.

Device features:

- Diagnostics displays for errors (ERROR), Maintenance (MAINT), operation (RUN) and power supply (PWR) as well as one link LED per port
- Optional inscription with labeling strips (light gray), available as:
  - Roll for thermal transfer continuous feed printer with 500 strips each
  - Paper sheets for laser printer, A4 format, with 100 strips each
- Optional equipping with a reference ID label

The selected BusAdapter is simply plugged onto the interface module and secured with a screw. It can be equipped with a reference ID label.

Selection and ordering data

PROFINET IM 155-6PN/2 High Feature interface module Including server module, without BusAdapter	6ES7155-6AU01-0CN0
PROFIBUS IM 155-6DP High Feature interface module Bundle comprising interface module, server module and PROFIBUS plug	6ES7155-6BA01-0CN0
Accessories	
BA 2×RJ45 BusAdapter 2 × RJ45 connection for PROFINET	6ES7193-6AR00-0AA0
BA 2×FC BusAdapter 2 × FastConnect (FC) connection for PROFINET	6ES7193-6AF00-0AA0
BA 2×SCRJ BusAdapter 2 × SCRJ FO connection for PROFINET	6ES7193-6AP00-0AA0
BA 2XLC BusAdapter 2 × glass fiber-optic cable connection for PROFINET	6ES7193-6AG00-0AA0
BA LC/RJ45 BusAdapter With media converter glass FOC - Cu; 1 x LC connection and 1 x RJ45 connection for PROFINET	6ES7193-6AG20-0AA0
BA LC/FC BusAdapter With media converter glass FOC - Cu; 1 × LC connection and 1 × FastConnect connection for PROFINET	6ES7193-6AG40-0AA0
BA SCRJ/RJ45 BusAdapter With media converter FOC-Cu; 1 × SCRJ FO and 1 × RJ45 connection for PROFINET	6ES7193-6AP20-0AA0
BA SCRJ/FC BusAdapter With media converter FOC-Cu; 1 × SCRJ FO and 1 × FastConnect connection for PROFINET	6ES7193-6AP40-0AA0
Equipment labeling plates 10 sheets of 16 labels	6ES7193-6LF30-0AW0
Labeling strips	
• 500 labeling strips on roll, light gray	6ES7193-6LR10-0AA0
• 1 000 labeling strips, A4 format, light gray	6ES7193-6LA10-0AA0
DIN rail 35 mm	
• Length: 483 mm for 19" cabinets	6ES5710-8MA11
• Length: 530 mm for 600 mm cabinets	6ES5710-8MA21
• Length: 830 mm for 900 mm cabinets	6ES5710-8MA31
• Length 2 m	6ES5710-8MA41
Spare parts	
Server module (spare part)	6ES7193-6PA00-0AA0
Power supply connector interface module (spare part) For 24 V DC supply	
• With push-in terminals (10 units)	6ES7193-4JB00-0AA0
• With screw-type terminals (10 units)	6ES7193-4JB50-0AA0

© Siemens AG 2024

Overview

BaseUnits

- Type A0 BaseUnits with 16 process terminals
  - Terminal box light
  - Terminal box light, with 10 additional AUX terminals (internally jumpered)
  - Terminal box dark
  - Terminal box dark, with 10 additional AUX terminals (internally jumpered)
- Type A1 BaseUnits for analog modules for temperature detection with 16 process terminals
  - Terminal box light
  - Terminal box light, with 2 × 5 internally jumpered add-on terminals
  - Terminal box dark
  - Terminal box dark, with 2 × 5 internally jumpered add-on terminals
- BaseUnit type B1 for digital input module, terminal box dark; 12 process terminals
- Type B0 BaseUnit for digital output module with relays, terminal box dark; 12 process terminals and 4 internally jumpered AUX terminals

I/O modules

- Digital I/O modules
  - Digital input modules, 4, 8 or 16 channels
  - Digital output modules, 4, 8 or 16 channels, including relay module
- Analog I/O modules
  - Analog input modules, 2, 4 or 8 channels
  - Analog output modules, 2 or 4-channel

Supplementary material

- BU cover
- Labeling strips
- Equipment labeling plates
- Color-coded labels
- Shield connection

Design

ET 200SP BaseUnit

BaseUnits

The I/O modules are plugged into BaseUnits (BU). Suitable BaseUnit versions include all those which correspond to the BU type (A0/A1/B0/B1/D0) of the selected I/O module.

The BaseUnits provide electrical and mechanical connections between the I/O modules. To this end, the BaseUnits are mounted on a standard rail and latched into each other from the side.

The module slot also has a position for a coding element. This automatically codes the I/O module type when it is inserted for the first time, and prevents any different type of module from being inserted.

Each BaseUnit has a replaceable terminal box. In addition to the process terminals, this has two terminals (L+ and M) for the 24 V DC supply for the I/O modules and sensors. The plug-in terminals are designed to be space-saving and easy to fit.

BaseUnits are available with light or dark terminal boxes. BaseUnits with a light terminal block (light BUs) separate the self-assembling voltage buses (P1, P2, and AUX) from the adjacent module on the left and thus open up a new load group. The 24 V DC supply for the I/O modules and sensors of this load group (max. thermal continuous load 10 A) is connected to P1 (+) and P2 (-) via the terminals at the bottom with red and blue spring NC contacts.

BaseUnits with dark terminal box (dark BUs) are connected onto the right of a light BU. Contrary to the light BUs, they link the voltage buses P1, P2 and AUX to the adjacent module on the left and thus extend the voltage group. A new power supply is therefore only necessary at the next light BU.

Certain BaseUnits additionally have internally jumpered AUX terminals. Potentials of up to 24 V DC or protective earth (PE) conductors can be connected to the AUX rails.

The BaseUnits of type A1 which can be connected to analog modules for temperature detection enable recording of the terminal temperature using an integrated sensor for automatic temperature compensation for thermocouples. These BaseUnits are also available with 2 × 5 add-on terminals (internally jumpered).

Supplementary material for I/O modules and BaseUnits

BU cover

Unequipped BaseUnit slots reserved for later use can be protected by a BU cover. A 15 or 20 mm wide BU cover must be selected depending on the type of BaseUnit. It can be provided with a reference ID label.

Labeling strips

Appropriate light gray labeling strips for insertion in I/O modules are available in two different materials:

© Siemens AG 2024

Design (continued)

- Roll for thermal transfer roll printer with 500 labeling strips each
- Paper sheets for laser printer, A4 format, with 100 labeling strips each

Equipment labeling plates

The reference ID labels delivered as a package comprising 10 sheets with 16 strips each are used to identify bus adapters and BaseUnits as well as interface and I/O modules. The labels suitable for printing with commercially available thermal transfer printers are easy to insert into the corresponding module.

Color-coded labels

To prevent wiring errors, the potentials at the terminals of the BaseUnits can be coded using color-coded labels. The color-coded labels are simply attached to the terminal box. The following versions are available:

- Module-specific color-coded labels for process terminals. Selection is made depending on the color code (CCxx) printed on the front of the I/O module. The color code CC00 means that a color-coded label is not available for the process terminals of this I/O module.
- Color-coded labels for the 10 AUX terminals of BaseUnit type A0 in red, blue, and yellow/green.
- Color-coded labels for the 2 × 5 add-on terminals of the BaseUnit type A1 in red/blue.
- Color-coded labels for the 4 AUX terminals of BaseUnits type B0 in red, blue, and yellow/green.

Shield connection

A shield connection that is quick and easy to mount, comprising a shield connection element (can be plugged into the BaseUnit) and a shield terminal, permit the connection of cable shields that is both space-saving as well as optimized in terms of EMC. The shielded cable is fixed to the shield connecting element by means of the shield terminal. The low-impedance connection to the functional ground (standard mounting rail) does not require any additional wiring by the user.

The shield connection is supplied as a package containing 5 shield connection elements and 5 shield terminals.

Selection and ordering data

Refer to the I/O modules for ordering data of the BaseUnits

© Siemens AG 2024

Overview

ET 200SP I/O module

- Can be plugged into type A0 and B1 BaseUnits (BU) with automatic coding
- LED display for error, operation, power, and status
- Clear labeling on front of module
  - Plain text identification of the module type and function class
  - 2D matrix code (article and serial number)
  - Connection diagram
  - Hardware and firmware version
  - Color code CC for module-specific color coding of the potentials at the BU terminals
  - Complete Article No.
- Optional labeling accessories
  - Labeling strips
  - Equipment labeling plate
- Optional module-specific color identification of the terminals according to the color code CC

Design

Digital input modules

- 4, 8 or 16 channels
- Color coding of the module type DI: White
- Usable types:
  - DI 8x24VDC Standard for BU type A0, color code CC01
  - DI 8x24VDC High Feature for BU type A0, color code CC01
  - DI 16x24VDC Standard for BU type A0, color code CC00
  - DI 8x24VDC NAMUR High Feature for BU type A0, color code CC01
  - DI 4x 120...230VAC Standard for BU type B1, color code CC41

Digital output modules

- 4, 8 or 16 channels
- Color coding of module types DQ and RQ: Black
- Usable types:
  - DQ 4x24VDC/2A Standard for BU type A0, color code CC02
  - DQ 8x24VDC/0.5A Standard for BU type A0, color code CC02
  - DQ 8x24VDC/0.5A High Feature for BU type A0, color code CC02
  - DQ 16x24VDC/0.5A Standard for BU type A0, color code CC00
  - DQ 4x24...230VAC/2A Standard for BU type B0, B1, color code CC41
  - RQ NO 4x120VDC-230VAC/5A Standard, BU type B0, color code CC00

© Siemens AG 2024

Selection and ordering data

Digital input modules

Digital input modules	
• DI 8x24VDC Standard, BU type A0, color code CC01	6ES7131-6BF01-0BA0
• DI 16x24VDC Standard, BU type A0, color code CC00	6ES7131-6BH01-0BA0
• DI 8x24VDC High Feature, BU type A0, color code CC01	6ES7131-6BF00-0CA0
• DI 8x24VDC High Speed, BU type A0, color code CC01	6ES7131-6BF00-0DA0
• DI 8x24VDC NAMUR High Feature, for BU type A0, color code CC01	6ES7131-6TF00-0CA0
• DI 4x120...230VAC Standard, for BU type B1, color code CC41	6ES7131-6FD01-0BB1
Suitable BaseUnits	
BU15-P16+A0+2D BU type A0; BaseUnit (light), 15 mm wide, with 16 process terminals to the module; for starting a new load group (max. 10 A)	6ES7193-6BP00-0DA0
BU15-P16+A0+2B BU type A0; BaseUnit (dark), 15 mm wide, with 16 process terminals to the module; for continuing the load group	6ES7193-6BP00-0BA0
BU15-P16+A10+2D BU type A0; BaseUnit (light), 15 mm wide, with 16 process terminals (1...16) to the module and an additional 10 internally bridged AUX terminals (1A to 10 A); for starting a new load group (max. 10 A)	6ES7193-6BP20-0DA0
BU15-P16+A10+2B BU type A0; BaseUnit (dark), 15 mm wide, with 16 process terminals (1...16) to the module and an additional 10 internally bridged AUX terminals (1A to 10 A); for continuing the load group	6ES7193-6BP20-0BA0
BU20-P12+A0+4B BU type B1; BaseUnit (dark), 20 mm wide, with 12 process terminals to the module; for continuing the load group	6ES7193-6BP20-0BB1
Accessories	
Equipment labeling plates 10 sheets with 16 labels each	6ES7193-6LF30-0AW0
Labeling strips	
• 500 labeling strips on roll, light gray	6ES7193-6LR10-0AA0
• 1 000 labeling strips on paper sheet in A4 format, light gray	6ES7193-6LA10-0AA0
BU cover For covering empty slots (gaps), 5 units	
• 15 mm wide	6ES7133-6CV15-1AM0
• 20 mm wide	6ES7133-6CV20-1AM0
Shield connection 5 shield supports including support foot and shield terminals each for plugging onto BaseUnits with automatic low-impedance connection to functional grounding	6ES7193-6SC20-1AM0

Selection and ordering data (continued)

Color-coded labels	
• Width 15 mm	
- Color code CC01, module-specific, for 16 push-in terminals; for BaseUnit type A0, A1; terminals 1 to 8 gray, terminals 9 to 16 red; 10 units	6ES7193-6CP01-2MA0
- Color code CC71, for 10 AUX terminals 1A to 10A, yellow/green; for BU type A0 with push-in terminals; 10 units	6ES7193-6CP71-2AA0
- Color code CC72, for 10 AUX terminals 1A to 10A, red; for BU type A0 with push-in terminals; 10 units	6ES7193-6CP72-2AA0
- Color code CC73, for 10 AUX terminals 1A to 10A, blue; for BU type A0 with push-in terminals; 10 units	6ES7193-6CP73-2AA0
• Width 20 mm	
- Color code CC41, for 16 process terminals, BU type B1, terminals 1 to 4 gray, terminals 5 to 8 rot, terminals 9 to 12 blue; 10 units	6ES7193-6CP41-2MB0

Digital output modules

Digital output modules	
• DQ 4x24VDC/2A Standard, BU type A0, color code CC02	6ES7132-6BD20-0BA0
• DQ 8x24VDC/0.5A Standard, BU type A0, color code CC02	6ES7132-6BF01-0BA0
• DQ 8x24VDC/0.5A High Feature, BU type A0, color code CC02	6ES7132-6BF00-0CA0
• DQ 16x24VDC/0.5A Standard, BU type A0, color code CC00	6ES7132-6BH01-0BA0
• DQ 4x24..230VAC/2A Standard, BU type B0, B1, color code CC41	6ES7132-6FD00-0BB1
• RQ NO 4x 120V DC...230VAC/5A Standard, normally open contact, for BU type B0 or B1, module diagnostics, color code CC00	6ES7132-6HD01-0BB1
Suitable BaseUnits	
BU15-P16+A0+2D BU type A0; BaseUnit (light), 15 mm wide, with 16 process terminals to the module; for starting a new load group (max. 10 A)	6ES7193-6BP00-0DA0
BU15-P16+A0+2B BU type A0; BaseUnit (dark), 15 mm wide, with 16 process terminals to the module; for continuing the load group	6ES7193-6BP00-0BA0
BU15-P16+A10+2D BU type A0; BaseUnit (light), 15 mm wide, with 16 process terminals (1...16) to the module and an additional 10 internally bridged AUX terminals (1A to 10 A); for starting a new load group (max. 10 A)	6ES7193-6BP20-0DA0
BU15-P16+A10+2B BU type A0; BaseUnit (dark), 15 mm wide, with 16 process terminals (1...16) to the module and an additional 10 internally bridged AUX terminals (1A to 10 A); for continuing the load group	6ES7193-6BP20-0BA0

© Siemens AG 2024

Selection and ordering data (continued)

BU20-P12+A4+0B BU type B0; BaseUnit (dark), 20 mm wide, with 12 process terminals (1...12) to the module and an additional 4 internally bridged AUX terminals (1A to 4A); for continuing the load group	**6ES7193-6BP20-0BB0**
BU20-P12+A0+4B BU type B1; BaseUnit (dark), 20 mm wide, with 12 process terminals to the module; for continuing the load group	**6ES7193-6BP20-0BB1**
Accessories	
Equipment labeling plates 10 sheets with 16 labels each	**6ES7193-6LF30-0AW0**
Labeling strips	
• 500 labeling strips on roll, light gray	**6ES7193-6LR10-0AA0**
• 1 000 labeling strips on paper sheet in A4 format, light gray	**6ES7193-6LA10-0AA0**
BU cover For covering empty slots (gaps); 5 units	
• 15 mm wide	**6ES7133-6CV15-1AM0**
• 20 mm wide	**6ES7133-6CV20-1AM0**
Shield connection 5 shield supports including support foot and shield terminals each for plugging onto BaseUnits with automatic low-impedance connection to functional grounding	**6ES7193-6SC20-1AM0**
Color-coded labels	
• Width 15 mm	
- Color code CC02, for 16 push-in terminals; for BU type A0, A1; terminals 1 to 8 gray, terminals 9 to 16 blue, 10 units	**6ES7193-6CP02-2MA0**
- Color code CC71, for 10 AUX terminals 1A to 10A, yellow/green; for BU type A0 with push-in terminals; 10 units	**6ES7193-6CP71-2AA0**
- Color code CC72, for 10 AUX terminals 1A to 10A, red; for BU type A0 with push-in terminals; 10 units	**6ES7193-6CP72-2AA0**
- Color code CC73, for 10 AUX terminals 1A to 10A, blue; for BU type A0 with push-in terminals; 10 units	**6ES7193-6CP73-2AA0**
• Width 20 mm	
- Color code CC41, for 16 process terminals, BU type B1, gray (terminals 1 to 4), red (terminals 5 to 8), blue (terminals 9 to 12); 10 units	**6ES7193-6CP41-2MB0**
- Color code CC81, for 4 AUX terminals 1A to 4A, yellow/green, for BU type B0; 10 units	**6ES7193-6CP81-2AB0**
- Color code CC82, for 4 AUX terminals 1A to 4A, red, for BU type B0; 10 units	**6ES7193-6CP82-2AB0**
- Color code CC83, for 4 AUX terminals 1A to 4A, blue, for BU type B0; 10 units	**6ES7193-6CP83-2AB0**

© Siemens AG 2024

Overview

ET 200SP I/O module

- Can be plugged into type A0, D0 or A1 BaseUnits (BU) with automatic coding
- LED display for error, operation, power, and status
- Clear labeling on front of module
  - Plain text identification of the module type and function class
  - 2D matrix code (article and serial number)
  - Connection diagram
  - Hardware and firmware version
  - Color code CC for module-specific color coding of the potentials at the terminals of the BU
  - Complete Article No.
- Optional labeling accessories
  - Labeling strips
  - Equipment labeling plate
- Optional module-specific color identification of the terminals according to the color code CC

Design

Analog input modules

- 2, 4 or 8-channels
- Color coding of the module type AI: Light blue
- Usable types:
  - AI 4xU/I 2-wire Standard for BU type A0 or A1, color code CC03
  - AI 4xI 2/4-wire Standard for BU type A0 or A1, color code CC03
  - AI 2xU/I 2/4-wire High Feature for BU type A0 or A1, color code CC05
  - AI 4xI 2-wire HART High Feature for BU type A0 or A1, color code CC03
  - AI 4xRTD/TC 2-, 3-, 4-wire High Feature for BU type A0 or A1, color code CC00
  - AI 8xRTD/TC 2-wire High Feature for BU type A0 or A1, color code CC00
  - AI Energy Meter Standard for BU type D0

Analog output modules

- 2 or 4 channels
- Color coding of the module type AQ: Dark blue
- Usable types:
  - AQ 4xU/I Standard for BU type A0 or A1, color code CC00
  - AQ 2xU/I High Feature for BU type A0 or A1, color code CC00
  - AQ 4xI HART High Feature for BU type A0 or A1, color code CC00

© Siemens AG 2024

Selection and ordering data

Analog input modules

Analog input modules	
• AI 2xU/I 2/4-wire High Feature, BU type A0 or A1, color code CC05, 16-bit, ± 0.1 %	6ES7134-6HB00-0CA1
• AI 4xI 2-wire HART High Feature, BU type A0 or A1, color code CC03, 16-bit, ± 0.3 %	6ES7134-6TD00-0CA1
• AI 4xRTD/TC 2-, 3-, 4-wire High Feature BU type A0 or A1, color code CC00, 16-bit, ± 0.1 %	6ES7134-6JD00-0CA1
• AI 8xRTD/TC 2-wire High Feature BU type A0 or A1, color code CC00, 16-bit, ± 0.1 %	6ES7134-6JF00-0CA1
• AI 4 × I 2-/4-wire Standard, BU type A0 or A1, color code CC03, 16-bit, ± 0.3%	6ES7134-6GD01-0BA1
• AI 4XU/I 2-wire Standard, BU type A0 or A1, color code CC03, 16-bit, ± 0.3%	6ES7134-6HD01-0BA1
• AI Energy Meter Standard 480 V AC, BU type D0	6ES7134-6PA20-0BD0
Suitable type A0 BaseUnits	
BU15-P16+A0+2D BU type A0; BaseUnit (light), 15 mm wide, with 16 process terminals to the module; for starting a new load group (max. 10 A)	6ES7193-6BP00-0DA0
BU15-P16+A0+2B BU type A0; BaseUnit (dark), 15 mm wide, with 16 process terminals to the module; for continuing the load group	6ES7193-6BP00-0BA0
BU15-P16+A10+2D BU type A0; BaseUnit (light), 15 mm wide, with 16 process terminals (1...16) to the module and an additional 10 internally bridged AUX terminals (1A to 10 A); for starting a new load group (max. 10 A)	6ES7193-6BP20-0DA0
BU15-P16+A10+2B BU type A0; BaseUnit (dark), 15 mm wide, with 16 process terminals (1...16) to the module and an additional 10 internally bridged AUX terminals (1A to 10 A); for continuing the load group	6ES7193-6BP20-0BA0
Suitable type A1 BaseUnits (temperature detection)	
BU15-P16+A0+2D/T BU type A1; BaseUnit (light), 15 mm wide, with 16 process terminals to the module; for starting a new load group (max. 10 A)	6ES7193-6BP00-0DA1
BU15-P16+A0+2B/T BU type A1; BaseUnit (dark), 15 mm wide, with 16 process terminals to the module; for continuing the load group	6ES7193-6BP00-0BA1
BU15-P16+A0+12D/T BU type A1; BaseUnit (light), 15 mm wide, with 16 process terminals (1...16) to the module and an additional 2 × 5 internally bridged add-on terminals (1B to 5B and 1C to 5C); for starting a new load group (max. 10 A)	6ES7193-6BP40-0DA1

Selection and ordering data (continued)

BU15-P16+A0+12B/T BU type A1; BaseUnit (dark), 15 mm wide, with 16 process terminals (1...16) to the module and an additional 2 × 5 internally bridged add-on terminals (1B to 5B and 1C to 5C); for continuing the load group	6ES7193-6BP40-0BA1
Suitable type D0 BaseUnits	
BU20-P12+A0+0B BU type D0; BaseUnit with 12 push-in terminals, without AUX terminals, bridged to the left	6ES7193-6BP00-0BD0
Accessories	
Equipment labeling plates 10 sheets with 16 labels each	6ES7193-6LF30-0AW0
Labeling strips	
• 500 labeling strips on roll, light gray	6ES7193-6LR10-0AA0
• 1 000 labeling strips on paper sheet in A4 format, light gray	6ES7193-6LA10-0AA0
BU cover For covering empty slots (gaps); 5 units	
• 15 mm wide	6ES7133-6CV15-1AM0
• 20 mm wide	6ES7133-6CV20-1AM0
Shield connection 5 shield supports including support foot and shield terminals each for plugging onto BaseUnits with automatic low-impedance connection to functional grounding	6ES7193-6SC20-1AM0
Color-coded labels, width 15 mm	
• Color code CC00, for 16 push-in terminals; for BU type A0, A1; terminals 1 to 8 gray, terminals 9 to 16 red; 10 units	6ES7193-6CP00-2MA0
• Color code CC03, module-specific, for 16 push-in terminals; for BU type A0, A1; terminals 1 to 8 gray, terminals 9 to 12 red; terminals 13 to 16 gray; 10 units	6ES7193-6CP03-2MA0
• Color code CC05, module-specific, for 16 push-in terminals; for BU type A0, A1; terminals 1 to 12 gray, terminals 13 to 14 red, terminals 15 to 16 blue; 10 units	6ES7193-6CP05-2MA0
• Color code CC71, for 10 AUX terminals 1A to 10A, yellow/green; for BU-type A0 with push-in terminals; 10 units	6ES7193-6CP71-2AA0
• Color code CC72, for 10 AUX terminals 1A to 10A, red; for BU-type A0 with push-in terminals; 10 units	6ES7193-6CP72-2AA0
• Color code CC73, for 10 AUX terminals 1A to 10A, blue; for BU type A0 with push-in terminals; 10 units	6ES7193-6CP73-2AA0
• Color code CC74, for 2 × 5 add-on terminals, 5 × red, 5 × blue, for BU type A1, with push-in terminals; 10 units	6ES7193-6CP74-2AA0

© Siemens AG 2024

Selection and ordering data (continued)

Analog output modules

Analog output modules	
• AQ 4xU/I Standard, BU type A0 or A1, color code CC00, 16-bit, ± 0.3 %	6ES7135-6HD00-0BA1
• AQ 2xU/I High Feature, BU type A0 or A1, color code CC00, 16-bit, ± 0.1%	6ES7135-6HB00-0CA1
• AQ 4xI HART High Feature, BU type A0 or A1, color code CC00, 16-bit, ± 0.3 %	6ES7135-6TD00-0CA1
Suitable type A0 BaseUnits	
BU15-P16+A0+2D BU type A0; BaseUnit (light), 15 mm wide, with 16 process terminals to the module; for starting a new load group (max. 10 A)	6ES7193-6BP00-0DA0
BU15-P16+A0+2B BU type A0; BaseUnit (dark), 15 mm wide, with 16 process terminals to the module; for continuing the load group	6ES7193-6BP00-0BA0
BU15-P16+A10+2D BU type A0; BaseUnit (light), 15 mm wide, with 16 process terminals (1...16) to the module and an additional 10 internally bridged AUX terminals (1A to 10 A); for starting a new load group (max. 10 A)	6ES7193-6BP20-0DA0
BU15-P16+A10+2B BU type A0; BaseUnit (dark), 15 mm wide, with 16 process terminals (1...16) to the module and an additional 10 internally bridged AUX terminals (1A to 10 A); for continuing the load group	6ES7193-6BP20-0BA0
Suitable type A1 BaseUnits (temperature detection)	
BU15-P16+A0+2D/T BU type A1; BaseUnit (light), 15 mm wide, with 16 process terminals to the module; for starting a new load group (max. 10 A)	6ES7193-6BP00-0DA1
BU15-P16+A0+2B/T BU type A1; BaseUnit (dark), 15 mm wide, with 16 process terminals to the module; for continuing the load group	6ES7193-6BP00-0BA1
BU15-P16+A0+12D/T BU type A1; BaseUnit (light), 15 mm wide, with 16 process terminals (1...16) to the module and an additional 2 × 5 internally bridged add-on terminals (1B to 5B and 1C to 5C); for starting a new load group (max. 10 A)	6ES7193-6BP40-0DA1
BU15-P16+A0+12B/T BU type A1; BaseUnit (dark), 15 mm wide, with 16 process terminals (1...16) to the module and an additional 2 × 5 internally bridged add-on terminals (1B to 5B and 1C to 5C); for continuing the load group	6ES7193-6BP40-0BA1
Accessories	
Equipment labeling plates 10 sheets with 16 labels each	6ES7193-6LF30-0AW0
Labeling strips	
• 500 labeling strips on roll, light gray	6ES7193-6LR10-0AA0
• 1 000 labeling strips on paper sheet in A4 format, light gray	6ES7193-6LA10-0AA0

Selection and ordering data (continued)

BU cover For covering empty slots (gaps), width 15 mm; 5 units	6ES7133-6CV15-1AM0
Shield connection 5 shield supports including support foot and shield terminals each for plugging onto BaseUnits with automatic low-impedance connection to functional grounding	6ES7193-6SC20-1AM0
Color-coded labels, width 15 mm	
• Color code CC00, for 16 push-in terminals; for BU type A0, A1; terminals 1 to 8 gray, terminals 9 to 16 red; 10 units	6ES7193-6CP00-2MA0
• Color code CC71, for 10 AUX terminals 1A to 10A, yellow/green; for BU-type A0 with push-in terminals; 10 units	6ES7193-6CP71-2AA0
• Color code CC72, for 10 AUX terminals 1A to 10A, red; for BU-type A0 with push-in terminals; 10 units	6ES7193-6CP72-2AA0
• Color code CC73, for 10 AUX terminals 1A to 10A, blue; for BU-type A0 with push-in terminals; 10 units	6ES7193-6CP73-2AA0
• Color code CC74, for 2 × 5 add-on terminals, 5 × red, 5 × blue; for BU-type A1, with push-in terminals; 10 units	6ES7193-6CP74-2AA0

© Siemens AG 2024

Overview

SIMATIC ET 200pro is a modular I/O system with high IP65/66/67 degree of protection suitable for use at machine level outside the control cabinet. As a result of the innovative design, the ET 200pro has a relatively small size and can be flexibly adapted to the requirements of the respective automation task with regard to the connection system and I/Os. Summary of the most important features of the SIMATIC ET 200pro:

- Distributed I/O system with IP65/67 degree of protection for cabinet-free use at machine level
- Small, multi-functional complete solution: analog and digital I/O modules as well as safety-related digital I/O modules
- Communication over PROFIBUS DP, transmission rate up to 12 Mbps
- Mixed arrangement of safety-oriented and standard modules in the same station possible
- Free selection of connection system: direct, ECOFAST or M12 7/8"
- Power module for simple implementation of load groups
- Hot swapping of modules
- Simple assembly and independent wiring
- Comprehensive diagnostics: exact to the module or channel

Design

The architecture of the ET 200pro is based on the proven separation of modules from the bus/power supply connection system. This permits the T functionality for bus and 24 V DC power supply for the interface module, and prewiring of sensor/actuator connections for the electronic modules (permanent wiring). When servicing, the permanent wiring permits "hot swapping" of an electronic module without having to switch off the remaining station. This can continue without interruption during the replacement. When replacing an electronic module, the complete I/O wiring remains on the connection module, and need be neither labeled nor removed.

Up to 16 electronic modules can be arranged in any order between the interface module (left) and the termination module (right limit).

Modules of an ET 200pro remote I/O station

The ET 200pro modules are usually designed in two or three parts. Interface and power modules as well as digital and analog electronic modules comprise:

- Bus module as mechanical and electrical connecting element of the individual ET 200pro modules (they form the backplane bus of the system)
- Electronics or interface module
- Connection module

The ET 200pro modules are fitted when delivered on the associated bus module.

An ET 200pro remote I/O station consists of:

- Module support
- Interface module for PROFIBUS DP
- Connection module for the PROFIBUS DP interface module
  - CM IM DP direct with up to 6 M20 cable glands
  - CM IM DP ECOFAST Cu
  - CM IM DP M12 7/8"
- Max. 16 electronic modules with associated connection modules which may be assembled up to a station width of 1 m
- Termination module (included in scope of delivery of interface module)

Expansion modules

The following expansion modules are available:

- Digital electronic modules
- Analog electronic modules
- Safety-related electronic modules
- I/O connection modules
  - CM IO 4 × M12 for digital or analog electronic modules
  - CM IO 8 × M12 for digital electronic modules
  - CM IO 12 × M12 for 4/8 F-DI/4 F-DO
  - CM IO 16 × M12 for 8/16 F-DI
- Power module electronics PM-E
- Connection modules for power module
  - CM PM-E direct with up to 2 M20 cable glands
  - CM PM-E ECOFAST Cu
  - CM PM-E 7/8"

Module support

Various module supports are available for mounting the ET 200pro:

© Siemens AG 2024

Design (continued)

- Narrow module support

  With two mounting flanges, the ET 200pro remote I/O station can be completely pre-installed on this module support on the workbench.

- Compact-narrow module support

  The compact-narrow module support permits the most space-saving design.

Expansion limits

- Number of electronic modules per station (between interface module and termination module): up to 16
- Max. width (without module support): 1 m
- Electronics/sensor supply 1L+ max. 5 A per station
- Load voltage supply 2L+ max. 10 A per potential group
- Maximum address range of a station: 244 bytes for inputs and 244 bytes for outputs

ET 200pro configuration

The TIA Selection Tool can be used to assemble an ET 200pro remote I/O station quickly and easily. The tool is familiar with the configuration rules and supports users in the selection of all components and associated accessories in interactive mode.

Note:

Please note when working with the TIA Selection Tool that the applications and product range of ET 200pro are limited in the context of SIMATIC PCS 7!

Integration

The distributed ET 200pro remote I/O stations are connected to SIMATIC PCS 7 automation systems (controllers) via PROFIBUS DP. Data transfer rates of up to 12 Mbit/s are possible.

The SIMATIC ET 200pro is integrated into SIMATIC PCS 7 using standard driver blocks. You can therefore configure and parameterize the ET 200pro remote I/O stations in the SIMATIC Manager of the engineering system very simply using HW Config.

Technical specifications

Technical specifications - General	
Electronics modules	• Digital inputs/outputs • Analog inputs/outputs • Safety-related digital inputs/outputs
Connection system for actuator/sensor	M12 round plug connection with standard assignments for actuator/sensor
Data transfer rate, max.	12 Mbit/s (PROFIBUS DP)
Supply voltage	24 V DC
Current consumption of an ET 200pro (internal and sensor supply, non-switched voltage), up to 55 °C, max.	≤ 5 A
Load current for ET 200pro per incoming supply (IM, PM, switched voltage), up to 55 °C, max.	10 A
For total configuration with looping through (several ET 200pro), up to 55 °C, max.	16 A (with direct connection module)
Degree of protection	IP65/66/IP67 for interface, digital and analog modules
Material	Thermoplast (glass-fiber reinforced)
Ambient conditions	
Temperature	0 ... 55 °C (-25 °C on request)
Relative humidity	5 ... 100 %
Atmospheric pressure	795 ... 1 080 hPa
Mechanical stress	
Vibrations	Vibration test in accordance with IEC 60068 Part 2-6 (sine) • Constant acceleration 5 g, occasionally 10 g, for interface, digital and analog modules • 2 g for motor starters
Shock	• Shock test according to IEC 680068 Part 2-27, half-sine, 30 g, 18 ms duration for interface, digital and analog modules • 15 g, 11 ms duration for motor starters
Approvals	UL, CSA and cULus

For detailed technical specifications, especially for individual components such as interface modules, power modules and electronic modules, see Catalog ST 70, Chapter "IO systems" or Industry Mall under “Automation technology - Automation systems - SIMATIC industrial automation systems - IO systems - SIMATIC ET 200 systems without control cabinets" – SIMATIC ET 200pro".

© Siemens AG 2024

Overview

The IM 154-2 DP High Feature interface module is responsible for PROFIBUS communication between the ET 200pro station and the host automation system (controller) as PROFIBUS DP master. The scope of delivery of the interface module also includes a terminating module which is plugged in following the last electronics module of the station.

Function

Features of the IM 154-2 DP High Feature interface module

- Mounted on delivery on the bus module
- Connects the ET 200pro station to the PROFIBUS DP via the connection module
- Prepares the data for the connected electronics modules
- Max. 16 electronics modules can be operated on an interface module - also safety-related
- PROFIBUS DP address of the ET 200pro station can be set on the connection module
- Terminating resistor of the PROFIBUS DP can be switched on and off on the connection module
- Maximum address range: 244 bytes for inputs and 244 bytes for outputs
- Powers the ET 200pro station via the connection module with the sensor/electronics supply 1L+ and the load power supply 2L+
- Integral power module for the load power supply 2L+
- Can be operated as DP-V1 slave on Y link

Selection and ordering data

IM154-2 High Feature interface module for ET 200pro; for communication between ET 200pro and host masters over PROFIBUS DP; supports PROFIsafe	**6ES7154-2AA01-0AB0**
Connection modules for IM154-2 High Feature interface module	
• CM IM DP ECOFAST connection module for connection of PROFIBUS DP and 24 V DC power supply to PROFIBUS interface modules, 2 ECOFAST Cu connectors	**6ES7194-4AA00-0AA0**
• CM IM DP direct connection module for direct connection of PROFIBUS DP and 24 V DC power supply to PROFIBUS interface modules, up to six M20 cable glands	**6ES7194-4AC00-0AA0**
• CM IM DP M12 7/8" connection module for connection of PROFIBUS DP and 24 V DC power supply to PROFIBUS interface modules, 2 × M12 and 2 × 7/8"	**6ES7194-4AD00-0AA0**
Cables and further accessories For cables and further accessories for CM IM DP ECOFAST, CM IM DP direct and CM IM DP M12 7/8" connection modules, see Catalog ST 70, Chapter "IO systems" or Industry Mall under "Automation technology – Automation systems – SIMATIC industrial automation systems – IO systems – SIMATIC ET 200 systems without control cabinets – SIMATIC ET 200pro"	
General accessories	
ET 200pro module support	
• Narrow, for interface, electronics and power modules	
- 500 mm	**6ES7194-4GA00-0AA0**
- 1 000 mm	**6ES7194-4GA60-0AA0**
- 2 000 mm, can be cut to length	**6ES7194-4GA20-0AA0**
• Compact-narrow, for interface, electronics and power modules	
- 500 mm	**6ES7194-4GC70-0AA0**
- 1 000 mm	**6ES7194-4GC60-0AA0**
- 2 000 mm, can be cut to length	**6ES7194-4GC20-0AA0**
Spare fuse 12.5 A fast-blow, for interface and power modules, 10 units per pack	**6ES7194-4HB00-0AA0**

Accessories

Connection modules

The connection module for the IM 154-2 DP High Feature interface module (to be ordered separately) is available in three different connection versions:

- CM IM DP direct
- CM IM DP ECOFAST Cu
- CM IM DP M12 7/8"

The PROFIBUS address can be set on the connection module per DIL switch. The segmenting terminating resistor can be connected using a further DIL switch.

© Siemens AG 2024

Overview

The following digital electronics modules can be used for connecting actuators/sensors in the context of SIMATIC PCS 7:

Digital input modules

- EM 8 DI DC 24 V High Feature
  - Digital electronics module with eight inputs
  - Suitable for standard switches and proximity switches (BEROs)
  - Rated input voltage 24 V DC
  - Diagnostics "Short-circuit of sensor supply to ground" per channel
  - Diagnostics "Open-circuit" per channel
  - Process alarm
  - Configurable input delay

Digital output modules

- EM 4 DO, 24 V DC; 2 A High Feature
  - Digital electronics module with four outputs
  - Suitable for solenoid valves, DC contactors and indicator lights
  - Output current 2 A per output
  - Rated load voltage 24 V DC
  - Diagnostics "Short-circuit of outputs to ground" per channel
  - Diagnostics "Short-circuit of outputs to P" per channel
  - Diagnostics "Open-circuit in outputs" per channel
  - Diagnostics "Load voltage missing" per module
  - Configurable substitute value

Selection and ordering data

Digital electronic modules ***Digital input modules***	
Digital input module 8 DI High Feature 24 V DC, with channel diagnostics, including bus module. Connection module must be ordered separately ***Digital output modules***	**6ES7141-4BF00-0AB0**
Digital output module 4 DO High Feature 24 V DC, 2 A, with channel diagnostics, including bus module. Connection module must be ordered separately	**6ES7142-4BD00-0AB0**
Accessories	
Connection module CM IO 4 × M12 4 M12 sockets for connecting digital or analog sensors/actuators to ET 200pro	**6ES7194-4CA00-0AA0**
Connection module CM IO 8 × M12 8 M12 sockets for connecting digital sensors/actuators to ET 200pro	**6ES7194-4CB00-0AA0**
Module labels for color-coded identification of the CM IOs in white, red, blue and green; pack with 100 units of each color	**6ES7194-4HA00-0AA0**
Further accessories Connectors, cables and further accessories, see Catalog ST 70, section "IO systems" or Industry Mall under "Automation engineering – Automation systems – SIMATIC industrial automation systems – IO systems – SIMATIC ET 200 systems without control cabinets – SIMATIC ET 200pro"	

Accessories

Connection modules

Actuators and sensors are connected using commercially-available 5-contact M12 plugs on the connection module. The connection module is plugged onto the electronics module, and screwed to the latter. The following connection modules (to be ordered separately) are available for the above-mentioned electronics modules:

- CM IO 4x M12 (for EM DI and EM DO)
- CM IO 8x M12 (for EM DI)

Depending on the selected connection module, each plug for the 8-channel digital input module has one or two channels:

- 4 x M12 round plug connections with 2 channels per plug (double assignment)
- 8 x M12 round plug connections with 1 channel per plug (single assignment)

© Siemens AG 2024

Overview

The following analog electronics modules can be used for connecting actuators/sensors in the context of SIMATIC PCS 7:

Analog input modules

EM 4 AI U High Feature

- 4 inputs for voltage measurements
- Input ranges:
  - ±10 V, resolution 15 bits + sign
  - ±5 V, resolution 15 bits + sign
  - 0 to 10 V, resolution 15 bit
  - 1 to 5 V, resolution 15 bit
- Electrically isolated from load voltage 2L+
- Diagnostics Short-circuit of sensor supply to ground per module
- Diagnostics Short-circuit, open-circuit per channel (depending on measuring range)
- Process interrupt with limit violation on channel 0
- Permissible common mode voltage 5 V AC pp

EM 4 AI I High Feature

- 4 inputs for current measurements
- Input ranges:
  - ±20 mA, resolution 15 bits + sign
  - 0 to 20 mA, resolution 15 bit
  - 4 to 20 mA, resolution 15 bit
- Two-wire and four-wire transmitters can be connected
- Electrically isolated from load voltage 2L+
- Diagnostics Short-circuit of sensor supply to ground per module
- Diagnostics Short-circuit, open-circuit per channel (depending on measuring range)
- Process interrupt with limit violation on channel 0
- Permissible common mode voltage 5 V AC pp

EM 4 AI RTD High Feature

- 4 inputs for isolated (floating) resistance measurement or resistance thermometers with 2-, 3- and 4-wire connection systems

Overview (continued)

- Input ranges:
  - Resistance measurement: 150 Ω; 300 Ω; 600 Ω; 3000 Ω; resolution 15 bit
  - Resistance thermometer: Pt100; Ni100; Ni120; Pt200; Ni200; Pt500; Ni500; Pt1000; Ni1000; resolution 15 bit + sign
- Automatic compensation of line resistances with 3-wire and 4-wire connection systems
- Parameterizable temperature coefficient with resistance-type sensors
- Electrically isolated from load voltage supply 1L+ and 2L+
- Linearization of sensor characteristics
- Diagnostics Open-circuit per channel (terminals 1 and 3 are monitored for open-circuit)
- Permissible common mode voltage 10 V AC pp

EM 4 AI TC High Feature

- 4 inputs for isolated/non-isolated thermocouples or voltage measurement; resolution 15 bits + sign
- Input ranges:
  - Voltage measurement: ± 80 mV
  - Thermocouples: Type B, E, J, K, L, N, R, S, T
- Inputs are isolated from the encoder voltage supply 1L+ and load voltage supply 2L+
- Linearization of the voltage characteristic (conversion of the thermoelectric voltage to a temperature value)
- Smoothing
- Interference frequency suppression
- Various options to compensate for the reference temperature
- Overflow and underflow diagnostics

Analog output modules

EM 4 AO U High Feature

- 4 outputs for voltage output
- Output ranges:
  - ±10 V, resolution 15 bits + sign
  - 1 to 5 V, resolution 14 bit
  - 0 to 10 V, resolution 15 bit
- Electrically isolated from sensor supply voltage 1L+
- Diagnostics Short-circuit of sensor supply to ground per module
- Diagnostics Short-circuit in outputs per channel
- Substitute value output

EM 4 AO I High Feature

- 4 outputs for current output
- Output ranges:
  - ±20 mA, resolution 15 bits + sign
  - 4 to 20 mA, resolution 14 bit
  - 0 to 20 mA, resolution 15 bit
- Electrically isolated from sensor supply voltage 1L+

© Siemens AG 2024

Overview (continued)

- Diagnostics Short-circuit of sensor supply to ground per module
- Diagnostics Open-circuit per channel
- Substitute value output

Selection and ordering data

Analog electronic modules ***Analog input modules***	
Analog input module 4 AI U High Feature, ±10 V; ±5 V; 0 ... 10 V; 1 ... 5 V, channel diagnostics, including bus module. The terminal module must be ordered separately. Note: Only in spare part-compatible operation to 6ES7144-4FF00-0AB0!	6ES7144-4FF01-0AB0
Analog input module 4 AI I High Feature, ±20 mA; 0 ... 20 mA; 4 ... 20 mA, channel diagnostics, including bus module. The terminal module must be ordered separately. Note: Only in spare part-compatible operation to 6ES7144-4GF00-0AB0!	6ES7144-4GF01-0AB0
Analog input module 4 AI RTD High Feature; resistances: 150, 300, 600 and 3 000 Ohm; resistance thermometers: Pt100, 200, 500, 1000, Ni100, 120, 200, 500 and 1000; channel diagnostics, including bus module. The terminal module must be ordered separately.	6ES7144-4JF00-0AB0
Analog input module 4 AI TC High Feature; thermocouples: Type B, E, J, K, L, N, R, S, T; voltage measurement ±80 mV; channel diagnostics, including bus module. The terminal module must be ordered separately.	6ES7144-4PF00-0AB0
Analog output modules	
Analog output module 4 AO U High Feature, ±10 V; 0 ... 10 V; 1 ... 5 V, channel diagnostics, including bus module. The terminal module must be ordered separately.	6ES7145-4FF00-0AB0
Analog output module 4 AO I High Feature, ±20 mA; 0 ... 20 mA; 4 ... 20 mA, channel diagnostics, including bus module. The terminal module must be ordered separately.	6ES7145-4GF00-0AB0
Accessories	
Connection module CM IO 4 × M12 4 M12 sockets for connecting digital or analog sensors/actuators to ET 200pro	6ES7194-4CA00-0AA0
Module labels for color-coded identification of the CM IOs (white, red, blue, green); pack with 100 units of each color	6ES7194-4HA00-0AA0
Further accessories For plugs, cables and further accessories, see Catalog ST 70, section "IO systems" or Industry Mall under "Automation engineering – Automation systems – SIMATIC industrial automation systems – IO systems – SIMATIC ET 200 systems without control cabinets – SIMATIC ET 200pro"	

Accessories

Connection modules

Actuators and sensors are connected using commercially-available 5-contact M12 plugs on the connection module. The connection module is plugged onto the electronics module, and screwed to the latter. The connection module CM IO 4 x M12 (to be ordered separately) is available for the electronics modules.

© Siemens AG 2024

Overview

In combination with the safety-related automation systems of the SIMATIC PCS 7 process control system, the safety-related electronics modules of SIMATIC ET 200pro can be used to implement safety applications. The safety-related digital inputs record the signal statuses from safety-related sensors, and generate corresponding safety message frames for the automation system. Depending on the safety message frames of the automation system, the safety-related digital outputs trigger safe shut-down procedures. They are also responsible for monitoring short-circuits and cross-circuits up to the actuator. The safe communication with the automation systems is carried out over PROFIBUS with PROFIsafe.

All modules are certified up to SIL 3 (IEC 61508) and Cat. 4 (EN954-1).

Design

The following modules are available:

Safety-related digital input module EM 8/16 F-DI PROFIsafe

- 16 inputs (SIL2/Cat.3) or 8 inputs (SIL3/Cat.3 or Cat.4)
- Suitable for standard switches and 3/4-wire proximity switches (BEROs)
- Rated input voltage 24 V DC
- 4 short-circuit-proof sensor supplies for 4 inputs each
- External sensor power supply possible
- Group fault display (SF; red LED)
- Fault display for each sensor power supply (Vs1F to Vs4F) is output on the VsF LED and the associated channels
- Status and fault displays per input (dual-color green/red LED)
- Identification data
- Configurable diagnostics
- Can only be operated in safety mode

Safety-related digital input/output module EM 4/8 F-DI, 4 F-DO 2 A

- Inputs
  - 8 inputs (SIL 2/Cat. 3) or 4 inputs (SIL 3/Cat. 3 or Cat. 4)
  - Suitable for standard switches and 3/4-wire proximity switches (BEROs)
  - Rated input voltage 24 V DC
  - 2 short-circuit-proof sensor supplies for 4 inputs each
  - External sensor power supply possible
- Outputs
  - 4 outputs, current sourcing/sinking
  - Output current 2 A
  - Rated load voltage 24 V DC
  - Suitable for solenoid valves, DC contactors and indicator lights
- Group fault display (SF; red LED)
- Fault display for each sensor power supply (Vs1F to Vs2F) is output on the VsF LED and the associated channels
- Status and fault displays per input/output (dual-color green/red LED)
- Identification data
- Configurable diagnostics
- Achievable safety class SIL 3
- Can only be operated in safety mode

© Siemens AG 2024

Selection and ordering data

Safety-related electronics modules ***Safety-related digital input module***	
Safety-related digital input module 8/16 F-DI PROFIsafe 24 V DC, including bus module. Connection module must be ordered separately ***Safety-related digital input/output module***	**6ES7148-4FA00-0AB0**
Safety-related digital input/output module 4/8 F-DI, 4 F-DO 2 A 24 V DC, including bus module. Connection module must be ordered separately	**6ES7148-4FC00-0AB0**
Accessories	
Connection module	
• CM IO 16 × M12 for the electronics module 8/16 F-DI, 24 V DC/2 A	**6ES7194-4DD00-0AA0**
• CM IO 12 × M12 for the electronics module 4/8 F-DI4 F-DO, 24 V DC/2 A	**6ES7194-4DC00-0AA0**
Further accessories	
Connectors, cables and further accessories, see Catalog ST 70, section "IO systems" or Industry Mall under "Automation engineering – Automation systems – SIMATIC industrial automation systems – IO systems – SIMATIC ET 200 systems without control cabinets – SIMATIC ET 200pro"	

Accessories

Connection modules

Actuators and sensors are connected using commercially available 5-pin M12 plugs on the connection module. The connection module is plugged onto the electronics module, and screwed to the latter. One of the following connection modules (to be ordered separately) is required for each of the above-mentioned electronics modules:

- Connection module CM IO 16 x M12
  for the electronics module 8/16 F-DI, 24 V DC/2 A
- Connection module CM IO 12 x M12
  for the electronics module 4/8 F-DI/4 F-DO, 24 V DC/2 A

© Siemens AG 2024

Overview

The power module PM-E DC 24 V is used within an ET 200pro station when generating 24 V DC load voltage groups for electronics modules.

You can position power modules in an ET 200pro station anywhere to the right of the interface module. The first power module is already integrated in the interface module.

Each power module installed in the ET 200pro remote I/O station interrupts the load voltage busbar and opens a new potential group (common potential) for the 2L+ load voltage supply. All subsequent load voltages of the electronics modules are fed from this power module. Each power module has a replaceable fuse for protecting the device. Only line protection according to DIN VDE 0100 need be provided externally in addition.

The electronics/sensor supply 1L+ is not interrupted by the power module, it is looped through.

The power module is fitted on the associated bus module when delivered.

Selection and ordering data

Power module	
Power module PM-E DC 24 V For generating 24 V DC load voltage groups for electronic modules within an ET 200pro station	**6ES7148-4CA00-0AA0**
Accessories	
Connection modules for power module	
• Connection module CM PM-E ECOFAST for supply of 24 V DC load voltage, 1 ECOFAST Cu connector	**6ES7194-4BA00-0AA0**
• Connection module CM PM-E direct for supply of 24 V DC load voltage, one or two M20 cable glands	**6ES7194-4BC00-0AA0**
• Connection module CM PM-E 7/8" for supply of 24 V DC load voltage, 1 x 7/8"	**6ES7194-4BD00-0AA0**
Spare fuse 12.5 A fast-blow, for interface and power modules, 10 units per pack	**6ES7194-4HB00-0AA0**
Further accessories	
For connectors, cables and further accessories, see Catalog ST 70 or Industry Mall under "Automation technology – Automation systems – SIMATIC industrial automation systems – I/O systems – SIMATIC ET 200 systems without control cabinet – SIMATIC ET 200pro".	

Accessories

Connection module

The connection module for the power module PM-E is used to connect the load voltage 2L+. It is fitted on the power module.

The module must be ordered separately, and is available with the following types of connection:

- CM PM-E direct
- CM PM-E ECOFAST
- CM PM-E 7/8"

© Siemens AG 2024

Overview

SIMATIC ET 200pro PS, 24 V, 8 A

The SIMATIC ET 200pro PS is a power supply with IP67 degree of protection which features the same technology and design as the ET 200pro distributed I/O system.

It is suitable for single-line installation on the ET 200pro module rack, but can also be mounted directly on a mounting plate.

Locating the power supply away from the electronics cabinet/enclosure reduces the thermal load and the required size for the cabinet/enclosure.

The power is supplied at connector X1. The X2 connector allows the mains voltage to be looped to other modules.

The cable for the 24 V DC supply of the ET 200pro is connected via ECOFAST standard connectors to the SIMATIC ET 200pro PS. The other cable end is left open, enabling it to be fitted with an ECOFAST connector, 7/8" round connector or a programming device screw connector and individually adapted to the various connection systems of power module terminal modules of the ET 200pro.

SIMATIC ET 200pro PS reports its status via signaling contacts for "24 V DC OK" and "Overtemperature".

Selection and ordering data

SIMATIC ET 200pro PS, 8 A Stabilized power supply in the technology and design of the ET 200pro distributed I/O system, permitting the loop-through of energy to further modules; with degree of protection IP67 Input: 3 400 ... 480 V AC Output: 24 V DC, 8 A	**6ES7148-4PC00-0HA0**
Accessories	
Cable connectors for power connection	
• For X1 (power input); Socket insert HAN Q4/2, angled, with screw; 5 contact sockets 6 mm², 2 auxiliary contacts 0.5 mm²	**3RK1911-2BE30**
• For X2 (looping mains voltage) Pin insert HAN Q4/2, angled, with screw; 4 contact pins 4 mm²	**3RK1911-2BF10**
Sealing cap For 9-pole power sockets	
• X2 (1 unit)	**3RK1902-0CJ00**
• X2 (10 units)	**3RK1902-0CK00**

More information

For more information and technical specifications of the SIMATIC ET 200pro PS power supply, see "SITOP Power Supplies in SIMATIC Design" in the Catalog KT 10.1.

Additional information is available via the Internet at:

- SITOP power supplies:
  http://www.siemens.com/sitop
- CAx data (2D, 3D, circuit diagram macros):
  http://www.siemens.com/sitop-cax
- Operating instructions:
  http://www.siemens.com/sitop/manuals
- SITOP Selection Tool for selecting power supplies:
  http://www.siemens.com/tst

© Siemens AG 2024

16/2	**Upgrades from SIMATIC PCS 7 V9.x to V10.0**
16/3	Upgrades for Engineering System
16/5	Upgrades for Operator System incl. OpenPCS 7 and Web Option for OS
16/7	Upgrades for Process Historian and Information Server
16/8	Upgrades for Maintenance Station
16/9	Upgrades for SIMATIC BATCH
16/10	Upgrades for SIMATIC Route Control
16/11	Operating System Packages for SIMATIC Process Control System IPC
16/13	**Upgrades from SIMATIC PCS 7 V8.x/V9.0 to V9.1**
16/14	Upgrades for Engineering System
16/16	Upgrades for Operator System incl. OpenPCS 7 and Web Option for OS
16/19	Upgrades for Process Historian and Information Server
16/20	Upgrades for Maintenance Station
16/21	Upgrades for SIMATIC BATCH
16/23	Upgrades for SIMATIC Route Control
16/24	Operating System Packages for SIMATIC Process Control System IPC
16/26	**Upgrades for SIMATIC PCS 7 V8.x to V9.0**
16/27	Upgrades for Engineering System and Management Console
16/28	Upgrades for Operator System incl. OpenPCS 7 and Web Option for OS
16/30	Upgrades for Process Historian and Information Server
16/31	Upgrades for Maintenance Station
16/32	Upgrades for SIMATIC BATCH
16/33	Upgrades for SIMATIC Route Control
16/34	**Updates/upgrades asynchronous to the PCS 7 version**
16/34	Upgrades for SIMATIC Logon
16/35	Upgrades for SIMATIC PDM
16/37	Upgrades for Safety Integrated for Process Automation
16/39	Upgrades for S7-PLCSIM Simulation Software
16/40	System communication via Industrial Ethernet

© Siemens AG 2024

Overview

You can learn here about the upgrade packages that are available for upgrading SIMATIC PCS 7 V9.x to V10.0, and the system components that are involved in the various upgrade packages.

The upgrades are divided into:

- Upgrades for Engineering System
- Upgrades for Operator System incl. OpenPCS 7 and Web Option for OS
- Upgrades for Process Historian and Information Server
- Upgrades for Maintenance Station
- Upgrades for SIMATIC BATCH
- Upgrades for SIMATIC Route Control

Products outside the SIMATIC PCS 7 product range

Upgrades for products from the product line of Totally Integrated Automation (TIA) that do not directly belong to the product range of SIMATIC PCS 7 and are therefore subject to their own version cycle are summarized in a separate section "Updates/upgrades asynchronous to PCS 7 version". These include, for example:

- SIMATIC PDM
- Software for Safety Integrated for Process Automation
- S7-PLCSIM simulation software
- Industrial Ethernet communications software for CP

Information is also provided there on the relationship between the various product versions and the SIMATIC PCS 7 versions.

© Siemens AG 2024

Overview

Engineering Upgrade Package AS/OS V9.x to V10.0

The SIMATIC PCS 7 Engineering System with Engineering software V9.x can be upgraded to Version 10.0 using the SIMATIC PCS 7 Engineering Upgrade Package AS/OS.

The licenses included in the Engineering Upgrade Package AS/OS V9.x to V10.0 apply to the following SIMATIC PCS 7 software products:

- PCS 7 ES Single Station, PCS 7 AS Engineering software, PCS 7 AS/OS Engineering software
- PCS 7 Import/Export Assistant
- SIMATIC Version Cross Manager
- SIMATIC Version Trail
- PCS 7 SFC Visualization
- PCS 7 BCE
- SIMATIC Management Console
- Industrial Ethernet communications software for CP

SIMATIC PCS 7 ES Single Station SN ASIA Upgrade Package V9.x to V10.0

The ASIA regional product variant "SIMATIC PCS 7 ES Single Station SN ASIA" that comes with SOFTNET-REDCONNECT communications software can be upgraded to V10 with the SIMATIC PCS 7 ES Single Station SN ASIA upgrade package specifically designed for this purpose.

SIMATIC PCS 7 Logic Matrix Upgrade

A separate upgrade is available for upgrading the SIMATIC PCS 7 Logic Matrix Viewer to V9.1.

SIMATIC Version Cross Manager Upgrade

The further developed SIMATIC Version Cross Manager V10.0 is available for use in SIMATIC PCS 7 V10.0. The upgrade of SIMATIC Version Cross Manager to V10.0 is part of the Engineering Upgrade Package AS/OS V9.x to V10.0.

Advanced Engineering System Upgrade

The SIMATIC PCS 7 Advanced Engineering System V9.x (incl. SP) can be used in SIMATIC PCS 7 10.0. Consequently, there is no need to offer a SIMATIC PCS 7 Advanced Engineering System upgrade package for upgrading to V10.0.

Selection and ordering data

Engineering software

Engineering software upgrade from V9.x to V10.0, based on the existing number of POs	
SIMATIC PCS 7 Engineering Upgrade Package AS/OS V9.x to V10.0 Software class A, runs with Windows 10 Enterprise 2019/2021 LTSC and Windows Server 2019/2022 Standard Edition 64-bit (see SIMATIC PCS 7 V10.0 Readme for more information), floating license for 1 user ***5 languages (English, German, French, Italian, Spanish)*** With SIMATIC PCS 7 Software Media Package	
• Goods delivery - License key on USB flash drive, Certificate of License, bundled with 1 × SIMATIC PCS 7 Software Media Package per order item	**6ES7651-5AX78-0YE5**
• Online delivery - License key download, online Certificate of License, combined with SIMATIC PCS 7 Software Media Package (software download and online Certificate of License) Note: Email address required!	**6ES7651-5AX78-0YK5**
ASIA, 2 languages (English, Chinese) With SIMATIC PCS 7 Software Media Package ASIA	
• Goods delivery - ASIA license key on USB hardlock, Certificate of License, bundled with 1 × SIMATIC PCS 7 Software Media Package ASIA per order item	**6ES7651-5AX78-0CE5**
SIMATIC PCS 7 ES Single Station SN ASIA Upgrade Package V9.x to V10.0 (incl. SOFTNET REDCONNECT) 2 languages (English, Chinese), software class A, runs with Windows 10 Enterprise 2019/2021 LTSC and Windows Server 2019/2022 Standard Edition 64-bit (see SIMATIC PCS 7 V10.0 Readme for more information), single license for 1 installation without SIMATIC PCS 7 Software Media Package ASIA • Goods delivery - ASIA license key USB hardlock, Certificate of License	**6ES7651-5AA78-6CE0**

© Siemens AG 2024

Selection and ordering data (continued)

SIMATIC PCS 7 Logic Matrix Upgrade from V9.x to V10.0	
SIMATIC PCS 7 Logic Matrix Viewer Upgrade from V9.x to V10.0 Runtime software, 2 languages (English, German), software class A, runs with Windows 10 Enterprise 2019/2021 LTSC and Windows Server 2019/2022 Standard Edition 64-bit (see SIMATIC PCS 7 V10.0 Readme for more information), single license for 1 installation without SIMATIC PCS 7 Software Media Package	
• Goods delivery - License key USB flash drive and Certificate of License	**6ES7658-1JB78-2YE0**
• Online delivery - License key download, online Certificate of License	**6ES7658-1JB78-2YK0**

© Siemens AG 2024

Overview

Upgrades combined in packages allow existing Operator Systems to be upgraded from V9.x to V10.0 in line with the number of existing process objects and archive tags.

OS software upgrades V9.x to V10.0

The following upgrade packages for upgrading to V10.0 will be offered for SIMATIC PCS 7 operator stations with OS software V9.x:

- SIMATIC PCS 7 OS Single Station Upgrade Package
- SIMATIC PCS 7 OS Server Upgrade Package
- SIMATIC PCS 7 OS Client/SFC Visualization Upgrade Package

The ASIA product variants "SIMATIC PCS 7 OS Single Station SN ASIA" and "SIMATIC PCS 7 OS Server SN ASIA" that come with SOFTNET-REDCONNECT communications software can be upgraded to V9.1 with specific upgrade packages:

- SIMATIC PCS 7 OS Single Station SN ASIA Upgrade Package
- SIMATIC PCS 7 OS Server SN ASIA Upgrade Package

Two upgrade packages of type OS Single Station or OS Server are required in each case for redundant SIMATIC PCS 7 Operator Stations.

In addition to the licenses for the PCS 7 OS software Single Station or Server, the upgrade packages for OS Single Station and OS Server include upgrade licenses for:

- SIMATIC PCS 7 SFC Visualization
- SIMATIC PCS 7 BCE
- Industrial Ethernet communications software for CP

The upgrade license for SIMATIC PCS 7 SFC Visualization is also part of the upgrade package SIMATIC PCS 7 OS Client/SFC Visualization.

With a SIMATIC PCS 7 OS Server upgrade package, only one SIMATIC PCS 7 OS Server can be upgraded.

Upgrade of the Web Option for OS V9.x to V10.0

Using the SIMATIC PCS 7 OS Web Server upgrade package, you can upgrade the SIMATIC PCS 7 Web Server, SIMATIC PCS 7 Web Diagnostics Server and SIMATIC PCS 7 Web Diagnostics Clients from V9.x to V10.0.

Selection and ordering data

OS software

OS software upgrade from V9.x to V10.0 based on the existing PO count	
SIMATIC PCS 7 OS Single Station Upgrade Package V9.x to V10.0 For OS Single Station, software class A, runs with Windows 10 Enterprise 2019/2021 LTSC (see SIMATIC PCS 7 V10.0 Readme for more information), single license for 1 installation ***5 languages (English, German, French, Italian, Spanish)*** With SIMATIC PCS 7 Software Media Package	
• Goods delivery - License key on USB flash drive, Certificate of License, bundled with 1 × SIMATIC PCS 7 Software Media Package per order item	6ES7652-5AX78-0YE0
• Online delivery - License key download, online Certificate of License, combined with SIMATIC PCS 7 Software Media Package (software download and online Certificate of License) Note: Email address required!	6ES7652-5AX78-0YK0
ASIA, 2 languages (English, Chinese) With SIMATIC PCS 7 Software Media Package ASIA	
• Goods delivery - ASIA license key on USB hardlock, Certificate of License, bundled with 1 × SIMATIC PCS 7 Software Media Package ASIA per order item	6ES7652-5AX78-0CE0
SIMATIC PCS 7 OS Single Station SN ASIA Upgrade Package V9.x to V10.0 (incl. SOFTNET REDCONNECT) For OS Single Station 2 languages (English, Chinese), software class A, runs with Windows 10 Enterprise 2019/2021 LTSC (see SIMATIC PCS 7 V10.0 Readme for more information), single license for 1 installation Without SIMATIC PCS 7 Software Media Package ASIA	
• Goods delivery - ASIA license key on USB hardlock, Certificate of License	6ES7658-2AA78-6CE0

© Siemens AG 2024

Selection and ordering data (continued)

SIMATIC PCS 7 OS Server Upgrade Package V9.x to V10.0 For OS Server Software class A, runs with Windows Server 2019/2022 Standard Edition 64-bit (see SIMATIC PCS 7 V10.0 Readme for more information), single license for 1 installation With SIMATIC PCS 7 Software Media Package ***5 languages (English, German, French, Italian, Spanish)*** With SIMATIC PCS 7 Software Media Package	
• Goods delivery - License key on USB flash drive, Certificate of License, bundled with 1 × SIMATIC PCS 7 Software Media Package per order item	6ES7652-5BX78-0YE0
• Online delivery - License key download, online Certificate of License, combined with SIMATIC PCS 7 Software Media Package (software download and online Certificate of License) Note: Email address required! ***ASIA, 2 languages (English, Chinese)*** With SIMATIC PCS 7 Software Media Package ASIA	6ES7652-5BX78-0YK0
• Goods delivery - ASIA license key on USB hardlock, Certificate of License, bundled with 1 × SIMATIC PCS 7 Software Media Package ASIA per order item	6ES7652-5BX78-0CE0
SIMATIC PCS 7 OS Server SN ASIA Upgrade Package V9.x to V10.0 For OS Server 2 languages (English, Chinese), software class A, runs with Windows Server 2019/2022 Standard Edition 64-bit (see SIMATIC PCS 7 V10.0 Readme for more information), single license for 1 installation Without SIMATIC PCS 7 Software Media Package ASIA	
• Goods delivery - ASIA license key USB hardlock, Certificate of License	6ES7658-2BA78-6CE0
SIMATIC PCS 7 OS Client/SFC Visualization Upgrade Package V9.x to V10.0 Software class A, runs with Windows 10 Enterprise 2019/2021 LTSC (see SIMATIC PCS 7 V10.0 Readme for the latest information), floating license for 1 user ***5 languages (English, German, French, Italian, Spanish)*** Without SIMATIC PCS 7 Software Media Package	
• Goods delivery - License key USB flash drive, Certificate of License	6ES7652-5CX78-0YF5

Selection and ordering data (continued)

• Online delivery - License key download, online Certificate of License Note: Email address required! ***ASIA, 2 languages (English, Chinese)*** Without SIMATIC PCS 7 Software Media Package ASIA	6ES7652-5CX78-0YK5
• Goods delivery - ASIA license key USB hardlock, Certificate of License	6ES7652-5CX78-0CF5

Web Option for OS

PCS 7 Web Server Upgrade from V9.x to V10.0	
SIMATIC PCS 7 Web Server Upgrade Package V9.x to V10.0 For SIMATIC PCS 7 Web Server, SIMATIC PCS 7 Web Diagnostics Server, SIMATIC PCS 7 Web Diagnostics Client 6 languages (English, German, French, Italian, Spanish, Chinese), software class A Runs with the following operating systems (see SIMATIC PCS 7 V10.0 Readme for more information): • Windows Server 2019/2022 Standard Edition 64-bit (Web Server/Web Diagnostics Server) • Windows 10 Enterprise 2019/2021 LTSC (Web Diagnostics Client) Single license for 1 installation, without SIMATIC PCS 7 Software Media Package	
• Goods delivery - License key USB flash drive, Certificate of License	6ES7652-5DX78-0YF0
• Online delivery - License key download, online Certificate of License Note: Email address required!	6ES7652-5DX78-0YK0

© Siemens AG 2024

Overview

You can upgrade the following products from V9.x to version V10.0 with the SIMATIC PCS 7 PH/IS Upgrade Package:

- Process Historian and Information Server V9.x (bundle license)
- Process Historian Archive - BATCH V9.x
- Process Historian Server Redundancy V9.x (bundle license, upgrade package is required 2×)
- Information Server V9.x
- Process Historian Server V9.x

Selection and ordering data

PCS 7 Process Historian and Information Server upgrade from V9.x to V10.0	
SIMATIC PCS 7 PH/IS Upgrade Package V9.x to V10.0 5 languages (English, German, French, Italian, Spanish), without software, without documentation, runs with Windows Server 2019 (see SIMATIC PCS 7 V9.1 Readme for the latest information), license key on USB flash drive, Class A	
• Goods delivery License key on USB flash drive, Certificate of License	6ES7652-7AX78-2YE0
• Online delivery License key download, online Certificate of License : Email address required!	6ES7652-7AX78-2YK0
SIMATIC PCS 7 IS Upgrade Package V9.x to V10.0 5 languages (English, German, French, Italian, Spanish), without software, without documentation, runs with Windows Server 2019 (see SIMATIC PCS 7 V9.1 Readme for the latest information), license key on USB flash drive, Class A	
• Goods delivery License key on USB flash drive, Certificate of License	6ES7652-7BX78-2YE0
• Online delivery License key download, online Certificate of License : Email address required!	6ES7652-7BX78-2YK0

© Siemens AG 2024

Overview

Maintenance Station Upgrade Package

Using the SIMATIC PCS 7 Maintenance Station Upgrade Package, you can upgrade the SIMATIC PCS 7 Maintenance Station Runtime Basic Package and the SIMATIC PCS 7 Maintenance Station Engineering from V9.x to V10.0. The SNMP OPC server license is also taken into account for the upgrade.

The cumulative SIMATIC PCS 7 Maintenance Station Runtime licenses are independent of the version. Existing asset TAGs of these licenses are therefore completely available following the upgrade.

Selection and ordering data

SIMATIC PCS 7 Maintenance Station Upgrade from V9.x to V10.0	
SIMATIC PCS 7 Maintenance Station Upgrade Package V9.x to V10.0 for installation on SIMATIC PCS 7 BOX, Single Station or Server 6 languages (English, German, French, Italian, Spanish, Chinese), software class A, runs with Windows 10 Enterprise 2019/2021 LTSC and Windows Server 2019/2022 Standard Edition 64-bit (see SIMATIC PCS 7 V10.0 Readme for more information), single license for 1 installation Without SIMATIC PCS 7 Software Media Package	
• Goods delivery - License key USB flash drive, Certificate of License	**6ES7652-5FX78-0YF0**
• Online delivery - License key download, online Certificate of License	**6ES7652-5FX78-0YK0**
Note: Email address required!	

© Siemens AG 2024

Overview

SIMATIC BATCH Upgrade Packages

Upgrades combined in packages allow you to upgrade existing SIMATIC BATCH systems from V9.x to V10.0:

SIMATIC BATCH Server Upgrade Package

With upgrade licenses for:

- SIMATIC BATCH Server
- SIMATIC BATCH Basic
- SIMATIC BATCH Single Station User
- SIMATIC BATCH Single Station System
- SIMATIC BATCH API
- PCS 7 BCE
- Industrial Ethernet communications software for CP

SIMATIC BATCH Client Upgrade Package

With upgrade licenses for:

- SIMATIC BATCH Client
- SIMATIC BATCH Recipe System

The cumulative SIMATIC BATCH UNITs are independent of the version. Existing UNITs are completely available following the upgrade.

Selection and ordering data

SIMATIC BATCH Upgrade from V9.x to V10.0	
SIMATIC BATCH Server Upgrade Package V9.x to V10.0 6 languages (English, German, French, Italian, Spanish, Chinese), software class A, runs with Windows 10 Enterprise 2019/2021 LTSC or Windows Server 2019/2022 Standard Edition 64-bit (see SIMATIC PCS 7 V10.0 Readme for more information), single license for 1 installation Without SIMATIC PCS 7 Software Media Package	
• Goods delivery - License key USB flash drive, Certificate of License	**6ES7657-5XX78-0YF0**
• Online delivery - License key download, online Certificate of License Note: Email address required!	**6ES7657-5XX78-0YK0**
SIMATIC BATCH Client Upgrade Package V9.x to V10.0 6 languages (English, German, French, Italian, Spanish, Chinese), software class A, runs with Windows 10 Enterprise 2019/2021 LTSC or Windows Server 2019/2022 Standard Edition 64-bit (see SIMATIC PCS 7 V10.0 Readme for the latest information), floating license for 1 user Without SIMATIC PCS 7 Software Media Package	
• Goods delivery - License key USB flash drive, Certificate of License	**6ES7657-5XX78-0YF5**
• Online delivery - License key download, online Certificate of License Note: Email address required!	**6ES7657-5XX78-0YK5**

© Siemens AG 2024

Overview

SIMATIC Route Control Upgrade Packages

With SIMATIC Route Control upgrade packages, you can upgrade Route Control Engineering, Route Control Server and Route Control Center from V9.x to V10.0. The number of existing "Routes" (quantity option for number of simultaneous material transports) is fully available again after the upgrade.

SIMATIC Route Control Center upgrades, which are only available for online delivery, allow you to upgrade the Route Control Center software separately from V9.x to V10.0.

Selection and ordering data

SIMATIC Route Control Upgrade from V9.x to V10.0	
SIMATIC Route Control Upgrade Package V9.x to V10.0 6 languages (English, German, French, Italian, Spanish, Chinese), software class A, runs with Windows 10 Enterprise 2019/2021 LTSC or Windows Server 2019/2022 Standard Edition 64-bit (see SIMATIC PCS 7 V10.0 Readme for more information), single license for 1 installation Without SIMATIC PCS 7 Software Media Package	
• Goods delivery - License key USB flash drive, Certificate of License	**6ES7652-5XX78-0YF0**
• Online delivery - License key download, online Certificate of License Note: Email address required!	**6ES7652-5XX78-0YK0**
SIMATIC Route Control Center Upgrade V9.x to V10.0 6 languages (English, German, French, Italian, Spanish, Chinese), software class A, runs with Windows 10 Enterprise 2019/2021 LTSC or Windows Server 2019/2022 Standard Edition 64-bit (see SIMATIC PCS 7 V10.0 Readme for more information), floating license for 1 user Without SIMATIC PCS 7 Software Media Package	
• Goods delivery - License key USB flash drive, Certificate of License	**6ES7658-7EX78-0YF0**
• Online delivery - License key download, online Certificate of License Note: Email address required!	**6ES7658-7EX78-0YK0**

© Siemens AG 2024

Overview

Operating System Packages for SIMATIC Process Control System IPC

For the SIMATIC Process Control System IPCs listed below, different Operating System Packages are offered to upgrade existing SIMATIC Process Control System IPCs to Microsoft Windows 10 Enterprise 2021 LTSC and Microsoft Windows Server 2022 Standard.

- Operating System Package with Restore USB flash drive: Contains the license label (COA) and the Restore data storage medium for the respective SIMATIC Process Control System IPC
- Operating System Package without Restore USB flash drive: Contains only a license label (COA) for the SIMATIC Process Control System IPC

Upgrading of only one SIMATIC Process Control System IPC requires the package with the Restore USB flash drive.

If multiple SIMATIC Process Control System IPCs are to be upgraded, the costs can be reduced by purchasing the Operating System Packages without Restore USB flash drive.

This means that the package with the Restore USB flash drive is needed at least once. This Restore USB flash drive can then also be used for other SIMATIC Process Control System IPCs of the same type.

Licensing of the other SIMATIC Process Control System IPCs (of the same type) is by acquiring the packages, which contain only the license label (COA).

Of course, the package with the Restore USB flash drive can also be procured for each of the SIMATIC Process Control System IPCs.

Components of packages with Restore USB flash drive:

- Restore data storage medium corresponding to the respective IPC
- License label (COA)
- Certificate of License (COL)

Components of packages without Restore USB flash drive:

- License label (COA)
- Certificate of License (COL)

With the Restore USB flash drive, the operating system is transferred to the SIMATIC Process Control System IPC through the familiar restore process. You can find more information in the supplied documentation and on the Restore USB flash drive.

The SIMATIC Process Control System IPC Operating System Packages require activation (online or by telephone) with Microsoft.

Delivered in a foil envelope. This reduces packaging material and the size of shipping packaging, especially when ordering multiple Operating System Packages.

Selection and ordering data

SIMATIC Process Control System IPC – Operating System Packages

SIMATIC Process Control System IPC – Operating System Packages	
SIMATIC Process Control System IPC547J - Operating System Package Software class B, single license for 1 installation, COA sticker and USB flash drive with Restore Image A1 / A2 (operating system + PCS 7 V10.0); Reference HW: IPC547J - 6ES7660-8*	
• Microsoft® Windows® 10 IoT Enterprise 2021 LTSC, 64-bit	**6ES7650-4MB01-0UD0**
• Microsoft® Windows® Server IoT 2022 Standard, 16-core, 5 clt, 64-bit	**6ES7650-4MB01-0US0**
SIMATIC Process Control System IPC647E / IPC847E - Operating System Package Software class B, single license for 1 installation, COA sticker and USB flash drive with Restore Image A1 / A2 (operating system + PCS 7 V10.0); Reference HW: IPC647E - 6ES7661-0* IPC847E - 6ES7661-1*	
• Microsoft® Windows® 10 IoT Enterprise 2021 LTSC, 64-bit	**6ES7650-4MB01-3UD0**
• Microsoft® Windows® Server IoT 2022 Standard, 16-core, 5 clt, 64-bit	**6ES7650-4MB01-3US0**
SIMATIC Process Control System IPC BX-39A / IPC PX-39A - Operating System Package Software class B, single license for 1 installation, COA sticker and USB flash drive with Restore Image A1 / A2 (operating system + SIMATIC PCS 7 V10.0); Reference HW: IPC BX-39A / IPC PX-39A - 6ES7662-1*	
• Microsoft® Windows® 10 IoT Enterprise 2021 LTSC, 64-bit	**6ES7650-4MB01-2UD0**
SIMATIC Process Control System IPC427E / IPC477E - Operating System Package Software class B, single license for 1 installation, COA sticker and USB flash drive with Restore Image A1 (operating system only); Reference HW: IPC427E / IPC477E - 6ES7 650-0VG..-....	
• Microsoft® Windows® Server IoT 2022 Standard, 16-core, 5 clt, 64-bit	**6ES7650-4MB01-4UD0**

© Siemens AG 2024

Selection and ordering data (continued)

SIMATIC Process Control System IPC - Operating System Packages Software class B, single license for 1 installation, COA sticker and USB flash drive with Restore Image A1 (operating system only); Reference HW: IPC547J - 6ES7660-8* IPC647E - 6ES7661-0*, 6ES7650-0XH03-*YA0; IPC847E - 6ES7661-1*, 6ES7650-0XH03-*YB0; IPC BX-39A / IPC PX-39A - 6ES7662-1* IPC427E / IPC477E - 6ES7 650-0VG..-....	
• Microsoft® Windows® 10 IoT Enterprise 2021 LTSC, 64-bit	**6ES7650-4MB01-8XD0**
SIMATIC Process Control System IPC - Operating System Packages Software class B, single license for 1 installation, COA sticker and USB flash drive with Restore Image A1 / A2 (operating system + SIMATIC PCS 7 V10.0); Reference HW: IPC RC- / RW- / RS-545A - 6ES7661-2* IPC547J - 6ES7660-8* IPC647E - 6ES7661-0*, 6ES7650-0XH03-*YA0; IPC847E - 6ES7661-1*, 6ES7650-0XH03-*YB0	
• Microsoft® Windows® Server IoT 2022 Standard, 16-core, 5 clt, 64-bit	**6ES7650-4MB01-8XS0**

© Siemens AG 2024

Overview

You can learn here about the upgrade packages that are available for upgrading SIMATIC PCS 7 V8.x/V9.0 to V9.1, and the system components that are involved in the various upgrade packages.

The upgrades are divided into:

- Upgrades for Engineering System
- Upgrades for Operator System incl. OpenPCS 7 and Web Option for OS
- Upgrades for Process Historian and Information Server
- Upgrades for Maintenance Station
- Upgrades for SIMATIC BATCH
- Upgrades for SIMATIC Route Control

Products outside the SIMATIC PCS 7 product range

Upgrades for products from the product line of Totally Integrated Automation (TIA) that do not directly belong to the product range of SIMATIC PCS 7 and are therefore subject to their own version cycle are summarized in a separate section "Updates/upgrades asynchronous to PCS 7 version". These include, for example:

- SIMATIC PDM
- Software for Safety Integrated for Process Automation
- S7-PLCSIM simulation software
- Industrial Ethernet communications software for CP

Information is also provided there on the relationship between the various product versions and the SIMATIC PCS 7 versions.

© Siemens AG 2024

Overview

Engineering Upgrade Package AS/OS V9.0 to V9.1

The SIMATIC PCS 7 Engineering System with Engineering Software V9.0 can be upgraded to Version 9.1 using the SIMATIC PCS 7 Engineering Upgrade Package AS/OS.

The licenses included in the Engineering Upgrade Package AS/OS V9.0 to V9.1 apply to the following SIMATIC PCS 7 software products:

- PCS 7 ES Single Station, PCS 7 AS Engineering Software, PCS 7 AS/OS Engineering Software
- PCS 7 Import/Export Assistant
- SIMATIC Version Cross Manager
- SIMATIC Version Trail
- PCS 7 SFC Visualization
- PCS 7 BCE
- SIMATIC Management Console
- Industrial Ethernet communications software for CP

SIMATIC PCS 7 ES Single Station SN ASIA Upgrade Package V9.0 to V9.1

The ASIA regional product variants "SIMATIC PCS 7 ES Single Station SN ASIA" that comes with communications software SOFTNET-RED-CONNECT can be upgraded to V9.1 with the SIMATIC PCS 7 ES Single Station SN ASIA upgrade package specifically designed for this purpose.

SIMATIC PCS 7 Logic Matrix Upgrade

A separate upgrade is available for upgrading the SIMATIC PCS 7 Logic Matrix Viewer to V9.1.

SIMATIC Version Cross Manager Upgrade

The further developed SIMATIC Version Cross Manager V9.1 is available for use in SIMATIC PCS 7 V9.1. The upgrade to SIMATIC Version Cross Manager V9.1 is part of the Engineering Upgrade Package AS/OS V8.x to V9.1.

Advanced Engineering System Upgrade

The SIMATIC PCS 7 Advanced Engineering System V8.0 (incl. SP) can be used in SIMATIC PCS 7 V8.0, V8.1, V8.2, V9.0 and V9.1. Consequently, there is no need to offer a SIMATIC PCS 7 Advanced Engineering System upgrade package for upgrading to V9.1.

Selection and ordering data

Engineering software

Engineering software upgrade from V9.0 to V9.1, based on the existing number of POs	
SIMATIC PCS 7 Engineering Upgrade Package AS/OS V9.0 to V9.1 Software class A, runs with Windows 10 Enterprise 2019 LTSC and Windows Server 2019 Standard Edition 64-bit (see SIMATIC PCS 7 V9.1 Readme for the latest information), floating license for 1 user ***5 languages (English, German, French, Italian, Spanish)*** With SIMATIC PCS 7 Software Media Package	
• Goods delivery License key on USB flash drive, Certificate of License, bundled with 1 × SIMATIC PCS 7 Software Media Package per order item	**6ES7651-8AX68-0YE5**
• Online delivery License key download, online Certificate of License, combined with SIMATIC PCS 7 Software Media Package (software download and online Certificate of License) : Email address required!	**6ES7651-8AX68-0YK5**
ASIA, 2 languages (English, Chinese) With SIMATIC PCS 7 Software Media Package ASIA	
• Goods delivery ASIA license key on USB hardlock, Certificate of License, bundled with 1 × SIMATIC PCS 7 Software Media Package ASIA per order item	**6ES7651-8AX68-0CE5**
SIMATIC PCS 7 ES Single Station SN ASIA Upgrade Package V9.0 to V9.1 (incl. SOFTNET REDCONNECT) 2 languages (English, Chinese), software class A, runs with Windows 10 Enterprise 2019 LTSC and Windows Server 2019 Standard Edition 64-bit (see SIMATIC PCS 7 V9.1 Readme for the latest information), single license for 1 installation Without SIMATIC PCS 7 Software Media Package ASIA • Goods delivery ASIA license key on USB hardlock, Certificate of License	**6ES7651-8AA68-6CE0**
SIMATIC PCS 7 Logic Matrix Upgrade from V9.0 to V9.1	
SIMATIC PCS 7 Logic Matrix Viewer Upgrade from V9.0 to V9.1 Runtime software, 2 languages (English, German), software class A, runs with Windows 10 Enterprise 2019 LTSC and Windows Server 2019 Standard Edition 64-bit (see SIMATIC PCS 7 V9.1 Readme for the latest information), single license for 1 installation Without SIMATIC PCS 7 Software Media Package Goods delivery License key on USB flash drive and Certificate of License	**6ES7658-8JB68-2YE0**

© Siemens AG 2024

Selection and ordering data (continued)

Engineering software upgrade from V8.x to V9.1, based on the existing number of POs	
SIMATIC PCS 7 Engineering Upgrade Package AS/OS V8.x to V9.1 Software class A, runs with Windows 10 Enterprise 2019 LTSC and Windows Server 2019 Standard Edition 64-bit (see SIMATIC PCS 7 V9.1 Readme for the latest information), floating license for 1 user	
5 languages (English, German, French, Italian, Spanish)	
With SIMATIC PCS 7 Software Media Package	
• Goods delivery License key on USB flash drive, Certificate of License, bundled with 1 × SIMATIC PCS 7 Software Media Package per order item	6ES7651-5AX68-0YE5
• Online delivery License key download, online Certificate of License, combined with SIMATIC PCS 7 Software Media Package (software download and online Certificate of License) : Email address required!	6ES7651-5AX68-0YK5
ASIA, 2 languages (English, Chinese)	
With SIMATIC PCS 7 Software Media Package ASIA	
• Goods delivery ASIA license key on USB hardlock, Certificate of License, bundled with 1 × SIMATIC PCS 7 Software Media Package ASIA per order item	6ES7651-5AX68-0CE5
SIMATIC PCS 7 ES Single Station SN ASIA Upgrade Package V8.x to V9.1 (incl. SOFTNET REDCONNECT) 2 languages (English, Chinese), software class A, runs with Windows 10 Enterprise 2019 LTSC and Windows Server 2019 Standard Edition 64-bit (see SIMATIC PCS 7 V9.1 Readme for the latest information), single license for 1 installation Without SIMATIC PCS 7 Software Media Package ASIA • Goods delivery ASIA license key on USB hardlock, Certificate of License	6ES7651-5AA68-6CE0
SIMATIC PCS 7 Logic Matrix Upgrade from V8.2 to V9.1	
SIMATIC PCS 7 Logic Matrix Viewer Upgrade from V8.2 to V9.1 Runtime software, 2 languages (English, German), software class A, runs with Windows 10 Enterprise 2019 LTSC and Windows Server 2019 Standard Edition 64-bit (see SIMATIC PCS 7 V9.1 Readme for the latest information), single license for 1 installation Without SIMATIC PCS 7 Software Media Package Goods delivery License key on USB flash drive and Certificate of License	6ES7658-1JB68-2YE0

© Siemens AG 2024

Overview

Upgrades combined in packages allow existing operator systems to be upgraded from V8.x/V9.0 to V9.1 in line with the number of existing process objects and archive tags.

OS Software Upgrades V8.x/V9.0 to V9.1

The following upgrade packages for upgrading to V9.1 will be offered for SIMATIC PCS 7 Operator Stations with OS software V8.x/V9.0:

- SIMATIC PCS 7 OS Single Station upgrade package
- SIMATIC PCS 7 OS Server upgrade package
- SIMATIC PCS 7 OS Client/SFC Visualization upgrade package

The ASIA product variants "SIMATIC PCS 7 OS Single Station SN ASIA" and "SIMATIC PCS 7 OS Server SN ASIA" that come with SOFTNET-REDCONNECT communication software can be upgraded to V9.1 with specific upgrade packages:

- SIMATIC PCS 7 OS Single Station SN ASIA upgrade package
- SIMATIC PCS 7 OS Server SN ASIA upgrade package

Two upgrade packages of type OS Single Station or OS Server are required in each case for redundant SIMATIC PCS 7 Operator Stations.

In addition to the licenses for the PCS 7 OS Software Single Station or Server, the upgrade packages for OS Single Station and OS Server include upgrade licenses for:

- SIMATIC PCS 7 SFC Visualization
- SIMATIC PCS 7 BCE
- Industrial Ethernet communication software for CP

The upgrade license for SIMATIC PCS 7 SFC Visualization is also part of the upgrade package SIMATIC PCS 7 OS Client/SFC Visualization.

With a SIMATIC PCS 7 OS Server upgrade package, only one SIMATIC PCS 7 OS Server can be upgraded.

Upgrade of the Web Option for OS V8.x/V9.0 to V9.1

Using the SIMATIC PCS 7 OS Web Server upgrade package, you can upgrade the SIMATIC PCS 7 Web Server, SIMATIC PCS 7 Web Diagnostics Server and SIMATIC PCS 7 Web Diagnostics Clients from V8.x/V9.0 to V9.1.

Selection and ordering data

OS software

OS software upgrade from V9.0 to V9.1, based on existing PO number	
SIMATIC PCS 7 OS Single Station Upgrade Package V9.0 to V9.1 For OS Single Station, software class A, runs with Windows 10 Enterprise 2019 LTSC (see SIMATIC PCS 7 V9.1 Readme for the latest information), single license for 1 installation	
5 languages (English, German, French, Italian, Spanish)	
With SIMATIC PCS 7 Software Media Package	
• Goods delivery License key on USB flash drive, Certificate of License, bundled with 1 × SIMATIC PCS 7 Software Media Package per order item	6ES7652-8AX68-0YE0
• Online delivery License key download, online Certificate of License, combined with SIMATIC PCS 7 Software Media Package (software download and online Certificate of License) : Email address required!	6ES7652-8AX68-0YK0
ASIA, 2 languages (English, Chinese)	
With SIMATIC PCS 7 Software Media Package ASIA	
• Goods delivery ASIA license key on USB hardlock, Certificate of License, bundled with 1 × SIMATIC PCS 7 Software Media Package ASIA per order item	6ES7652-8AX68-0CE0
SIMATIC PCS 7 OS Single Station SN ASIA Upgrade Package V9.0 to V9.1 (incl. SOFTNET REDCONNECT) For OS Single Station 2 languages (English, Chinese), software class A, runs with Windows 10 Enterprise 2019 LTSC (see SIMATIC PCS 7 V9.1 Readme for the latest information), single license for 1 installation Without SIMATIC PCS 7 Software Media Package ASIA	
• Goods delivery ASIA license key on USB hardlock, Certificate of License	6ES7658-8AA68-6CE0
SIMATIC PCS 7 OS Server Upgrade Package V9.0 to V9.1 For OS Server Software class A, runs with Windows Server 2019 Standard Edition 64-bit (see SIMATIC PCS 7 V9.1 Readme for the latest information), single license for 1 installation With SIMATIC PCS 7 Software Media Package	
5 languages (English, German, French, Italian, Spanish)	
With SIMATIC PCS 7 Software Media Package	
• Goods delivery License key on USB flash drive, Certificate of License, bundled with 1 × SIMATIC PCS 7 Software Media Package per order item	6ES7652-8BX68-0YE0

© Siemens AG 2024

Selection and ordering data (continued)

• Online delivery License key download, online Certificate of License, combined with SIMATIC PCS 7 Software Media Package (software download and online Certificate of License) : Email address required! ***ASIA, 2 languages (English, Chinese)*** With SIMATIC PCS 7 Software Media Package ASIA	**6ES7652-8BX68-0YK0**
• Goods delivery ASIA license key on USB hardlock, Certificate of License, bundled with 1 × SIMATIC PCS 7 Software Media Package ASIA per order item	**6ES7652-8BX68-0CE0**
SIMATIC PCS 7 OS Server SN ASIA Upgrade Package V9.0 to V9.1 For OS Server 2 languages (English, Chinese), software class A, runs with Windows Server 2019 Standard Edition 64-bit (see SIMATIC PCS 7 V9.1 Readme for the latest information), single license for 1 installation Without SIMATIC PCS 7 Software Media Package ASIA	
• Goods delivery ASIA license key on USB hardlock, Certificate of License	**6ES7658-8BA68-6CE0**
SIMATIC PCS 7 OS Client/SFC Visualization Upgrade Package V9.0 to V9.1 Software class A, runs with Windows 10 Enterprise 2019 LTSC (see SIMATIC PCS 7 V9.1 Readme for the latest information), floating license for 1 user ***5 languages (English, German, French, Italian, Spanish)*** Without SIMATIC PCS 7 Software Media Package	
• Goods delivery License key on USB flash drive, Certificate of License	**6ES7652-8CX68-0YF5**
• Online delivery License key download, online Certificate of License : Email address required! ***ASIA, 2 languages (English, Chinese)*** Without SIMATIC PCS 7 Software Media Package ASIA	**6ES7652-8CX68-0YK5**
• Goods delivery ASIA license key on USB hardlock, Certificate of License	**6ES7652-8CX68-0CF5**
OS software upgrade from V8.x to V9.1, based on the existing number of POs	
SIMATIC PCS 7 OS Single Station Upgrade Package V8.x to V9.1 For OS Single Station, software class A, runs with Windows 10 Enterprise 2019 LTSC (see SIMATIC PCS 7 V9.1 Readme for the latest information), single license for 1 installation ***5 languages (English, German, French, Italian, Spanish)*** With SIMATIC PCS 7 Software Media Package	

Selection and ordering data (continued)

• Goods delivery License key on USB flash drive, Certificate of License, bundled with 1 × SIMATIC PCS 7 Software Media Package per order item	**6ES7652-5AX68-0YE0**
• Online delivery License key download, online Certificate of License, combined with SIMATIC PCS 7 Software Media Package (software download and online Certificate of License) : Email address required! ***ASIA, 2 languages (English, Chinese)*** With SIMATIC PCS 7 Software Media Package ASIA	**6ES7652-5AX68-0YK0**
• Goods delivery ASIA license key on USB hardlock, Certificate of License, bundled with 1 × SIMATIC PCS 7 Software Media Package ASIA per order item	**6ES7652-5AX68-0CE0**
SIMATIC PCS 7 OS Single Station SN ASIA Upgrade Package V8.x to V9.1 (incl. SOFTNET REDCONNECT) For OS Single Station 2 languages (English, Chinese), software class A, runs with Windows 10 Enterprise 2019 LTSC (see SIMATIC PCS 7 V9.1 Readme for the latest information), single license for 1 installation Without SIMATIC PCS 7 Software Media Package ASIA	
• Goods delivery ASIA license key on USB hardlock, Certificate of License	**6ES7658-2AA68-6CE0**
SIMATIC PCS 7 OS Server Upgrade Package V8.x to V9.1 For OS Server Software class A, runs with Windows Server 2019 Standard Edition 64-bit (see SIMATIC PCS 7 V9.1 Readme for the latest information), single license for 1 installation With SIMATIC PCS 7 Software Media Package ***5 languages (English, German, French, Italian, Spanish)*** With SIMATIC PCS 7 Software Media Package	
• Goods delivery License key on USB flash drive, Certificate of License, bundled with 1 × SIMATIC PCS 7 Software Media Package per order item	**6ES7652-5BX68-0YE0**
• Online delivery License key download, online Certificate of License, combined with SIMATIC PCS 7 Software Media Package (software download and online Certificate of License) : Email address required! ***ASIA, 2 languages (English, Chinese)*** With SIMATIC PCS 7 Software Media Package ASIA	**6ES7652-5BX68-0YK0**
• Goods delivery ASIA license key on USB hardlock, Certificate of License, bundled with 1 × SIMATIC PCS 7 Software Media Package ASIA per order item	**6ES7652-5BX68-0CE0**

© Siemens AG 2024

Selection and ordering data (continued)

SIMATIC PCS 7 OS Server SN ASIA Upgrade Package V8.x to V9.1 For OS Server 2 languages (English, Chinese), software class A, runs with Windows Server 2019 Standard Edition 64-bit (see SIMATIC PCS 7 V9.1 Readme for the latest information), single license for 1 installation Without SIMATIC PCS 7 Software Media Package ASIA	
• Goods delivery ASIA license key on USB hardlock, Certificate of License	6ES7658-2BA68-6CE0
SIMATIC PCS 7 OS Client/SFC Visualization Upgrade Package V8.x to V9.1 Software class A, runs with Windows 10 Enterprise 2019 LTSC (see SIMATIC PCS 7 V9.1 Readme for the latest information), floating license for 1 user	
5 languages (English, German, French, Italian, Spanish)	
Without SIMATIC PCS 7 Software Media Package	
• Goods delivery License key on USB flash drive, Certificate of License	6ES7652-5CX68-0YF5
• Online delivery License key download, online Certificate of License : Email address required!	6ES7652-5CX68-0YK5
ASIA, 2 languages (English, Chinese)	
Without SIMATIC PCS 7 Software Media Package ASIA	
• Goods delivery ASIA license key on USB hardlock, Certificate of License	6ES7652-5CX68-0CF5

Web Option for OS

PCS 7 Web Server Upgrade from V9.0 to V9.1	
SIMATIC PCS 7 Web Server Upgrade Package V9.0 to V9.1 For SIMATIC PCS 7 Web Server, SIMATIC PCS 7 Web Diagnostics Server, SIMATIC PCS 7 Web Diagnostics Client 6 languages (English, German, French, Italian, Spanish, Chinese), software class A Runs with the following operating systems (see SIMATIC PCS 7 V9.1 Readme for the latest information): • Windows Server 2019 Standard Edition 64-bit (Web Server/Web Diagnostics Server) • Windows 10 Enterprise 2019 LTSC 64-bit (Web Diagnostics Client) Single license for 1 installation, without SIMATIC PCS 7 Software Media Package	
• Goods delivery License key on USB flash drive, Certificate of License	6ES7652-8DX68-0YF0
• Online delivery License key download, online Certificate of License : Email address required!	6ES7652-8DX68-0YK0

Selection and ordering data (continued)

PCS 7 Web Server Upgrade from V8.x to V9.1	
SIMATIC PCS 7 Web Server Upgrade Package V8.x to V9.1 For SIMATIC PCS 7 Web Server, SIMATIC PCS 7 Web Diagnostics Server, SIMATIC PCS 7 Web Diagnostics Client 6 languages (English, German, French, Italian, Spanish, Chinese), software class A Runs with the following operating systems (see SIMATIC PCS 7 V9.1 Readme for the latest information): • Windows Server 2019 Standard Edition 64-bit (Web Server/Web Diagnostics Server) • Windows 10 Enterprise 2019 LTSC 64-bit (Web Diagnostics Client) Single license for 1 installation, without SIMATIC PCS 7 Software Media Package	
• Goods delivery License key on USB flash drive, Certificate of License	6ES7652-5DX68-0YF0
• Online delivery License key download, online Certificate of License : Email address required!	6ES7652-5DX68-0YK0

© Siemens AG 2024

Overview

You can upgrade the following products from V9.0 to version V9.1 with the SIMATIC PCS 7 PH/IS Upgrade Package:

- Process Historian and Information Server V9.0 (bundle license)
- Process Historian Archive - BATCH V9.0
- Process Historian Server Redundancy V9.0 (bundle license, upgrade package is required 2×)
- Information Server V9.0
- Process Historian Server V9.0

Selection and ordering data

PCS 7 Process Historian and Information Server Upgrade from V9.0 to V9.1	
SIMATIC PCS 7 PH/IS Upgrade Package V9.0 to V9.1 5 languages (English, German, French, Italian, Spanish), without software, without documentation, runs with Windows Server 2019 (see SIMATIC PCS 7 V9.1 Readme for the latest information), license key on USB flash drive, Class A	
• Goods delivery License key on USB flash drive, Certificate of License	**6ES7652-8AX68-2YE0**
• Online delivery License key download, online Certificate of License : Email address required!	**6ES7652-8AX68-2YK0**
SIMATIC PCS 7 IS Upgrade Package V9.0 to V9.1 5 languages (English, German, French, Italian, Spanish), without software, without documentation, runs with Windows Server 2019 (see SIMATIC PCS 7 V9.1 Readme for the latest information), license key on USB flash drive, Class A	
• Goods delivery License key on USB flash drive, Certificate of License	**6ES7652-8BX68-2YE0**
• Online delivery License key download, online Certificate of License : Email address required!	**6ES7652-8BX68-2YK0**

© Siemens AG 2024

Overview

Maintenance Station Upgrade Package

Using the SIMATIC PCS 7 Maintenance Station Upgrade Package, you can upgrade the SIMATIC PCS 7 Maintenance Station Runtime Basic Package and the SIMATIC PCS 7 Maintenance Station Engineering from V8.x to V9.1 and from V9.0 to V9.1. The SNMP OPC server license is also taken into account for the upgrade.

The cumulative SIMATIC PCS 7 Maintenance Station Runtime licenses are independent of the version. Existing asset TAGs of these licenses are therefore completely available following the upgrade.

Selection and ordering data

PCS 7 Maintenance Station Upgrade from V8.x to V9.1	
SIMATIC PCS 7 Maintenance Station Upgrade Package V8.x to V9.1 SIMATIC PCS 7 Maintenance Station Upgrade Package V8.x to V9.1 for installation on SIMATIC PCS 7 BOX, Single Station or Server 6 languages (English, German, French, Italian, Spanish, Chinese), software class A, runs with Windows 10 Enterprise 2019 LTSC and Windows Server 2019 Standard Edition 64-bit (see SIMATIC PCS 7 V9.1 Readme for the latest information), single license for 1 installation Without SIMATIC PCS 7 Software Media Package	
• Goods delivery License key on USB flash drive, Certificate of License	6ES7652-5FX68-0YF0
• Online delivery License key download, online Certificate of License : Email address required!	6ES7652-5FX68-0YK0
PCS 7 Maintenance Station Upgrade from V9.0 to V9.1	
SIMATIC PCS 7 Maintenance Station Upgrade Package V9.0 to V9.1 for installation on SIMATIC PCS 7 BOX, Single Station or Server 6 languages (English, German, French, Italian, Spanish, Chinese), software class A, runs with Windows 10 Enterprise 2019 LTSC and Windows Server 2019 Standard Edition 64-bit (see SIMATIC PCS 7 V9.1 Readme for the latest information), single license for 1 installation Without SIMATIC PCS 7 Software Media Package	
• Goods delivery License key on USB flash drive, Certificate of License	6ES7652-8FX68-0YF0
• Online delivery License key download, online Certificate of License : Email address required!	6ES7652-8FX68-0YK0

© Siemens AG 2024

Overview

SIMATIC BATCH Upgrade Packages

Upgrades combined in packages allow you to upgrade existing SIMATIC BATCH systems from V8.x or V9.0 to V9.1:

SIMATIC BATCH Server Upgrade Package

With upgrade licenses for:

- SIMATIC BATCH Server
- SIMATIC BATCH Basic
- SIMATIC BATCH single station user
- SIMATIC BATCH single station system
- SIMATIC BATCH API
- PCS 7 BCE
- Industrial Ethernet communication software for CP

SIMATIC BATCH Client Upgrade Package

With upgrade licenses for:

- SIMATIC BATCH Client
- SIMATIC BATCH Recipe System

The cumulative SIMATIC BATCH UNITs are independent of the version. Existing UNITs are completely available following the upgrade.

Selection and ordering data

SIMATIC BATCH Upgrade from V9.0 to V9.1	
SIMATIC BATCH Server Upgrade Package V9.0 to V9.1 6 languages (English, German, French, Italian, Spanish, Chinese), software class A, runs with Windows 10 Enterprise 2019 LTSC or Windows Server 2019 Standard Edition 64-bit (see SIMATIC PCS 7 V9.1 Readme for the latest information), single license for 1 installation Without SIMATIC PCS 7 Software Media Package	
• Goods delivery License key on USB flash drive, Certificate of License	6ES7657-8XX68-0YF0
• Online delivery License key download, online Certificate of License : Email address required!	6ES7657-8XX68-0YK0
SIMATIC BATCH Client Upgrade Package V9.0 to V9.1 6 languages (English, German, French, Italian, Spanish, Chinese), software class A, runs with Windows 10 Enterprise 2019 LTSC or Windows Server 2019 Standard Edition 64-bit (see SIMATIC PCS 7 V9.1 Readme for the latest information), floating license for 1 user Without SIMATIC PCS 7 Software Media Package	
• Goods delivery License key on USB flash drive, Certificate of License	6ES7657-8XX68-0YF5
• Online delivery License key download, online Certificate of License : Email address required!	6ES7657-8XX68-0YK5
SIMATIC BATCH Upgrade from V8.x to V9.1	
SIMATIC BATCH Server Upgrade Package V8.x to V9.1 6 languages (English, German, French, Italian, Spanish, Chinese), software class A, runs with Windows 10 Enterprise 2019 LTSC or Windows Server 2019 Standard Edition 64-bit (see SIMATIC PCS 7 V9.1 Readme for the latest information), single license for 1 installation Without SIMATIC PCS 7 Software Media Package	
• Goods delivery License key on USB flash drive, Certificate of License	6ES7657-5XX68-0YF0
• Online delivery License key download, online Certificate of License : Email address required!	6ES7657-5XX68-0YK0

© Siemens AG 2024

Selection and ordering data (continued)

SIMATIC BATCH Client Upgrade Package V8.x to V9.1 6 languages (English, German, French, Italian, Spanish, Chinese), software class A, runs with Windows 10 Enterprise 2019 LTSC or Windows Server 2019 Standard Edition 64-bit (see SIMATIC PCS 7 V9.1 Readme for the latest information), floating license for 1 user Without SIMATIC PCS 7 Software Media Package	
• Goods delivery License key on USB flash drive, Certificate of License	**6ES7657-5XX68-0YF5**
• Online delivery License key download, online Certificate of License : Email address required!	**6ES7657-5XX68-0YK5**

© Siemens AG 2024

Overview

SIMATIC Route Control upgrade packages

With SIMATIC Route Control upgrade packages, you can upgrade Route Control Engineering, Route Control Server and Route Control Center from V8.x to V9.1 and from V9.0 to V9.1. The number of existing "Routes" (quantity option for number of simultaneous material transports) is fully available again after the upgrade.

SIMATIC Route Control Center upgrades, which are only available for online delivery, allow you to upgrade the Route Control Center software separately from V8.x to V9.1 and from v9.0 to V9.1.

Selection and ordering data

SIMATIC Route Control Upgrade from V8.x to V9.1	
SIMATIC Route Control Upgrade Package V8.x to V9.1 6 languages (English, German, French, Italian, Spanish, Chinese), software class A, runs with Windows 10 Enterprise 2019 LTSC or Windows Server 2019 Standard Edition 64-bit (see SIMATIC PCS 7 V9.1 Readme for the latest information), single license for 1 installation Without SIMATIC PCS 7 Software Media Package	
• Goods delivery License key on USB flash drive, Certificate of License	6ES7652-5XX68-0YF0
• Online delivery License key download, online Certificate of License : Email address required!	6ES7652-5XX68-0YK0
SIMATIC Route Control Center Upgrade V8.x to V9.1 6 languages (English, German, French, Italian, Spanish, Chinese), software class A, runs with Windows 10 Enterprise 2019 LTSC or Windows Server 2019 Standard Edition 64-bit (see SIMATIC PCS 7 V9.1 Readme for the latest information), floating license for 1 user Without SIMATIC PCS 7 Software Media Package	
• Online delivery License key download, online Certificate of License : Email address required!	6ES7658-7EX68-0YK0
SIMATIC Route Control Upgrade from V9.0 to V9.1	
SIMATIC Route Control Upgrade Package V9.0 to V9.1 6 languages (English, German, French, Italian, Spanish, Chinese), software class A, runs with Windows 10 Enterprise 2019 LTSC or Windows Server 2019 Standard Edition 64-bit (see SIMATIC PCS 7 V9.1 Readme for the latest information), single license for 1 installation Without SIMATIC PCS 7 Software Media Package	
• Goods delivery License key on USB flash drive, Certificate of License	6ES7652-8XX68-0YF0

Selection and ordering data (continued)

• Online delivery License key download, online Certificate of License : Email address required!	6ES7652-8XX68-0YK0
SIMATIC Route Control Center Upgrade V9.0 to V9.1 6 languages (English, German, French, Italian, Spanish, Chinese), software class A, runs with Windows 10 Enterprise 2019 LTSC or Windows Server 2019 Standard Edition 64-bit (see SIMATIC PCS 7 V9.1 Readme for the latest information), floating license for 1 user Without SIMATIC PCS 7 Software Media Package	
• Online delivery License key download, online Certificate of License : Email address required!	6ES7658-8EX68-0YK0

© Siemens AG 2024

Operating System Packages for SIMATIC Process Control System IPC

Overview

Operating System Packages for SIMATIC Process Control System IPC

For the SIMATIC Process Control System IPCs listed below, different Operating System Packages are offered to upgrade existing SIMATIC Process Control System IPCs to Microsoft Windows 10 Enterprise 2019 LTSC and Microsoft Windows Server 2019 Standard.

- Operating System Package with Restore USB flash drive: Contains the license label (COA) and the Restore data storage medium for the respective SIMATIC Process Control System IPC
- Operating System Package without Restore USB flash drive: Contains only a license label (COA) for the SIMATIC Process Control System IPC

Upgrading of only one SIMATIC Process Control System IPC requires the package with the Restore USB flash drive.

If multiple SIMATIC Process Control System IPCs are to be upgraded, the costs can be reduced by purchasing the Operating System Packages without Restore USB flash drive.

This means that the package with the Restore USB flash drive is needed at least once. This Restore USB flash drive can then also be used for other SIMATIC Process Control System IPCs of the same type.

Licensing of the other SIMATIC Process Control System IPCs (of the same type) is by acquiring the packages, which contain only the license label (COA).

Of course, the package with the Restore USB flash drive can also be procured for each of the SIMATIC Process Control System IPCs.

Components of packages with Restore USB Flash Drive:

- Restore data storage medium corresponding to the respective IPC
- License label (COA)
- Certificate of License (COL)

Components of packages without Restore USB Flash Drive:

- License label (COA)
- Certificate of License (COL)

With the Restore USB flash drive, the operating system is transferred to the SIMATIC Process Control System IPC through the familiar restore process. You can find more information in the supplied documentation and on the Restore USB flash drive.

The SIMATIC Process Control System IPC Operating System Packages require activation (online or by telephone) with Microsoft.

Delivered in a foil envelope. This reduces packaging material and the size of shipping packaging, especially when ordering multiple Operating System Packages.

Selection and ordering data

SIMATIC Process Control System IPC – Operating System Packages

SIMATIC Process Control System IPC – Operating System Packages	
SIMATIC Process Control System IPC547G - Operating System Package Software class B, single license for 1 installation COA sticker and USB flash drive with Restore Image A1 (operating system only) Reference HW: IPC547G - 6ES7660-7*	
• Microsoft Windows 10 IoT Enterprise 2019 LTSC, 64-bit	**6ES7650-4MB00-0UA0**
• Microsoft Windows Server IoT 2019 Standard, 16-core, 5 clt, 64-bit	**6ES7650-4MB00-0UB0**
SIMATIC Process Control System IPC647D / IPC847D - Operating System Package Software class B, single license for 1 installation COA sticker and USB flash drive with Restore Image A1 (operating system only) Reference HW: IPC647D - 6ES7660-5* IPC847D - 6ES7660-6*	
• Microsoft Windows 10 IoT Enterprise 2019 LTSC, 64-bit	**6ES7650-4MB00-1UA0**
• Microsoft Windows Server IoT 2019 Standard, 16-core, 5 clt, 64-bit	**6ES7650-4MB00-1UB0**
SIMATIC Process Control System IPC647E / IPC847E - Operating System Package Software class B, single license for 1 installation COA sticker and USB flash drive with Restore Image A1 / A2 (operating system + SIMATIC PCS 7 V9.1) Reference HW: IPC647E - 6ES7661-0*, 6ES7650-0XH03-*YA0; IPC847E - 6ES7661-1*, 6ES7650-0XH03-*YB0	
• Microsoft Windows 10 IoT Enterprise 2019 LTSC, 64-bit	**6ES7650-4MB00-3UA0**
• Microsoft Windows Server IoT 2019 Standard, 16-core, 5 clt, 64-bit	**6ES7650-4MB00-3UB0**
SIMATIC Process Control System IPC627D / IPC677D - Operating System Package Software class B, single license for 1 installation COA sticker and USB flash drive with Restore Image A1 (operating system only) Reference HW: IPC627D / IPC677D - 6ES7650-4B*	
• Microsoft Windows 10 IoT Enterprise 2019 LTSC, 64-bit	**6ES7650-4MB00-2UA0**

© Siemens AG 2024

Selection and ordering data (continued)

SIMATIC Process Control System IPC427E / IPC477E - Operating System Package Software class B, single license for 1 installation COA sticker and USB flash drive with Restore Image A1 / A2 (operating system + SIMATIC PCS 7 V9.1) Reference HW: IPC427E / IPC477E - 6ES7650-0VG*	
• Microsoft Windows 10 IoT Enterprise 2019 LTSC, 64-bit	**6ES7650-4MB00-4UA0**
SIMATIC Process Control System IPC - Operating System Packages Software class B, single license for 1 installation COA sticker only (**without** Restore USB flash drive)	
• Microsoft Windows 10 IoT Enterprise 2019 LTSC, 64-bit Reference HW: IPC547G - 6ES7660-7* IPC647D - 6ES7660-5* IPC847D - 6ES7660-6* IPC647E - 6ES7661-0*, 6ES7650-0XH03-.YA0 IPC847E - 6ES7661-1*, 6ES7650-0XH03-.YB0 IPC627D / IPC677D - 6ES7650-4B* IPC427E / IPC477E - 6ES7650-0VG*	**6ES7650-4MB00-8XA0**
• Microsoft Windows Server IoT 2019 Standard, 16-core, 5 clt, 64-bit Reference HW: IPC547G - 6ES7660-7* IPC647D - 6ES7660-5* IPC847D - 6ES7660-6* IPC647E - 6ES7661-0*, 6ES7650-0XH03-.YA0 IPC847E - 6ES7661-1*, 6ES7650-0XH03-.YB0	**6ES7650-4MB00-8XB0**

© Siemens AG 2024

Overview

You can learn here about the upgrade packages that are available for upgrading SIMATIC PCS 7 V8.x to V9.0, and the system components that are involved in the various upgrade packages.

The upgrades are divided into:

- Upgrades for Engineering System and Management Console
- Upgrades for Operator System including OpenPCS 7 and Web Option for OS
- Upgrades for Process Historian and Information Server
- Upgrades for Maintenance Station
- Upgrades for SIMATIC BATCH
- Upgrades for SIMATIC Route Control

Products outside the SIMATIC PCS 7 product range

Upgrades for products from the product line of Totally Integrated Automation (TIA) that do not directly belong to the product range of SIMATIC PCS 7 and are therefore subject to their own version cycle are summarized in a separate Section "Updates/upgrades asynchronous to PCS 7 version". These include, for example:

- SIMATIC PDM
- Software for Safety Integrated for Process Automation
- S7-PLCSIM simulation software
- Industrial Ethernet communication software for CP

Information is also provided there on the relationship between the various product versions and the SIMATIC PCS 7 versions.

© Siemens AG 2024

Overview

Engineering upgrade package AS/OS V8.x to V9.0

The SIMATIC PCS 7 Engineering System with Engineering Software V8.x and Management Console V8.x can be upgraded to Version 9.0 using the SIMATIC PCS 7 Engineering upgrade package AS/OS.

The licenses included in the Engineering upgrade package AS/OS V8.x to V9.0 apply to the following SIMATIC PCS 7 software products:

- PCS 7 ES Single Station, PCS 7 AS Engineering Software, PCS 7 AS/OS Engineering Software
- PCS 7 Import-Export Assistant
- SIMATIC Version Cross Manager
- SIMATIC Version Trail
- PCS 7 SFC Visualization
- PCS 7 BCE
- PCS 7 Management Console
- Industrial Ethernet communication software for CP

SIMATIC PCS 7 ES Single Station SN ASIA upgrade package V8.x to V9.0

The ASIA regional product version "SIMATIC PCS 7 ES Single Station SN ASIA" that comes with communication software SOFTNET-RED-CONNECT can be upgraded to V9.0 with the SIMATIC PCS 7 ES single station SN ASIA upgrade package specifically designed for this purpose.

SIMATIC PCS 7 Logic Matrix Upgrade

A separate upgrade is available for upgrading the SIMATIC PCS 7 Logic Matrix Viewer to V9.0.

SIMATIC Version Cross Manager Upgrade

The further developed SIMATIC Version Cross Manager V9.0 is available for use in SIMATIC PCS 7 V9.0. The upgrade to SIMATIC Version Cross Manager V9.0 is part of the Engineering upgrade package AS/OS V8.x to V9.0.

Advanced Engineering System Upgrade

The SIMATIC PCS 7 Advanced Engineering System V8.0 (incl. SP) can be used in SIMATIC PCS 7 V8.0, V8.1, V8.2 and V9.0. Consequently, there is no need to offer a SIMATIC PCS 7 Advanced Engineering System upgrade package for upgrading to V9.0.

Selection and ordering data

Engineering software

Engineering Software Upgrade from V8.x to V9.0, based on the existing number of POs	
SIMATIC PCS 7 Engineering upgrade package AS/OS V8.x to V9.0 Software class A, runs with Windows 7 Ultimate 64-bit, Windows 10 Enterprise 2015 LTSB 64-bit or Windows Server 2012 R2 Standard 64-bit (see SIMATIC PCS 7 V9.0 Readme for the latest information), floating license for 1 user	
5 languages (English, German, French, Italian, Spanish)	
With SIMATIC PCS 7 Software Media Package	
• Goods delivery License key on USB flash drive, certificate of license, bundled with 1 × SIMATIC PCS 7 Software Media Package per order item	6ES7651-5AX58-0YE5
• Online delivery License key download, online certificate of license, combined with SIMATIC PCS 7 Software Media Package (software download and online certificate of license) : Email address required!	6ES7651-5AX58-0YK5
ASIA, 2 languages (English, Chinese)	
With SIMATIC PCS 7 Software Media Package ASIA	
• Goods delivery ASIA license key on USB hardlock, certificate of license, bundled with 1 × SIMATIC PCS 7 Software Media Package ASIA per order item	6ES7651-5AX58-0CE5
SIMATIC PCS 7 ES Single Station SN ASIA upgrade package V8.x to V9.0 (including SOFTNET REDCONNECT) 2 languages (English, Chinese), software class A, runs with Windows 7 Ultimate 64-bit, Windows 10 Enterprise 2015 LTSB 64-bit or Windows Server 2012 R2 Standard 64-bit (see SIMATIC PCS 7 V9.0 Readme for the latest information), single license for 1 installation Without SIMATIC PCS 7 Software Media Package ASIA • Goods delivery ASIA license key on USB hardlock, certificate of license	6ES7651-5AA58-6CE0
SIMATIC PCS 7 Logic Matrix Upgrade from V8.2 to V9.0	
SIMATIC PCS 7 Logic Matrix Viewer Upgrade from V8.2 to V9.0 Runtime software, 2 languages (English, German), software class A, runs with Windows 7 Ultimate 64-bit, Windows 10 Enterprise 2015 LTSB 64-bit or Windows Server 2012 R2 Standard 64-bit (see SIMATIC PCS 7 V9.0 Readme for the latest information), single license for 1 installation Without SIMATIC PCS 7 Software Media Package Goods delivery License key on USB flash drive and certificate of license	6ES7658-1JB58-2YE0

© Siemens AG 2024

Overview

Upgrades combined in packages allow existing Operator Systems to be upgraded from V8.x to V9.0 in line with the number of existing process objects and archive tags.

OS software upgrades from V8.x to V9.0

The following upgrade packages for upgrading to V9.0 will be offered for SIMATIC PCS 7 operator stations with OS software V8.x:

- SIMATIC PCS 7 OS Single Station upgrade package
- SIMATIC PCS 7 OS Server upgrade package
- SIMATIC PCS 7 OS Client/SFC Visualization upgrade package

The ASIA product versions "SIMATIC PCS 7 OS Single Station SN ASIA" and "SIMATIC PCS 7 OS Server SN ASIA" that come with communication software SOFTNET-REDCONNECT can be upgraded to V9.0 with specific upgrade packages:

- SIMATIC PCS 7 OS Single Station SN ASIA upgrade package
- SIMATIC PCS 7 OS Server SN ASIA upgrade package

Two upgrade packages of type OS Single Station or OS Server are required in each case for redundant SIMATIC PCS 7 Operator Stations.

In addition to the licenses for the PCS 7 OS Software Single Station or Server, the upgrade packages for OS Single Station and OS Server include upgrade licenses for:

- SIMATIC PCS 7 SFC Visualization
- SIMATIC PCS 7 BCE
- Industrial Ethernet communication software for CP
- SIMATIC PCS 7 OpenPCS 7 and SIMATIC PCS 7 OpenPCS 7/OS Client

The upgrade license for SIMATIC PCS 7 SFC Visualization is also part of the upgrade package SIMATIC PCS 7 OS Client/SFC Visualization.

With a SIMATIC PCS 7 OS Server upgrade package, only one SIMATIC PCS 7 OS Server can be upgraded.

Upgrade of the Web Option for OS

Using the SIMATIC PCS 7 OS Web Server upgrade package, you can upgrade the SIMATIC PCS 7 Web server, SIMATIC PCS 7 Web diagnostics server and SIMATIC PCS 7 Web diagnostics clients from V8.x to V9.0.

Selection and ordering data

OS software

OS software upgrade from V8.x to V9.0, based on the existing number of POs	
SIMATIC PCS 7 OS single station upgrade package V8.x to V9.0 For OS single station, software class A, runs with Windows 7 Ultimate 64-bit or Windows 10 Enterprise 2015 LTSB 64-bit (see SIMATIC PCS 7 V9.0 Readme for the latest information), single license for 1 installation	
5 languages (English, German, French, Italian, Spanish)	
With SIMATIC PCS 7 Software Media Package	
• Goods delivery License key on USB flash drive, certificate of license, bundled with 1 × SIMATIC PCS 7 Software Media Package per order item	**6ES7652-5AX58-0YE0**
• Online delivery License key download, online certificate of license, combined with SIMATIC PCS 7 Software Media Package (software download and online certificate of license) : Email address required!	**6ES7652-5AX58-0YK0**
ASIA, 2 languages (English, Chinese)	
With SIMATIC PCS 7 Software Media Package ASIA	
• Goods delivery ASIA license key on USB hardlock, certificate of license, bundled with 1 × SIMATIC PCS 7 Software Media Package ASIA per order item	**6ES7652-5AX58-0CE0**
SIMATIC PCS 7 OS Single Station SN ASIA upgrade package V8.x to V9.0 (including SOFTNET REDCONNECT) For OS Single Station 2 languages (English, Chinese), software class A, runs with Windows 7 Ultimate 64-bit or Windows 10 Enterprise 2015 LTSB 64-bit (see SIMATIC PCS 7 V9.0 Readme for the latest information), single license for 1 installation Without SIMATIC PCS 7 Software Media Package ASIA	
• Goods delivery ASIA license key on USB hardlock, certificate of license	**6ES7658-2AA58-6CE0**

© Siemens AG 2024

Selection and ordering data (continued)

SIMATIC PCS 7 OS Server upgrade package V8.x to V9.0 For OS Server Software class A, runs with Windows Server 2012 R2 Standard 64-bit (see SIMATIC PCS 7 V9.0 Readme for the latest information), single license for 1 installation With SIMATIC PCS 7 Software Media Package ***5 languages (English, German, French, Italian, Spanish)*** With SIMATIC PCS 7 Software Media Package	
• Goods delivery License key on USB flash drive, certificate of license, bundled with 1 × SIMATIC PCS 7 Software Media Package per order item	6ES7652-5BX58-0YE0
• Online delivery License key download, online certificate of license, combined with SIMATIC PCS 7 Software Media Package (software download and online certificate of license) : Email address required!	6ES7652-5BX58-0YK0
ASIA, 2 languages (English, Chinese) With SIMATIC PCS 7 Software Media Package ASIA	
• Goods delivery ASIA license key on USB hardlock, certificate of license, bundled with 1 × SIMATIC PCS 7 Software Media Package ASIA per order item	6ES7652-5BX58-0CE0
SIMATIC PCS 7 OS Server SN ASIA upgrade package V8.x to V9.0 For OS Server 2 languages (English, Chinese), software class A, runs with Windows Server 2012 R2 Standard 64-bit (see SIMATIC PCS 7 V9.0 Readme for the latest information), single license for 1 installation Without SIMATIC PCS 7 Software Media Package ASIA	
• Goods delivery ASIA license key on USB hardlock, certificate of license	6ES7658-2BA58-6CE0
SIMATIC PCS 7 OS Client/SFC Visualization upgrade package V8.x to V9.0 Software class A, runs with Windows 7 Ultimate 64-bit, Windows 10 Enterprise 2015 LTSB 64-bit or Windows Server 2012 R2 Standard 64-bit (see SIMATIC PCS 7 V9.0 Readme for the latest information), floating license for 1 user ***5 languages (English, German, French, Italian, Spanish)*** Without SIMATIC PCS 7 Software Media Package	
• Goods delivery License key on USB flash drive, certificate of license	6ES7652-5CX58-0YF5
• Online delivery License key download, online certificate of license : Email address required!	6ES7652-5CX58-0YK5
ASIA, 2 languages (English, Chinese) Without SIMATIC PCS 7 Software Media Package ASIA	
• Goods delivery ASIA license key on USB hardlock, certificate of license	6ES7652-5CX58-0CF5

Web Option for OS

PCS 7 Web Server Upgrade from V8.x to V9.0	
SIMATIC PCS 7 Web Server upgrade package V8.x to V9.0 For SIMATIC PCS 7 Web Server, SIMATIC PCS 7 Web Diagnostics Server, SIMATIC PCS 7 Web Diagnostics client 6 languages (English, German, French, Italian, Spanish, Chinese), software class A Runs with the following operating systems (see SIMATIC PCS 7 V9.0 Readme for latest information): • Windows Server 2012 R2 Standard 64-bit (Web server/Web diagnostics server) • Windows 7 Ultimate 64-bit, Windows 10 Enterprise 2015 LTSB 64-bit (Web diagnostics client) Single license for 1 installation, without SIMATIC PCS 7 Software Media Package	
• Goods delivery License key on USB flash drive, certificate of license	6ES7652-5DX58-0YF0
• Online delivery License key download, online certificate of license : Email address required!	6ES7652-5DX58-0YK0

© Siemens AG 2024

Upgrades for Process Historian and Information Server

Overview

You can upgrade the following products from V8.x to version V9.0 with the SIMATIC PCS 7 PH/IS Upgrade Package:

- Process Historian and Information Server V8.0/V8.1/V8.2 (bundle license)
- Process Historian Archive - BATCH V8.0/V8.1/V8.2
- Process Historian Server Redundancy V8.0/V8.1/V8.2 (bundle license, upgrade package is required 2×)
- Information Server V8.0
- Process Historian Server V8.0

Selection and ordering data

PCS 7 Process Historian and Information Server upgrade from V8.x to V9.0	
SIMATIC PCS 7 PH/IS Upgrade Package V8.x to V9.0 5 languages (English, German, French, Italian, Spanish), software class A, runs with Windows Server 2012 R2 Standard 64-bit (see SIMATIC PCS 7 V9.0 Readme for latest information), single license for 1 installation Without SIMATIC PCS 7 Software Media Package	
• Goods delivery License key on USB flash drive, certificate of license	6ES7652-7AX58-2YE0
• Online delivery License key download, online certificate of license : Email address required!	6ES7652-7AX58-2YK0

© Siemens AG 2024

Overview

Maintenance Station Upgrade Package

Using the SIMATIC PCS 7 Maintenance Station Upgrade Package, you can upgrade the SIMATIC PCS 7 Maintenance Station Runtime Basic Package and the SIMATIC PCS 7 Maintenance Station Engineering from V8.x to V9.0. The SNMP OPC server license is also taken into account for the upgrade.

The cumulative SIMATIC PCS 7 Maintenance Station Runtime licenses are independent of the version. Existing asset TAGs of these licenses are therefore completely available following the upgrade.

Selection and ordering data

PCS 7 Maintenance Station upgrade from V8.x to V9.0	
SIMATIC PCS 7 Maintenance Station Upgrade Package V8.x to V9.0 For installation on SIMATIC PCS 7 BOX, single station or server 6 languages (English, German, French, Italian, Spanish, Chinese), software class A, runs with Windows 7 Ultimate 64-bit, Windows 10 Enterprise 2015 LTSB 64-bit or Windows Server 2012 R2 Standard 64-bit, single license for 1 installation Without SIMATIC PCS 7 Software Media Package	
• Goods delivery License key on USB flash drive, certificate of license	**6ES7652-5FX58-0YF0**
• Online delivery License key download, online certificate of license : Email address required!	**6ES7652-5FX58-0YK0**

© Siemens AG 2024

Overview

SIMATIC BATCH Upgrade Packages

Upgrades combined in packages allow you to upgrade existing SIMATIC BATCH systems from V8.x to V9.0:

SIMATIC BATCH Server Upgrade Package

With upgrade licenses for:

- SIMATIC BATCH Server
- SIMATIC BATCH Basic
- SIMATIC BATCH Single Station User
- SIMATIC BATCH Single Station System
- SIMATIC BATCH API
- PCS 7 BCE
- Industrial Ethernet communication software for CP

SIMATIC BATCH Client upgrade package

With upgrade licenses for:

- SIMATIC BATCH Client
- SIMATIC BATCH Recipe System

The cumulative SIMATIC BATCH UNITs are independent of the version. Existing UNITs are completely available following the upgrade.

Selection and ordering data

SIMATIC BATCH upgrade from V8.x to V9.0	
SIMATIC BATCH Server Upgrade Package V8.x to V9.0 6 languages (English, German, French, Italian, Spanish, Chinese), software class A, runs with Windows 7 Ultimate 64-bit, Windows 10 Enterprise 2015 LTSB 64 Bit or Windows Server 2012 R2 Standard 64-bit (see SIMATIC PCS 7 V9.0 Readme for the latest information), single license for 1 installation Without SIMATIC PCS 7 Software Media Package	
• Goods delivery License key on USB flash drive, certificate of license	6ES7657-5XX58-0YF0
• Online delivery License key download, online certificate of license : Email address required!	6ES7657-5XX58-0YK0
SIMATIC BATCH Client Upgrade Package V8.x to V9.0 6 languages (English, German, French, Italian, Spanish, Chinese), software class A, runs with Windows 7 Ultimate 64-bit, Windows 10 Enterprise 2015 LTSB 64 Bit or Windows Server 2012 R2 Standard 64-bit (see SIMATIC PCS 7 V9.0 Readme for the latest information), floating license for 1 user Without SIMATIC PCS 7 Software Media Package	
• Goods delivery License key on USB flash drive, certificate of license	6ES7657-5XX58-0YF5
• Online delivery License key download, online certificate of license : Email address required!	6ES7657-5XX58-0YK5

© Siemens AG 2024

Overview

SIMATIC Route Control Upgrade Packages

With SIMATIC Route Control Upgrade Packages, you can upgrade Route Control Engineering, Route Control Server and Route Control Center from V8.x to V9.0. The number of existing "Routes" (quantity option for number of simultaneous material transports) is fully available again after the upgrade.

SIMATIC Route Control Center upgrades, which are only available for online delivery, allow you to upgrade the Route Control Center software separately from V8.x to V9.0.

Selection and ordering data

SIMATIC Route Control upgrade from V8.x to V9.0	
SIMATIC Route Control Upgrade Package V8.x to V9.0 6 languages (English, German, French, Italian, Spanish, Chinese), software class A, runs with Windows 7 Ultimate 64-bit, Windows 10 Enterprise 2015 LTSB 64 Bit or Windows Server 2012 R2 Standard 64-bit (see SIMATIC PCS 7 V9.0 Readme for the latest information), single license for 1 installation Without SIMATIC PCS 7 Software Media Package	
• Goods delivery License key on USB flash drive, certificate of license	6ES7652-5XX58-0YF0
• Online delivery License key download, online certificate of license : Email address required!	6ES7652-5XX58-0YK0
SIMATIC Route Control Center upgrade V8.x to V9.0 6 languages (English, German, French, Italian, Spanish, Chinese), software class A, runs with Windows 7 Ultimate 64-bit, Windows 10 Enterprise 2015 LTSB 64 Bit or Windows Server 2012 R2 Standard 64-bit (see SIMATIC PCS 7 V9.0 Readme for the latest information), floating license for 1 user Without SIMATIC PCS 7 Software Media Package	
• Online delivery License key download, online certificate of license : Email address required!	6ES7658-7EX58-0YK0

© Siemens AG 2024

Upgrades for SIMATIC Logon

Overview

SIMATIC Logon is a central user administration system with access control which was introduced into the process control system as of SIMATIC PCS 7 V6.0. Up to and including V6.1, SIMATIC Logon was offered in the form of separate products whose version cycle was asynchronous to the version cycle of SIMATIC PCS 7.

As of SIMATIC PCS 7 V7.0, the SIMATIC Logon software and licenses are fully integrated in the process control system. Since then, updating is carried out synchronous with SIMATIC PCS 7.

With the online compatibility tool, you can determine the SIMATIC Logon versions that are suitable for the various SIMATIC PCS 7 versions:

Selection and ordering data

SIMATIC Logon Upgrade to V1.6 7 languages (English, German, French, Italian, Spanish, Chinese and Japanese), software class A Runs with the following operating systems • Windows Vista (Business/Enterprise/Ultimate) up to SP2 32/64-bit • Windows 7 (Professional/Enterprise/Ultimate) up to SP1 32/64-bit • Windows 8.0 (Standard/Pro/Enterprise) 32/64-bit • Windows 8.1 (Standard/Pro/Enterprise) 32/64-bit • Windows 10 Enterprise 2015 LTSB 64-bit • Windows Server 2003 SP1/SP2 32-bit • Windows Server 2003 R2/2003 R2 SP2 32-bit • Windows Server 2008 (Standard/Enterprise/Datacenter) up to SP2 32/64-bit • Windows Server 2008 R2 (Standard/Enterprise/Datacenter) up to SP1 64-bit • Windows Server 2012 (Foundation/Essentials/Standard/Datacenter) 64-bit • Windows Server 2012 R2 (Essentials/Standard/Datacenter) 64-bit Single license for 1 installation Goods delivery: License key on USB flash drive, Certificate of License, software and electronic documentation on CD	6ES7658-7BX61-0YE0

SIMATIC Logon Upgrade V1.5/1.6 to V2.0 7 languages (English, German, French, Italian, Spanish, Chinese and Japanese), software class A Runs with the following operating systems • Windows 10 • Windows Server 2016 • Windows Server 2019 Single license for 1 installation Goods delivery: License key on USB flash drive, Certificate of License, software and electronic documentation on USB	6ES7658-7BX02-0YE0

© Siemens AG 2024

Overview

SIMATIC PDM can be integrated in the engineering system, i.e. in the configuration environment of SIMATIC PCS 7, or operated in stand-alone mode. The version cycle of SIMATIC PDM is asynchronous to the version cycle of SIMATIC PCS 7:

The following overview shows some of the SIMATIC PDM versions and the compatible SIMATIC PCS 7 versions:

SIMATIC PDM version	Compatible SIMATIC PCS 7 version
V9.2	V8x, V9x
V9.1	V9.0
V9.0	V8.2 V8.1, V8.1+SP1 V8.0+SP2 (without Communication FOUNDATION Fieldbus)
V8.2	V8.0+SP2, V8.1, V8.1+SP1
V8.1	V8.0, V8.0+SP1/SP2
V6.1	V6.1, V7.1 and V8.0

The compatibility tool on the internet provides detailed information on how the various SIMATIC PCS 7 versions correlate with the versions of SIMATIC PDM:

https://support.industry.siemens.com/cs/de/en/view/64847781

Existing installations with SIMATIC PDM V7.0 can only be upgraded to version 8.0 by first upgrading to version 9.2. Projects based on SIMATIC PDM V8.x/V9.0 (including SP in each case) can be upgraded straight to V9.2 with upgrade packages. Alternatively, an upgrade is also possible via the Software Update Service (for details, see "Software Media and Logistics" chapter, "Software Update Service" section).

Two upgrade packages are offered for SIMATIC PDM V8.x/V9.0:

- SIMATIC PDM Upgrade Package Basic[1)] (with/without SIMATIC PDM HART Server option) for configurations based on:
  - SIMATIC PDM Basic
  - SIMATIC PDM Service
  - SIMATIC PDM S7
  - SIMATIC PDM PCS 7
- SIMATIC PDM Upgrade Package Complete[1)] for configurations based on:
  - SIMATIC PDM PCS 7 Server
  - SIMATIC PDM PCS 7-FF

1) Optional product components for SIMATIC PDM such as PDM Extended, PDM Integration in STEP 7/PCS 7, PDM Routing, PDM Server and PDM Communication FOUNDATION Fieldbus are each included in a product package listed in the SIMATIC PDM Upgrade Package Basic or SIMATIC PDM Upgrade Package Complete and are implicitly authorized to be updated via the corresponding license. The SIMATIC PDM Upgrade Package Complete is required for use of the product components PDM Server or PDM Communication FOUNDATION Fieldbus.

Selection and ordering data

SIMATIC PDM Upgrade/Update Service	
SIMATIC PDM Upgrade Package V6.x to V9.1 For product packages and optional product components of SIMATIC PDM V6.0/V6.1 6 languages (English, German, French, Italian, Spanish, Chinese), software class A, runs with Windows 7 Ultimate 64-bit, Windows 10 Enterprise 2015 LTSB 64-bit, Windows Server 2008 R2 Standard 64-bit or Windows Server 2012 R2 Standard 64-bit (see SIMATIC PDM V9.1 Readme for latest information), floating license for 1 user Without SIMATIC PCS 7 Software Media Package	
• Goods delivery License key on USB flash drive and Certificate of License, bundled with 1 × SIMATIC PDM Software Media Package per order item	6ES7651-5CX68-0YE5
• Online delivery License key download and online Certificate of License combined with SIMATIC PDM Software Media Package (SIMATIC PDM and device library software download) : Email address required!	6ES7651-5CX68-0YK5
SIMATIC PDM Upgrade Package Basic from V8.x/V9.x to V9.2 For configurations based on SIMATIC PDM Basic, Service, S7, PCS 7 (with/without SIMATIC PDM HART Server) 6 languages (English, German, French, Italian, Spanish, Chinese), software class A, runs with Windows 10 Enterprise 2019 LTSB 64-bit or Windows Server 2019 Standard Edition 64-bit (see SIMATIC PDM V9.1 Readme for the latest information), floating license for 1 user Without SIMATIC PCS 7 Software Media Package	
• Goods delivery License key on USB flash drive and Certificate of License, bundled with 1 × SIMATIC PDM Software Media Package per order item	6ES7651-5EX78-0YE5
SIMATIC PDM Upgrade Package Basic from V8.x/V9.x to V9.3 For configurations based on SIMATIC PDM Basic, Service, S7, PCS 7 (with/without SIMATIC PDM HART Server) 6 languages (English, German, French, Italian, Spanish, Chinese), software class A, runs with Windows 10 Enterprise 2019/2021 LTSB 64-bit or Windows Server 2019/2022 Standard Edition 64-bit, floating license for 1 user Without SIMATIC PCS 7 Software Media Package	
• Goods delivery - License key USB flash drive	6ES7651-5EX88-0YE5

© Siemens AG 2024

Selection and ordering data (continued)

SIMATIC PDM Upgrade Package Basic from V8.x/V9.0 to V9.1 For configurations based on SIMATIC PDM Basic, Service, S7, PCS 7 (with/without SIMATIC PDM HART Server) 6 languages (English, German, French, Italian, Spanish, Chinese), software class A, runs with Windows 7 Ultimate 64-bit, Windows 10 Enterprise 2015 LTSB 64-bit, Windows Server 2008 R2 Standard 64-bit or Windows Server 2012 R2 Standard 64-bit (see SIMATIC PDM V9.1 Readme for latest information), floating license for 1 user Without SIMATIC PCS 7 Software Media Package	
• Goods delivery License key on USB flash drive and Certificate of License, bundled with 1 × SIMATIC PDM Software Media Package per order item	6ES7651-5EX68-0YE5
• Online delivery License key download and online Certificate of License combined with SIMATIC PDM Software Media Package (SIMATIC PDM and device library software download) : Email address required!	6ES7651-5EX68-0YK5
SIMATIC PDM Upgrade Package Complete from V8.x/V9.x to V9.2 For configurations based on SIMATIC PDM PCS 7 Server, PCS 7-FF 6 languages (English, German, French, Italian, Spanish, Chinese), software class A, runs with Windows 10 Enterprise 2019 LTSB 64-bit or Windows Server 2019 Standard Edition 64-bit (see SIMATIC PDM V9.1 Readme for the latest information), single license for 1 installation Without SIMATIC PCS 7 Software Media Package	
• Goods delivery License key on USB flash drive and Certificate of License, bundled with 1 × SIMATIC PDM Software Media Package per order item	6ES7651-5FX78-0YE5
SIMATIC PDM Upgrade Package Complete from V8.x/V9.x to V9.3 For configurations based on SIMATIC PDM PCS 7 Server, PCS 7-FF 6 languages (English, German, French, Italian, Spanish, Chinese), software class A, runs with Windows 10 Enterprise 2019/2021 LTSB 64-bit or Windows Server 2019/2022 Standard Edition 64-bit, single license for 1 installation Without SIMATIC PCS 7 Software Media Package	
• Goods delivery - License key USB flash drive	6ES7651-5FX88-0YE5

Selection and ordering data (continued)

SIMATIC PDM Upgrade Package Complete from V8.x/V9.0 to V9.1 For configurations based on SIMATIC PDM PCS 7 Server, PCS 7-FF 6 languages (English, German, French, Italian, Spanish, Chinese), software class A, runs with Windows 7 Ultimate 64-bit, Windows 10 Enterprise 2015 LTSB 64-bit, Windows Server 2008 R2 Standard 64-bit or Windows Server 2012 R2 Standard 64-bit (see SIMATIC PDM V9.1 Readme for latest information), single license for 1 installation Without SIMATIC PCS 7 Software Media Package	
• Goods delivery License key on USB flash drive and Certificate of License, bundled with 1 × SIMATIC PDM Software Media Package per order item	6ES7651-5FX68-0YE5
• Online delivery License key download and online Certificate of License combined with SIMATIC PDM Software Media Package (SIMATIC PDM and device library software download) : Email address required!	6ES7651-5FX68-0YK5
SIMATIC PDM Upgrade from V7.0 to V8.0 For product configurations based on SIMATIC PDM PCS 7, SIMATIC PDM PCS 7-FF or SIMATIC PDM S7 6 languages (English, German, French, Italian, Spanish, Chinese), software class A, runs with Windows 7 Ultimate 32/64-bit, Windows Server 2003 R2 Standard 32-bit or Windows Server 2008 R2 Standard 64-bit, floating license for 1 user Without SIMATIC PCS 7 Software Media Package	
• Goods delivery SIMATIC PDM V8.0 software and device library on DVD, license key on USB flash drive, Certificate of License	6ES7651-5DX08-0YE5
• Online delivery Software image download (SIMATIC PDM and device library), license key download, online Certificate of License : Email address required!	6ES7651-5DX08-0YK5

© Siemens AG 2024

Overview

SIMATIC S7 F Systems and SIMATIC S7 Safety Matrix software products can be optionally integrated in the process control system for the implementation and operation of safety applications.

The version cycle of these software components is not synchronous with that of SIMATIC PCS 7, however.

SIMATIC PCS 7 version	Compatible versions SIMATIC S7 F Systems	SIMATIC S7 Safety Matrix Tool, SIMATIC Safety Matrix Viewer
V8.1, V8.2, V9.0	V6.1 SP2 or higher V6.2 V6.3	V6.2 SP2 or higher

Compatibility tool

With the compatibility tool on the Internet you can determine which SIMATIC S7 F Systems and SIMATIC S7 Safety Matrix versions are currently suitable for the various SIMATIC PCS 7 versions:

https://support.industry.siemens.com/cs/de/en/view/64847781

© Siemens AG 2024

Selection and ordering data

SIMATIC S7 F Systems	
SIMATIC S7 F Systems V6.3 Upgrade Package For SIMATIC S7 F Systems upgrade from V6.2 to V6.3 2 languages (English, German), software class A, runs on the following operating systems: MS Windows 10 Enterprise 2015 LTSB 64-bit, MS Windows 10 Enterprise 2019 LTSC 64-bit, MS Windows Server 2012 R2 Update Standard Edition 64-bit, MS Windows Server 2016 Standard Edition 64-bit, MS Windows Server 2016 Datacenter Edition 64-bit, Floating License for 1 user Without SIMATIC PCS 7 Software Media Package	
• Goods delivery License key on USB flash drive and Certificate of License, bundled with 1 × SIMATIC S7 F Systems Software Media Package per order item	6ES7833-1CC36-0YE5
• Online delivery License key download and online Certificate of License combined with SIMATIC S7 F Systems Software Media Package (software download and online Certificate of License) : Email address required!	6ES7833-1CC36-0YK5
SIMATIC S7 F Systems V6.2 Upgrade Package For SIMATIC S7 F Systems upgrade from V6.0/V6.1 to V6.2 2 languages (English, German), software class A, runs on the engineering station under Windows 7 SP1 64-bit (Professional, Enterprise, Ultimate) or Windows Server 2008 R2 SP1 Standard 64-bit; on the operator station additionally under Windows 7 SP1 32-bit (Enterprise, Ultimate), Windows 10 Enterprise 2015 LTSB 64-bit or Windows Server 2012 R2 Standard 64-bit (see SIMATIC S7 F Systems V6.2 Readme for latest information), Floating License for 1 user Without SIMATIC PCS 7 Software Media Package	
• Goods delivery License key on USB flash drive and Certificate of License, bundled with 1 × SIMATIC S7 F Systems Software Media Package per order item	6ES7833-1CC26-0YE5
• Online delivery License key download and online Certificate of License combined with SIMATIC S7 F Systems Software Media Package (software download and online Certificate of License) : Email address required!	6ES7833-1CC26-0YK5

Selection and ordering data (continued)

SIMATIC S7 Safety Matrix Tool	
SIMATIC S7 Safety Matrix Tool V6.3 Upgrade Package V6.x -> V6.3 2 languages (English, German), software class A, runs on Windows 7 SP1 (Enterprise/Ultimate), Windows 10 Enterprise LTSB 2015, Windows Server 2008 R2 SP1, Windows Server 2012 R2, Windows Server 2016 Floating License for 1 user Without SIMATIC PCS 7 Software Media Package	
• Goods delivery License key on USB flash drive and Certificate of License, bundled with 1 × SIMATIC S7 Safety Matrix Software Media Package per order item	6ES7833-1SM03-0YE5
• Online delivery License key download and online Certificate of License, combined with SIMATIC S7 Safety Matrix Software Media Package (software download and online Certificate of License) : Email address required!	6ES7833-1SM03-0YK5
SIMATIC S7 Safety Matrix Viewer	
SIMATIC S7 Safety Matrix Viewer V6.3 **Upgrade Package V6.x -> V6.3** 2 languages (English, German), software class A, Runs on Windows 7 SP1 (Enterprise/Ultimate), Windows 10 Enterprise LTSB 2015, Windows Server 2008 R2 SP1, Windows Server 2012 R2, Windows Server 2016 Floating License for 1 user Without SIMATIC PCS 7 Software Media Package	
• Goods delivery License key on USB flash drive and Certificate of License, bundled with 1 × SIMATIC S7 Safety Matrix Software Media Package per order item	6ES7833-1SM63-0YE5
• Online delivery License key download and online Certificate of License, combined with SIMATIC S7 Safety Matrix Software Media Package (software download and online Certificate of License) : Email address required!	6ES7833-1SM63-0YK5

© Siemens AG 2024

Overview

The S7-PLCSIM software used for simulation of SIMATIC PCS 7 automation systems when debugging CFC/SFC user programs can be integrated into the Engineering System, i.e. into the configuration environment of SIMATIC PCS 7. The version cycle of S7-PLCSIM is asynchronous to the version cycle of SIMATIC PCS 7.

S7-PLCSIM as of V5.4 SP8 Upd1 is compatible with SIMATIC PCS 7 V9.1

With the compatibility tool on the Internet you can determine which S7-PLCSIM versions are suitable for the various SIMATIC PCS 7 versions:

https://support.industry.siemens.com/cs/ww/en/view/64847781

Selection and ordering data

S7-PLCSIM Upgrade from V3.x, V4.x, V5.0, V5.2 or V5.3 to V5.4 (incl. SP) 5 languages (English, German, French, Italian, Spanish), software class A, runs with Windows 7 Ultimate 32/64-bit, Windows Server 2003/2003 R2 Standard 32-bit or Windows Server 2008 R2 Standard 64-bit, floating license for 1 user Without SIMATIC PCS 7 Software Media Package Goods delivery License key on USB flash drive, certificate of license, software and electronic documentation on CD	**6ES7841-0CC05-0YE5**

© Siemens AG 2024

Overview

With SIMATIC PCS 7, communications software and licenses of SIMATIC NET are used for the system communication via Industrial Ethernet. Their version cycle is not usually synchronous with that of SIMATIC PCS 7.

The SIMATIC PCS 7 versions correspond to the SIMATIC NET products as follows:

- SIMATIC PCS 7 V9.1 with SIMATIC NET products V16
- SIMATIC PCS 7 V9.0 with SIMATIC NET products V14
- SIMATIC PCS 7 V8.2 with SIMATIC NET products V13

When SIMATIC PCS 7 is upgraded, the BCE and the Hardnet IE bundle licenses with the PCS 7 upgrade packages (for ES and OS) are taken into consideration. REDCONNECT and SOFTNET licenses need to be purchased separately.

Design

SIMATIC NET products are delivered together with the SIMATIC PCS 7 software and are correctly installed automatically.

You may need appropriate licenses for the respective SIMATIC PCS 7 version of the following communications products to activate the software:

Communication products for SIMATIC PCS 7 V10.0	Article No.
SIMATIC NET HARDNET-IE S7 V18, goods/online delivery	6GK1716-1CB18-0AA0/ 6GK1716-1CB18-0AK0
SIMATIC NET HARDNET-IE S7-REDCONNECT V18, goods/online delivery	6GK1716-0HB18-0AA0/ 6GK1716-0HB18-0AK0
SIMATIC NET HARDNET-IE S7-REDCONNECT PowerPack V18, goods/online delivery	6GK1716-0HB18-0AC0/ 6GK1716-0HB18-0AK1
SIMATIC NET SOFTNET-IE RNA V18, goods/online delivery	6GK1711-1EW18-0AA0/ 6GK1711-1EW18-0AK0
Communication products for SIMATIC PCS 7 V9.1	**Article No.**
SIMATIC NET HARDNET-IE S7 V16, goods/online delivery	6GK1716-1CB16-0AA0/ 6GK1716-1CB16-0AK0
SIMATIC NET HARDNET-IE S7-REDCONNECT V16, goods/online delivery	6GK1716-0HB16-0AA0/ 6GK1716-0HB16-0AK0
SIMATIC NET HARDNET-IE S7-REDCONNECT PowerPack V16, goods/online delivery	6GK1716-0HB16-0AC0/ 6GK1716-0HB16-0AK1
SIMATIC NET SOFTNET-IE RNA V16	6GK1711-1EW16-0AA0
Communication products for SIMATIC PCS 7 V9.0	**Article No.**
SIMATIC NET HARDNET-IE S7 V14, goods/online delivery	6GK1716-1CB14-0AA0/ 6GK1716-1CB14-0AK0
SIMATIC NET HARDNET-IE S7-REDCONNECT V14, goods/online delivery	6GK1716-0HB14-0AA0/ 6GK1716-0HB14-0AK0
SIMATIC NET HARDNET-IE S7-REDCONNECT PowerPack V14, goods/online delivery	6GK1716-0HB14-0AC0/ 6GK1716-0HB14-0AK1
SIMATIC NET SOFTNET-IE RNA V14	6GK1711-1EW14-0AA0
Upgrades for communication software	
• SIMATIC NET HARDNET-IE S7 Upgrade Edition 2006 or higher	6GK1716-1CB00-3AE0
• SIMATIC NET HARDNET-IE S7-REDCONNECT upgrade from Edition 2006 (V6.4)	6GK1716-0HB00-3AE0
• SIMATIC NET HARDNET-IE S7-REDCONNECT upgrade for V6.0, V6.1, V6.2 and Edition 2005 (V6.3)	6GK1716-0HB00-3AE1
• SIMATIC NET SOFTNET-IE RNA upgrade	6GK1711-1EW00-3AE0
BCE license	
PCS 7 BCE V9.0, goods/online delivery	6ES7650-1CD58-2YB5/ 6ES7650-1CD58-2YH5
Communication products for SIMATIC PCS 7 V8.2	**Article No.**
SIMATIC NET HARDNET-IE S7 V13, goods/online delivery	6GK1716-1CB13-0AA0/ 6GK1716-1CB13-0AK0
SIMATIC NET HARDNET-IE S7-REDCONNECT V13, goods/online delivery	6GK1716-0HB13-0AA0/ 6GK1716-0HB13-0AK0
SIMATIC NET HARDNET-IE S7-REDCONNECT PowerPack V13, goods/online delivery	6GK1716-0HB13-0AC0/ 6GK1716-0HB13-0AK1
SIMATIC NET SOFTNET-IE RNA V13	6GK1711-1EW13-0AA0
Upgrades for communication software	
• SIMATIC NET HARDNET-IE S7 Upgrade Edition 2006 or higher	6GK1716-1CB00-3AE0
• SIMATIC NET HARDNET-IE S7-REDCONNECT upgrade from Edition 2006 (V6.4)	6GK1716-0HB00-3AE0
• SIMATIC NET HARDNET-IE S7-REDCONNECT upgrade for V6.0, V6.1, V6.2 and Edition 2005 (V6.3)	6GK1716-0HB00-3AE1
• SIMATIC NET SOFTNET-IE RNA upgrade	6GK1711-1EW00-3AE0
BCE license	
PCS 7 BCE V8.2, goods/online delivery	6ES7650-1CD28-2YB5/ 6ES7650-1CD28-2YH5

© Siemens AG 2024

Selection and ordering data

Communication products for SIMATIC PCS 7 V10.0

SIMATIC NET HARDNET-IE S7 V18 Runtime software, 2 languages (German/English), software class A License for up to 4 Industrial Ethernet CPs, floating license for 1 user without SIMATIC PCS 7 Software Media Package	
• Goods delivery Software and electronic manual on DVD, license key USB flash drive	**6GK1716-1CB18-0AA0**
• Online delivery Software, manual and license key download : Email address required!	**6GK1716-1CB18-0AK0**
Activation licenses when using redundant AS	
Alternative license for SIMATIC NET HARDNET-IE S7:	
SIMATIC NET HARDNET-IE S7-REDCONNECT V18 Runtime software, 2 languages (English, German), software class A License for up to 4 Industrial Ethernet CPs, floating license for 1 user without SIMATIC PCS 7 Software Media Package	
• Goods delivery Software and electronic manual on DVD, license key USB flash drive	**6GK1716-0HB18-0AA0**
• Online delivery Software, manual and license key download : Email address required!	**6GK1716-0HB18-0AK0**
Additive license for SIMATIC NET HARDNET-IE S7:	
SIMATIC NET HARDNET-IE S7-REDCONNECT PowerPack V18 Runtime software, 2 languages (English, German), software class A License for up to 4 Industrial Ethernet CPs, floating license for 1 user without SIMATIC PCS 7 Software Media Package	
• Goods delivery License key USB flash drive	**6GK1716-0HB18-0AC0**
• Online delivery License key download : Email address required!	**6GK1716-0HB18-0AK1**
SIMATIC NET SOFTNET-IE RNA V18 Software for connecting SIMATIC PCS 7 stations to PRP-enabled networks with integrated SNMP Runtime software, 2 languages (English, German), software class A, runs with Windows 10 Enterprise 2019 LTSC, Windows Server 2019 Standard Edition Floating license for 1 user, without SIMATIC PCS 7 Software Media Package	
• Goods delivery Software and electronic manual on DVD, license key USB flash drive	**6GK1711-1EW18-0AA0**
• Online delivery Software, manual and license key download : Email address required!	**6GK1711-1EW18-0AK0**

Selection and ordering data (continued)

Communication products for SIMATIC PCS 7 V9.1

SIMATIC NET HARDNET-IE S7 V16 Software for S7, open communication, OPC, PG/OP communication Configuration software, up to 120 connections, floating license Runtime software, software and electronic manual on DVD, license key on USB flash drive, Class A, 2 languages (English, German) for 64-bit: Windows 7 SP1 Professional/Enterprise/Ultimate, Windows 10 Professional/Enterprise Version 1809, 1903 Windows Server 2012 R2 Update (Standard Edition), Windows Server 2016 (Standard Edition, Datacenter), Windows Server 2019 (Standard Edition, Enterprise)	
• Goods delivery Software and electronic manual on CD, license key on USB flash drive	**6GK1716-1CB16-0AA0**
• Online delivery Software and license key download : Email address required!	**6GK1716-1CB16-0AK0**
SIMATIC NET HARDNET-IE S7-REDCONNECT V16 incl. OPC server and HARDNET IE-S7 Software for fail-safe S7 communication, floating license Runtime software, software and electronic manual on DVD, license key on USB flash drive, Class A, 2 languages (English, German) for 64-bit: Windows 7 SP1 Professional/Enterprise/Ultimate, Windows 10 Professional/Enterprise Version 1809, 1903 Windows Server 2012 R2 Update (Standard Edition), Windows Server 2016 (Standard Edition, Datacenter), Windows Server 2019 (Standard Edition, Enterprise)	
• Goods delivery Software and electronic manual on CD, license key on USB flash drive	**6GK1716-0HB16-0AA0**
• Online delivery Software and license key download : Email address required!	**6GK1716-0HB16-0AK0**
SIMATIC NET HARDNET-IE S7-REDCONNECT PowerPack V16 For expansion of HARDNET IE S7 V15 communication software to HARDNET IE S7 REDCONNECT, floating license License key on USB flash drive, Class A, 2 languages (English, German) for 64-bit: Windows 7 SP1 Professional/Enterprise/Ultimate, Windows 10 Professional/Enterprise Version 1809, 1903 Windows Server 2012 R2 Update (Standard Edition), Windows Server 2016 (Standard Edition, Datacenter), Windows Server 2019 (Standard Edition, Enterprise)	
• Goods delivery Software and electronic manual on CD, license key on USB flash drive	**6GK1716-0HB16-0AC0**
• Online delivery Software and license key download : Email address required!	**6GK1716-0HB16-0AK1**

© Siemens AG 2024

Selection and ordering data (continued)

SIMATIC NET SOFTNET-IE RNA V16 Redundant network access, network access software for PRP network structures with integrated SNMP, floating license Runtime software, software and electronic manual on DVD, license key on USB flash drive, Class A, 2 languages (English, German) for 64-bit: Windows 7 SP1 Professional/Enterprise/Ultimate, Windows 10 Professional/Enterprise Version 1809, 1903 Windows Server 2012 R2 Update (Standard Edition), Windows Server 2016 (Standard Edition, Datacenter), Windows Server 2019 (Standard Edition, Enterprise)	6GK1711-1EW16-0AA0

Communication products for SIMATIC PCS 7 V9.0

SIMATIC NET HARDNET-IE S7 V14 Software for S7, open communication, OPC, PG/OP communication Configuration software; up to 120 connections; floating license Runtime software, software and electronic manual on DVD; license key, 2 languages (English, German) for 32/64-bit: Windows 7 SP1 Professional/Ultimate, 64-bit: Windows 8.1 Professional, Windows 10, Server 2008 R2 SP1, Server 2012 R2 For max. 4 CP 1623, CP 1628	
• Goods delivery Software and electronic manual on CD, license key on USB flash drive	6GK1716-1CB14-0AA0
• Online delivery Software and license key download : Email address required!	6GK1716-1CB14-0AK0
SIMATIC NET HARDNET-IE S7-REDCONNECT V14 S7 communication software for fail-safe S7 communication over redundant networks with license for up to 4 Industrial Ethernet CPs Runtime software, 2 languages (English, German); for 32/64-bit: Windows 7 SP1 Professional/Ultimate, 64-bit: Windows 8.1 Professional; Windows 10, Server 2008 R2 SP1, Server 2012 R2 For max. 4 CP 1623, CP 1628	
• Goods delivery Software and electronic manual on CD, license key on USB flash drive	6GK1716-0HB14-0AA0
• Online delivery Software and license key download : Email address required!	6GK1716-0HB14-0AK0

Selection and ordering data (continued)

SIMATIC NET HARDNET-IE S7-REDCONNECT PowerPack V14 For expansion of HARDNET-IE S7 communication software to HARDNET-IE S7-REDCONNECT, with license for up to 4 Industrial Ethernet CPs 2 languages (English, German) for 32/64-bit: Windows 7 SP1 Professional/Ultimate, 64-bit: Windows 8.1 Professional, Windows 10, Server 2008 R2 SP1, Server 2012 R2 For max. 4 CP 1623, CP 1628	
• Goods delivery Software and electronic manual on CD, license key on USB flash drive	6GK1716-0HB14-0AC0
• Online delivery Software and license key download : Email address required!	6GK1716-0HB14-0AK1
SIMATIC NET SOFTNET-IE RNA V14 Software for connecting PCS 7 stations to PRP-enabled networks with integrated SNMP Runtime software, 2 languages (English, German), software class A, for 32/64-bit: Windows 7 SP1 Professional/Ultimate, 64-bit: Windows 8.1 Professional; Windows 10, Server 2008 R2 SP1, Server 2012 R2 Single license for 1 installation Without SIMATIC PCS 7 Software Media Package Goods delivery Software and electronic manual on CD, license key on USB flash drive	6GK1711-1EW14-0AA0
Upgrades for communication software	
SIMATIC NET HARDNET-IE S7 Upgrade Edition 2006 or higher	6GK1716-1CB00-3AE0
SIMATIC NET HARDNET-IE S7-REDCONNECT Upgrade Software upgrade for S7-REDCONNECT Runtime software, 2 languages (English, German), software class A, runs with Windows 7 Ultimate 32/64-bit, Windows Server 2008 R2 Standard 64-bit or Windows Server 2012 R2 Standard 64-bit, single license for 1 installation Goods delivery Software and electronic manual on CD, license key on USB flash drive	
• Edition 2006 (V6.4) or higher	6GK1716-0HB00-3AE0
• For V6.0, V6.1, V6.2, and Edition 2005 (V6.3)	6GK1716-0HB00-3AE1
SIMATIC NET SOFTNET-IE RNA Upgrade Upgrade for SIMATIC NET SOFTNET-IE RNA V8.1 or higher Runtime software, 2 languages (English, German), software class A, runs with Windows 7 Ultimate 32/64-bit, Windows Server 2008 R2 Standard 64-bit or Windows Server 2012 R2 Standard 64-bit, single license for 1 installation Goods delivery Software and electronic manual on CD, license key on USB flash drive	6GK1711-1EW00-3AE0

© Siemens AG 2024

Selection and ordering data (continued)

SIMATIC PCS 7 BCE V9.0 Runtime license for plant bus communication via standard network adapter and Basic Communication Ethernet; already integrated with SIMATIC PCS 7 Industrial Workstations 3 languages (English, German, French), software class A, runs with Windows 7 Ultimate 64-bit, Windows 10 Enterprise 2015 LTSB 64-bit or Windows Server 2012 R2 Standard 64-bit, floating license for 1 user	
• Goods delivery License key on USB flash drive, Certificate of License	**6ES7650-1CD58-2YB5**
• Online delivery License key download, online Certificate of License : Email address required!	**6ES7650-1CD58-2YH5**

Communication products for SIMATIC PCS 7 V8.2

SIMATIC NET HARDNET-IE S7 V13 S7 communication software with license for up to 4 Industrial Ethernet CPs Runtime software, 2 languages (English, German), software class A, runs with Windows 7 Ultimate 32/64-bit, Windows Server 2008 R2 Standard 64-bit, or Windows Server 2012 R2 Standard 64-bit, single license for 1 installation	
• Goods delivery Software and electronic manual on CD, license key on USB flash drive	**6GK1716-1CB13-0AA0**
• Online delivery Software and license key download : Email address required!	**6GK1716-1CB13-0AK0**
SIMATIC NET HARDNET-IE S7-REDCONNECT V13 S7 communication software for fail-safe S7 communication over redundant networks with license for up to 4 Industrial Ethernet CPs Runtime software, 2 languages (English, German), software class A, runs with Windows 7 Ultimate 32/64-bit, Windows Server 2008 R2 Standard 64-bit or Windows Server 2012 R2 Standard 64-bit, single license for 1 installation	
• Goods delivery Software and electronic manual on CD, license key on USB flash drive	**6GK1716-0HB13-0AA0**
• Online delivery Software and license key download : Email address required!	**6GK1716-0HB13-0AK0**

Selection and ordering data (continued)

SIMATIC NET HARDNET-IE S7-REDCONNECT PowerPack V13 For expansion of HARDNET-IE S7 communication software to HARDNET-IE S7-REDCONNECT, with license for up to 4 Industrial Ethernet CPs Runtime software, 2 languages (English, German), software class A, runs with Windows 7 Ultimate 32/64-bit, Windows Server 2008 R2 Standard 64-bit or Windows Server 2012 R2 Standard 64-bit, single license for 1 installation	
• Goods delivery Software and electronic manual on CD, license key on USB flash drive	**6GK1716-0HB13-0AC0**
• Online delivery Software and license key download : Email address required!	**6GK1716-0HB13-0AK1**
SIMATIC NET SOFTNET-IE RNA V13 Software for linking of PCS 7 stations to PRP-enabled networks with integrated SNMP Runtime software, 2 languages (English, German), software class A, runs with Windows 7 Ultimate 32/64-bit, Windows Server 2008 R2 Standard 64-bit or Windows Server 2012 R2 Standard 64-bit, single license for 1 installation Goods delivery Software and electronic manual on CD, license key on USB flash drive	**6GK1711-1EW13-0AA0**
Upgrades for communication software	
SIMATIC NET HARDNET-IE S7 Upgrade Edition 2006 or higher	**6GK1716-1CB00-3AE0**
SIMATIC NET HARDNET-IE S7-REDCONNECT Upgrade Software upgrade for S7-REDCONNECT Runtime software, 2 languages (English, German), software class A, runs with Windows 7 Ultimate 32/64-bit, Windows Server 2008 R2 Standard 64-bit or Windows Server 2012 R2 Standard 64-bit, single license for 1 installation Goods delivery Software and electronic manual on CD, license key on USB flash drive	
• Edition 2006 (V6.4) or higher	**6GK1716-0HB00-3AE0**
• For V6.0, V6.1, V6.2, and Edition 2005 (V6.3)	**6GK1716-0HB00-3AE1**
SIMATIC NET SOFTNET-IE RNA Upgrade Upgrade for SIMATIC NET SOFTNET-IE RNA V8.1 or higher Runtime software, 2 languages (English, German), software class A, runs with Windows 7 Ultimate 32/64-bit, Windows Server 2008 R2 Standard 64-bit or Windows Server 2012 R2 Standard 64-bit, single license for 1 installation Goods delivery Software and electronic manual on CD, license key on USB flash drive	**6GK1711-1EW00-3AE0**

© Siemens AG 2024

Selection and ordering data (continued)

SIMATIC PCS 7 BCE V8.2 Runtime license for plant bus communication via standard network adapter and Basic Communication Ethernet; already integrated with SIMATIC PCS 7 Industrial Workstations 3 languages (English, German, French), software class A, runs with Windows 7 Ultimate 32/64-bit, Windows 10 Enterprise 2015 LTSB 64-bit, Windows Server 2008 R2 Standard 64-bit or Windows Server 2012 R2 Standard 64-bit, floating license for 1 user	
• Goods delivery License key on USB flash drive, Certificate of License	**6ES7650-1CD28-2YB5**
• Online delivery License key download, online Certificate of License : Email address required!	**6ES7650-1CD28-2YH5**

© Siemens AG 2024

Services for SIMATIC PCS 7

17/2	**Lifecycle Services**
17/2	Introduction
17/3	Lifecycle Management Suite
17/4	Managed System Services
17/5	Preventive System Analysis
17/6	Inventory Baseline Services
17/7	SIMATIC System Audit
17/8	Lifecycle Information Services
17/9	Asset Optimization Services
17/10	Legacy System Services
17/11	DCS Application Services
17/13	DCS Modernization Services
17/15	Lifecycle Services Contract
17/16	**Technology services**
17/16	SIMATIC Virtualization as a Service
17/17	SIMATIC DCS / SCADA Infrastructure
17/18	Multi-Vendor Device Integration
17/20	Power Control Integration Services
17/22	SIMATIC Software Platform as a Service
17/23	Industrial Communication Gateway Services

© Siemens AG 2024

Overview

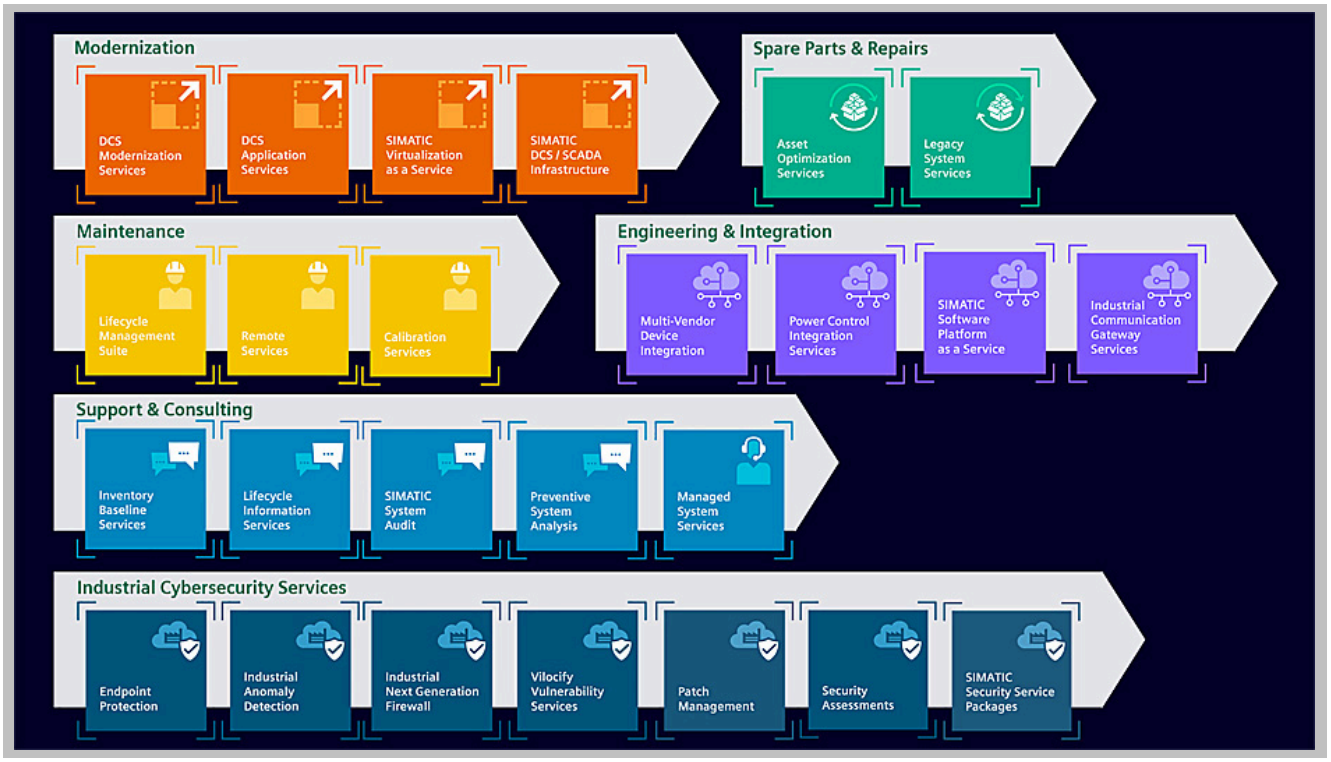

The service capability of your process control system is the key success criterion when it comes to making operating costs predictable and optimizing them continuously, to protect investments and thus ensure plant availability.

Reactive, proactive and preventive lifecycle services therefore ensure the service capability of the process control system in modern plants at optimized costs throughout the entire lifecycle.

The high pressure for innovation, especially through the use of IT systems that are constantly being upgraded, requires regular modernizations - even in automation. Only process control systems that can be updated/upgraded throughout their entire lifecycle can keep pace with the ongoing development of system technology at reasonable costs.

The requirements and specifications for operation of a plant are very specific, especially with a service life of 15 years and more. The service requirements are just as diverse. The SIMATIC PCS 7 Lifecycle Services provide an efficient service program for everything to do with the SIMATIC PCS 7 control system. These services can be easily integrated into individual service contracts that are customized to meet your specific requirements.

The standardized yet still flexible structure of the SIMATIC PCS 7 Lifecycle Services offers a future-proof basis for:

- Protection of your investments
- Securing plant availability
- Ability to calculate long-term maintenance costs
- Cost-optimized modernizations

More information

More information is available on the Internet at:
www.siemens.com/PCS7LCS
www.siemens.com/pils

© Siemens AG 2024

Overview

Lifecycle Management Suite is a COMOS MRO-based Computerized Maintenance Management System (CMMS). The pre-configured cloud-based system provides Standard Operation Procedures (SOP) in the form of checkpoints for lifecycle services assigned to SIMATIC PCS 7 system components and field devices of process instrumentation

Support:

If you have questions about this service, please contact services.automation@siemens.com

Your need:

- Efficient maintenance of the plant and ensuring availability and serviceability of the control technology
- Feedback of service activities and continuous analysis of maintenance histories
- Availability of monitoring information also on mobile devices

Our service offer:

- COMOS MRO-based and pre-configured CMMS system with standard operation procedures
- Comprehensive range of calibration and verification functions for field devices
- Generation of maintenance, obsolescence and IT security reports

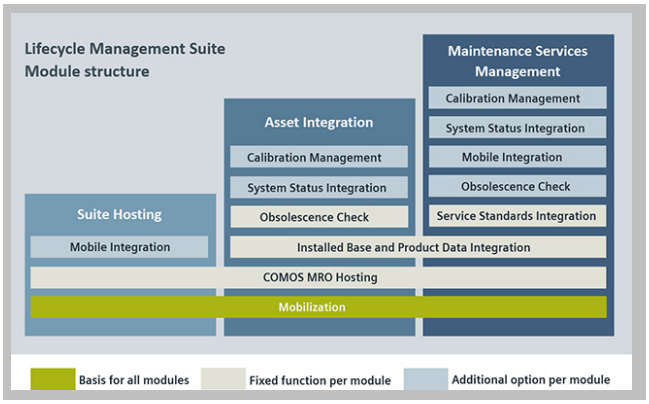

Lifcycle Management Suite

Benefits

- Full transparency thanks to effective import and analysis functions
- Fast system deployment through online setup
- Optimized maintenance and comprehensive asset lifecycle information

Application

SIMATIC PCS 7, PCS neo, Step 7, TIA Portal, field devices of process instrumentation, 6ES7658

Options

LMS Standard*	9LA1110-5CA00-0DA0
LMS Additional plant add on	9LA1110-5CA00-1DB0
LMS Additional concurrent user add on	9LA1110-5CA00-1DC0
LMS Calibration add on	9LA1110-5CA00-1DD0
LMS MobileWorker add on	9LA1110-5CA00-1DE0
LMS Online Monitoring add on**	9LA1110-5CA00-0DF0
LMS Demo***	9LA1110-5CA00-0DA1
LMS Additional Tech Support 10h	9LA1110-5CA00-1CD0

* Use of the LMS software via cloud access for the subscription period 1 year. Administration of customer-specific software instances including software update, including 10 hours of technical support / subscription term (Monday - Friday 8:00 - 17:00 CET). 1x Floating License for one plant and one user simultaneously from a pool of users within "territory".
** Provision of PRTG Network Monitor in the cloud, to monitor up to 500 aspects of your devices in your network, which usually means about 50 devices.
*** Access to a fully functional LMS instance for 3 months. Some restrictions apply (one concurrent user, limited number of plants).

More information

More information is available online at:

siemens.com/lms

© Siemens AG 2024

Overview

One year exclusive and individual technical product support contract for automation, process instrumentation (field devices) and DCS systems to minimize the risk of a production downtime.

Support:

Should you have any question about the ordering process, please contact us at services.automation@siemens.com

Your needs:

- Outsourcing of service activities and concentration on core business
- Competent, high-performance support for engineering tasks and maintenance
- Avoidance of on-site service calls by using future-oriented IT-based services

Our service offer:

This service includes comprehensive system inventory, central coordination of all service activities by an exclusive Siemens support manager and regular status reporting.

Siemens support manager:

- Gets familiar with the plant and maintenance processes to integrate them into the system
- Coordinates and manages all your support requests with the highest priority
- Sends you quarterly status reports – from the initial system acceptance to the final report, over the entire period of the contract.

Benefits

- Exclusive channel for fast callback and central request coordination
- Avoid on-site service
- Exclusive access to the Extranet with contract-relevant contents

Application

SIMATIC PCS 7, PCS neo, Step 7, TIA Portal, field devices of process instrumentation, machine tools, drive systems, 6ES7658, 6DL89, 6ES74, 6ES76

Options

Contents of all MSS options:

- 1 year service contract
- 30 hrs technical support
- Service Manager as central contact person
- Access to further information in SiePortal
- Quarterly reporting on processed service requests

MSS for automation systems	9LA1110-1BA01-0AA0-Z Y01
MSS for process instrumentation (field devices)	9LA1110-1BD01-0AA0-Z Y01
MSS for DCS systems	9LA1110-1BH01-0AA0-Z Y01
MSS Remote Desktop Sharing	9LA1110-1BR01-0AA0-Z Y01
MSS 25 hrs support extension – for DCS systems and/or field devices	9LA1110-1BL00

MSS for PCS neo Premium	9LA1110-1BN01-0AA0-ZY01
MSS for PCS neo – Ready for Virtualization – clarification of a possibility of virtualization	9LA1110-1BN01-0VA0-ZY01
25 hrs support extension for PCS neo	9LA1110-1BL00-0AA0-ZY01

MSS for machine tools systems	
Small Package	9MC1110-0MS00-0AA0
Medium Package	9MC1110-0MS00-0AA1
Large Package	9MC1110-0MS00-0AA2
25 hrs support extension for machine tools systems	9MC1110-0MS00-0AA3

MSS for Drive Systems 30 hrs technical support for one year	9MC3110-0MS00-0AA0
MSS for Drive Systems – 25 hrs support extension	9MC3110-0MS00-0AA1

More information

For any further technical information, please visit the Product Support at https://support.industry.siemens.com/cs/ww/en/view/109806719
Visit our website at siemens.com/mss

© Siemens AG 2024

Overview

Identification of potential risks for SIMATIC PCS 7 systems

Your need:

- Preventive system analysis to minimize risks
- Reduction of maintenace costs
- Avoidance of system downtime

Our service offer:

- Detailed system analyses provided by Siemens experts
- Specific "Tailor-made" measures to increase the maintenance efficiency
- Detailed reports on system condition and recommendation

Benefits

- Fast data acquisition
- Intensive data analysis
- Transparent reporting

Application

SIMATIC PCS 7, Step 7, TIA Portal and WinCC, 6ES7658, 6DL89

Options

Preventive System Analysis one-time	System scope: max. 10 systems* System Status Report generated one time	9LA1110-1CD00
Preventive System Analysis 5	System scope: max. 5 systems	9LA1110-1CA00
Preventive System Analysis 20	System scope: max. 20 systems	9LA1110-1CB00
Preventive System Analysis 50	System scope: max. 50 systems	9LA1110-1CC00
Preventive System Analysis 75	System scope: max. 75 systems	9LA1110-1CE00
Preventive System Analysis 100	System scope: max. 100 systems	9LA1110-1CF00

More information

Further information is available online at:
siemens.com/psa

© Siemens AG 2024

Inventory Baseline Services

Overview

Inventory Baseline Services show which products are used where in the system and represent the lifecycle status of the automation system. The system information is comprehensively recorded and the plant situation is transparently displayed.

Support:

If you have questions about this service, please contact us:
services.automation@siemens.com

Your need:

- Knowledge of the current inventory for planning and preparation of further service measures
- Standardized and complete recording of all installed automation components
- Simultaneously lowest possible time and cost expenditure

Our service offer:

- Cost-efficient, data-based inventory of the automation system
- Transparent overview of the currently installed system inventory and the spare parts stock
- Supply of the result through standardized reports
- Professional evaluation by Siemens experts

Benefits

- Decision support for planning future maintenance and modernization measures
- Data basis for further lifecycle services, e.g., SIMATIC System Audit, Lifecycle Information Services or Asset Optimization Services
- Preparation for updates or upgrades

Application

SIMATIC PCS 7, SIMATIC PCS neo, Step 7, WinCC, 6ES7658

Options

Automation systems

Complete execution of the data collection of the installed base on site by Siemens and data evaluation (available only for Germany)	9LA1110-8AJ00-1AA0
Evaluation of the installed base, collected with the SAS DC tool (SIMATIC Assessment Suite Data Collector)	9LA1110-8AJ00-2AA0
Extension of the data collection and analysis with additional 20 PCs or VMs	9LA1110-8AJ00-4AA0

Process instrumentation (field devices)

Complete execution of the data collection of the installed base on site by Siemens and analysis of process instruments (available only for Germany)	9LA1110-8AJ00-1AB0
This service can only be ordered upon request, please contact us via e-mail: services.automation@siemens.com	
Evaluation of the installed base, collected with the SAS DC tool (SIMATIC Assessment Suite Data Collector)	9LA1110-8AJ00-2AB0
This service can only be ordered upon request, please contact us via e-mail: services.automation@siemens.com	

More information

More information is available online at:
siemens.com/ibs-sios

© Siemens AG 2024

Overview

Analysis and evaluation of the system status of SIMATIC PCS 7 systems or SIMATIC WinCC-based SCADA systems with subordinate SIMATIC S7 level.

Support:

Should you have any question about the ordering process, please contact us at services.automation@siemens.com

Your need:

- Economic efficiency and productivity of the plant over the entire life cycle
- Availability and serviceability of the SIMATIC automation systems used
- Services tailored to the systems and products
- Preparation of a long-term service contract

Our service offer:

- Analysis and evaluation of service capability, upgrade capability, lifecycle contract compliance or PCS neo readiness.

Benefits

- Comprehensive overview of the condition of your automation system
- Weak point and risk analysis with recommendations
- Reduction of downtimes by ensuring service capability
- Basis for long-term lifecycle service contracts

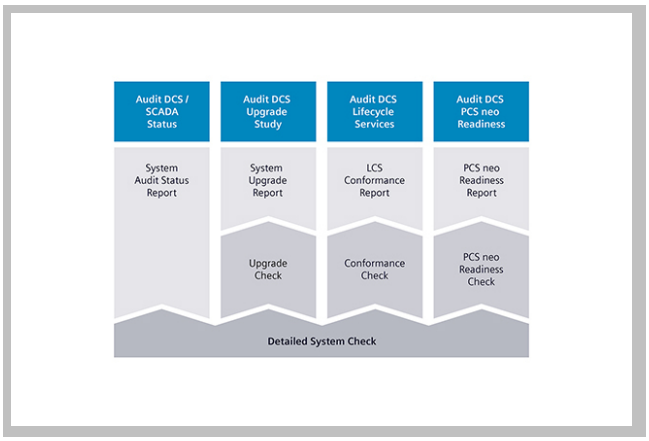

SIMATIC System Audit

Application

SIMATIC PCS 7, SIMATIC PCS neo, Step 7 and WinCC SCADA projects

Options

SIMATIC System Audit is designed in a modular way - you only order the modules you need. Prices on request.

SIMATIC System Audit for SIMATIC PCS 7	
DCS Status	9LA1110–8AC10–4AA1
DCS Upgrade Study	9LA1110–8AC10–4AA2
DCS Lifecycle Services	9LA1110–8AC10–4AA3
DCS PCS neo Readiness	9LA1110–8AC10–4AA4
DCS (Special configuration)	9LA1110–8AC10–3AA1

SIMATIC System Audit for WIN CC/S7	
SCADA Status	9LA1110–8AD10–1AA1

Other	
Travelling expenses and other additional costs	9LA1110-8AC10-8AA1

More information

More information is available online at:
siemens.com/ssa

© Siemens AG 2024

Overview

Continuous supply with information regarding product cycle of deployed automatization components, product-related statistical failure rate as well as plant-specific information about upgrades/updates.

Support:

If you have questions about this service, please contact us:
services.automation@siemens.com

Your need:

- Protection of your plant investment
- Ensuring plant and machine avilability and serviceability
- Prevention of unplanned downtime or cost-intensive supply bottlenecks

Our service offer:

- Basic Information: focal point on functional obsolescence
- Extended Analysis: Analysis from the produced related statistical failure rate (MTBF)
- Comprehensive Operation: addition of plant specific information about upgrades/updates and recommended action

Benefits

- Regular proactive service information for reducing obsolescene risks to a minimum
- Information about new functions in successor products provide pointers regarding optimization potential
- Utilization of new technological functions

Application

SIMATIC PCS 7, PCS neo, Step 7, TIA Portal, field devices of process instrumentation, 6ES7658

Options

The module “Basic One“ provides general product information for product lifetime analysis fully automatically. The key point here is analyzing functional obsolescence.
In the module “Comprehensive One“, a team of experts evaluates the extended product information, expands it with MTBF consideration, plant-specific information on updates and upgrades and provides recommendations for action.
For tech-savvy experts, the API interface provides the most important product information for integration into your own applications.

Basic One	9LA1110-8AG10-1AM0
Comprehensive One	9LA1110-8AG10-3AM0
API Setup	9LA1110-8AG10-0AS0
API	9LA1110-8AG10-0AM0

More information

For more information please visit:
siemens.com/lis

© Siemens AG 2024

Overview

Optimize overall spare parts supply for your maintenance activities with a systematic four phases approach to reach high plant availability.

Support:

Should you have any question about the ordering process, please contact us at services.automation@siemens.com

Your need:

- Secure reliable supply of spare parts
- Minimize risks related to functional obsolescence
- Reduce maintenance costs by optimizing the stock
- Optimize inventory, technically and economically (reduced capital lockup)
- Maximize transparency in inventory management
- Maintain the balance between a high plant availability and productivity of your installations and a minimal budget dedicated to the stock of spare parts replacement

Our service offer:

- Analysis of the spare parts situation on site: availability, product life cycle, spare parts delivery times.
- Concept: Analysis of actual demand and development of a spare parts concept
- Implementation: Establishment of required storage structures, storage locations and spare parts
- Operation: Continuous spare parts supply, depending on agreed scope cyclical inventory analysis

Benefits

- Avoid the lack of spare parts
- Minimize inventory and the budget allocated to it
- Transparency about actual spare parts requirements
- Ensuring spare parts availability over the entire life cycle, thus providing the basis for improved serviceability
- Technical and economic warehouse optimization (lower capital commitment)

Application

SIMATIC PCS 7, PCS neo, Step 7, TIA Portal, field devices of process instrumentation, 6ES7658, 6ES74, 6ES76

Options

Modules	
Analysis	9LA1110-8AE10-1AA0
Concept	9LA1110-8AE10-2AA0
Implementation	9LA1110-8AE10-3AA0
Operation Spare Parts Supply	9LA1110-8AE10-4AA0
Operation Spare Parts Management	9LA1110-8AE10-4BA0

Options	
Product Extension	9LA1110-8AE10-8AA0
Time Extension	9LA1110-8AE10-8BA0

More information

More information is available online at:
siemens.com/aos

© Siemens AG 2024

Overview

Legacy System Services bridge the time until a planned plant modernization of the SIMATIC PCS 7-based control technology.

Support:

Should you have any question about the ordering process, please contact us at services.automation@siemens.com

Your need:

- Time bridging until a scheduled plant modernization of the SIMATIC PCS 7-based control system
- Contractual assurances of delivery, maintenance, and support

Our service offer:

- secured access to technical support for obsolete components, specialized experts for coordination of all requests
- only available in combination with the System Support module, access to obsolete components of SIMATIC PCS 7 with reference via standard ordering processes and known part numbers

Benefits

- Proactive support: assured plant operation through contractually guaranteed support for obsolete SIMATIC PCS 7 components
- Investment protection: time and financial freedom until a plant modernization is implemented
- Cost transparency: Improving the ability to plan maintenance costs and ensuring the economical operation of the plant

Application

- SIMATIC PCS 7, PCS neo, Step 7, TIA Portal and field devices of process instrumentation
- 6ES7658

Options

1-year Legacy System Services Agreement	
Basic Agreement for SIMATIC PCS 7 **V9.0** Systems	9LA1110-8LA14-1AA0-ZY01
Basic Agreement for SIMATIC PCS 7 **V8.x** Systems	
Basic Agreement for SIMATIC PCS 7 **V7.x** Systems	9LA1110-8LA11-1AA0-ZY01
Basic Agreement for SIMATIC PCS 7 **V6.x** Systems	9LA1110-8LA10-1AA0-ZY01

25-hour extension of technical processing	
For a SIMATIC PCS 7 V9.0 Agreement	9LA1110-8LA14-1AX0-ZY01
For a SIMATIC PCS 7 V8.x Agreement	9LA1110-8LA13-1AX0-ZY01
For a SIMATIC PCS 7 V7.x Agreement	9LA1110-8LA11-1AX0-ZY01

More information

More information is available online at:

- Website siemens.com/lss
- Product Support https://support.industry.siemens.com/cs/ww/en/ps/28706

© Siemens AG 2024

Overview

The comprehensive service package for the modernization of existing DCS software components when using independent DCS Application Services performance modules.

Your need:

- Holistic DCS system modernization
- Modernization and standardization of individual applications
- Maintenance of the plant operation and its serviceability

Our service offer:

- Standardized library exchange at a fixed price and project-specific implementation of AS and OS components
- Ensuring the availability and serviceability of the PCS 7 configuration
- Permanent guarantee of the availability of historical process data
- Structural analysis to create transparency

Benefits

- **Innovation:** Modernization of the system to take advantage of current and future DCS innovations
- **Cost-efficiency:** Reduction of maintenance and care costs as well as avoidance of unplanned service costs
- **Effectiveness:** Efficient solutions for complex tasks thanks to processing with a standardized approach

Application

SIMATIC PCS 7, PCS neo, Step 7, TIA Portal, 6ES7658

Selection and ordering data

Library exchange to APL Basic expenses for a PCS 7 multi-project Note: at least 1 AS required (AS414/416/417/410)	**9LA1110-8DA00-3AA0**
Small library exchange to APL For a small PCS 7 AS (AS414 or up to 200 process objects) Note: only available in combination with 9LA1110-8DA00-3AA0	**9LA1110-8DA00-3AB0**
Medium library exchange to APL ***For a medium PCS 7 AS (AS416 or up to 800 process objects)*** ***Note: only available in combination with 9LA1110-8DA00-3AA0***	**9LA1110-8DA00-3AC0**
Large library exchange to APL ***For a large PCS 7 AS (AS417 or 800 up to 1800 process objects)*** ***Note: only available in combination with 9LA1110-8DA00-3AA0***	**9LA1110-8DA00-3AD0**
DCS Modernization Flexible Use Usage and quantity according to agreement e.g., individual advice or additional project services. • Delivery from Karlsruhe • Delivery from Cologne	**9LA1110-8DA00-0CA0** **9LA1276-8DA00-0CA0**
DCS Modernization travel costs Travel expenses for services onsite (will be charged according to actual expenses) Note: Order only in combination: with 9LA1110-8DA00-0CA0 DCS Modernization Flexible Use. • Delivery from Karlsruhe • Delivery from Cologne	**9LA1110-8DAXX-0CB0** **9LA1276-8DAXX-0CB0**
DCS Modernization Flexible Use small (S) ***Usage and quantity as agreed e.g., individual consultation or additional project services.*** • Delivery from Karlsruhe • Delivery from Cologne	**9LA1110-8DA00-0CC0** **9LA1276-8DA00-0CC0**
AS Option - Reposition CFC Blocks ***Repositioning of CFC blocks for a PCS 7 AS*** ***Note: only available in combination with Block Exchange per AS Description of service.*** • Delivery from Karlsruhe • Delivery from Cologne	**9LA1110-8DA00-8AA0** **9LA1276-8DA00-8AA0**
AS Option - SFC Parameter Exchange ***Exchange of parameters in steps, and transitions for a PCS 7 AS*** ***Note: only available in combination with Block Exchange per AS Description of service.*** • Delivery from Karlsruhe • Delivery from Cologne	**9LA1110-8DA00-8AB0** **9LA1276-8DA00-8AB0**
AS Option – Dissolve chart-in-chart ***Ungrouping of chart-in-chart elements for a PCS 7 AS*** ***Note: only available in combination with Block Exchange per AS Description of service.*** • Delivery from Karlsruhe • Delivery from Cologne	**9LA1110-8DA00-8AC0** **9LA1276-8DA00-8AC0**
Block Exchange AS Analysis 5AS ***AS analysis for max. 5 AS per multi-project as basis for the technical clarification of the library exchange.*** ***Note: the AS analysis is a prerequisite for a customer-specific offer.*** • Delivery from Karlsruhe • Delivery from Cologne	**9LA1110-8DA00-1AA0** **9LA1276-8DA00-1AA0**

© Siemens AG 2024

Selection and ordering data (continued)

Block Exchange AS Analysis 10AS ***AS analysis for max. 10 AS per multi-project as basis for the technical clarification of the library exchange.*** ***Note: the AS analysis is a prerequisite for a customer-specific offer.*** • Delivery from Karlsruhe • Delivery from Cologne	**9LA1110-8DA00-1AB0** **9LA1276-8DA00-1AB0**
Block Exchange AS Analysis 20AS ***AS analysis for max. 20 AS per multi-project as basis for the technical clarification of the library exchange.*** ***Note: the AS analysis is a prerequisite for a customer-specific offer.*** • Delivery from Karlsruhe • Delivery from Cologne	**9LA1110-8DA00-1AC0** **9LA1276-8DA00-1AC0**
Block Exchange AS Analysis 30AS ***AS analysis for max. 30 AS per multi-project as basis for the technical clarification of the library exchange.*** ***Note: the AS analysis is a prerequisite for a customized offer.*** • Delivery from Karlsruhe • Delivery from Cologne	**9LA1110-8DA00-1AD0** **9LA1276-8DA00-1AD0**
Block Exchange AS Analysis 50AS ***AS analysis for max. 50 AS per multi-project as basis for the technical clarification of the library exchange.*** ***Note: the AS analysis is a prerequisite for a customer-specific offer.*** • Delivery from Karlsruhe • Delivery from Cologne	**9LA1110-8DA00-1AE0** **9LA1276-8DA00-1AE0**
Block Exchange OS Analysis ***Required for each PCS 7 server (OS image analysis for identification of OS activities). Analysis data are transferred in Excel file.***	**9LA1110-8DA00-1BA0**
OS Option Analysis Detail ***Required for each PCS 7 server (additional comprehensive detailed analysis data as MS Access database for internal evaluations).*** ***Note: only available in combination with 9LA1...-8DA00-1BA0 Block Exchange OS Analysis.***	**9LA1110-8DA00-6BA0**
Block Exchange OS Standard Basis 80 ***Library exchange to APL*** ***Basic effort required for up to 80 images per PCS 7 OS server.***	**9LA1110-8DA00-3BA0**
Extension OS Standard 10 pictures ***Additional processing of 10 process pictures***	**9LA1110-8DA00-3BB0**
Conversion to System Archives Basis 400 ***Basic effort for setting the archiving at the block connection in the CFC, based on available process value archives, and conversion to system archives for up to 400 archive variables.*** ***Connection of the OnlineTrendControls to the new variables of the system archives.*** ***Note: only available in combination with Block Exchange AS/OS.***	**9LA1110-8DA00-8BA0**
Extension System Archives 100 ***Setting the archiving at the block connection in the CFC, based on available process value archives, and conversion to system archives for additional 100 archive tags.*** ***Note: only available in combination with 9LA1110-8DA00-8BA0 (Conversion to System Archives Basis 400)***	**9LA1110-8DA00-8BB0**
OS Replacement OnlineTrendControl Basis 50 ***Basic effort required per PCS 7 OS server for the replacement of up to 50 classic OnlineTrendControls with current OnlineTrendControls.***	**9LA1110-8DA00-5BA0**

Selection and ordering data (continued)

Expansion of the Replacement OnlineTrendControl 10 ***Replacement of 10 additional classic OnlineTrendControls in the process pictures with current OnlineTrendControls.*** ***Note: only available in combination with 9LA1110-8DA00-5BA0 (OS Replacement Online TrendControls Basis 50)***	**9LA1110-8DA00-5BB0**
AS Option Structural Analysis ***Detection of recurring structures in CFCs for standardization and preparation for a CM/CMT conversion, for up to 10 search structures with up to 3 options in maximum 10 AS.*** • Delivery from Karlsruhe • Delivery from Cologne	**9LA1110-8DA00-6AA0** **9LA1276-8DA00-6AA0**
Conversion OS Image Resolution Basic 80 ***Basic effort for adaption of image resolutions for up to 80 images including manual post-editing.*** • Delivery from Karlsruhe • Delivery from Cologne	**9LA1110-8DA00-5BC0** **9LA1276-8DA00-5BC0**
Extension OS Image Resolution 20 ***Basic effort for adaption of 20 additional images, including manual post-editing.*** • Delivery from Karlsruhe • Delivery from Cologne	**9LA1110-8DA00-5BD0** **9LA1276-8DA00-5BD0**
Conversion OS Image Resolution Basic 20 ***Basic effort for adaptation of image resolutions for up to 20 images, including manual post-editing.*** • Delivery from Karlsruhe • Delivery from Cologne	**9LA1110-8DA00-5BE0** **9LA1276-8DA00-5BE0**
Control Module (CM) Conversion per AS ***Conversion of defined block-structures to Control Modules for one AS.*** ***Note: Only available in combination with AS option structural analysis (9LA1110-8DA00-6AA0) and Control Module conversion per AS (9LA1110-8DA00-4AB0).*** • Delivery from Karlsruhe • Delivery from Cologne	**9LA1110-8DA00-4AA0** **9LA1276-8DA00-4AA0**
Control Module Conversion per CMT ***Conversion of recurring structures in Control Module, per CM type.*** ***Note: only available in combination with AS option structural analysis (9LA1110-8DA00-6AA0) and Control Module Conversion per AS (9LA1110-8DA00-4AA0).*** • Delivery from Karlsruhe • Delivery from Cologne	**9LA1110-8DA00-4AB0** **9LA1276-8DA00-4AB0**
SFC documentation per chain ***Graphical representation of an SFC chain in an Excel file (per single SFC chain).*** • Delivery from Karlsruhe • Delivery from Cologne	**9LA1110-8DA00-4GA0** **9LA1276-8DA00-4GA0**

© Siemens AG 2024

Overview

Holistic and individual support for the modernization of existing DCS systems.

Your need:

- Long-term investment protection
- Reduced time and costs for system operation
- Compliance with current IT security standards

Our service offer:

- Upgrades to current PCS 7 versions
- Preparation for changeover to SIMATIC PCS neo
- Preparation for lifecycle service contract
- Support for modernization of TELEPERM M systems

Benefits

- High quality of the upgrade reducing downtimes
- All SIMATIC PCS 7 services from a single source with clear responsibilities and many years of modernization know-how
- Innovative through the use of current and future DCS technologies with simultaneous reduction of maintenance costs

Application

SIMATIC PCS 7, PCS neo, Step 7, TIA Portal, field devices of process instrumentation, 6ES7658, 6DL89

Options

OS Image Resolution Adjustment	
Conversion OS Image Resolution Basic 80 Basic cost for changing image resolutions for up to 80 images, including manual follow-up work.	9LA1110-8DA00-5BC0
Conversion OS Image Resolution Basic 20 Basic cost for changing image resolutions for up to 20 images, including manual follow-up work.	9LA1110-8DA00-5BE0
Extended OS Image Resolution 20 Change of image resolution for 20 additional images, including manual follow-up work Note: Can only be ordered in combination with Conversion OS Image Resolution Basic 80lbar	9LA1110-8DA00-5BD0

OS OnlineTrendControl Replacement	
OS Replacement OnlineTrendControl Basic 50	9LA1110-8DA00-5BA0
Expansion Replacement OnlineTrendControl 10 Note: Can only be ordered in combination with OS Replacement OnlineTrendControl Basic 50	9LA1110-8DA00-5BB0

Modernization Consulting & Support	
Service Agreement TELEPERM M Basic Entitles the customer to order still available TELEPERM M software components, including technical support Term: 1 year	9LA1110-8DA00-0FA0

PCS 7/ TM-OS Coupling Package Upgrade V5.2 for PCS 7 V8.2 SP2, V9.0 SP1, SP2, SP3 Possible for Win Server 2016	
Full version PCS 7/TM-OS V5.2	6DS5128-1XX40-3XX3
Upgrade to PCS 7/TM-OS V5.2	6DS5128-1XX40-2XX3
Upgrade to PCS 7/TM-OS V5.2 + Upgrade to PCS 7/TM-OCX V5.2	6DS5128-1XX42-2XX3

PROGRAF AS for Windows 10 Enterprise 2015	
PROGRAF AS+/Win10 Upgrade with new USB-Dongle	Customer specific solution

Modernization Consulting & Support	
DCS Modernization Flexible Use Use and quantity by agreement e.g., individual advice or additional project services	9LA1110-8DA00-0CA0
DCS Modernization Flexible Use S Small (S) Use and quantity by agreement e.g., individual advice or additional project services	9LA1110-8DA00-0CC0
DCS Modernization travel costs Travel costs for on-site services Note: Can only be ordered in combination with 9LA1110-8DA00-0CA0 DCS Modernization Flexible Use	9LA1110-8DA00-0CB0

© Siemens AG 2024

More information

More information is available online at:
siemens.com/das

© Siemens AG 2024

Overview

Modular service program for a lifecycle service contract ensuring sustainable serviceability and increasing plant availability.

Support:

If you have questions about this service offering, please contact us at
services.automation@siemens.com

Your need:

- Long-term assurance of investment protection
- Consistent functionality on renewed and maintained system platform
- Plannability of necessary service measures and costs

Our service offer:

- System modernizations
- On-call service and on-site and remote repairs
- Inspection, maintenance, spare parts & repairs
- Contract management, support and consulting
- Obsolescence management

Benefits

- Transparency of costs for services and modernization
- Increased system availability due to assured start-up times for service, spare parts supply and preventive maintenance measures
- Preservation of the serviceability of the system

Application

SIMATIC PCS 7, PCS neo and WinCC SCADA systems

More information

More information is available online at:
siemens.com/pcs7lcs

© Siemens AG 2024

SIMATIC Virtualization as a Service

Overview

Virtualization solution for SIMATIC systems - with efficient maintenance, modernization and care of deployed system components for a smooth plant operation.

Support:

If you have questions about this service offering, please contact us at services.automation@siemens.com

Your need:

- Maintenance and care of installed software components
- Reduce lifecycle costs
- Fast, reliable service and support

Our service offer:

Everything from a single source - virtualization solution, including the suitable software and hardware components as well as services throughout the entire lifecycle

- Setup of complete visualization hosts and configuration of virtual machines
- Installation of SIMATIC software ready-to-use and additional configuration of operating systems
- Comprehensive service package: From installation and configuration to a 3/5-year service contract and additional options such as Managed System Services, Remote Services or Industrial Security Services

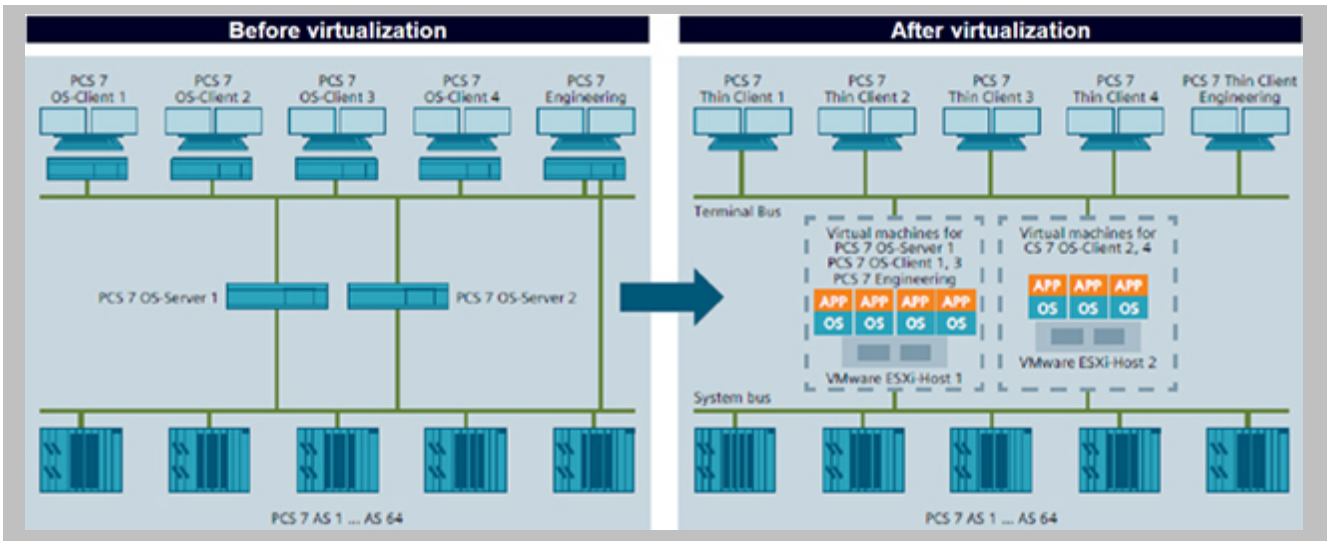

SIMATIC Virtualization as a Service

Benefits

- From a single source lifecycle services for SIMATIC products, VMware, hardware and software
- Simple implementation of a virtualization solution, with prefabricated, configured, ready-to-use, tested systems for DCS systems - easy connection to MES systems possible
- Cost reduction through energy/space savings and optimized maintenance/servicing

Application

SIMATIC PCS 7, PCS neo, Step 7, TIA Portal, 6ES7658, 6DL89

More information

More information is available online at:
www.siemens.com/sivaas

© Siemens AG 2024

Overview

Deployment of powerful and preconfigured IT infrastructure with preinstalled software for data backup, data archiving and visualization.

Support:

If you have questions about this service offering, please contact us at services.automation@siemens.com

Your need:

- Increased availability of your automation systems
- Productivity boost through historical data from operations

Our service offer:

- Transparent reporting, archiving and backup system
- Comprehensive IT solution comprising server hardware and software
- Customized services from a single source

Benefits

- Providing services during the entire life cycle
- Coverage of all installed components and the complete system
- All-round support for all hardware and software components included

Application

SIMATIC PCS 7, PCS neo, Step 7, TIA Portal and field devices of process instrumentation, 6ES7658, 6DL89

Options

- Different architectures available - contact our consulting

More information

More information is available online at:
www.siemens.com/sidsi

© Siemens AG 2024

Multi-Vendor Device Integration

Overview

Integration of field devices that are not supported by the SIMATIC (PCS 7/ neo) standard system

Support:

If you have questions about this service, please contact us at services.automation@siemens.com

Your need:

- Seamless and system compliant integration of 3rd party devices in SIMATIC PCS 7 and PCS neo AS/OS

Our service offer:

- The first step is to provide advice and clarify customer requirements in an evaluation process
- Once the evaluation has been completed, the desired library can be ordered
- Depending on the requirements delivery of library with:
- APL-compliant AS / OS driver library, if necessary with Maintenance Station
- Driver generator (generate assembly driver)
- Manual and online help
- 5-year service agreement for updates and support included

Benefits

- Cost savings during commissioning because of proven MVDI libraries (20 years of experience)
- As part of the service contract, no update costs for upgrades
- All-round carefree system & support package from a single source and directly from the manufacturer
- Risk minimization through testing possibilities with SIMIT
- Siemens libraries can be combined with a 5 year Lifecycle Services Contract

© Siemens AG 2024

Application

S7 400, S7-410, PCS 7 ES
6ES741, 6ES76546, 6ES7656, 6ES765

Example: Connection of 3rd Party devices in SIMATIC PCS 7 and PCS neo AS/OS

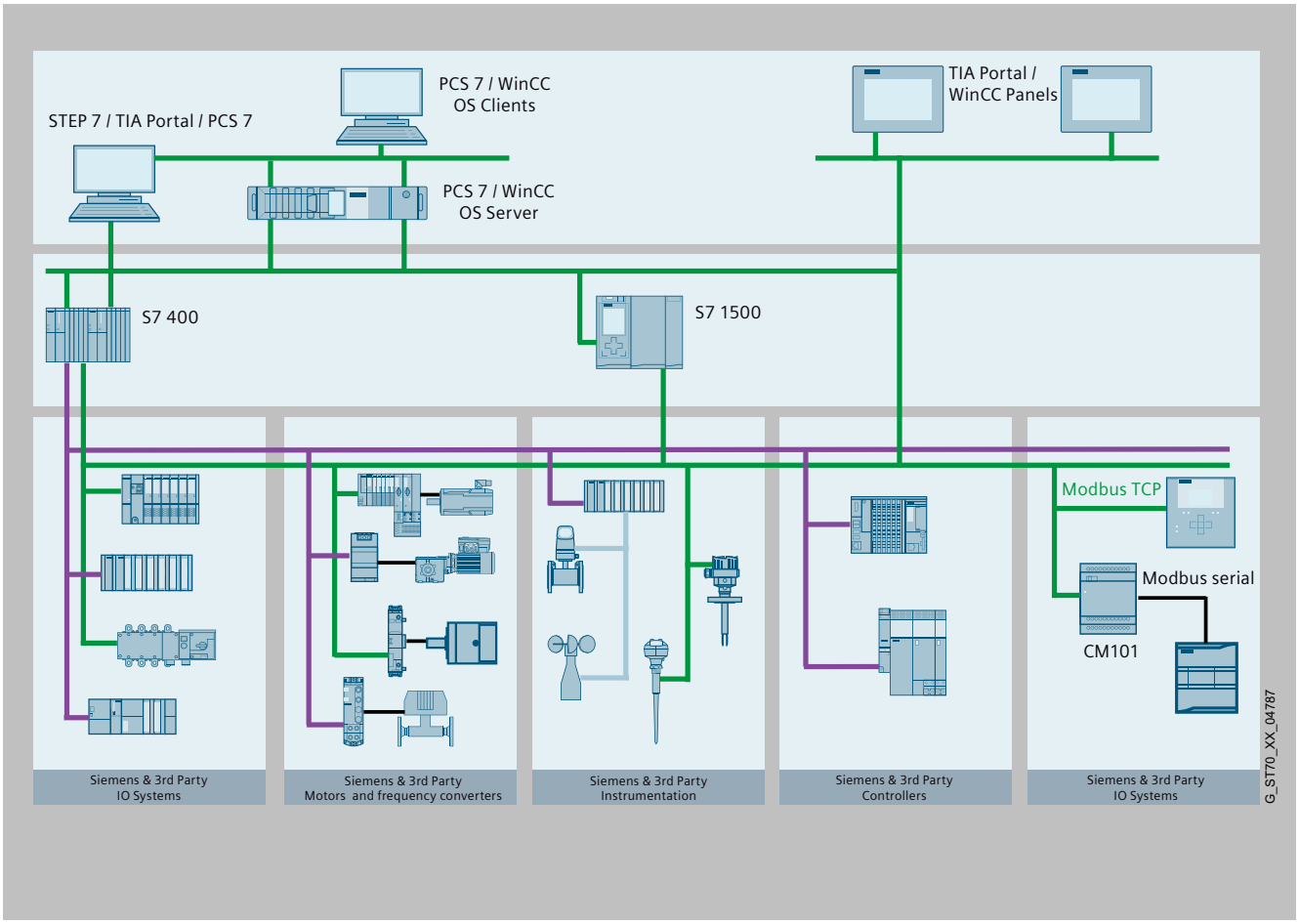

MVDI (Multi-Vendor Device Integration)

Options

Licence for AS Driver Library + 5 year Service Agreement	
Evaluation AS Driver Library AS Building Block Driver Feasibility Study and Functional Testing of Project-Specific Requirements	9LA1110-6MV00-0AA0
AS Driver Library incl. Service Agreement (valid for one plant)	9LA1110-6MV00-0AB0

Licence for + 5 year Service Agreement	
Evaluation OS Driver Library	9LA1110-6MV00-0BA0
OS Driver Library incl. Service Agreement (valid for one plant)	9LA1110-6MV00-0BB0

© Siemens AG 2024

Overview

Integration of switchgear (protection devices) per IEC 61850 into process automation systems

Support:

If you have questions about this service, please contact us via e-mail at function.blocks.industry@siemens.com

Your need:

- Integration of medium-voltage devices into SIMATIC process automation systems
- Project consulting and feasibility studies
- Customized services and products, to meet project requirements

Our service offer:

- Software and hardware in combination with a 5-year service agreement
- Clarification of general technical questions and concerns about system operation
- Support in search, analysis, and elimination of errors
- Support in the selection and implementation of software updates for new
  PCS 7, WinCC, TIA or PCS neo versions
- Upgrades for functional enhancements
- Spare parts for Station Gateway
- Further project-specific functional extensions and feasibility studies on request

Watch how to integrate your medium-voltage switchgear according to IEC 61850 into SIMATIC PCS 7.

Benefits

- Carefree system and support package from a single source and directly from the manufacturer
- One point of contact for support on all PCS 7 or STEP 7 devices with no limit on requests
- Wide range of connection options for IEC 61850 devices in SIMATIC systems - customizable and expandable on request
- One automation system for processes and energy

Application

- S7 400, PCS 7 ES, STEP 7, S7 1500, PCL, TIA, WinCC, SIPROTEC 5
- 6ES74, 6ES7651-5AA68, 6ES78, 6ES751, 6ES765, 6ES7822-0A, 6AV6271, 7SJ8, 7SJ6, 7SA8,7SA5, 7SA6, 7SD8, 7SD5, 7SD6, 7SL8, 7UT8, 7UT6, 7SK8, 7UM8, 7UM62, 7VE85, 7VA6, 7VK87, 7VK61, 7SS85, 7SS52, 7MD8, 7SC80, 7RW80, 7VU68, 6MD6

© Siemens AG 2024

Options

SIMATIC PCS 7 or STEP 7

Station Gateway for singular / redundant connection of up to 128 IEDs via IEC 61850 in PCS 7			
IPC227E Station Gateway for 64 IEDs	9LA1110-6BC10-0AA0	128 IEDs	9LA1110-6BC10-0AA1
CN 4100 Station Gateway CPU (incl. license for 64 IEDs)	9LA1110-6CN10-0AA0		
CN 4100 Station Gateway Rack	9LA1110-6CN10-0AX0		
CN 4100 Station Gateway Upgrade to 128 IEDs (for one CPU)	9LA1110-6CN10-0AA1		
IPC227E or CN 4100 Station Gateway only in combination with Service Agreement over 5 years	9LA110-6BC10-0AX0		
5-year Service Agreement extension	9LA1110-6BC10-0AX1		
5-year Service Agreement re-activation	9LA1110-6BC10-0AX2		
IPC227E Station Gateway optional license upgrade IEC 61850 for up to 128 IEDs	9LA1110-6BC10-0AU0		
Only in combination with 5-year Service Agreement	9LA1110-6BC10-0AX0		

IEC 61850 MMS Client AS Library - Plant license for integration of up to 8 IED/CPU in PCS 7/STEP 7 Delivery online (OSD – Online Software Delivery)	
Software for PCS 7/STEP7	9LA1110-6PC10-3BB8
Only in combination with 5-year Service Agreement	9LA1110-6PC10-3CA0

WinCC

WinCC IEC 61850 MMS Channel - Pure software solution for the integration of up to 255 IEDs in WinCC					
Software for 20 IEDs	9LA1110-6PC10-1BE3	50 IEDs	9LA1110-6PC10-1BE4	255 IEDs	9LA1110-6PC10-1BE5
Only in combination with 5-year Service Agreement			9LA1110-6PC10-1CA0		

TIA Portal

TIA Station Gateway - for singular connection of up to 20 IEDs via IEC 61850 in TIA Portal	
Hardware and software, including 5-year service Agreement	9LA1110-6BC10-0AB0

IEC 61850 MMS Client AS Library - Plant license for integration of up to 8 IED/CPU in TIA Portal Delivery online (OSD – Online Software Delivery)	
Software for TIA Portal	9LA1110-6PC10-3BC8
Only in combination with 5-year Service Agreement	9LA1110-6PC10-3CA0

More information

- Visit us on web! www.siemens.com/pcis
- Product Support: https://support.industry.siemens.com/cs/ww/en/view/109800036
- Download the brochure here: https://assets.new.siemens.com/content/siemens/assets/ui/en/search.html#/asset/sid:716b102a-c240-4126-a830-a2ae1615dad8

© Siemens AG 2024

SIMATIC Software Platform as a Service

Overview

Cloud-based, ready-to-run IT infrastructure with preinstalled SIMATIC software as an efficient method for providing engineering- and operator training-environments.

Support:

If you have questions about this service offering, please contact us at
services.automation@siemens.com

Your need:

- SIMATIC software for short-term, temporally limited and flexible use
- Flexible / demand-based utilization of additionally required resources
- Provision of necessary resources such as computing power, memory and networks

Our service offer:

- Preinstalled and preconfigured virtual appliance in the cloud accessible through our website
- Adaptability to individual needs during use
- Demand-oriented pricing model to reduce investment costs to actual usage

Benefits

- Reduction of investment costs through transition from CAPEX to OPEX
- Location-independent multi-project and multi-user engineering through flexible use of distributed engineering resources
- Fast availability of different SIMATIC software versions

Application

SIMATIC PCS 7, PCS neo, Step 7, TIA Portal, field devices of process automation, 6ES7658

More information

More information is available online at:
www.siemens.com/sipaas

© Siemens AG 2024

Overview

Modbus/ M-Bus connection of devices or systems to SIMATIC PCS 7, Step 7, PCS neo and TIA Portal via standard gateways software and hardware

Support:

If you have questions about this service offering, please contact us at services.automation@siemens.com

Your need:

- Connection of devices to the SIMATIC S7 via protocols that are not supported by the system standard
- PCS 7 typical engineering

Our service offer:

- Project consulting and support by our service experts are included
- Engineering support and integration of the standard protocols into your systems can be ordered optionally on request
- Our plant licenses allow the multiple usage as often as required within a plant

Example: Connection of serial MODBUS slaves for S7-400

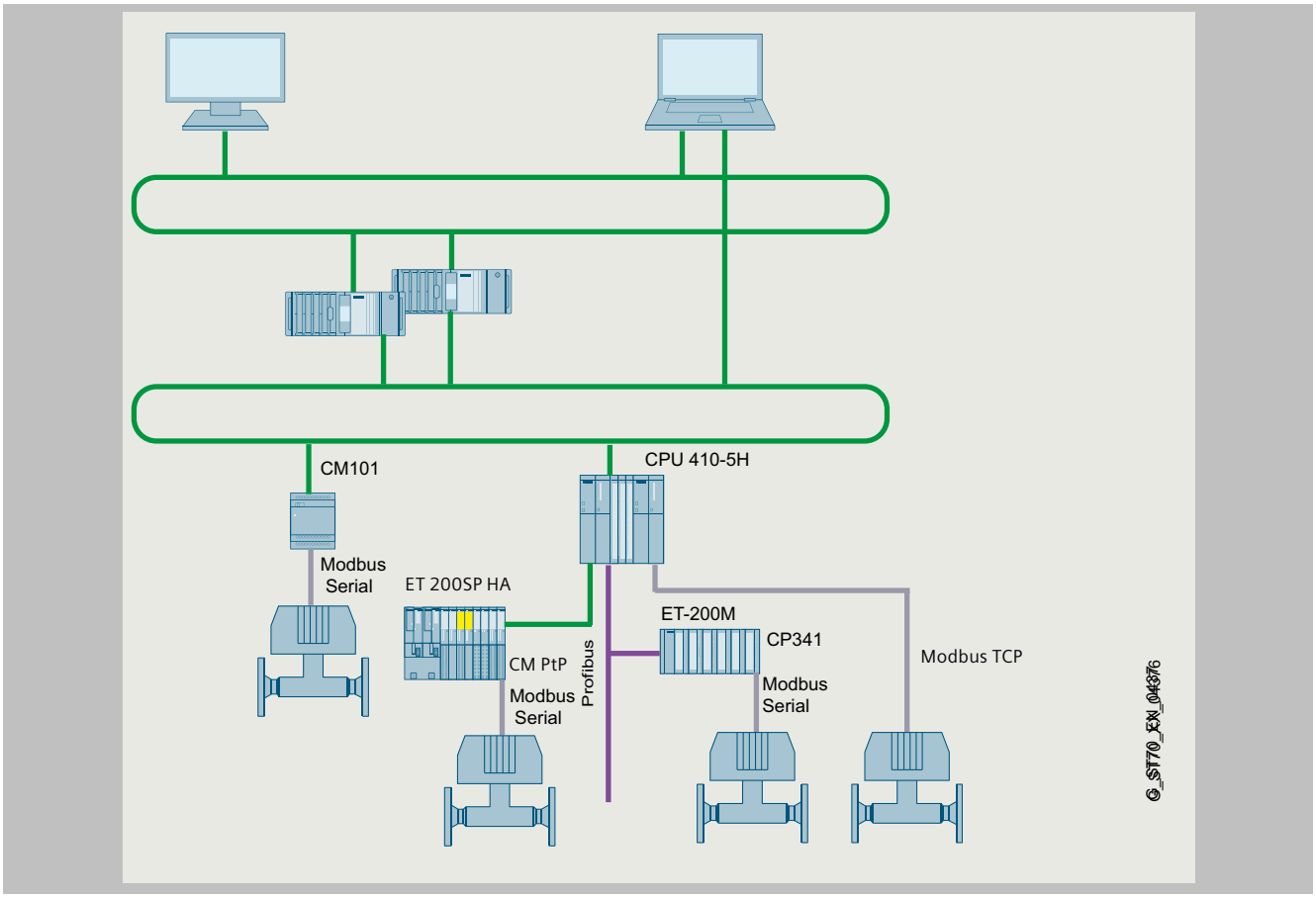

Step 7 / PCS 7 Modbus

© Siemens AG 2024

Overview (continued)

Example: Connection of EtherNet/IP Adapter

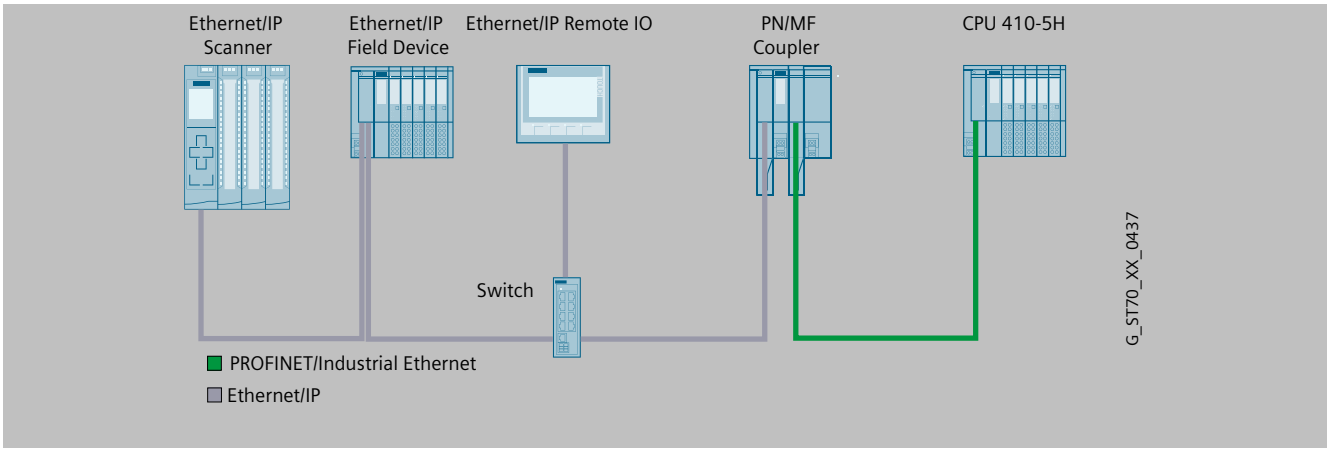

Benefits

- Cost optimization by project or single CPU licenses
- Wide range of connection possibilities for standard protocols into the SIMATIC world
- Siemens as a supplier of hardware and software

Application

SIMATIC PCS 7, Step 7, PCS neo and TIA Portal 6ES7651-5AA68, 6ES7651-5AA68, 6ES78, 6ES74

© Siemens AG 2024

Options

1. Standard Gateways Soft- and Hardware

Library to connect serial Modbus Slaves per ET 200M CP341 or ET 200SP HA CM PtP	
Library to connect serial Modbus Slaves per ET 200M CP341 or ET 200SP HA CM PtP	9LA1110-6CG30-0AA0

Modbus Advanced Library to connect serial Modbus Slaves per ET 200SP HA CM PtP	
Single CPU License	9LA1110-6CG31-0AA0

Library for Connection of MODBUS TCP Slaves for	
Singular S7-400 Systems	9AE4110-1MB10
Singular S7-400 Systems delivery via OSD	9AE4110-1MB11
Redundant S7-400H Systems	9AE4110-1MB20
Redundant S7-400H Systems delivery via OSD	9AE4110-1MB21

Gateway incl. library for connection of Serial MODBUS Slaves for	
Singular S7-400 Systems	9AE4110-2MB10
Redundant S7-400H Systems	9AE4110-2MB20
Spare parts for CM101 communication modul (without license)	9AE4111-1AA00

Library to connect serial Modbus Slaves per ET 200M CP341 or ET 200SP HA CM PtP	
Plant License S7HMODM3 Migration Library (max 20 CPU)	9LA1110-6CG30-0AA0

Modbus Advanced Library to connect serial Modbus Slaves per ET 200SP HA CM PtP	
Single CPU License	9LA1110-6CG31-0AA0

Library for M-BUS for	
PCS 7 CFC Library	9AE4110-6BA00
TIA Portal Library	9AE4110-6BB00

2. Industrial Communication Gateway Services

Library for connecting EtherNet/IP PN/MF Coupler Library or PN/PN Coupler at PCS 7	
Library (Plant license)	9LA1110-6CG20-0AA0

PCS 7 EtherNet/IP Gateway	
PCS 7 EtherNet/IP Gateway Library (Plant License)	9LA1110-6CG10-0AA0
EtherNet/IP Gateway Hardware	9LA1110-6CG11-0AA0

3. ABB MasterBus 300

Gateway for ABB MasterBus 300	
Hardware inclusive Software	9LA1110-6CG40-0AA0

4. Customized Gateways

Further individual connection solutions to special devices, adaptations to Siemens gateways, as well as the development of gateways for new communication protocols can be realized by our service experts on request

© Siemens 2024

18/2 **Training Services**
18/2 SITRAIN

18/4 **Partners**
18/4 Partners at Siemens
18/5 Siemens Partner Program

18/6 **Industry Services**
18/6 Industry Services – Portfolio
18/8 Online Support

18/9 **Software licenses**

18/11 **Conditions of sale and delivery**

© Siemens 2024

Introduction

Learn the way you like it – with SITRAIN

SITRAIN imparts a wide range of technical knowledge for all industries and applications. Our offering is oriented toward the needs of learners and the demands of innovative companies. Get pleasure out of learning - thanks to innovative learning methods, personal support, and knowledge that will help you in your work and further development. For successful, flexible, and continuous learning.

Education and training directly from the manufacturer

SITRAIN provides you with training from the industrial product and solution portfolio from Siemens and benefits from 30 years of expertise in technical training. Take a look at the many options for expanding your knowledge with SITRAIN and find the course that meets your needs! The following training and further education units are available to you for your individual knowledge building:

Industrial Automation Systems SIMATIC

Training available for:
SIMATIC S7-1500. TIA Portal, SIMATIC S7-300/400, SIMATIC S7-1200

Drive Technology

Training available for:
SINAMICS S120 and SINAMICS G120 low-voltage converters, SINAMICS G130 / G150 / G180 / S150

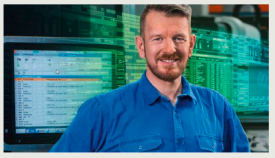

SINUMERIK CNC automation system

Training available for:
SINUMERIK 840D, SINUMERIK 840D sl and SINUMERIK ONE

Process Control Systems

Training available for:
SIMATIC PCS 7, SIMATIC PCS neo

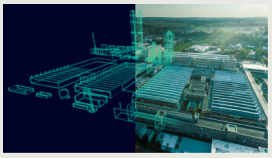

Digital Enterprise

Training available for:
Openness, SIMIT, OPC UA, Industrial Edge, Virtual commissioning

Industrial Communications

Training available for:
PROFINET, SCALANCE, R UGGEDOM, Industrial Ethernet, Fieldbus communication, Industrial Security, Remote communication

Identification and Locating

Training available for:
RFID, RTLS-Systems

Operator Control and Monitoring Systems

Training available for:
SIMATIC WinCC Unified in TIA Portal, SIMATIC WinCC in TIA Portal, SIMATIC WinCC V7x

Motion Control System SIMOTION

Training available for:
SIMOTION (Programming, Commissioning, Diagnostics, Service)

Smart Infrastructure

Training available for:
SIRIUS, SENTRON, SIVACON, ALPHA, SIMOCODE, Circuit breakers

Process Analytics & I nstrumentation

Training is available for process analytics and instrumentation, explosion protection, process gas chromatographs

Additional training offer

SIMOVE with Automated Guided Vehicles (AGV), SIPLUS CMS, Guidelines and standards for control cabinets

© Siemens 2024

Introduction

Different learning formats and methods for maximum learning success

With our SITRAIN training formats, you learn in the way that best suits your preferences and routine. You decide whether you would rather take online training or face-to-face training. It is up to you whether you would like to study on demand or at fixed times.

With a personal learning consultant, in the team, or on your own – you can explore all the possibilities.

Discover our three learning formats:

Learning Event

SITRAIN Learning Events are the perfect choice when you want to achieve a defined learning goal in the shortest possible time. You learn in a protected learning environment outside of the daily work routine under the guidance of a learning consultant - virtually, in the training center, or at your company.

Learning Membership SITRAIN Access

With SITRAIN access, you enter a world of extensive and constantly expanding self-study units on our digital learning platform for industry. With SITRAIN access, you can implement a modern learning culture in your team or company with independent and continuous learning.

Learning Journey

The Learning Journey is the perfect combination of units taken live and self-study units for sustainable learning success. The modular approach enables simple integration into your daily work. This also includes one-year membership for using the SITRAIN access digital learning platform.

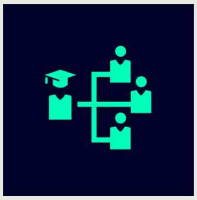

Live

Learn together with others, simultaneously and guided by a learning consultant. Online, in the SITRAIN training center or at your company.

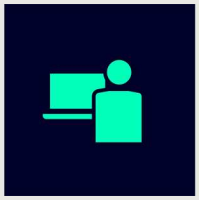

Self-reliant

Expand your knowledge self-determined with industry learning and work on your learning units at your own pace and according to your own schedule.

On demand

Get the knowledge you need, exactly when you need it. Be it to answer a current question or to work on a special topic.

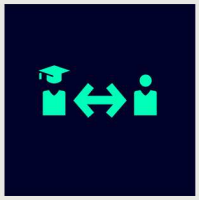

Individual

Talk directly with the learning consultant, clarify detailed questions and get personal coaching for transferring the learned topics to your own application.

Training cases catalog

https://www.siemens.com/sitrain-catalog-training-cases

www.siemens.com/sitrain

Find your local offer here

© Siemens 2024

Partners at Siemens

Overview

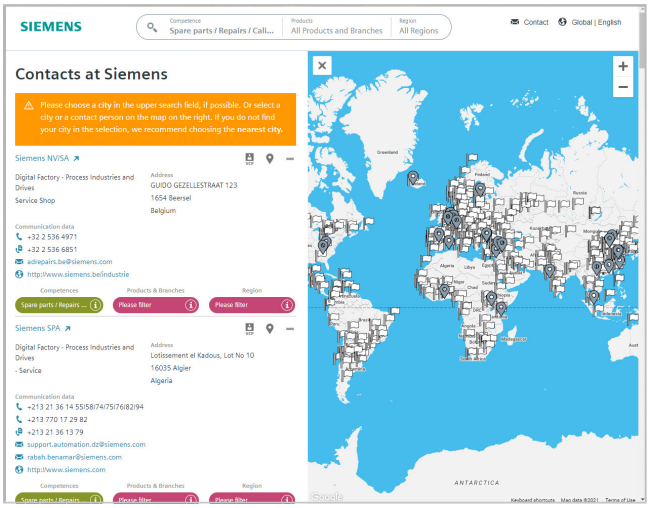

At your service locally, around the globe for consulting, sales, training, service, support, spare parts on the entire portfolio of Siemens.

Your partner can be found in our Personal Contacts Database at: www.siemens.com/automation-contact

You start by selecting

- the required competence,
- products and branches,
- a country and a city

or by a

- location search or free text search.

© Siemens 2024

Overview

Siemens Solution and Approved Partner – Partners for your success

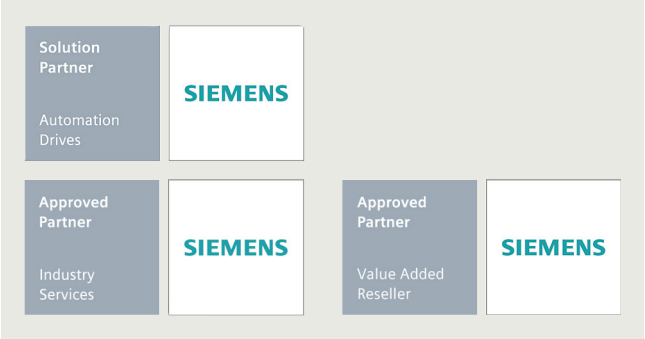

Highest competence in automation and drive technology

Siemens works closely together with selected partner companies around the world in order to ensure that customer requirements for all aspects of automation and drives are fulfilled as best as possible – wherever you are, and whatever the time.

We place great value on our customers acting in accordance with the same ideals which characterize Siemens as a whole: Competence, professionalism and quality. That is why continuous development through qualification and certification measures in line with global standards is a central aspect of our Partner Program. This means that with our partners, you benefit from the same high quality standards all over the world.
The partner emblem is the symbol for tried and tested quality.

The partner network for industry

The Siemens Partner Program offers you expertise and experience close at hand.

Within our global network, we distinguish between Solution Partners and Approved Partners. We currently work with more than 1,500 Solution Partners around the world. Our network of over 150 Approved Partners continues to grow. In more than 80 countries worldwide.

Siemens Solution Partner – Automation Drives

At present we are working with more than 1,500 Solution Partners worldwide. They are characterized by extensive application, system and sector knowledge, as well as proven project experience, and are able to implement future-proof tailored solutions of the highest quality, based on our product and system portfolio.

Siemens Approved Partner – Value Added Reseller

With their detailed technical knowledge, Siemens Approved Partners – Value Added Resellers offer a combination of products and services that range from specialist technologies and customized modifications to the provision of high-quality system and product packages. They also provide qualified technical support and assistance.

Siemens Approved Partner – Industry Services

Siemens Approved Partner – Industry Services put their unique expertise entirely at the service of enhancing your productivity and can be instrumental in ensuring the availability of your plants.

Partner Finder

The ideal partner for your task is just a mouse click away!

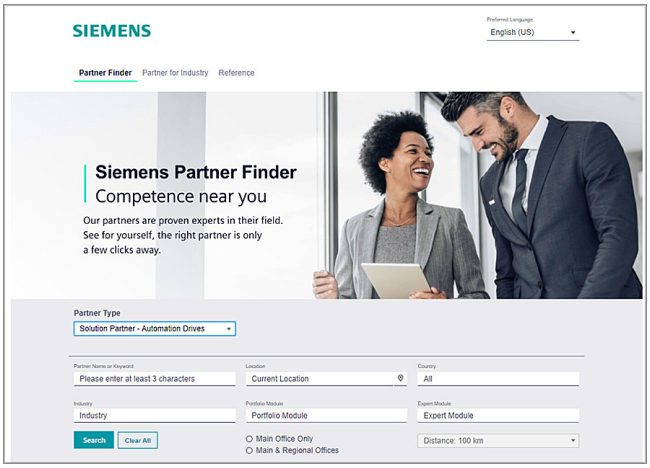

In the Siemens global Solution Partner Program, customers are certain to find the optimum partner for their specific requirements – with no great effort. The Partner Finder is basically a comprehensive database that showcases the profiles of all our partners.

Easy selection:
Set filters in the search screen form according to the criteria that are relevant to you. You can also directly enter the name of an existing partner.

Skills at a glance:
Gain a quick insight into the specific competencies of any particular partner with the reference reports.

Direct contact option:
Use our electronic query form:

www.siemens.com/partnerfinder

Additional information of the Siemens Partners for industry is available online at:

www.siemens.com/partnerprogram

© Siemens 2024

Overview

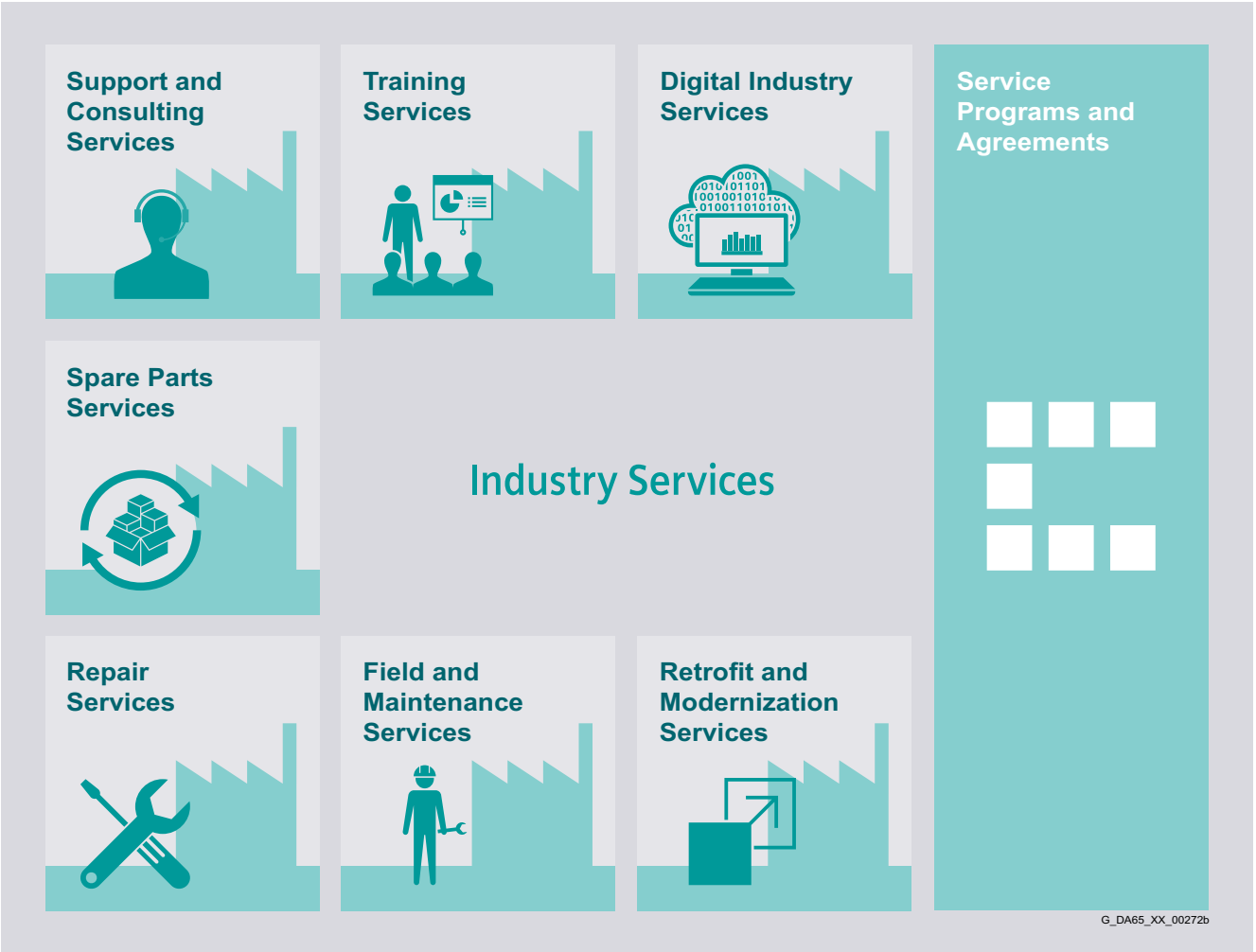

Keep your business running and shaping your digital future – with Industry Services

Optimizing the productivity of your equipment and operations can be a challenge, especially with constantly changing market conditions. Working with our service experts makes it easier. We understand your industry's unique processes and provide the services needed so that you can better achieve your business goals.

You can count on us to maximize your uptime and minimize your downtime, increasing your operations' productivity and reliability. When your operations have to be changed quickly to meet a new demand or business opportunity, our services give you the flexibility to adapt. Of course, we take care that your production is protected against cyber threats. We assist in keeping your operations as energy and resource efficient as possible and reducing your total cost of ownership. As a trend-setter, we ensure that you can capitalize on the opportunities of digitalization and by applying data analytics to enhance decision making: You can be sure that your plant reaches its full potential and retains this over the longer lifespan.

You can rely on our highly dedicated team of engineers, technicians and specialists to deliver the services you need – safely, professionally and in compliance with all regulations. We are there for you, where you need us, when you need us.

www.siemens.com/digital-enterprise-services

© Siemens 2024

Overview

Digital Industry Services

Digital Industry Services make your industrial processes transparent to gain improvements in productivity, asset availability, and energy efficiency.

Production data is generated, filtered and translated with intelligent analytics to enhance decision-making.

This is done whilst taking data security into consideration and with continuous protection against cyber-attack threats.
www.siemens.com/digital-enterprise-services

Training Services

From the basics and advanced to specialist skills, SITRAIN courses provide expertise right from the manufacturer – and encompass the entire spectrum of Siemens products and systems for the industry.

Worldwide, SITRAIN courses are available wherever you need a training course in more than 170 locations in over 60 countries.
https://support.industry.siemens.com/cs/ww/en/sc/2226

Support and Consulting Services

Industry Online Support site for comprehensive information, application examples, FAQs and support requests.

Technical and Engineering Support for advice and answers for all inquiries about functionality, handling, and fault clearance. The Service Card as prepaid support for value added services such as Priority Call Back or Extended Support offers the clear advantage of quick and easy purchasing.

Information & Consulting Services, e.g. SIMATIC System Audit; clarity about the state and service capability of your automation system or Lifecycle Information Services; transparency on the lifecycle of the products in your plants.
https://support.industry.siemens.com/cs/ww/en/sc/2235

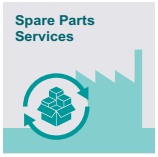

Spare Parts

Spare Parts Services are available worldwide for smooth and fast supply of spare parts – and thus optimal plant availability. Genuine spare parts are available for up to ten years. Logistic experts take care of procurement, transport, custom clearance, storage and order management. Reliable logistics processes ensure that components reach their destination as needed.

Since not all spare parts can be kept in stock at all times, Siemens offers a preventive measure for spare parts provisioning on the customer's premises with optimized **Spare Parts Packages** for individual products, custom-assembled drive components and entire integrated drive trains – including risk consulting.

Asset Optimization Services help you design a strategy for parts supply where your investment and carrying costs are reduced and the risk of obsolescence is avoided.
https://support.industry.siemens.com/cs/ww/en/sc/2110

Repair Services

Repair Services are offered on-site and in regional repair centers for fast restoration of faulty devices' functionality.

Also available are extended repair services, which include additional diagnostic and repair measures, as well as emergency services.
https://support.industry.siemens.com/cs/ww/en/sc/2154

Field and Maintenance Services

Siemens specialists are available globally to provide expert field and maintenance services, including commissioning, functional testing, preventive maintenance and fault clearance.

All services can be included in customized service agreements with defined reaction times or fixed maintenance intervals.
https://support.industry.siemens.com/cs/ww/en/sc/2265

Retrofit and Modernization Services

Provide a cost-effective solution for the expansion of entire plants, optimization of systems or upgrading existing products to the latest technology and software, e.g. migration services for automation systems.

Service experts support projects from planning through commissioning and, if desired over the entire extended lifespan, e.g. Retrofit for Integrated Drive Systems for an extended lifetime of your machines and plants.
https://support.industry.siemens.com/cs/ww/en/sc/2286

Service Programs and Agreements

A technical Service Program or Agreement enables you to easily bundle a wide range of services into a single annual or multi-year agreement.

You pick the services you need to match your unique requirements or fill gaps in your organization's maintenance capabilities.

Programs and agreements can be customized as KPI-based and/or performance-based contracts.
https://support.industry.siemens.com/cs/ww/en/sc/2275

© Siemens 2024

Overview

Siemens Industry and Online Support with some 1.7 million visitors per month is one of the most popular web services provided by Siemens. It is the central access point for comprehensive technical know-how about products, systems and services for automation and drives applications as well as for process industries.

In connection with the challenges and opportunities related to digitalization you can look forward to continued support with innovative offerings.

© Siemens 2024

Overview

Software types

Software requiring a license is categorized into types.
The following software types have been defined:

- Engineering software
- Runtime software

Engineering software

This includes all software products for creating (engineering) user software, e.g. for configuring, programming, parameterizing, testing, commissioning or servicing.

Data generated with engineering software and executable programs can be duplicated for your own use or for use by third-parties free-of-charge.

Runtime software

This includes all software products required for plant/machine operation, e.g. operating system, basic system, system expansions, drivers, etc.

The duplication of the runtime software and executable programs created with the runtime software for your own use or for use by third-parties is subject to a charge.

You can find information about license fees according to use in the ordering data (e.g. in the catalog). Examples of categories of use include per CPU, per installation, per channel, per instance, per axis, per control loop, per variable, etc.

Information about extended rights of use for parameterization/configuration tools supplied as integral components of the scope of supply can be found in the readme file supplied with the relevant product(s).

License types

Siemens Digital Industries and Smart Infrastructure offers various types of software license:

- Floating license
- Single license
- Rental license
- Rental floating license
- Trial license
- Demo license
- Demo floating license

Floating license

The software may be installed for internal use on any number of devices by the licensee. Only the concurrent user is licensed. The concurrent user is the person using the program. Use begins when the software is started.
A license is required for each concurrent user.

Single license

Unlike the floating license, a single license permits only one installation of the software per license.

The type of use licensed is specified in the ordering data and in the Certificate of License (CoL). Types of use include for example per instance, per axis, per channel, etc.

One single license is required for each type of use defined.

Rental license

A rental license supports the "sporadic use" of engineering software. Once the license key has been installed, the software can be used for a specific period of time (the operating hours do not have to be consecutive).
One license is required for each installation of the software.

Rental floating license

The rental floating license corresponds to the rental license, except that a license is not required for each installation of the software. Rather, one license is required per object (for example, user or device).

Trial license

A trial license supports "short-term use" of the software in a non-productive context, e.g. for testing and evaluation purposes.
It can be transferred to another license.

Demo license

The demo license support the "sporadic use" of engineering software in a non-productive context, for example, use for testing and evaluation purposes. It can be transferred to another license. After the installation of the license key, the software can be operated for a specific period of time, whereby usage can be interrupted as often as required.

One license is required per installation of the software.

Demo floating license

The demo floating license corresponds to the demo license, except that a license is not required for each installation of the software. Rather, one license is required per object (for example, user or device).

Certificate of License (CoL)

The CoL is the licensee's proof that the use of the software has been licensed by Siemens. A CoL is required for every type of use and must be kept in a safe place.

Downgrading

The licensee is permitted to use the software or an earlier version/release of the software, provided that the licensee owns such a version/release and its use is technically feasible.

Delivery versions

Software is constantly being updated.
The following delivery versions

- PowerPack
- Upgrade

can be used to access updates.

Existing bug fixes are supplied with the ServicePack version.

PowerPack

PowerPacks can be used to upgrade to more powerful software. The licensee receives a new license agreement and CoL (Certificate of License) with the PowerPack. This CoL, together with the CoL for the original product, proves that the new software is licensed.
A separate PowerPack must be purchased for each original license of the software to be replaced.

Upgrade

An upgrade permits the use of a new version of the software on the condition that a license for a previous version of the product is already held.
The licensee receives a new license agreement and CoL with the upgrade. This CoL, together with the CoL for the previous product, proves that the new version is licensed.
A separate upgrade must be purchased for each original license of the software to be upgraded.

© Siemens 2024

Software licenses

Overview

ServicePack

ServicePacks are used to debug existing products. ServicePacks may be duplicated for use as prescribed according to the number of existing original licenses.

License key

Siemens Digital Industries and Smart Infrastructure supplies software products with and without license keys.

The license key serves as an electronic license stamp and is also the "switch" for activating the software (floating license, rental license, etc.).

The complete installation of software products requiring license keys includes the program to be licensed (the software) and the license key (which represents the license).

Software Update Service (SUS)

As part of the SUS contract, all software updates for the respective product are made available to you free of charge for a period of one year from the invoice date. The contract will automatically be extended for one year if it is not canceled three months before it expires.

The possession of the current version of the respective software is a basic condition for entering into an SUS contract.

You can download explanations concerning license conditions from https://mall.industry.siemens.com/legal/ww/en/terms_of_trade_en.pdf

© Siemens 2024

1. General Provisions

By using this catalog you can purchase hard- and software products as well as services (together hereinafter referred to as "products") described therein from Siemens Aktiengesellschaft subject to the following Terms and Conditions of Sale and Delivery (hereinafter referred to as "T&C"). Note, for products purchased from any Siemens entity having a registered office outside of Germany, the respective terms and conditions of sale and delivery of the respective Siemens entity apply exclusively. The following T&C apply exclusively for orders placed with Siemens Aktiengesellschaft, Germany.

1.1 For customers with a seat or registered office in European Union

For customers with a seat or registered office in European Union, the following terms and conditions apply subordinate to T&C:

- for products, which include specific terms and conditions in the text of the product description, these specific terms and conditions shall apply and subordinate thereto,,
- for stand-alone software products and software products forming a part of a product or project, the "General Conditions for Software Products for Infrastructure & Industry Business (German law)"[1)] and/or
- for consulting services the "Allgemeine Geschäftsbedingungen für Beratungsleistungen für Infrastructure & Industry Geschäft (Deutsches Recht)"[1)] (available only in German) and/or
- for other services, the „Supplementary Terms and Conditions for Services for Infrastructure & Industry Business (German Law) ("BL")"[1)] and/or
- for other products the "General Conditions for the Supply of Products and Services of the Electrical and Electronics Industry"[1)].
  In case such products should contain Open Source Software, the conditions of which shall prevail over the "General Conditions for the Supply of Products and Services of the Electrical and Electronics Industry"[1)], the Product will be given a note as to which special conditions apply to this open source software. This shall apply mutatis mutandis for notices referring to other third-party software components.

1.2 For customers with a seat or registered office outside European Union

For customers with a seat or registered office outside European Union, the following terms and conditions apply subordinate to T&C:

- for products, which include specific terms and conditions in the description text, these specific terms and conditions shall apply and subordinate thereto,
- for consulting services the "Standard Terms and Conditions for Consulting Services for Infrastructure & Industry Business (Swiss Law)"[1)] and/or
- for other services the "International Terms & Conditions for Services"[1)] supplemented by "Software Licensing Conditions"[1)] and/or
- for other products the "International Terms & Conditions for Products"[1)] supplemented by "Software Licensing Conditions"[1)]

1.3 For customers with master or framework agreement

To the extent products offered are covered by an existing master or framework agreement, the terms and conditions of that agreement shall apply instead of T&C.

2. Prices

The prices are in € (Euro) ex point of delivery, exclusive of packaging.

The sales tax (value added tax) is not included in the prices. It shall be charged separately at the respective rate according to the applicable statutory legal regulations.

Prices are subject to change without prior notice. We will charge the prices valid at the time of delivery.

To compensate for variations in the price of raw materials (e.g. silver, copper, aluminum, lead, gold, dysprosium and neodym), surcharges are calculated on a daily basis using the so-called metal factor for products containing these raw materials.
A surcharge for the respective raw material is calculated as a supplement to the price of a product if the basic official price of the raw material in question is exceeded.

The metal factor of a product indicates the basic official price (for those raw materials concerned) as of which the surcharges on the price of the product are applied, and with what method of calculation. The metal factor, provided it is relevant, can be found in the respective product description.

An exact explanation of the metal factor can be downloaded at:

https://mall.industry.siemens.com/legal/ww/en/terms_of_trade_en.pdf

To calculate the surcharge (except in the cases of copper, dysprosium and neodym), the official price from the day prior to that on which the order was received or the release order was effected is used.

To calculate the surcharge applicable to copper, the official price from two days prior to that on which the order was received or the release order was effected is used.

To calculate the surcharge applicable to dysprosium and neodym ("rare earths"), the corresponding three-month basic average price in the quarter prior to that in which the order was received or the release order was effected is used with a one-month buffer (details on the calculation can be found in the explanation of the metal factor).

3. Additional Terms and Conditions

The dimensions are in mm. In Germany, according to the German law on units in measuring technology, data in inches apply only to devices for export.

Illustrations are not binding.

Insofar as there are no remarks on the individual pages of this catalog – especially with regard to data, dimensions and weights given – these are subject to change without prior notice.

[1)] The text of the Terms and Conditions of Siemens AG can be downloaded at
https://mall.industry.siemens.com/legal/ww/en/terms_of_trade_en.pdf

© Siemens 2024

4. Export Control and Sanctions Compliance

4.1 General

Customer shall comply with all applicable sanctions, embargoes and (re-)export control laws and regulations, and, in any event, with those of the European Union, the United States of America and any locally applicable jurisdiction (collectively "Export Regulations").

4.2 Checks for Products

Prior to any transaction by customer concerning products (including hardware, documentation and technology) delivered by Siemens, or products (including maintenance and technical support) performed by Siemens with a third party, customer shall check and certify by appropriate measures that

- (i) the customer's use, transfer, or distribution of such products, the brokering of contracts or the provision of other economic resources in connection with products will not be in violation of any Export Regulations, also taking into account any prohibitions to circumvent these (e.g., by undue diversion)
- (ii) the products are not intended or provided for prohibited or unauthorized non-civilian purposes (e.g. armaments, nuclear technology, weapons, or any other usage in the field of defense and military);
- (iii) customer has screened all direct and indirect parties involved in the receipt, use, transfer, or distribution of the products against all applicable restricted party lists of the Export Regulations concerning trading with entities, persons and organizations listed therein and
- (iv) products within the scope of items-related restrictions, as specified in the respective annexes to the Export Regulations, will not, unless permitted by the Export Regulations, be
  (a) exported, directly or indirectly (e.g., via Eurasian Economic Union (EAEU) countries), to Russia or Belarus, or
  (b) resold to any third party business partner that does not take a prior commitment not to export such products to Russia or Belarus.

4.3 Non-Acceptable Use of Software and Cloud Services

Customer shall not, unless permitted by the Export Regulations or respective governmental licenses or approvals,

(i) download, install, access or use the products from or in any location prohibited by or subject to comprehensive sanctions or subject or to license requirements according to the Export Regulations;
(ii) grant access to, transfer, (re-)export (including any "deemed (re-)exports"), or otherwise make available the products to any entity, person, or organization identified on a restricted party list of the Export Regulations;
(iii) use the products for any purpose prohibited by the Export Regulations (e.g. use in connection with armaments, nuclear technology or weapons);
(iv) upload to a products platform any customer content unless it is non-controlled (e.g. in the EU: AL = N;
in the U.S.: ECCN = N or EAR99);
(v) facilitate any of the afore mentioned activities by any user. Customer shall provide all users with all information necessary to ensure compliance with the Export Regulations.

4.4 Semiconductor Development

Customer will not, without advance written authorization from Siemens, use offerings for the development or production of integrated circuits at any semiconductor fabrication facility located in China meeting the criteria specified in the U.S. Export Administration Regulations, 15 C.F.R. 744.23.

4.5 Information

Upon request by Siemens, customer shall promptly provide Siemens with all information pertaining to users, the intended use and the location of use or the final destination (in the case of hardware, documentation and technology) of the products. Customer will notify Siemens prior to customer disclosing any information to Siemens that is defense-related or requires controlled or special data handling pursuant to applicable government regulations, and will use the disclosure tools and methods specified by Siemens.

4.6 Reservation

Siemens shall not be obligated to fulfill this agreement if such fulfillment is prevented by any impediments arising out of national or international foreign trade or customs requirements or any embargoes or other sanctions. Customer acknowledges that Siemens may be obliged under the Export Regulations to limit or suspend access by customer and/or users to products.

5. Miscellaneous

Errors excepted and subject to change without prior notice.

© Siemens 2024

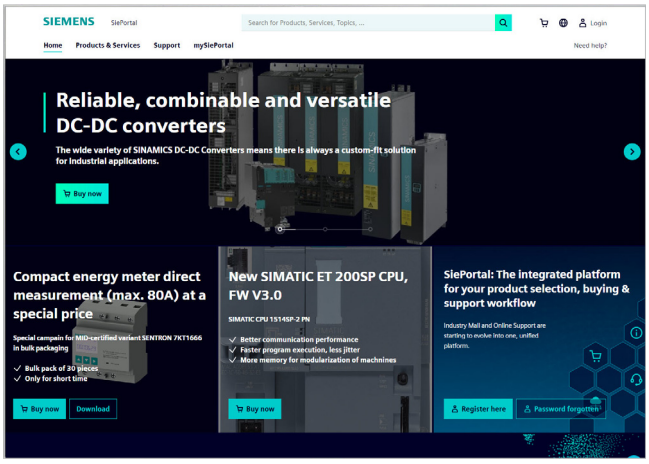

Easy product selection and ordering with SiePortal

SiePortal > Products & Services

The internet ordering platform of Siemens AG is located in SiePortal. It provides you with online access to a comprehensive product spectrum that is presented in an informative, well-organized way.

Powerful search functions help you select the required products, while configurators enable you to configure complex product and system components quickly and easily. CAx data are also available for you to use.

Data transfer allows the entire procedure, from selection through ordering to tracking and tracing, to be carried out online. Availability checks, individual customer discounting, and quotation preparation are also possible.

https://sieportal.siemens.com

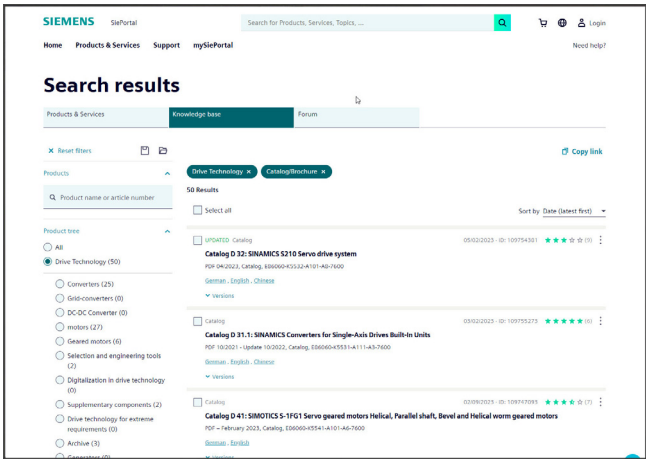

Downloading catalogs

SiePortal > Support > Knowledge base

You can download catalogs and brochures in PDF format from Siemens Industry Online Support without having to register.

The filter box makes it possible to perform targeted searches.

https://sieportal.siemens.com

© Siemens 2024

Cybersecurity information

Siemens provides products and solutions with industrial cybersecurity functions that support the secure operation of plants, systems, machines and networks.

In order to protect plants, systems, machines and networks against cyber threats, it is necessary to implement – and continuously maintain – a holistic, state-of-the-art industrial cybersecurity concept. Siemens' products and solutions constitute one element of such a concept.

Customers are responsible for preventing unauthorized access to their plants, systems, machines and networks. Such systems, machines and components should only be connected to an enterprise network or the internet if and to the extent such a connection is necessary and only when appropriate security measures (e.g. firewalls and/or network segmentation) are in place.

For additional information on industrial cybersecurity measures that may be implemented, please visit **www.siemens.com/cybersecurity-industry**

Siemens' products and solutions undergo continuous development to make them more secure. Siemens strongly recommends that product updates are applied as soon as they are available and that the latest product versions are used. Use of product versions that are no longer supported, and failure to apply the latest updates may increase customer's exposure to cyber threats.

To stay informed about product updates, subscribe to the Siemens Industrial Cybersecurity RSS Feed under
www.siemens.com/cert

Get more information

Comprehensive information concerning the SIMATIC PCS 7 process control system:
www.siemens.com/simatic-pcs7

Published by
Siemens AG

Digital Industries
Process Automation
Östliche Rheinbrückenstr. 50
76187 Karlsruhe, Germany

PDF (E86060-K4678-A111-C9-7600)
KG 0724 En
Produced in Germany
© Siemens 2024

Subject to changes and errors. The information given in this document only contains general descriptions and/or performance features which may not always specifically reflect those described, or which may undergo modification in the course of further development of the products. The requested performance features are binding only when they are expressly agreed upon in the concluded contract.

All product designations may be trademarks or product names of Siemens AG or other companies whose use by third parties for their own purposes could violate the rights of the owners.