SIEMENS

Edition 12/2023

Equipment Manual

SIMATIC

MICRO-DRIVE Servo Drive System

PDC600 Drive Controller

www.siemens.com/drives

Промэлектроника, sales@prom-elec.com

sales@prom-elec.com / ООО ПРОМЭЛЕКТРОНИКА

SIEMENS

SIMATIC

MICRO-DRIVE PDC600(F)

Equipment Manual

Preface

Documentation guide 1

Product overview 2

Connecting 3

Alarms, diagnostics, error messages and system events 4

Technical specifications 5

Response times A

Dimension drawing B

12/2023

A5E50502703-AB

Legal information

Warning notice system

This manual contains notices you have to observe in order to ensure your personal safety, as well as to prevent damage to property. The notices referring to your personal safety are highlighted in the manual by a safety alert symbol, notices referring only to property damage have no safety alert symbol. These notices shown below are graded according to the degree of danger.

⚠ **DANGER**
indicates that death or severe personal injury **will** result if proper precautions are not taken.

⚠ **WARNING**
indicates that death or severe personal injury **may** result if proper precautions are not taken.

⚠ **CAUTION**
indicates that minor personal injury can result if proper precautions are not taken.

NOTICE
indicates that property damage can result if proper precautions are not taken.

If more than one degree of danger is present, the warning notice representing the highest degree of danger will be used. A notice warning of injury to persons with a safety alert symbol may also include a warning relating to property damage.

Qualified Personnel

The product/system described in this documentation may be operated only by **personnel qualified** for the specific task in accordance with the relevant documentation, in particular its warning notices and safety instructions. Qualified personnel are those who, based on their training and experience, are capable of identifying risks and avoiding potential hazards when working with these products/systems.

Proper use of Siemens products

Note the following:

⚠ **WARNING**
Siemens products may only be used for the applications described in the catalog and in the relevant technical documentation. If products and components from other manufacturers are used, these must be recommended or approved by Siemens. Proper transport, storage, installation, assembly, commissioning, operation and maintenance are required to ensure that the products operate safely and without any problems. The permissible ambient conditions must be complied with. The information in the relevant documentation must be observed.

Trademarks

All names identified by ® are registered trademarks of Siemens Aktiengesellschaft. The remaining trademarks in this publication may be trademarks whose use by third parties for their own purposes could violate the rights of the owner.

Disclaimer of Liability

We have reviewed the contents of this publication to ensure consistency with the hardware and software described. Since variance cannot be precluded entirely, we cannot guarantee full consistency. However, the information in this publication is reviewed regularly and any necessary corrections are included in subsequent editions.

Siemens Aktiengesellschaft
Digital Industries
Postfach 48 48
90026 NÜRNBERG
GERMANY

A5E50502703-AB
Ⓟ 01/2024 Subject to change

Copyright © Siemens 2020 - 2023.
All rights reserved

Preface

Purpose of the documentation

This manual supplements the system manual SIMATIC MICRO-DRIVE Drive controller PDC (https://support.industry.siemens.com/cs/ww/en/view/109797859). The manual contains a compact description of the device-specific information. The system-related functions are described in the system manual. All system-spanning functions are described in the function manuals.

The information provided in this manual and the system manual enables you to commission the PDC600(F) drive controller.

Conventions

The statements made in this manual for the PDC600 drive controller also apply to the fail-safe variant PDC600F. Any differences are noted at the respective location.

The currents specified in this document with unit "A" correspond to the torque-generating current. Due to internal scaling, this value accurately corresponds to the peak value of the alternating change.

To distinguish, the effective value is marked with "A_{eff}".

STEP 7: In this documentation "STEP 7" is used as a synonym for all versions of the configuration and programming software "STEP 7 (TIA Portal)".

Please also observe notes marked as follows:

Note

A note contains important information on the product described in the documentation, on the handling of the product or on the section of the documentation to which particular attention should be paid.

Recycling and disposal

For environmentally friendly recycling and disposal of your old equipment, contact a certified electronic waste disposal company and dispose of the equipment according to the applicable regulations in your country.

Siemens provides products and solutions with industrial security functions that support the secure operation of plants, systems, machines and networks.

In order to protect plants, systems, machines and networks against cyber threats, it is necessary to implement – and continuously maintain – a holistic, state-of-the-art industrial security concept. Siemens' products and solutions constitute one element of such a concept.

Customers are responsible for preventing unauthorized access to their plants, systems, machines and networks. Such systems, machines and components should only be connected

to an enterprise network or the internet if and to the extent such a connection is necessary and only when appropriate security measures (e.g. firewalls and/or network segmentation) are in place.

For additional information on industrial security measures that may be implemented, please visit (https://www.siemens.com/industrialsecurity).

Siemens' products and solutions undergo continuous development to make them more secure. Siemens strongly recommends that product updates are applied as soon as they are available and that the latest product versions are used. Use of product versions that are no longer supported, and failure to apply the latest updates may increase customers' exposure to cyber threats.

To stay informed about product updates, subscribe to the Siemens Industrial Security RSS Feed visit (https://www.siemens.com/industrialsecurity).

Siemens Industry Online Support

You can find current information on the following topics quickly and easily here:

- **Product support**
  All the information and extensive know-how on your product, technical specifications, FAQs, certificates, downloads, and manuals.
- **Application examples**
  Tools and examples to solve your automation tasks – as well as function blocks, performance information and videos.
- **Services**
  Information about Industry Services, Field Services, Technical Support, spare parts and training offers.
- **Forums**
  For answers and solutions concerning automation technology.
- **mySupport**
  Your personal working area in Industry Online Support for messages, support queries, and configurable documents.

This information is provided by the Siemens Industry Online Support in the Internet (https://support.industry.siemens.com).

Industry Mall

The Industry Mall is the catalog and order system of Siemens AG for automation and drive solutions on the basis of Totally Integrated Automation (TIA) and Totally Integrated Power (TIP).

You can find catalogs for all automation and drive products on the Internet (https://mall.industry.siemens.com) and in the Information and Download Center.

Table of contents

Preface **3**

1 Documentation guide **7**

2 Product overview **11**

2.1 Area of application of the PDC drive controller 11

2.2 Properties 11

2.3 Power supply 15

2.4 Calculating the overload capability of the power unit 17

3 Connecting **19**

3.1 Terminal assignment 19

3.2 Schematic circuit diagram 23

3.3 Connecting the supply voltages 24

3.4 Connecting the motor 26

3.5 Connecting an external braking resistor 28

4 Alarms, diagnostics, error messages and system events **31**

4.1 Status and error display 31

5 Technical specifications **35**

5.1 Technical specifications 35

5.2 Drive controller derating 38

A Response times **41**

B Dimension drawing **43**

Documentation guide

1

The documentation for the MICRO-DRIVE servo drive system is arranged into three areas. This arrangement enables you to access the specific content you require.

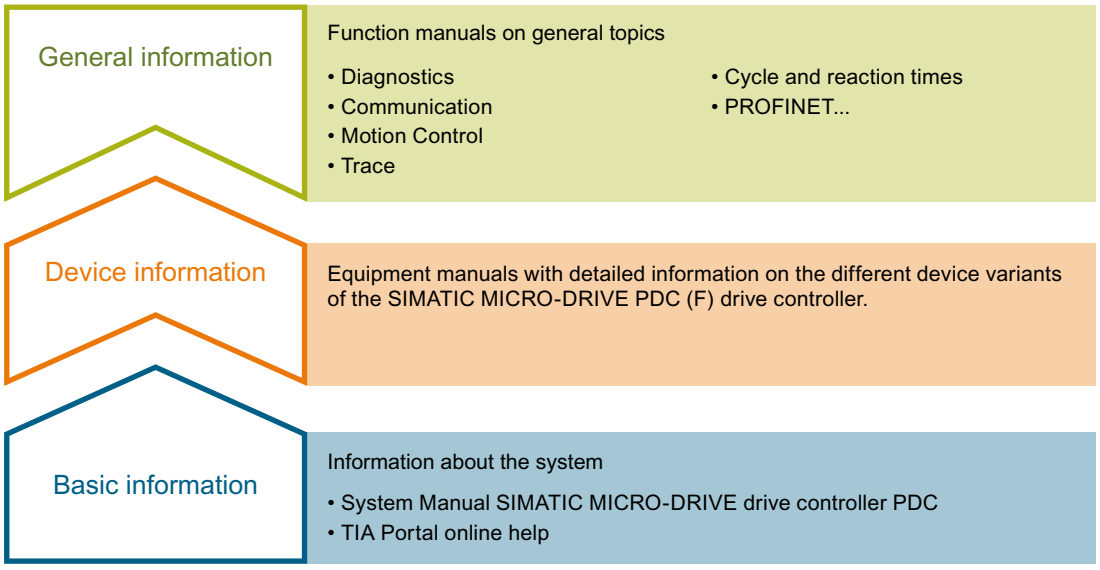

Basic information

The system manual describes in detail the configuration, installation, wiring and commissioning of the PDC drive controller. The STEP 7 online help supports you in the configuration and programming.

Device information

The manual contains a compact description of the device-specific information, such as properties, interfaces, wiring diagrams, display and operator controls and technical specifications.

General information

The function manuals contain detailed descriptions on general topics regarding the MICRO-DRIVE servo drive system and SIMATIC S7-1500 automation system, such as diagnostics, communication, Motion Control, Web server and OPC UA.

You can download the documentation free of charge from the Internet (https://support.industry.siemens.com/cs/ww/en/ps/25460).

SIMATIC S7-1500

You can download general information about the SIMATIC S7-1500/ET 200MP systems free of charge from the Internet (https://support.industry.siemens.com/cs/ww/en/view/109742691).

Changes and supplements to the manuals are documented in a Product Information.
You can download the Product Information free of charge from the Internet (https://support.industry.siemens.com/cs/us/en/view/68052815).

SIMATIC S7-1200

The system manual S7-1200 Programmable Controller (https://support.industry.siemens.com/cs/ww/en/view/109741593)provides information on the entire S7-1200 product family. In addition to the system manual, the S7-1200 Easy Book provides a general overview of the capabilities of the S7-1200 family. You can download or view the electronic manuals on the Siemens Industry Online Support (https://support.industry.siemens.com) website.

The Update to the S7-1200 System Manual (https://support.industry.siemens.com/cs/ww/en/view/109743003) contains updates to the system manual "SIMATIC S7-1200 Programmable Controller" that occurred after its publication.

"mySupport"

With "mySupport", your personal workspace, you make the best out of your Industry Online Support.

In "mySupport", you can save filters, favorites and tags, request CAx data and compile your personal library in the Documentation area. In addition, your data is already filled out in support requests and you can get an overview of your current requests at any time.

You must register once to use the full functionality of "mySupport".

You can find "mySupport" on the Internet (https://support.industry.siemens.com/My/ww/en).

"mySupport" - Documentation

In the Documentation area of "mySupport", you have the possibility to combine complete manuals or parts of them to make your own manual.
You can export the manual in PDF format or in an editable format.

You can find "mySupport" - Documentation on the Internet (https://support.industry.siemens.com/My/ww/en/documentation).

"mySupport" - CAx data

In the CAx data area of "mySupport", you can access the latest product data for your CAx or CAe system.

You configure your own download package with a few clicks.

In doing so you can select:

- Product images, 2D dimension drawings, 3D models, internal circuit diagrams, EPLAN macro files
- Manuals, characteristics, operating manuals, certificates
- Product master data

You can find "mySupport" - CAx data on the Internet (https://support.industry.siemens.com/my/ww/en/CAxOnline).

Application examples

The application examples support you with various tools and examples for solving your automation tasks. Solutions are shown in interplay with multiple components in the system - separated from the focus on individual products.

You will find the application examples on the Internet (https://support.industry.siemens.com/sc/ww/en/sc/2054).

TIA Selection Tool

With the TIA Selection Tool, you can select, configure and order devices for Totally Integrated Automation (TIA).
This tool is the successor of the SIMATIC Selection Tool and combines the known configurators for automation technology into one tool.
An integral component of the TIA Selection Tool is the calculation tool for the design and component selection of the SIMATIC MICRO-DRIVE drive system.

With the TIA Selection Tool, you can generate a complete order list from your product selection or product configuration.

You can find the TIA Selection Tool on the Internet (https://www.siemens.com/global/en/products/automation/topic-areas/tia/tia-selection-tool.html).

SIMATIC Automation Tool

You can use the SIMATIC Automation Tool to perform commissioning and maintenance activities simultaneously on various SIMATIC S7 stations and PROFINET devices as a bulk operation independent of the TIA Portal. For example:

- Searching of the network and creation of a table showing the accessible devices in the network.
- Flashing of device LEDs or HMI displays to locate a device
- Loading addresses (IP, subnet, gateway) to a device
- Downloading of the PROFINET name (station name) to a device
- Resetting of devices to factory settings (resetting interface parameters)
- Downloading of a firmware update to a device

You can find the SIMATIC Automation Tool on the Internet (https://support.industry.siemens.com/cs/ww/en/view/98161300).

PRONETA

SIEMENS PRONETA (PROFINET network analysis) allows you to analyze the plant network during commissioning. PRONETA features two core functions:

- The topology overview automatically scans the PROFINET and all connected components.
- PRONETA also scans: configuration of the station name, IP subnet mask and identification and maintenance data (I&M1..3)

You can find SIEMENS PRONETA on the Internet (https://support.industry.siemens.com/cs/ww/en/view/67460624).

Product overview 2

2.1 Area of application of the PDC drive controller

Areas of application

You can use the SIMATIC MICRO-DRIVE drive system in different industry sectors that require powerful positioning drives. SIMATIC MICRO-DRIVE has proven to be an ideal drive in numerous applications. The system excels in dynamic positioning tasks in production and manufacturing and in innovative application areas.

Examples of applications:

- Packaging machines
- Automatic assembly machines
- Metal forming machines
- Printing and labeling machines
- Winders/unwinders, e.g. in the textile, packing and printing industries and in electronics manufacturing
- Driving of shuttles for storage and retrieval machines and storage rack systems
- Automated guided vehicle systems (battery operation)
- Medical applications such as safe movement of MRI tables and exact automated alignment of ceiling-mounted X-ray devices.

2.2 Properties

Article number

PDC600 drive controller	6BK1630-1AA60-0AA0
PDC600F drive controller	6BK1630-2AA60-0AA0

View of the device

The figure below shows the PDC600 drive controller.

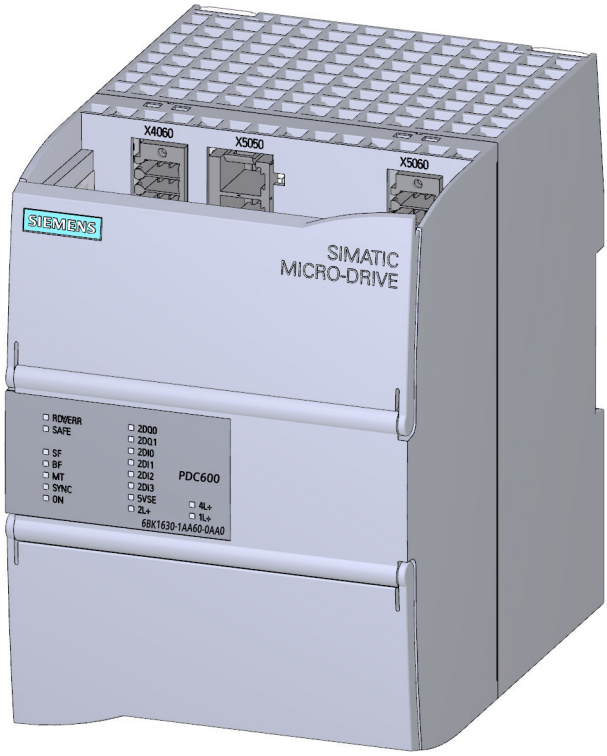

Figure 2-1 Product image PDC600

The fail-safe variant PDC600F has yellow enclosure markings as well as yellow connectors.

Properties

The PDC600 has the following technical properties:

Property	Description	Additional information
Control of EC motors	The PDC600 is a motor controller for three-phase motors (EC) with supply voltages to 48 V DC and permanent magnets. The control of DC motors is **not** supported by the PDC600.	Section Connecting the motor (Page 26).
Use in protective extra low voltage range < 42.4 V/60 V (SELV/PELV):	Supply voltage: • 24 V DC for the logic unit (1L+, 2L+) • 24 V DC to 48 V DC for the power unit (4L+) Maximum voltage of the power supply units under fault conditions: • < 42.4 V DC for the logic unit (1L+, 2L+) • < 60 V DC for the power unit (4L+)	Technical specifications (Page 35) section.
Current/Power	Output phase current for an EC motor: • Horizontal mounting (horizontal mounting rail): – Maximum 15.5 A or 11 A_{eff} – Maximum 31 A or 22 A_{eff} • Vertical mounting: – Nominal 12.9 A or 9.1 A_{eff} – Maximum 31 A or 22 A_{eff} Typical power output with 48 V supply: • Horizontal mounting: – Nominal 600 W – Maximum 1200 W • Vertical mounting: – Nominal 500 W – Maximum 1200 W	Technical specifications (Page 35) section.

Property	Description	Additional information
Braking resistor	The PDC600 has **no** internal braking resistor. To absorb the regenerative energy of the motor, you must connect an external braking resistor or switch on the energy recovery in the drive controller (see p0205).	System Manual SIMATIC MICRO-DRIVE drive controller PDC (https://support.industry.siemens.com/cs/ww/en/view/109797859)
Connection of external braking resistor (X5051)	The connection terminal (X5051) for an external braking resistor is designed for an average current of 15 A.	
Hardware STO	Safety function "Hardware STO" (Safe Torque Off) Safe torque off via onboard terminal (STO+ and STO-)	
PROFINET		
PROFINET interface with two ports (X2050 Port 1, X2060 Port 2).	You connect PROFINET IO via the RJ45 bus connector.	System Manual SIMATIC MICRO-DRIVE drive controller PDC (https://support.industry.siemens.com/cs/ww/en/view/109797859)

The PDC600F has the additional technical properties:

Property	Description	Additional information
PROFIsafe	Fail-safe communication via PROFINET for controlling and evaluating the safety functions of the drive controller.	System Manual SIMATIC MICRO-DRIVE drive controller PDC (https://support.industry.siemens.com/cs/ww/en/view/109797859)
STO (Safe Torque Off)	Stop function for safe torque shutdown according to stop category 0 according to EN 60204-1	
SS1 (Safe Stop 1)	Stop function according to Stop Category 1 according to EN 60204-1 (time-monitored)	
SSM (Safe Speed Monitor)	Safety speed monitoring according to IEC/EN 61800-5-2	
SLS (Safely Limited Speed)	Safely limited speed according to IEC/EN 61800-5-2	

Accessories

You can find information on the topic of "Accessories/spare parts" in the System Manual SIMATIC MICRO-DRIVE Drive controller PDC (https://support.industry.siemens.com/cs/ww/en/view/109797859).

2.3 Power supply

Infeed points

You supply the PDC at the logic unit (1L+, 2L+) and power unit (4L+) infeed points with the following voltages:

Table 2-1 Supply voltage of PDC

Infeed points	Nominal supply voltage	Static supply voltage	Dynamic supply voltage	Maximum voltage under fault conditions (power supply) for maintaining electrical and functional safety	Fusing
Logic unit 1L+, 2L+	24 V DC	19.2 to 28.8 V	18.5 to 30.2 V Non-periodic overvoltage max. 35 V for max. 500 ms with a recovery time of 50 s	Max. 42.4 V	Internal fusible link, not replaceable by user. Fusing on installation side necessary for through-wiring! Installation-side two-pole protection for 1L+/1M for SELV/PELV with common negative pole required for the supply of 1L+ and 4L+. Two-pole miniature circuit breaker
Power unit 4L+	24 to 48 V DC	16.8 to 52.8 V[1)]	16.8 to 52.8 V[1)]	Max. 60 V	Two-pole miniature circuit breaker

[1)] When energy recovery is activated, a supply voltage above 52.8 V DC (maximum value 58.8 V) is also permitted. Use a suitable bi-directional supply to ensure that the voltage at 4L+ never exceeds 60 V DC during operation or under fault conditions.
It is essential that you observe the information on recovery in the section "Energy recovery" in the System Manual SIMATIC MICRO-DRIVE Drive controller PDC (https://support.industry.siemens.com/cs/ww/en/view/109797859).

⚠ WARNING

Use separate power supply units to supply the logic unit and the power unit or a filter between the shared power supply unit and the power supply.

NOTICE

If you are using SELV/PELV with a common negative pole for the supply of 1L+ and 4L+, you must insert a two-pole miniature circuit breaker (2P, 240 V AC, tripping characteristic C, rated current 3 A, EN 60947-2) according to UL category DIVQ (UL 498) in the supply line to 1M/1L+.

You can find the article numbers of the miniature circuit breakers to be used in the section "Accessories/Spare parts" in the System Manual SIMATIC MICRO-DRIVE Drive controller PDC (https://support.industry.siemens.com/cs/ww/en/view/109797859).

Power supply for the power unit

You must feed the power supply for the power unit via terminals 4L+ and 4M at the X5050 interface (Figure 3-1 Connections of PDC600 drive controller with pin assignment (Page 19)).

NOTICE
A two-pole miniature circuit breaker (2P, 240 V AC, tripping characteristic C, rated current 25 A, EN 60947-2) according to UL category DIVQ (UL 498) must be inserted in the 4L+ and 4M feed line. You can find the article numbers of the miniature circuit breakers to be used in the section "Accessories/Spare parts" in the System Manual SIMATIC MICRO-DRIVE Drive controller PDC (https://support.industry.siemens.com/cs/ww/en/view/109797859). The miniature circuit breaker must be implemented with two poles even when using PELV.

In order for the DC link capacitors to be charged slowly when 4L+ is switched on, we recommend a primary-switched electronic power supply with current limitation. Only the required miniature circuit breaker has to be installed between the power supply and PDC, and not an operational switch.

If 4L+ is switched on via a suitable miniature circuit breaker, the following characteristic values result:

- Peak current: < 900 A
- Half value stream width: < 500 µs

NOTICE
The 4L+ input has no switch-on current limitation. Do not connect the terminals while live. This must also be observed for any upstream switching devices or miniature circuit breakers.

If, for operational reasons, the supply of 4L+ must be switched, we recommend implementing an pre-charging input circuit on the installation side. After pre-charging is finished, the pre-charging resistor must be bypassed by a suitable circuit before normal operation is started.

Key data for the dimensioning:

- Zero-signal current consumption 4L+: Approx. 15 mA (PDC not in operation)
- Internal DC link capacitance: 4000 µF +/-20%
- Pre-charging resistor is rated for the maximum voltage under fault conditions of the power supply unit ≤ 60 V
  When energy recovery is activated, a supply voltage above 57.6 V DC is also permitted. Use a suitable bi-directional supply to ensure that the voltage at 4L+ never exceeds 60 V DC during operation or under fault conditions.
- The power of the pre-charging resistor must be rated for continuous power (voltage at the pre-charging resistor is constantly equal to the maximum power supply voltage) or appropriate measures must be taken to protect against overtemperature/overload.

⚠ WARNING
Operation above the voltage setting range Under the given application conditions, ensure that the motor is not operated above the voltage setting range by selecting the appropriate motor and gear unit; otherwise, the DC-link voltage can increase above 60 V DC with inactive control.

Reference

Note the detailed information on the power supply in the System Manual SIMATIC MICRO-DRIVE Drive controller PDC (https://support.industry.siemens.com/cs/ww/en/view/109797859).

See also

Terminal assignment (Page 19)

2.4 Calculating the overload capability of the power unit

The following table shows the relationship between overload and recovery of the power unit.

Calculation

Table 2-2 Relationship between overload and recovery of the power unit

	PDC600
Rated power unit current (r0208)	15.5 A or 11 A_{eff}
Peak power unit current (r0209)	31 A or 22 A_{eff}
Duration of overload (with peak current r0209)	3 s
Duration of recovery (with $I_{recovery}$)	17 s
Reduced current $I_{recovery}$ (recovery of power unit)	10.7 A or 7.6 A_{eff}
$I_{recovery}$ referenced to rated current (r0208)	69%

Reference

Note the detailed information on overload protection in the System Manual SIMATIC MICRO-DRIVE Drive controller PDC (https://support.industry.siemens.com/cs/ww/en/view/109774126).

Connecting

3

3.1 Terminal assignment

Connection options on the PDC600

The figure below shows the connection options on the PDC600 drive controller.

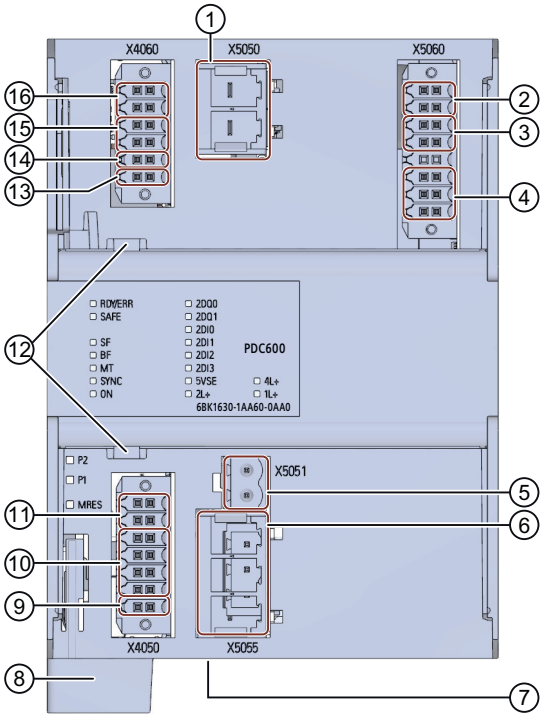

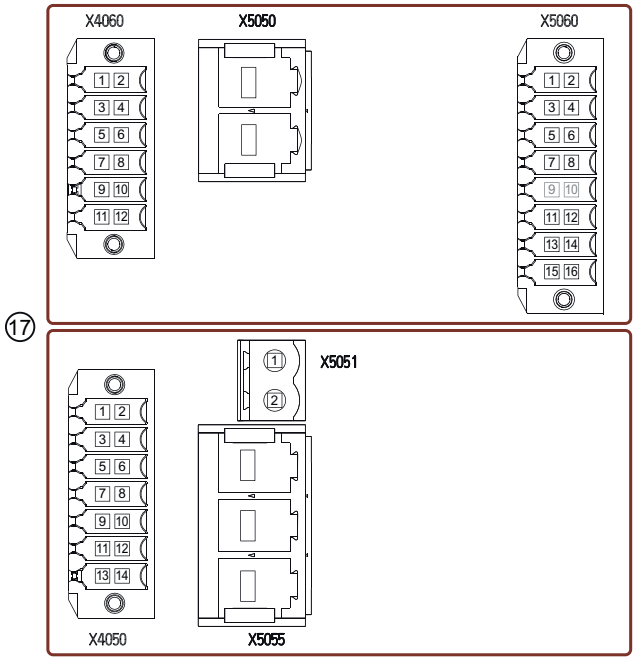

① Power supply of power unit (X5050)
② Logic supply of PDC (X5060)
③ Hardware STO (X5060)
④ SSI absolute encoder (X5060)
⑤ External braking resistor (X5051)
⑥ Motor phases (X5055)
⑦ Connection for grounding strap of the functional ground, covered, access from below
⑧ PROFINET Port 1 (X2050) and Port 2 (X2060), covered, access from below
⑨ Reference potential of encoder/Hall sensor supply (X4050)
⑩ Incremental encoder (X4050)
⑪ Hall sensor (X4050)
⑫ Wiring duct for connection cables
⑬ Reference potential of digital inputs/outputs (X4060)
⑭ 2 digital outputs (X4060)

⑮ 4 digital inputs (X4060)
⑯ Supply of inputs/outputs (X4060)
⑰ Pin assignment

Figure 3-1 Connections of PDC600 drive controller with pin assignment

> ⚠ **DANGER**
>
> **Hazardous Voltage**
> **Can Cause Death, Serious Injury, or Property Damage.**
>
> Hazardous electrical voltage can cause electric shock, burns and property damage.
>
> Disconnect the system and devices from the supply before commencing work.

References

Note the detailed information on selection of the installation location, mounting position, ambient temperature, minimum clearances, etc. in the System Manual SIMATIC MICRO-DRIVE Drive controller PDC (https://support.industry.siemens.com/cs/ww/en/view/109774126).

You can also find information on the topic of "Accessories/spare parts" in the System Manual SIMATIC MICRO-DRIVE Drive controller PDC.

The SIMATIC MICRO-DRIVE drive system is compatible with motors (Dunkermotoren, ebm-papst) and connecting cables (Harting, KnorrTec) of proven product partners of Siemens. This allows you to optimally combine suitable products from proven product partners for your individual application. You can find more information about the Siemens Product Partner Program on the Internet (https://new.siemens.com/global/en/company/topic-areas/partners/product-partners-industry.html).

Interfaces, cable lengths and cable types

The following cable lengths and cable types are permitted for the interfaces.

Table 3-1 Wiring rules for the interfaces

Plug connector	Function	Maximum cable length	Cable type	Cable cross-section
X100	Functional ground	0.1 m	Grounding strap	≥ 4 mm^2
X2050	PROFINET Port 1	100 m	Shielded cable, 2 x twisted pair, Cat 5	-
X2060	PROFINET Port 2	100 m	Shielded cable, 2 x twisted pair, Cat 5	-

Plug connector	Function	Maximum cable length	Cable type	Cable cross-section
X4050	Incremental encoder signals and supply	10 m	Shielded For differential wiring, one twisted pair per signal pair	Solid and stranded supply cable: AWG*: 22 to 16 or 0.34 mm^2 to 1.5 mm^2
	Hall sensor signals and supply	10 m	Shielded	
	Encoder and Hall interface with "All-in-one" plug-in cable	10 m	Shielded in "All-in-one" plug-in cable	
X4060	I/O, inputs and outputs	20 m	• < 2 m unshielded • ≥ 2 m shielded	Solid and stranded supply cable: AWG*: 22 to 16 or 0.34 mm^2 to 1.5 mm^2 For through-wiring for maximum permissible terminal currents, use AWG* 16 or 1.5 mm^2.
	Supply of inputs/outputs	20 m	• < 2 m unshielded • ≥ 2 m shielded	
X5050	Power supply of power unit (4L+, 4M)	20 m	• < 2 m unshielded • ≥ 2 m shielded	Solid and stranded supply cable: AWG*: 20 to 10 or 0.5 mm^2 to 4 mm^2 Use AWG* 10 or 4 mm^2 for the recommended circuit breaker.
X5051	Connection of external braking resistor (4R+, 4R-)	2 m	Unshielded	Solid and stranded supply cable: AWG*: 18 to 16 or 1.0 mm^2 to 1.5 mm^2
X5055	Motor phases	10 m	Shielded	Solid and stranded supply cable: AWG*: 18 to 10 or 1.0 mm^2 to 4 mm^2
	Motor phases with "All-in-one" plug-in cable	10 m	Shielded in "All-in-one" plug-in cable	

Plug connector	Function	Maximum cable length	Cable type	Cable cross-section
X5060	Logic supply PDC (1L+, 1M)	20 m	• < 2 m unshielded • ≥ 2 m shielded	Solid and stranded supply cable: AWG*: 20 to 16 or 0.5 mm^2 to 1.5 mm^2 For through-wiring for maximum permissible terminal currents, use AWG* 16 or 1.5 mm^2.
	Safe Torque Off	20 m	• < 2 m unshielded • ≥ 2 m shielded	Solid and stranded supply cable: AWG*: 20 to 16 or 0.5 mm^2 to 1.5 mm^2 For through-wiring for maximum permissible terminal currents, use AWG* 16 or 1.5 mm^2.
	SSI interface	20 m	Shielded, one twisted pair per signal pair	Solid and stranded supply cable: AWG*: 22 to 16 or 0.34 mm^2 to 1.5 mm^2

* American Wire Gauge

CABLE SPEC.	Note that connected mains lines must be designed according to the expected minimum and maximum ambient temperature. For the temperature increase at the terminal point, take into account an extra 20 °C as compared to the ambient temperature.

Installing/removing the connection plug

Installing the connection plug

Insert all plugs into the plug-in connector as far as they will go. In the case of possible vibration load, fasten the connectors to the PDC with the captive screws.

Removing the connection plug

Loosen the screwed connections of the connectors. Remove the connectors.

3.2 Schematic circuit diagram

The following figure shows the schematic circuit diagram of the PDC600 drive controller.

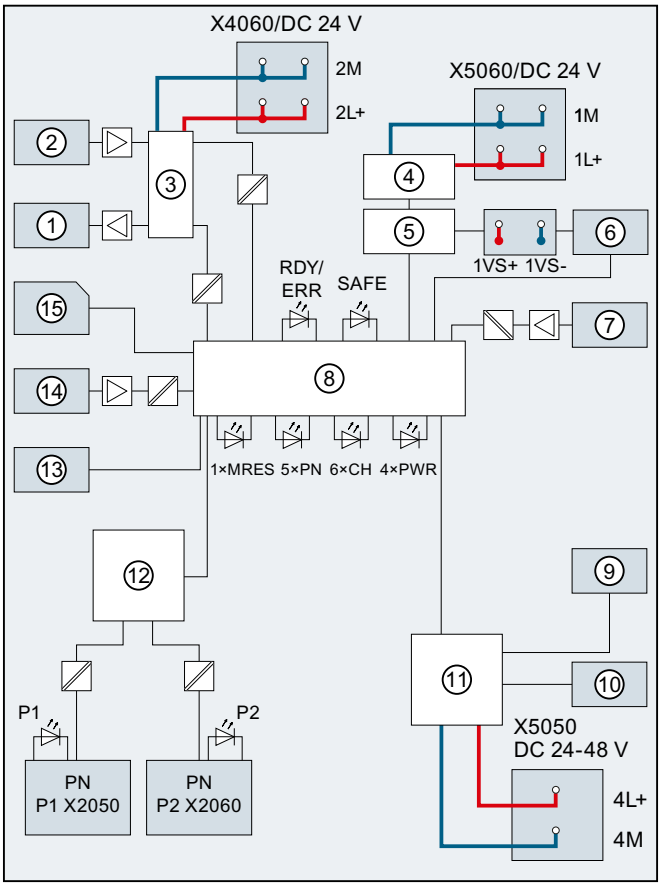

①	X4060: Connection for digital outputs	X4060 24 V DC	Infeed of supply voltage for digital inputs/outputs
②	X4060: Connection for digital inputs	X5060 24 V DC	Infeed of supply voltage for logic unit
③	Supply for digital inputs/outputs	X5050 24 - 48 V DC	Infeed of supply voltage for power unit
④	Supply for logic unit	PN P1 X2050	PROFINET interface Port 1
⑤	EMC filter, current limitation	PN P2 X2060	PROFINET interface Port 2
⑥	X5060: SSI encoder connection	xL+	Supply voltage
⑦	X5060: Hardware STO input	xM	Ground
⑧	Microcontroller unit, consisting of drive controller, diagnostics controller and communication controller	RDY/ ERR	PDC status LED (green/red)
⑨	X5055: Motor phases	SAFE	Safety function status LED (yellow)

⑩	X5051: Connection for external braking resistor	MRES	Service button LED
⑪	Supply for power unit	PN	PROFINET status display LEDs
⑫	2-port switch	CHx	Input/output LEDs
⑬	Service button	PWR	Supply voltage LEDs
⑭	X4050: Rotational speed acquisition (Hall sensor, incremental encoder)		
⑮	microSD memory card		

Figure 3-2 Circuit diagram of PDC600

3.3 Connecting the supply voltages

Introduction

You connect the 24 V DC supply voltage for the PDC logic unit and the inputs/outputs to terminal connectors X5060 (1L+ and 1M) and X4060 (2L+ and 2M).
Pins 3/4 (2L+) and Pins 1/2 (2M) of interface X4060 are electrically connected to one another. If you connect the supply voltage to Pin 3 (2L+) and Pin 1 (2M), you can use terminals 4 (2L+) and 2 (2M) to loop through the potential to Pins 3 (1L+) and 1 (1M) of interface X5060.

You connect the 24 V DC to 48 V DC supply voltage for the power unit to connector X5050 (4L+ and 4M).

Requirements

- Only wire the connection plug when the supply voltage is turned off.
- Observe the rules and regulations on operation described in the System Manual SIMATIC MICRO-DRIVE Drive controller PDC (https://support.industry.siemens.com/cs/ww/en/view/109774126).
- Observe the rules and regulations described in section Product overview (Page 11).

Required tool

Screwdriver (recommended):

- For double-level terminal connector, size 0.4 x 2.5 mm
- For single-level terminal connector, size 0.6 x 3.5 mm

Connection of supply voltages for the PDC logic unit and the inputs/outputs (24 V DC)

- Pin assignment: Interface X4060 for supply voltage of inputs/outputs

Table 3-2 Pin assignment: Interface X4060 for supply voltage of inputs/outputs

Pin	Designation	Function	Pin	Designation	Function
1	2M	Reference potential of supply of inputs/ outputs	2	2M	Reference potential of supply of inputs/ outputs
3	2L+	Supply of inputs/ outputs	4	2L+	Supply of inputs/ outputs

- Pin assignment: Interface X5060 for supply voltage of logic supply of PDC

Table 3-3 Pin assignment: Interface X5060 for supply voltage of logic supply of PDC

Pin	Designation	Function	Pin	Designation	Function
1	1M	Reference potential of logic supply of PDC	2	1M	Reference potential of logic supply of PDC
3	1L+	Logic supply of PDC	4	1L+	Logic supply of PDC

The logic supply voltages 1L+, 2L+ with associated ground potentials 1M, 2M are electrically isolated from one another.

Connection of supply voltage for the power unit (24 V DC to 48 V DC)

The figure below shows the connection of the 24 V DC to 48 V DC supply voltage for the power unit to the interface X5050:

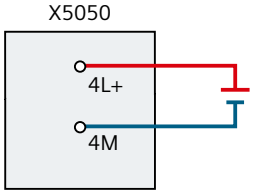

Figure 3-3 Connection of power unit supply

- Pin assignment: Interface X5050 for power supply of power unit

Table 3-4 Pin assignment: Interface X5050 for supply of power unit

Designation	Function
4L+	Power supply of power unit
4M	Reference potential of power supply of power unit

Connecting of solid conductors and stranded conductors (stranded wire) with end sleeve

To connect a wire, proceed as follows:

1. Strip 8 to 11 mm of insulation from the wires.
2. Crimp the stranded conductors with end sleeves.
3. Insert the wire into the spring-loaded terminal as far as it will go.

4. Push the wired connection plug into the socket of the PDC.
5. After connecting, check that the stranded wire or solid conductor cannot be pulled out again.

Connecting of conductors: stranded, without end sleeve, unprocessed

To connect a wire without end sleeve, follow these steps:

1. Strip 8 to 11 mm of insulation from the wires.
2. Press the spring release with the screwdriver, and insert the wire into the spring-loaded terminal as far as it will go.
3. Let go of the spring release with the screwdriver.
4. Push the wired connection plug into the socket of the PDC.
5. After connecting, check that the stranded wire cannot be pulled out again.

Disconnecting a cable

Press the spring release as far as it will go with the screwdriver. Remove the wire.

Reference

Note the detailed information on the topic "Connecting" in the System Manual SIMATIC MICRO-DRIVE Drive controller PDC (https://support.industry.siemens.com/cs/ww/en/view/109774126).

3.4 Connecting the motor

Reference

The SIMATIC MICRO-DRIVE drive system is compatible with motors (Dunkermotoren, ebm-papst) and connecting cables (Harting, KnorrTec) of proven product partners of Siemens. This allows you to optimally combine suitable products from proven product partners for your individual application. You can find more information about the Siemens Product Partner Program on the Internet (https://new.siemens.com/global/en/company/topic-areas/partners/product-partners-industry.html).

Connections for motor phases

The figure below shows the connection of the motor phases to the interface X5055:

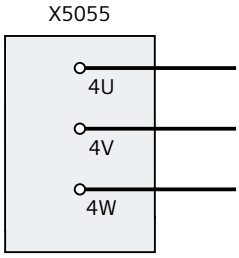

Figure 3-4 Connection of motor phases of EC motors

⚠ WARNING

Operation above the voltage setting range

Under the given application conditions, ensure that the motor is not operated above the voltage setting range by selecting the appropriate motor and gear unit; otherwise, the DC-link voltage can increase above 60 V DC with inactive control.

Pin assignment

- Interface X5055 for motor phases

Table 3-5 Pin assignment: Interface X5055 for motor phases

Designation	Function
4U	Motor phase U
4 V	Motor phase V
4W	Motor phase W

Reference

Note the detailed information on the topic "Connecting" in the System Manual SIMATIC MICRO-DRIVE Drive controller PDC (https://support.industry.siemens.com/cs/ww/en/view/109774126).

3.5 Connecting an external braking resistor

Connecting an external braking resistor

⚠ WARNING

Damage to braking resistor - Risk of fire!

You must implement fire prevention measures for the external braking resistor (e.g. fire protection housing, temperature fuse). The resistance of the externally connectable braking resistor must be at least 3 ohms.

Note

The connection terminal (X5051) for an external braking resistor is monitored by the drive controller. In the event of a corresponding overload, warning A61059.22 (warning threshold I2t monitoring connection of external braking resistor reached) is reported. If the limit value is exceeded, the system is switched off with the alarm message F61059.18 (limit I2t monitoring connection of external braking resistor exceeded).

The figure below shows the connection of an external braking resistor to interface X5051 (and X4060):

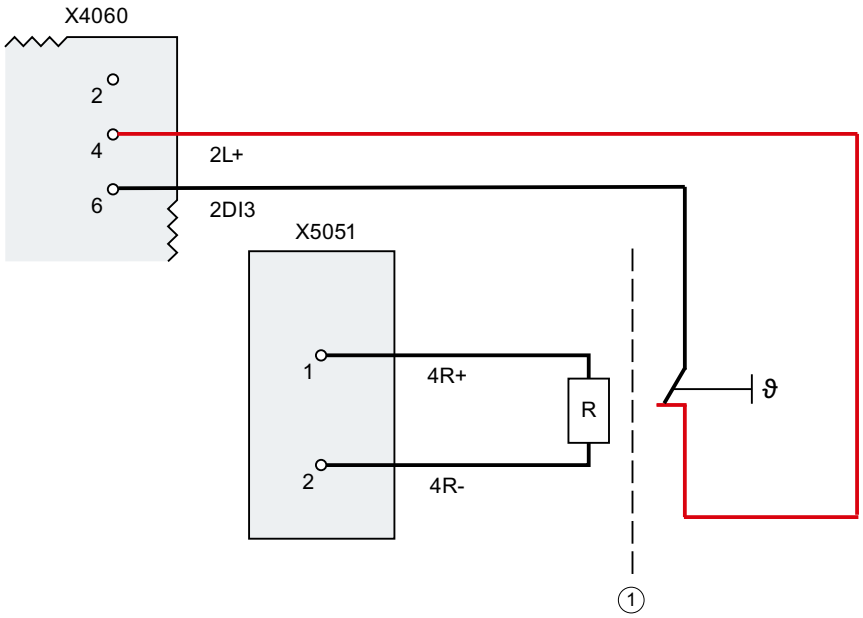

①	Basic insulation	4R+, 4R-	Connection for external braking resistor
xL+	Supply voltage	R	External braking resistor
2DIx	Digital input		

Figure 3-5 Connection of external braking resistor (example)

Pin assignment

- Interface X5051 for ext. braking resistor (2-pole)
- Interface X4060, for example, interconnected with external temperature sensor

Table 3-6 Pin assignment: Connecting an external braking resistor

Pin	Designation	Function
Interface X5051		
1	4R+	Connection of external braking resistor
2	4R-	
Interface X4060 (example)		
4	2L+	For example, interconnected with external temperature sensor
6	2DI3	

Reference

Note the detailed information on connection of an external braking resistor in the System Manual SIMATIC MICRO-DRIVE Drive controller PDC (https://support.industry.siemens.com/cs/ww/en/view/109774126).

You can also find information on the topic of "Accessories/spare parts" in the System Manual SIMATIC MICRO-DRIVE Drive controller PDC.

Alarms, diagnostics, error messages and system events

4

4.1 Status and error display

The PDC has LED displays for indicating the current operating state and the diagnostics status.

The "RDY/ERR" LED indicates the status of the drive state.

Table 4-1 Meaning of the LED

RDY/ERR LED	Meaning
LED off	The drive is ready for operation.
LED lit green	The drive is in operation.
LED flashes red	There is an operating fault.

The "SAFE" LED indicates the status of the Safety Integrated functions. The LEDs assume different statuses during startup. The displays of the LEDs operate independent of one except during firmware update. The figure below shows the various LED displays on the PDC.

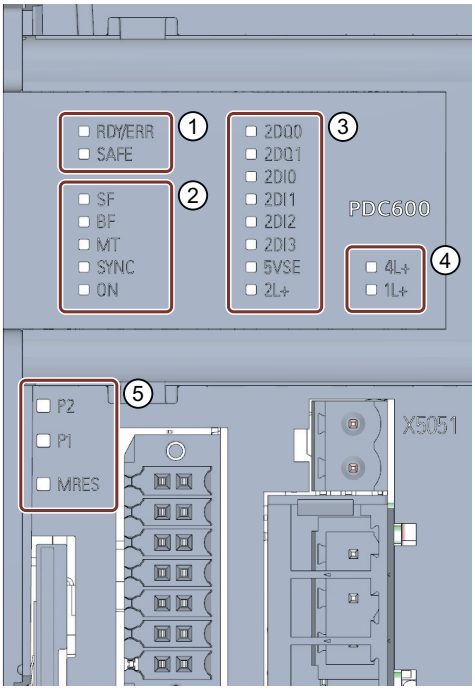

① Diagnostic LEDs for the drive controller:
- RDY/ERR = Drive status
- SAFE = Safety function status

② Diagnostic LEDs for the PROFINET communication:
- SF = PROFINET group error
- BF = PROFINET bus error
- MT = PROFINET maintenance request
- SYNC = PROFINET isochronous mode (IRT)
- ON = PROFINET communication started

③ Diagnostic LEDs for the sensor unit:
- 2DQx/2DIx = Status of digital inputs/outputs
- 5VSE = Output of supply voltage of motor encoder
- 2L+ = Infeed of supply voltage for the sensor unit

④ Diagnostic LEDs for power unit and logic unit:
- 4L+ = Infeed of supply voltage of power unit
- 1L+ = Infeed of supply voltage of logic unit

⑤ Diagnostic LEDs PROFINET ports and service (behind the lower front cover):
- P1/P2 = Status information of PROFINET port
- MRES = Service function status

Figure 4-1 LED displays

You can find detailed information and descriptions for the individual fault and alarm messages and the meanings of the LEDs for the status of the drive controller in the System Manual SIMATIC MICRO-DRIVE Drive controller PDC (https://support.industry.siemens.com/cs/ww/en/view/109774126)

You can find additional information on the topic of "Interrupts" in the STEP 7 online help.

You can find additional information on the topic of "Diagnostics" and "System alarms" in function manual Diagnostics (https://support.industry.siemens.com/cs/ww/en/view/59192926).

Technical specifications

5

5.1 Technical specifications

The following table shows the technical specifications of the PDC600 (6BK1630-1AA60-0AA0) and PDC600F(6BK1630-2AA60-0AA0) as of 09/2020.

You can find a data sheet including daily updated technical specifications on the Internet (https://support.industry.siemens.com/cs/ww/en/ps/25460).

Article number	6BK1630-1AA60-0AA0	6BK1630-2AA60-0AA0
General information		
Product type designation	EC motor controller	
HW functional status	FS01	
Product description	Control of EC motors	
Mean time between failures (MTBF)	100 000 h	
Product function		
• Isochronous mode	Yes	
• Four-quadrant operation	Yes	
• Speed control with encoder	Yes	
• Speed control without encoder	No	
• Safety Functions	Yes; STO	Yes; STO, SS1, SLS, SSM
Protection function		
• Undervoltage protection	Yes	
• Overvoltage protection	Yes	
• Overload protection	Yes	
• Ground-fault protection	Yes	
• Short-circuit protection	Yes	
Engineering with		
• STEP 7 TIA Portal configurable/integrated from version	V14 SP1	
Installation type/mounting		
Mounting type	35 mm rail, screw mounting	
Type of ventilation	Convection cooling	
Supply voltage		
Design of the power supply	DC	
Rated value (DC)	24 V	
Supply voltage of the motor		
• Type of motor voltage	24 ... 48 V DC, SELV / PELV	
• permissible range, lower limit (DC)	16.8 V	
Input current		
Current consumption (rated value)	0.5 A	
Current consumption, max.	1 A	
Current consumption for the electronics, max.	0.8 A	
Inrush current, max.	1.6 A	
Output current		
Current output (rated value)	11 A	
Output current, max.	22 A	
Output frequency	500 Hz	
Power loss		
Power loss, max.	25 W	
Digital inputs		

Article number	6BK1630-1AA60-0AA0	6BK1630-2AA60-0AA0
Number of digital inputs	4	
Number of safety inputs	1; For STO, antivalent (2-pin) - 24 V DC	
Digital outputs		
Type of digital output	Source output (PNP, current-sourcing)	
Number of digital outputs	2	
Number of safety outputs	0	
Encoder		
Connectable encoders		
• Incremental encoder (symmetrical)	Yes; Up to 200 kHz	
• Incremental encoder (asymmetrical)	Yes	
• Absolute encoder (SSI)	Yes; 350 kHz	
Interfaces		
Number of industrial Ethernet interfaces	0	
Number of PROFINET interfaces	2	
Standards, approvals, certificates		
CE mark	Yes	
CSA approval	No	
cULus	Yes	
RCM (formerly C-TICK)	Yes	
KC approval	Yes	
EAC (formerly Gost-R)	Yes	
China RoHS compliance	Yes	
Highest safety class achievable in safety mode		
• Performance level according to ISO 13849-1	d	
• SIL acc. to IEC 61508	SIL 2	
Ambient conditions		
Ambient temperature during operation		
• min.	-20 °C	
• max.	60 °C	
Ambient temperature during storage/transportation		
• Storage, min.	-20 °C	
• Storage, max.	80 °C	
Relative humidity		
• Operation, max.	95 %; no condensation	95 %
• Storage, max.	95 %; no condensation	95 %
Vibrations		
• Vibration resistance during operation acc. to IEC 60068-2-6	5 ... 8.5 Hz / 3.5 mm, 8.5 ... 150 Hz / 1 g; for wall mounting: 9 ... 29 Hz / 1.5 mm, 29 ... 200 Hz / 5 g	
• Vibration resistance during storage acc. to IEC 60068-2-6	5 ... 8.5 Hz / 3.5 mm, 8.5 ... 500 Hz / 1 g	
Shock testing		

Article number	6BK1630-1AA60-0AA0	6BK1630-2AA60-0AA0
• Shock resistance during operation acc. to IEC 60068-2-27	15 g / 11 ms; for wall mounting: 5 g / 30 ms, 15 g / 11 ms	
Cables		
Cable length for motor, shielded, max.	10 m	
Dimensions		
Width	90 mm	
Height	125 mm; 136 mm with protective collar for PN connector	
Depth	120 mm	
Weights		
Weight, approx.	0.65 kg	
Other		
Braking chopper	Yes; External resistance	

You can find information on the general technical specifications, such as standards and approvals, electromagnetic compatibility, protection class, etc., in the System Manual SIMATIC MICRO-DRIVE Drive controller PDC (https://support.industry.siemens.com/cs/ww/en/view/109774126).

5.2 Drive controller derating

The maximum permissible output current for PDCs of performance class 600 W must be reduced as follows depending on the installation altitude, mounting position and ambient temperature.

The derating relates to the rated current of the power unit. The maximum current from the power unit may be taken at an average speed of > 10 Hz (corresponds to the rotating field frequency > 10 Hz for EC motors over a period of 20 s). At frequencies < 10 Hz, the maximum permissible current corresponds to the rated current of the power unit.

Derating as a function of the installation altitude

For all permissible mounting types, starting from an installation altitude of 1000 m, a derating of 10% current per additional 1000 m elevation gain applies. In this case, the motor current and the output current of the digital outputs must be reduced.

All other functions do not have to be reduced up to the maximum installation altitude.

The figure below shows the maximum permitted output current as a function of installation altitude for the derating.

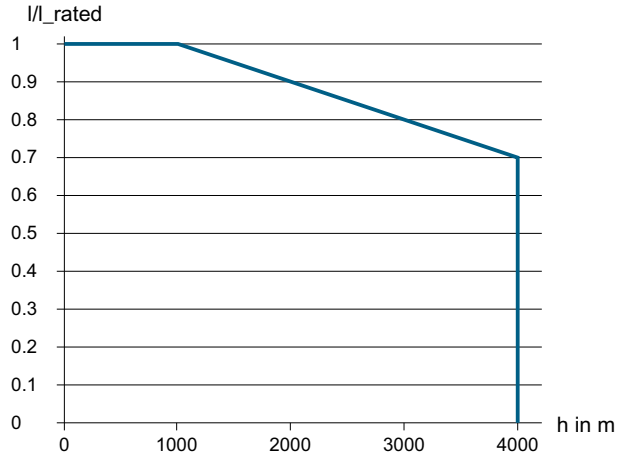

Figure 5-1 Derating for PDC600(F) as a function of the installation height

Derating as a function of the mounting position

For vertical mounting (vertical mounting rail), the PDC600 may be operated up to a maximum ambient temperature of 40 °C. A derating of the power output to 500 W must be observed; this corresponds to a rated current of the power section of 9.1 A_{eff}.

Derating depending on the ambient temperature

For horizontal mounting (horizontal mounting rail), no restrictions are necessary for the PDC600 up to an ambient temperature of 40 °C.

A derating of 2.5%/K must be observed up to a maximum temperature of 60 °C. The motor current must be reduced.

Note

Note the simultaneity factors of the inputs/outputs in this section.

The figure below shows the maximum permitted output current of the power unit as a function of the ambient air temperature for the derating.

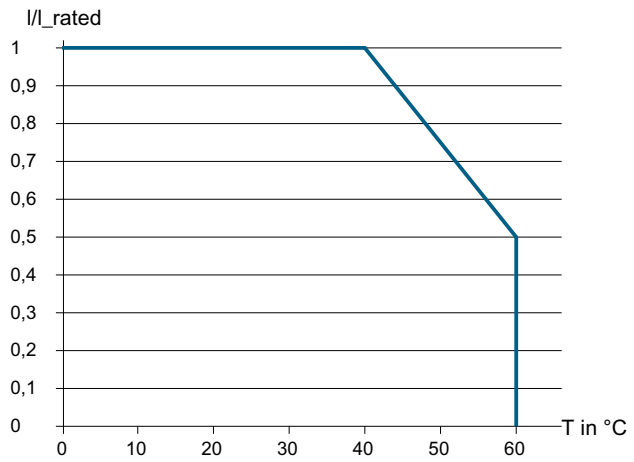

Figure 5-2 Derating for PDC600(F) as a function of the ambient temperature

Coincidence factors of inputs/outputs

Also note the permissible coincidence factors of the inputs/outputs.

At ambient temperatures above 40 °C, the sum of the output currents of the two outputs (DQ) must not exceed 1 A.

This can be achieved either by operating the two outputs (DQ) alternately or by operating each of the outputs with a part of the total current of 1 A.

All inputs (DI) may be operated simultaneously up to 60 °C. No deratings with respect to ampacity exist as a function of ambient temperature.

Response times

A

The response time is the time between the detection of an input signal and the change of a linked output signal. You will find the response times of the SIMATIC MICRO-DRIVE drive system on the Internet (https://support.industry.siemens.com/cs/ww/en/view/109777254). The response times of the drive enter into the calculation of the response time of the F-system.

Dimension drawing

B

This appendix contains the dimension drawings of the SIMATIC MICRO-DRIVE PDC600 installed on a mounting rail. You must take into account the dimensions for installation in cabinets, control rooms, etc.

Dimension drawings of the SIMATIC MICRO-DRIVE PDC600(F)

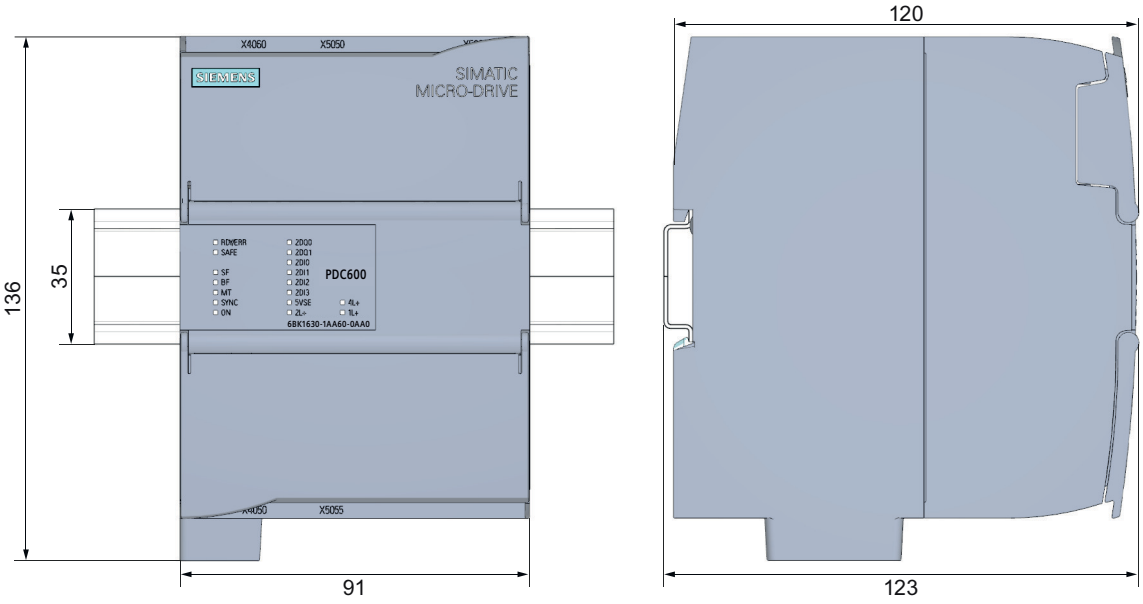

Figure B-1 Dimension drawings of SIMATIC MICRO-DRIVE PDC600(F), front and side view (as examples, depending on mounting rail type used)