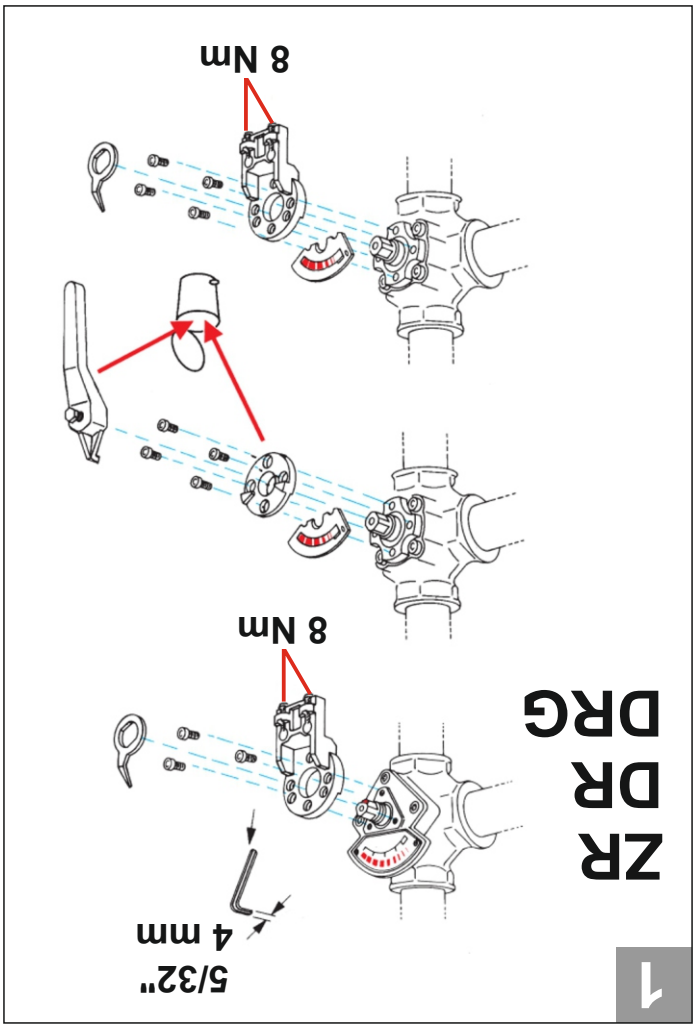

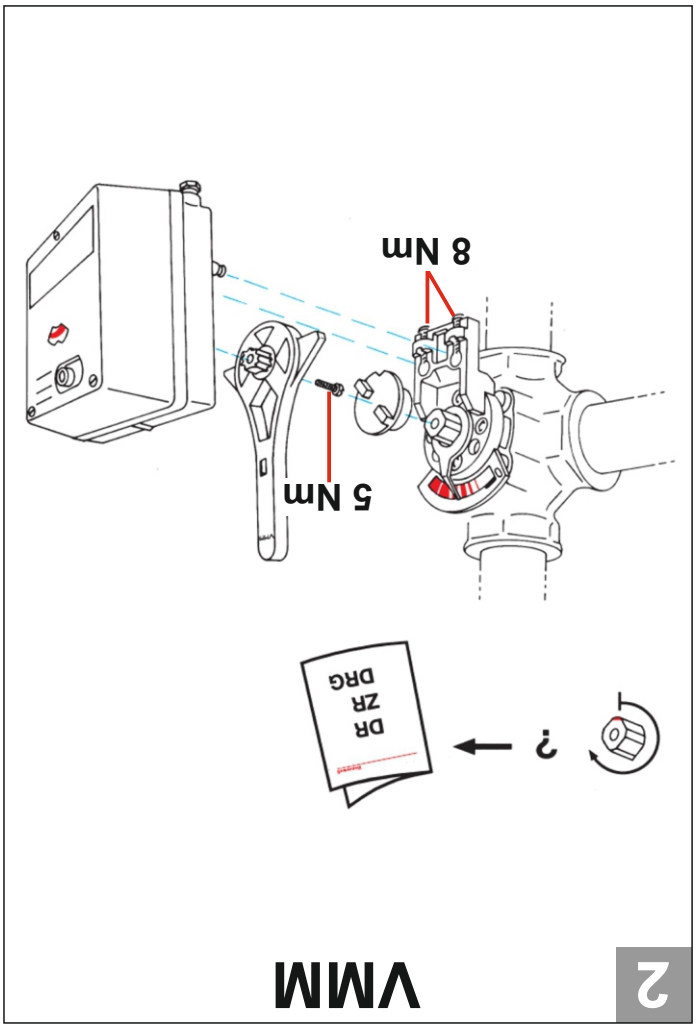

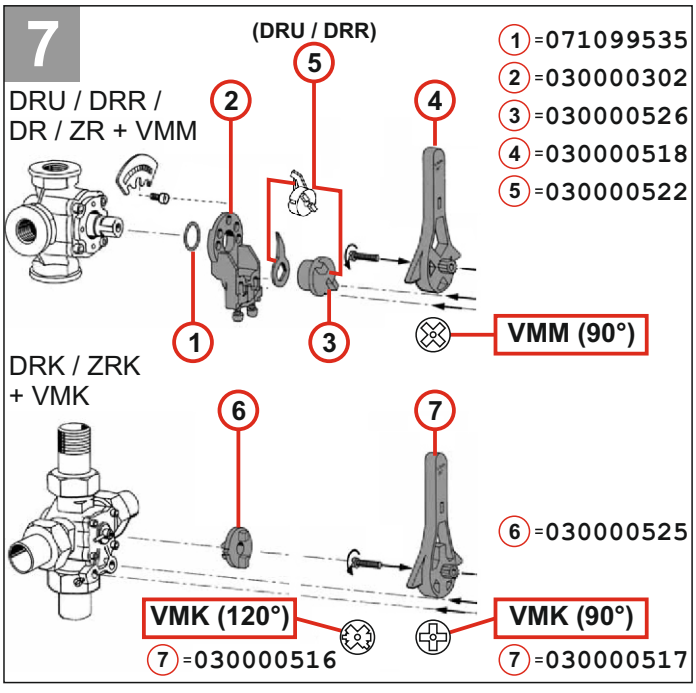

WEEE Directive 2012/19/EU
The product (and contained batteries) should not be disposed of with other household waste. Check for the nearest authorized collection centers or authorized recyclers. The correct disposal of end-of-life equipment will help prevent potential negative consequences for the environment and human health.

resideo

Manufactured for and on behalf of
Pittway Sàrl, Z.A., La Pièce 6, 1180 Rolle, Switzerland

MU1B-1701GE23 R1122

For more information
homecomfort.resideo.com/europe

Subject to change.
© 2022 Resideo Technologies, Inc.
All rights reserved.

This document contains proprietary information of Pittway Sàrl and its affiliated companies and is protected by copyright and other international laws. Reproduction or improper use without specific written authorization of Pittway Sàrl is strictly forbidden.

ООО Промэлектроника, sales@prom-elec.com

sales@prom-elec.com / ООО ПРОМЭЛЕКТРОНИКА

resideo

Centra
VMM, VMK

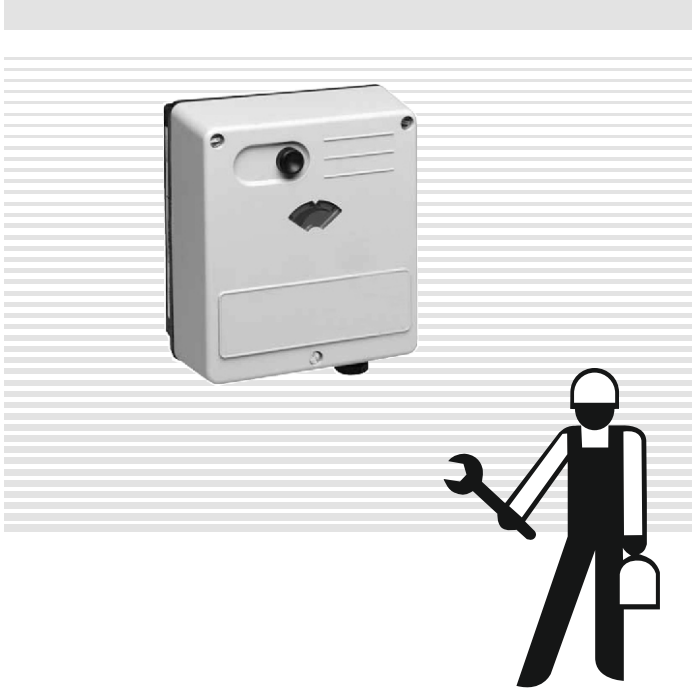

3 VMK (90°)

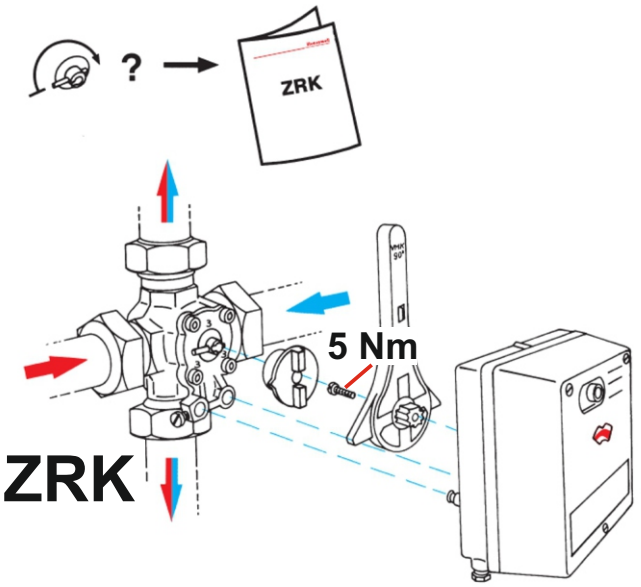

4 VMM/VMK

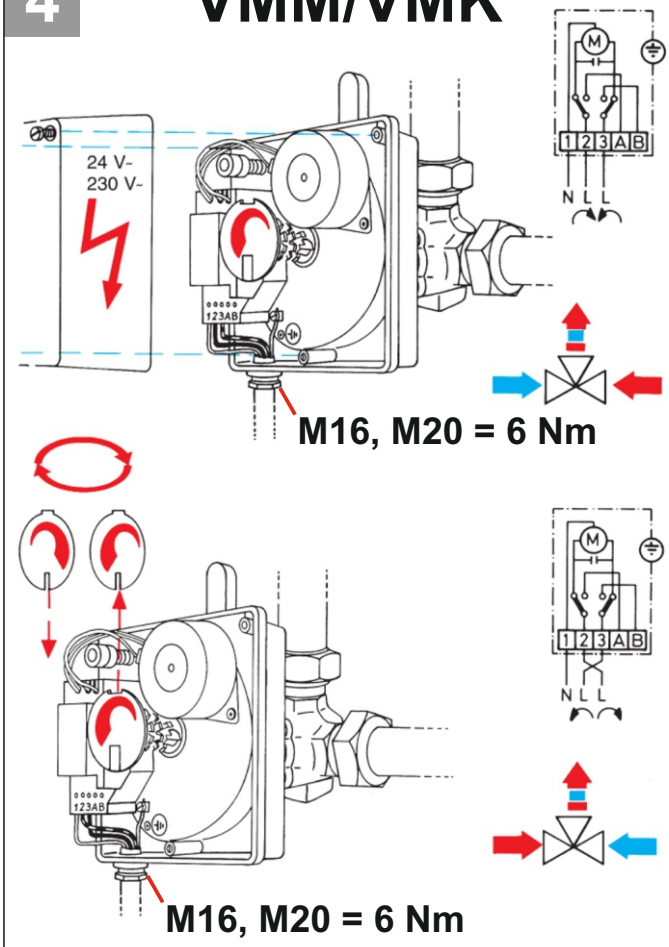

5 VMM/VMK

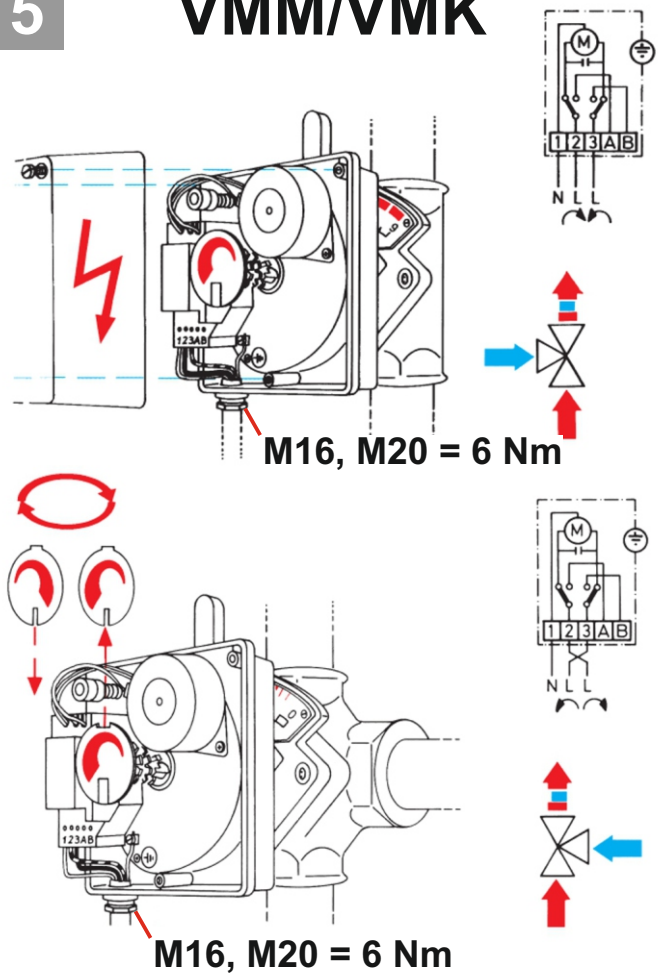
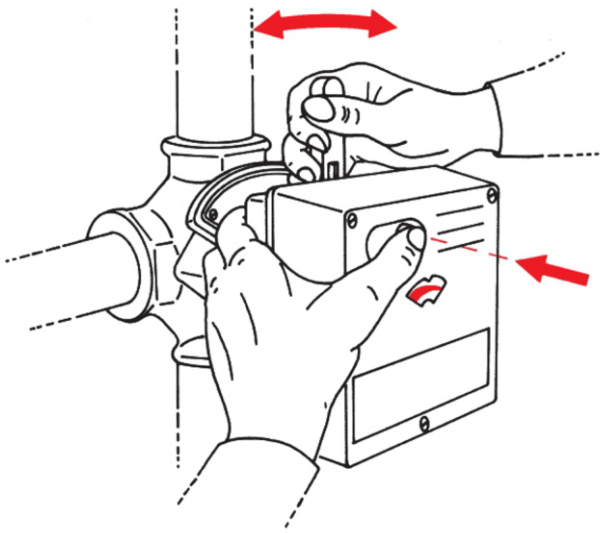
6 VMM/VMK