Digitized Automation for a Changing World

Delta Standard Compact Drive MS300 Series User Manual

www.deltaww.com

Copyright notice
©Delta Electronics, Inc. All rights reserved.
All information contained in this user manual is the exclusive property of Delta Electronics Inc. (hereinafter referred to as "Delta") and is protected by copyright law and all other laws. Delta retains the exclusive rights of this user manual in accordance with the copyright law and all other laws. No parts in this manual may be reproduced, transmitted, transcribed, translated or used in any other ways without the prior consent of Delta.

Limitation of Liability

The contents of this user manual are only for the use of the product manufactured by Delta. Except as defined in special mandatory laws, Delta provides this user manual “as is” and does not offer any kind of warranty through this user manual for using the product, either express or implied, including but not limited to the following: (i) this product will meet your needs or expectations; (ii) the information contained in the product is current and correct; (iii) the product does not infringe any rights of any other person. You shall bear your own risk to use this product.

In no event shall Delta, its subsidiaries, affiliates, managers, employees, agents, partners and licensors be liable for any direct, indirect, incidental, special, derivative or consequential damages (including but not limited to the damages for loss of profits, goodwill, use or other intangible losses) unless the laws contains special mandatory provisions to the contrary.

Delta reserves the right to make changes to the user manual and the products described in the user manual without prior notice and afterwards.

PLEASE READ PRIOR TO INSTALLATION FOR SAFETY.

DANGER

- ☑ Disconnect AC input power before connecting any wiring to the AC motor drive.
- ☑ Turn OFF the AC motor drive power before doing any wiring. A charge with hazardous voltages may remain in the DC bus capacitors even after the power has been turned off for a short time. Do not touch the internal circuits and components before the POWER LED (behind the digital keypad) is OFF. For your safety, measure the remaining voltage with a DC voltmeter on +1/DC+ and DC- and do not start wiring before the voltage drops to a safe level (less than 25_{VDC}). Installing wiring with a residual voltage may cause personal injury, sparks and short circuit.
- ☑ There are highly sensitive MOS components on the printed circuit boards. These components are especially sensitive to static electricity. Take anti-static measures before touching these components or the circuit boards. These components are especially sensitive to static electricity. Please do not touch these components or the circuit boards before taking anti-static measures.
- ☑ Never modify the internal components or wiring.
- ☑ Ground the AC motor drive by using the ground terminal. The grounding method must comply with the laws of the country where the AC motor drive is to be installed.
- ☑ DO NOT install the AC motor drive in a place subjected to high temperature, direct sunlight and inflammables.

CAUTION

- ☑ Never connect the AC motor drive output terminals U/T1, V/T2 and W/T3 directly to the AC mains circuit power supply.
- ☑ After finishing the wiring of the AC motor drive, check if R/L1, S/L2 and T/L3 are short-circuited to ground with a multimeter. Do NOT power the drive if short circuits occur. Eliminate the short circuits before the drive is powered.
- ☑ Rated voltage of power system to install motor drives is as below, make sure that the installation voltage is within the ranges mentioned below while installing the motor drives:
  For 115V models, the range is between 85–132 V.
  For 230V models, the range is between 170–264 V.
  For 460V models, the range is between 323–528 V.
  For 575V models, the range is between 425V–660V.
- ☑ Refer to the table below for short circuit rating:

Model (Power)	Short circuit rating
115V	5 kA
230V	5 kA
460V	5 kA
575V	5 kA

- ☑ Only qualified persons are allowed to install, wire and maintain the AC motor drives.
- ☑ Even if the three-phase AC motor is stopped, a charge with hazardous voltages may still remain in the main circuit terminals of the AC motor drive.
- ☑ The performance of electrolytic capacitor will degrade if it is not charged for a long time. It is recommended to charge the drive which is stored in no charge condition

	every 2 years for 3–4 hours to restore the performance of electrolytic capacitor in the motor drive. Note: When power up the motor drive, use adjustable AC power source (ex. AC autotransformer) to charge the drive at 70%–80% of rated voltage for 30 minutes (do not run the motor drive). Then charge the drive at 100% of rated voltage for an hour (do not run the motor drive). By doing these, restore the performance of electrolytic capacitor before starting to run the motor drive. Do NOT run the motor drive at 100% rated voltage right away. ☑ Pay attention to the following when transporting and installing this package (including wooden crate and wood stave). 1 If you need to deworm the wooden crate, do not use fumigation or you will damage the drive. Any damage to the drive caused by using fumigation voids the warranty. 2 Use other methods, such as heat treatment or any other non-fumigation treatment, to deworm the wood packaging material. 3 If you use heat treatment to deworm, leave the packaging materials in an environment of over 56°C for a minimum of thirty minutes. ☑ Connect the drive to a three-phase three-wire or three-phase four-wire Wye system to comply with UL standards. ☑ If the motor drive produces a leakage current of over 3.5mA AC or over 10mA DC on the Protective Earthing conductor, the minimum specifications required of the Protective Earthing conductor to be installed have to comply with the national, local laws and regulations or follow IEC 61800-5-1 to do grounding.

NOTE:

- In the pictures in this manual, the cover or safety shield is disassembled only when explaining the details of the product. During operation, install the top cover and wiring correctly according to the provisions. Refer to the operation descriptions in the manual to ensure safety.
- The figures in this instruction are only for reference and may be slightly different depending on your model, but it will not affect your customer rights.
- The content of this manual may be revised without prior notice. Consult our distributors or download the latest version at http://www.deltaww.com/iadownload_acmotordrive.

Table of Contents

Chapter 1 Introduction **1**
1-1 Nameplate Information 2
1-2 Model Name 3
1-3 Serial Number 4
1-4 Apply After-sales Service by Mobile Device 5
1-5 RFI Jumper 6
Chapter 2 Dimensions **9**
2-1 Frame A 10
2-2 Frame B 12
2-3 Frame C 14
2-4 Frame D 16
2-5 Frame E 17
2-6 Frame F 18
2-7 Digital Keypad 19
Chapter 3 Installation **21**
3-1 Mounting Clearance 22
3-2 Airflow and Power Dissipation 24
Chapter 4 Wiring **27**
4-1 System Wiring Diagram 29
4-2 Wiring 30
Chapter 5 Main Circuit Terminals **31**
5-1 Main Circuit Diagram 36
5-2 Main Circuit Terminal Specifications 37
Chapter 6 Control Terminals **45**
6-1 Control Terminal Specifications 48
Chapter 7 Optional Accessories **53**
7-1 Brake Resistors and Brake Units Used in AC Motor Drives 54
7-2 Magnetic Contactor / Air Circuit Breaker and Non-fuse Circuit Breaker 58
7-3 Fuse Specification Chart 62
7-4 AC / DC Reactor 64
7-5 Zero Phase Reactors 87
7-6 EMC Filter 90
7-7 EMC Shield Plate 96
7-8 Capacitive Filter 99
7-9 NEMA 1 / UL Type 1 Kit 101
7-10 Fan Kit 109
7-11 Keypad Panel Mounting 110
7-12 DIN-Rail Mounting 112
7-13 Mounting Adapter Plate 114
7-14 Digital Keypad - KPC-CC01 118

Chapter 8 Option Cards **155**
8-1 Option Card Installation 156
8-2 CMM-PD02 -- Communication card, Profibus DP 163
8-3 CMM-DN02 -- Communication card, DeviceNet 165
8-4 CMM-EIP02 -- Communication Extension Card, (Single-port) EtherNet/IP, Modbus TCP 168
8-5 CMM-EIP03 -- (Dual-port) EtherNet/IP, Modbus TCP 172
8-6 CMM-COP02 -- Communication Extension Card, CANopen 176
8-7 CMM-EC02 – Communication Extension Card, EtherCAT 178
8-8 EMM-BPS02 -- +24V Power Extension Card 181
8-9 CMM-PN02 -- Communication Card, PROFINET 183
8-10 Delta Standard Fieldbus Cables 186
Chapter 9 Specifications **187**
9-1 115V Models 188
9-2 230V Models 189
9-3 460V Models 193
9-4 575V Models 197
9-5 General Specifications 198
9-6 Environment for Operation, Storage and Transportation 199
9-7 Derating for Ambient Temperature, Altitude and Carrier Frequency 200
Chapter 10 Digital Keypad **205**
10-1 KPMS-LE01 Keyboard Panel 206
10-2 Keypad Operation Process 207
10-3 Reference Table for the Seven-segment Digital Keypad LED Display 214
Chapter 11 Summary of Parameter Settings **215**
00 Drive Parameters 216
01 Basic Parameters 224
02 Digital Input / Output Parameters 228
03 Analog Input / Output Parameters 234
04 Multi-step Speed Parameters 238
05 Motor Parameters 239
06 Protection Parameters (1) 243
07 Special Parameters 250
08 High-function PID Parameters 253
09 Communication Parameters 256
10 Speed Feedback Control Parameters 261
11 Advanced Parameters 263
13 Industry Application Parameters 265
14 Protection Parameters (2) 266
Chapter 12 Descriptions of Parameter Settings **269**
12-1 Descriptions of Parameter Settings 270
00 Drive Parameters 270
01 Basic Parameters 291

02 Digital Input / Output Parameters 305
03 Analog Input / Output Parameters 331
04 Multi-Step Speed Parameters 353
05 Motor Parameters 355
06 Protection Parameters (1) 365
07 Special Parameters 391
08 High-function PID Parameters 405
09 Communication Parameters 423
10 Speed Feedback Control Parameters 431
11 Advanced Parameters 439
13 Industry Application Parameters 447
14 Protection Parameters (2) 457
12-2 Adjustment & Application 463
Chapter 13 Warning Codes 477
Chapter 14 Fault Codes 551
Chapter 15 CANopen Overview 637
15-1 CANopen Overview 639
15-2 Wiring for CANopen 643
15-3 CANopen Communication Interface Descriptions 644
15-4 CANopen Supported Index 652
15-5 CANopen Fault Codes 658
15-6 CANopen LED Function 661
Chapter 16 PLC Function Applications 663
16-1 PLC Summary 664
16-2 Notes before Using a PLC 665
16-3 Turn on 667
16-4 Basic Principles of PLC Ladder Diagrams 678
16-5 Various PLC Device Functions 690
16-6 Introduction to the Command Window 699
16-7 Error Display and Handling 768
16-8 Explanation of PLC Speed Mode Control 769
16-9 Count Function Using Pulse Input 771
Chapter 17 Safe Torque Off Function 773
17-1 Basic Function Description 774
17-2 Safe Torque Off Terminal Function Description 775
17-3 Wiring Diagram 776
17-4 Failure Rate of the Drive Safety Function 777
17-5 Reset the Parameter Settings 778
17-6 Timing Diagram Description 779
17-7 Error Code and Troubleshooting Instructions 782
17-8 Test and Fault Confirmation 784

Appendix A. Modbus Protocol **787**
A-1 Code Description 788
A-2 Data Format 788
A-3 Communication Protocol 789
A-4 Address List 794
A-5 Exception Response 800
Appendix B. Revision History **801**

Issued Edition: 05
Firmware Version: V2.02 (Refer to Pr.00-06 on the product for the firmware version.)
Issued Date: 2024/04

[This page intentionally left blank]

Chapter 1 Introduction

1-1 Nameplate Information

1-2 Model Name

1-3 Serial Number

1-4 Apply After Service by Mobile Device

1-5 RFI Jumper

After receiving the AC motor drive, check for the following:

1. Inspect the unit after unpacking to ensure that it was not damaged during shipment. Make sure that the part number printed on the package matches the part number indicated on the nameplate.
2. Make sure that the mains voltage is within the range indicated on the nameplate. Install the AC motor drive according to the instructions in this manual.
3. Before applying power, make sure that all devices, including mains power, motor, control board and digital keypad, are connected correctly.
4. When wiring the AC motor drive, make sure that the wiring of input terminals “R/L1, S/L2, T/L3” and output terminals “U/T1, V/T2, W/T3” are correct to prevent damage to the drive.
5. When power is applied, use the digital keypad (KPMS-LE01) to select the language and set parameters. When executing a trial run, begin with a low speed and then gradually increase the speed to the desired speed.

1-1 Nameplate Information

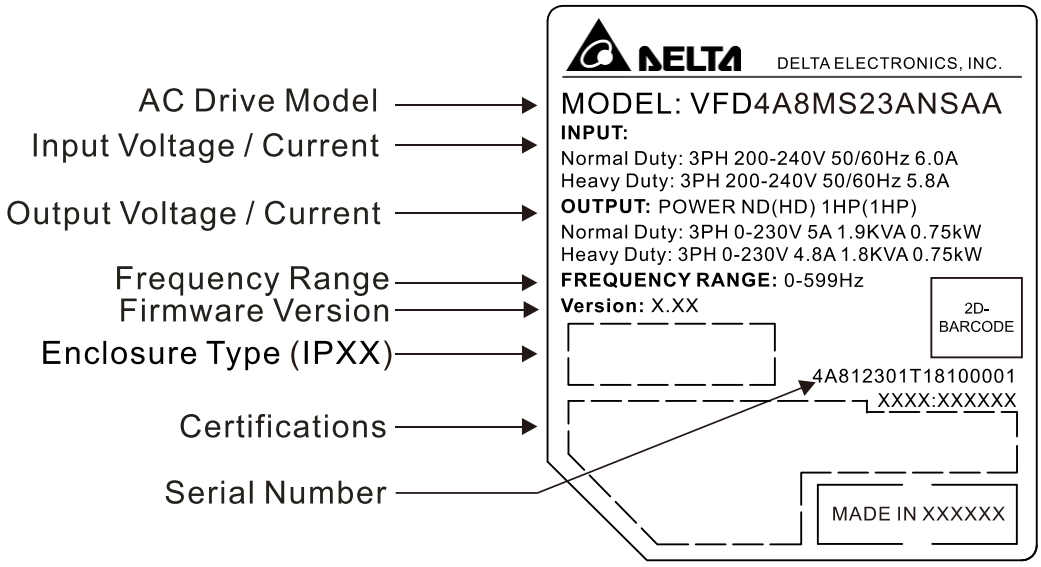

Figure 1-1

1-2 Model Name

	[1]	[2]	[3]	[4]	[5]	[6]	[7]	[8]	[9]
Example	VFD	4A8	MS	23	A	N	S	A	A

Definition		Description
[1]	Product Name	VFD = Variable Frequency Device (AC Motor Drive)
[2]	Rated Output Current	Under Normal duty mode: 150% 60 seconds. **NOTE:** Refer to the Specifications in the user manual for more information.
[3]	Series	MS = MS300 (Standard Micro Drive)
[4]	Input Voltage	11 = 115V 1-phase 21 = 230V 1-phase 23 = 230V 3-phase 43 = 460V 3-phase 53 = 575V 3-phase *1
[5]	Protection Level	A = IP20 E = IP40 *2 M = IP66 *3 P = IP20 Plate *4
[6]	EMC Filter	N = No function F = Built-in EMC filter *5
[7]	Safety Function	S = Built-in STO
[8]	Model Type	A = Standard
[9]	Version Type	N/A

Table 1-1

*1. For IP20 models only.

*2. Not applicable for models of 575V input voltage.

*3. Not applicable for models of 115V and 575V input voltage.

*4. For 460V input voltage (three-phase) models only.

*5. For 230V input voltage (one-phase) and 460V input voltage (three-phase) models only.

1-3 Serial Number

	[1]	[2]	[3]	[4]	[5]	[6]
Example	4A81	2301	T	23	01	0001

Definition		Description
[1]	Series	1 = MS300
[2]	Model Name	230V 3-phase 1HP (0.75kW)
[3]	Production Factory	T = Taoyuan W = Wujiang H = Hosur
[4]	Production Year	2023
[5]	Production Week	01
[6]	Production Number	0001

Table 1-2

1-4 Apply After-sales Service by Mobile Device

1-4-1 Location of Service Link Label

Service link label (Service Label) is pasted on the area as the drawing below shows.

Frame A, B

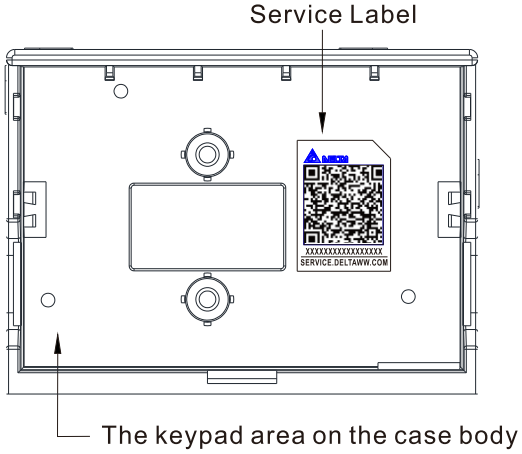

Figure 1-2

Frame C–F

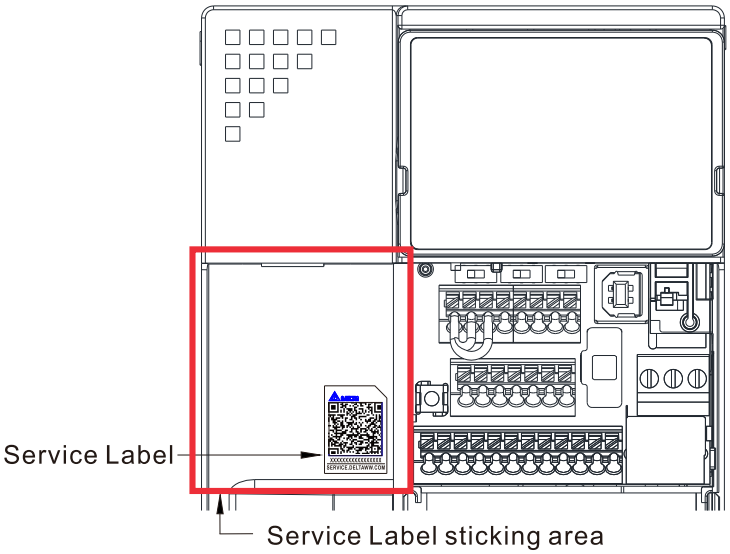

Figure 1-3

1-4-2 Service Link Label

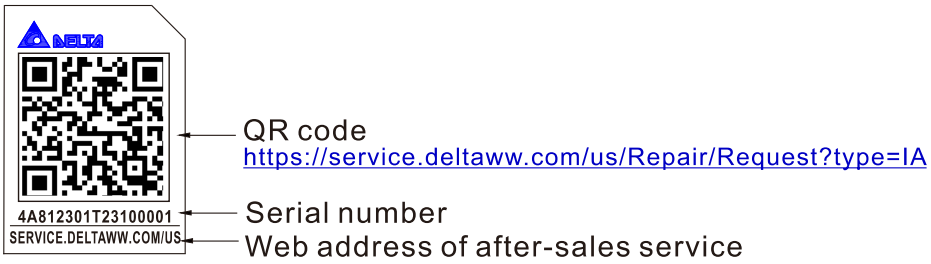

Figure 1-4

Scan QR Code to request service

1. Find the QR code sticker (as shown above).
2. Use a smartphone to run a QR Code reader APP.
3. Point your camera at the QR Code. Hold your camera steady until the QR code comes into focus.
4. Access the Delta After-sales Service website.
5. Fill your information into the column marked with an orange star.
6. Enter the CAPTCHA and click “Submit” to complete the application.

Cannot find the QR Code?

1. Open a web browser on your computer or smartphone.
2. Enter https://service.deltaww.com/us/Repair/Request?type=IA in browser address bar and press the Enter key.
3. Fill your information into the columns marked with an orange star.
4. Enter the CAPTCHA and click “Submit” to complete the application.

1-5 RFI Jumper

1. The drive contains Varistors / MOVs that are connected from phase to phase and from phase to ground to prevent the drive from unexpected stop or damage caused by mains surges or voltage spikes. Because the Varistors / MOVs from phase to ground are connected to ground with the RFI jumper, removing the RFI jumper disables the protection.
2. In models with a built-in EMC filter, the RFI jumper connects the filer capacitors to ground to form a return path for high frequency noise in order to isolate the noise from contaminating the mains power. Removing the RFI jumper strongly reduces the effect of the built-in EMC filter. Although a single drive complies with the international standards for leakage current, an installation with several drives with built-in EMC filters can trigger the RCD. Removing the RFI jumper helps, but the EMC performance of each drive is no longer guaranteed.

Models without built-in EMC filter

Frame A–F

Screw Torque: 4–6 kg-cm / (3.5–5.2 lb-in.) / (0.39–0.59 Nm)

Loosen the screw and remove the RFI jumper (as shown below).

Tighten the screw again after you remove the RFI jumper.

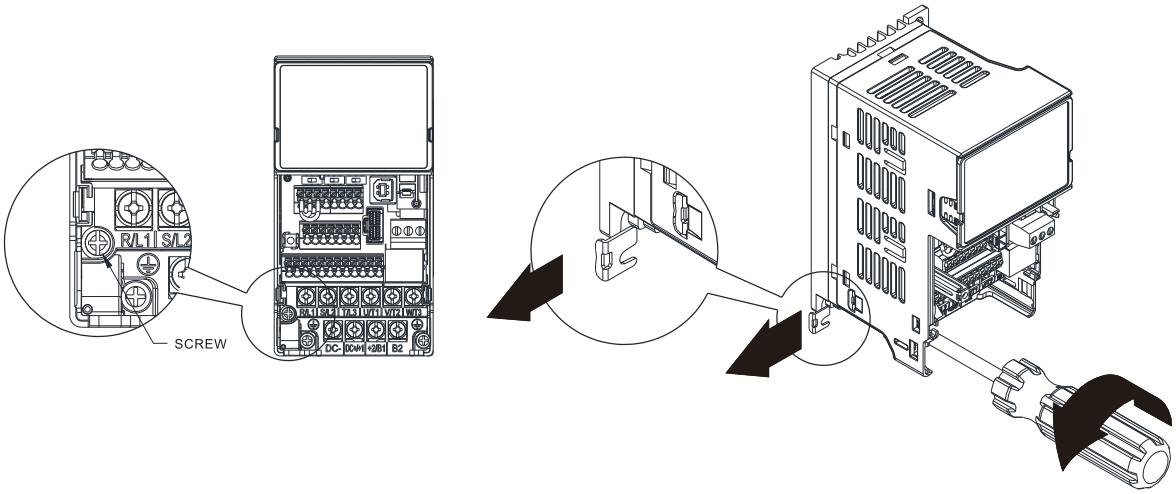

Figure 1-5

Models with built-in EMC filter

Frame B–F

Remove the RFI jumper with a slotted screwdriver (as shown below).

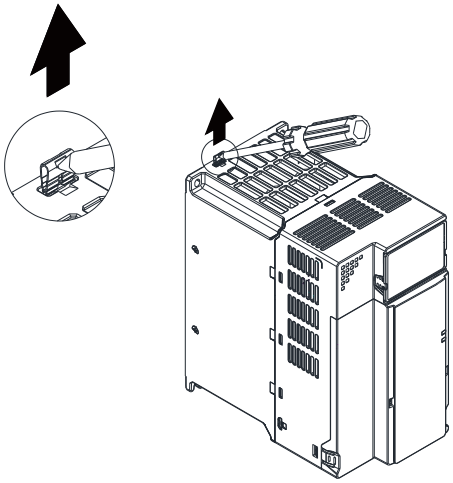

Figure 1-6

Isolating main power from ground:

When the power distribution system for the drive is a floating ground system (IT Systems) or an asymmetric ground system (Corner Grounded TN Systems), you must remove the RFI jumper. Voltage of any phase to the ground for either system may be larger than the voltage specifications of the drive's built-in surge absorber and common-mode capacitance. In this case, connecting RFI jumper to the ground may cause damage to the drive.

Important points regarding ground connection:

- ☑ To ensure the safety of personnel, proper operation, and to reduce electromagnetic radiation, you must properly ground the motor and drive during installation.
- ☑ The diameter of the grounding cables must comply with the local safety regulations.
- ☑ You must connect the shielded cable to the motor drive's ground to meet safety regulations.
- ☑ Only use the shielded cable as the ground for equipment when the aforementioned points are met.
- ☑ When installing multiple drives, do not connect the grounds of the drives in single-point serial grounding but a single-point parallel grounding. The following pictures show the correct and wrong ways to connect the grounds.

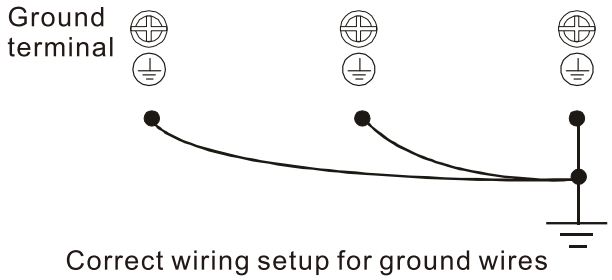

Figure 1-7

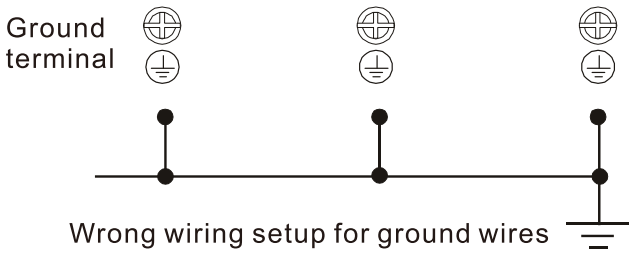

Figure 1-8

Pay particular attention to the following points:

- ☑ Do not remove the RFI jumper while the power is on.
- ☑ Removing the RFI jumper also cuts the capacitor conductivity of the surge absorber to ground and the built-in EMC filter capacitors. Compliance with the EMC specifications is no longer guaranteed.
- ☑ Do not remove the RFI jumper if the mains power is a symmetrical grounded power system in order to maintain the efficiency for EMC circuit.
- ☑ Remove the RFI jumper when conducting high voltage tests. When conducting a high voltage test to the entire facility, disconnect the mains power and the motor if the leakage current is too high.

Floating Ground System (IT Systems)

A floating ground system is also called an IT system, an ungrounded system, or a high impedance / resistance (greater than 30 Ω) grounded system.

- ☑ Remove the RFI jumper to disconnect the ground cable from the internal filter capacitor and surge absorber.
- ☑ Do not install an external RFI / EMC filter. The external EMC filter passes through a filter capacitor and connects power input to the ground. This is very dangerous and damages the motor drive.
- ☑ In situations where EMC is required, use an EMC filter specifically for IT system if necessary. Disconnecting the ground cable from the filter prevents damage to the motor drive but compliance with EMC is no longer guaranteed.

☑ In situations where EMC is required, check for excess electromagnetic radiation affecting nearby low-voltage circuits. In some situations, the adapter and cable naturally provide enough suppression. If in doubt, install an extra electrostatic shielded cable on the power supply side between the main circuit and the control terminals to increase shielding.

Asymmetric Ground System (Corner Grounded TN Systems)

Caution: Do not remove the RFI jumper while power to the input terminal of the drive is ON.

In the following four situations, you must remove the RFI jumper. This is to prevent the system from grounding through the RFI and filter capacitors and damaging the drive.

<table>
<tr><th colspan="2">You must remove the RFI jumper for an asymmetric ground system</th></tr>
<tr><td>1. Grounding at a corner in a triangle configuration
 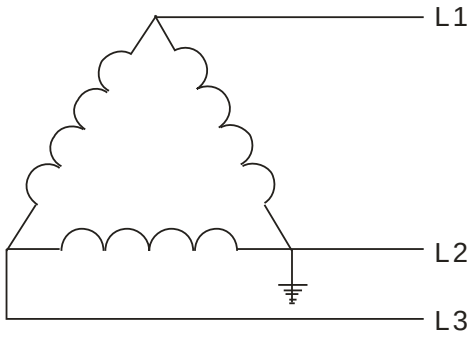

Figure 1-9</td><td>2. Grounding at a midpoint in a polygonal configuration
 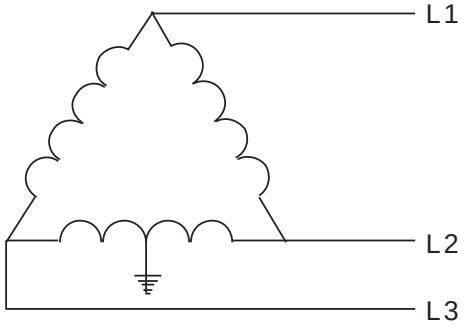

Figure 1-10</td></tr>
<tr><td>3. Grounding at one end in a single-phase configuration
 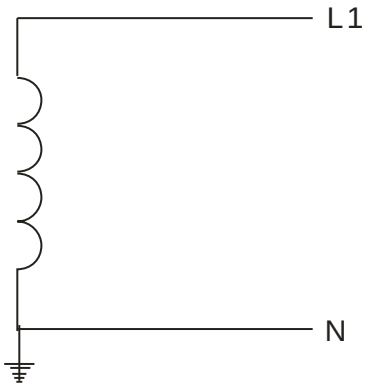

Figure 1-11</td><td>4. No stable neutral grounding in a three-phase autotransformer configuration
 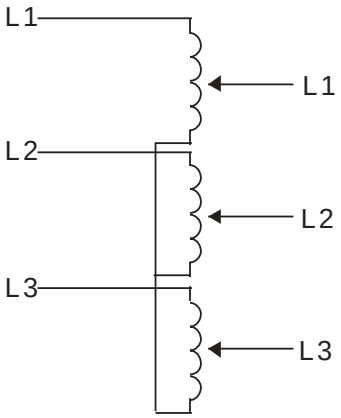

Figure 1-12</td></tr>
<tr><th colspan="2">You can use the RFI jumper for a symmetrical grounding power system</th></tr>
<tr><td>In a situation with a symmetrical grounding power system, you can use the RFI jumper to maintain the effect of the built-in EMC filter and surge absorber. For example, the diagram on the right is a symmetrical grounding power system.</td><td> 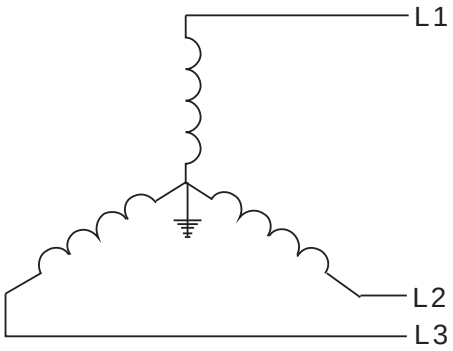

Figure 1-13</td></tr>
</table>

Chapter 2 Dimensions

2-1 Frame A

2-2 Frame B

2-3 Frame C

2-4 Frame D

2-5 Frame E

2-6 Frame F

2-7 Digital Keypad

2-1 Frame A

A1: VFD1A6MS11ANSAA; VFD1A6MS11ENSAA; VFD1A6MS21ANSAA; VFD1A6MS21ENSAA; VFD1A6MS23ANSAA; VFD1A6MS23ENSAA

A2: VFD2A8MS23ANSAA; VFD2A8MS23ENSAA

A3: VFD2A5MS11ANSAA; VFD2A5MS11ENSAA; VFD2A8MS21ANSAA; VFD2A8MS21ENSAA

A4: VFD1A5MS43ANSAA; VFD1A5MS43ENSAA

A5: VFD4A8MS23ANSAA; VFD4A8MS23ENSAA; VFD2A7MS43ANSAA; VFD2A7MS43ENSAA; VFD1A7MS53ANSAA

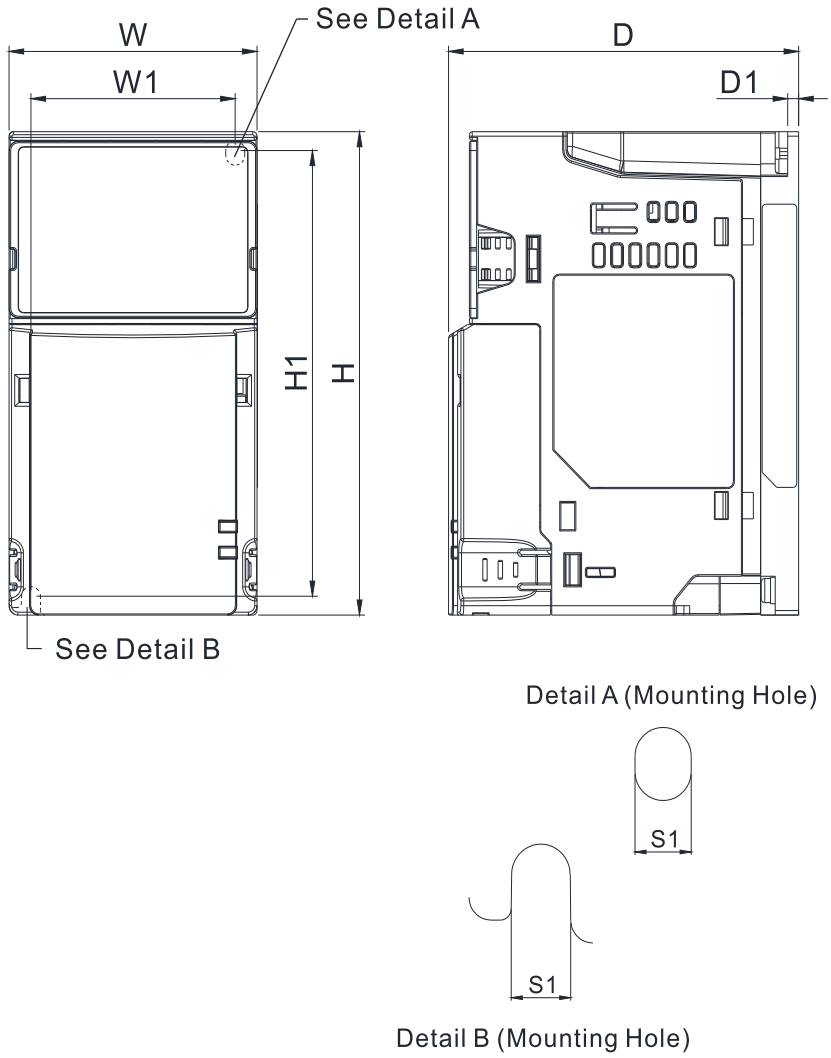

Figure 2-1

Unit: mm (inch)

Frame	W	H	D	W1	H1	D1	S1
A1	68.0 (2.68)	128.0 (5.04)	96.0 (3.78)	56.0 (2.20)	118.0 (4.65)	3.0 (0.12)	5.2 (0.20)
A2	68.0 (2.68)	128.0 (5.04)	110.0 (4.33)	56.0 (2.20)	118.0 (4.65)	3.0 (0.12)	5.2 (0.20)
A3	68.0 (2.68)	128.0 (5.04)	125.0 (4.92)	56.0 (2.20)	118.0 (4.65)	3.0 (0.12)	5.2 (0.20)
A4	68.0 (2.68)	128.0 (5.04)	129.0 (5.08)	56.0 (2.20)	118.0 (4.65)	3.0 (0.12)	5.2 (0.20)
A5	68.0 (2.68)	128.0 (5.04)	143.0 (5.63)	56.0 (2.20)	118.0 (4.65)	3.0 (0.12)	5.2 (0.20)

Table 2-1

A6: VFD2A7MS43PNSAA

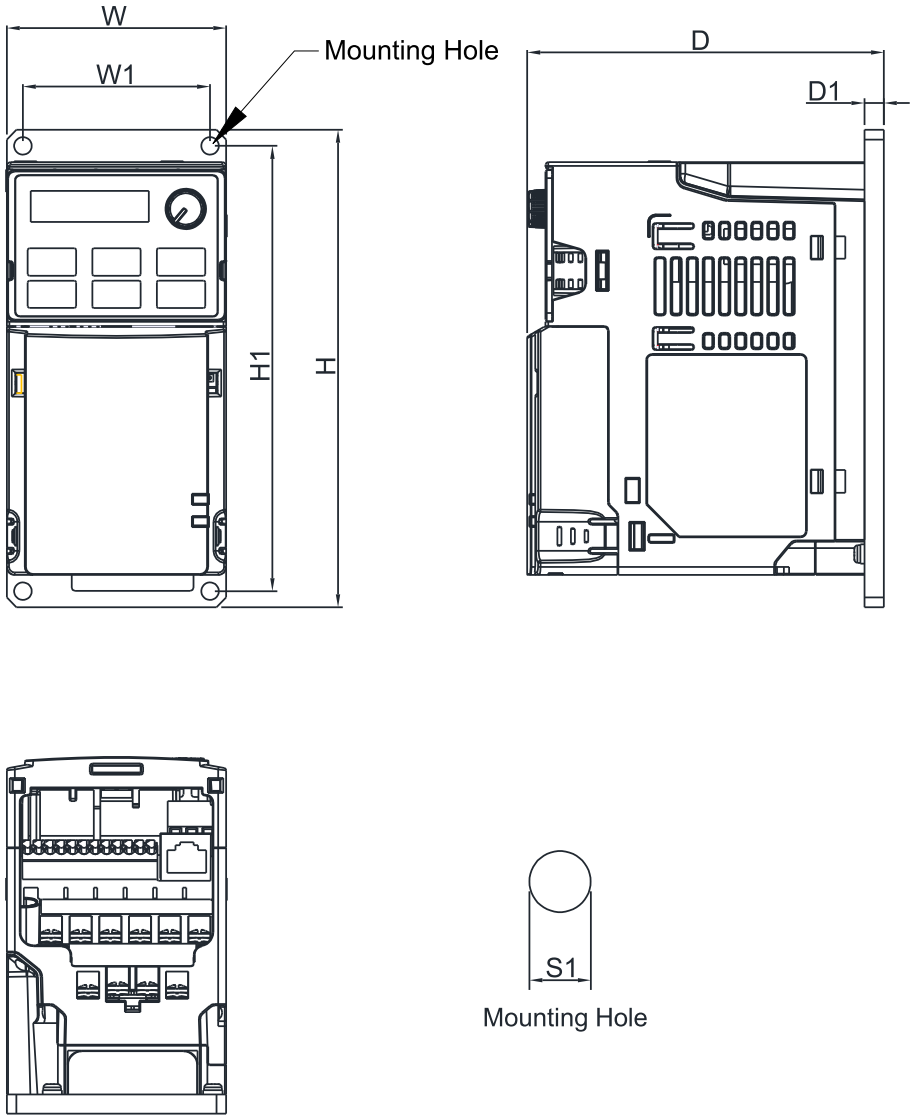

Figure 2-2

Unit: mm (inch)

Frame	W	H	D	W1	H1	D1	S1
A6	68.0 (2.68)	148.0 (5.83)	110.6 (4.35)	58.0 (2.28)	138.0 (5.43)	6.0 (0.24)	5.5 (0.22)

Table 2-2

2-2 Frame B

B1: VFD7A5MS23ANSAA; VFD7A5MS23ENSAA; VFD4A2MS43ANSAA; VFD4A2MS43ENSAA; VFD3A0MS53ANSAA

B2: VFD4A8MS21ANSAA; VFD4A8MS21ENSAA

B3: VFD1A6MS21AFSAA; VFD2A8MS21AFSAA; VFD4A8MS21AFSAA; VFD1A5MS43AFSAA; VFD2A7MS43AFSAA; VFD4A2MS43AFSAA

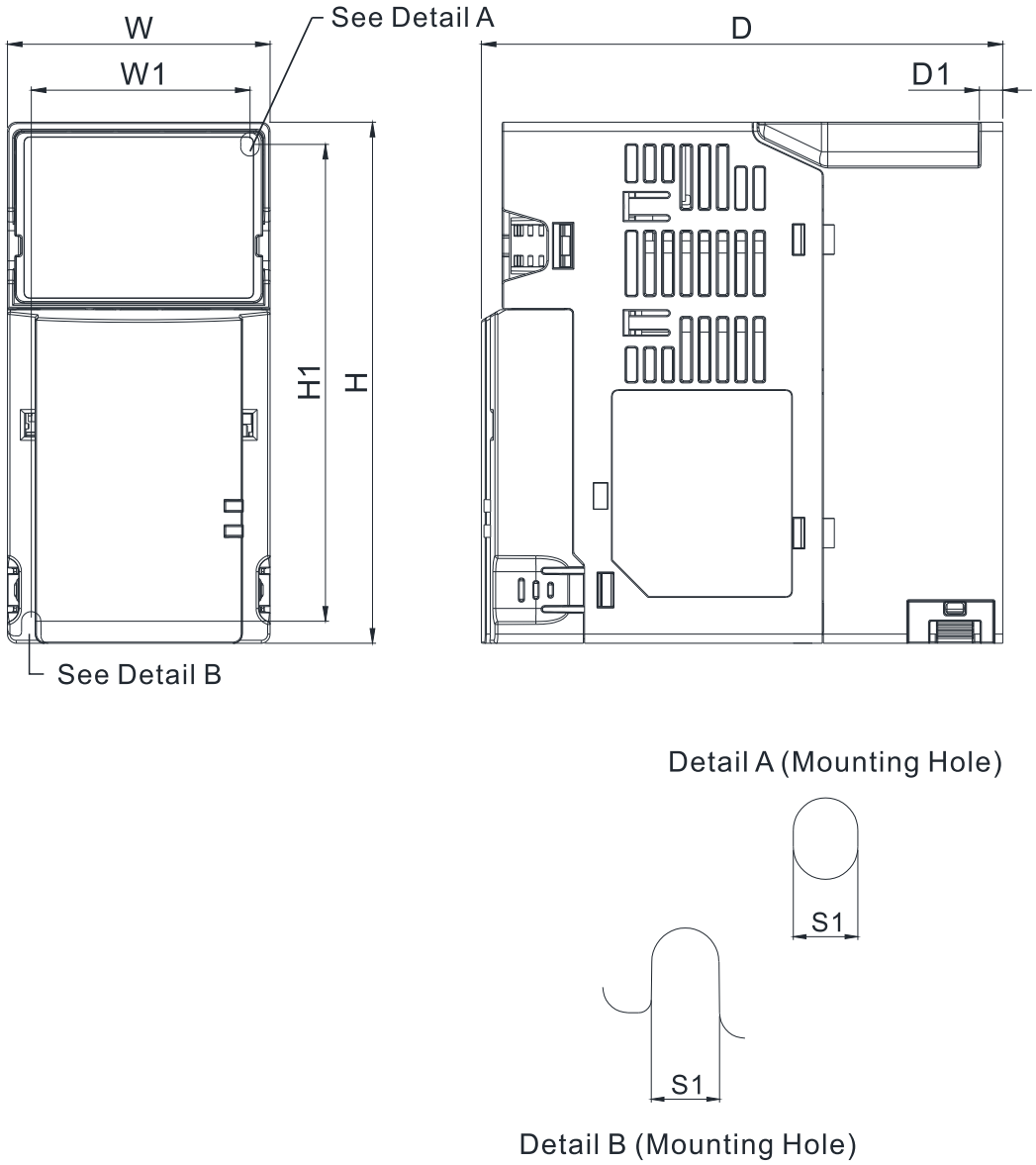

Figure 2-3

Unit: mm (inch)

Frame	W	H	D	W1	H1	D1	S1
B1	72.0 (2.83)	142.0 (5.59)	143.0 (5.63)	60.0 (2.36)	130.0 (5.63)	6.4 (0.25)	5.2 (0.20)
B2	72.0 (2.83)	142.0 (5.59)	143.0 (5.63)	60.0 (2.36)	130.0 (5.63)	3.0 (0.12)	5.2 (0.20)
B3	72.0 (2.83)	142.0 (5.59)	159.0 (6.26)	60.0 (2.36)	130.0 (5.63)	4.3 (0.17)	5.2 (0.20)

Table 2-3

B4: VFD4A2MS43PNSAA

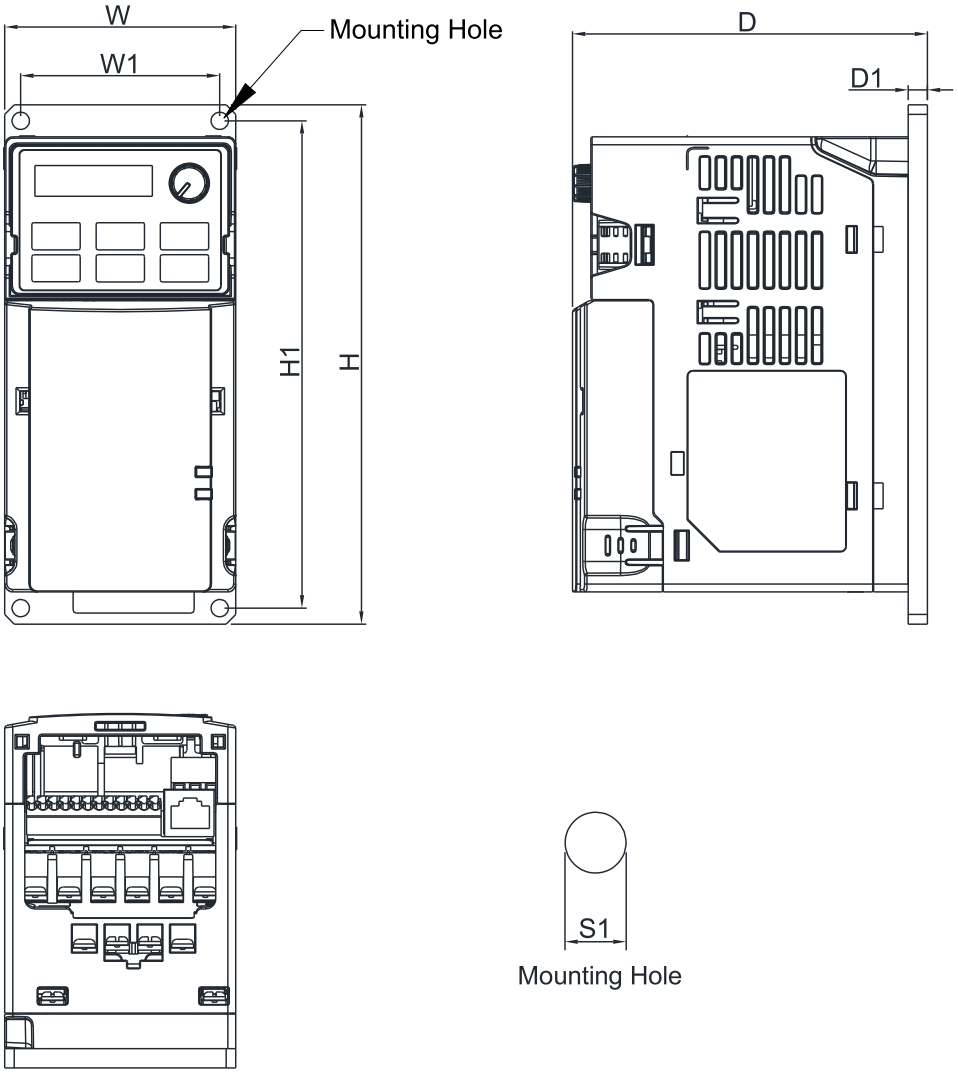

Figure 2-4

Unit: mm (inch)

Frame	W	H	D	W1	H1	D1	S1
B4	72.0 (2.83)	162.0 (6.38)	110.6 (4.35)	62.0 (2.44)	152.0 (5.98)	6.0 (0.24)	5.5 (0.22)

Table 2-4

2-3 Frame C

C1: VFD4A8MS11ANSAA; VFD4A8MS11ENSAA; VFD7A5MS21ANSAA; VFD7A5MS21ENSAA; VFD11AMS21ANSAA; VFD11AMS21ENSAA; VFD11AMS23ANSAA; VFD11AMS23ENSAA; VFD17AMS23ANSAA; VFD17AMS23ENSAA; VFD5A5MS43ANSAA; VFD5A5MS43ENSAA; VFD7A3MS43ANSAA; VFD7A3MS43ENSAA; VFD9A0MS43ANSAA; VFD9A0MS43ENSAA; VFD4A2MS53ANSAA; VFD6A6MS53ANSAA

C2: VFD7A5MS21AFSAA; VFD11AMS21AFSAA; VFD5A5MS43AFSAA; VFD7A3MS43AFSAA; VFD9A0MS43AFSAA

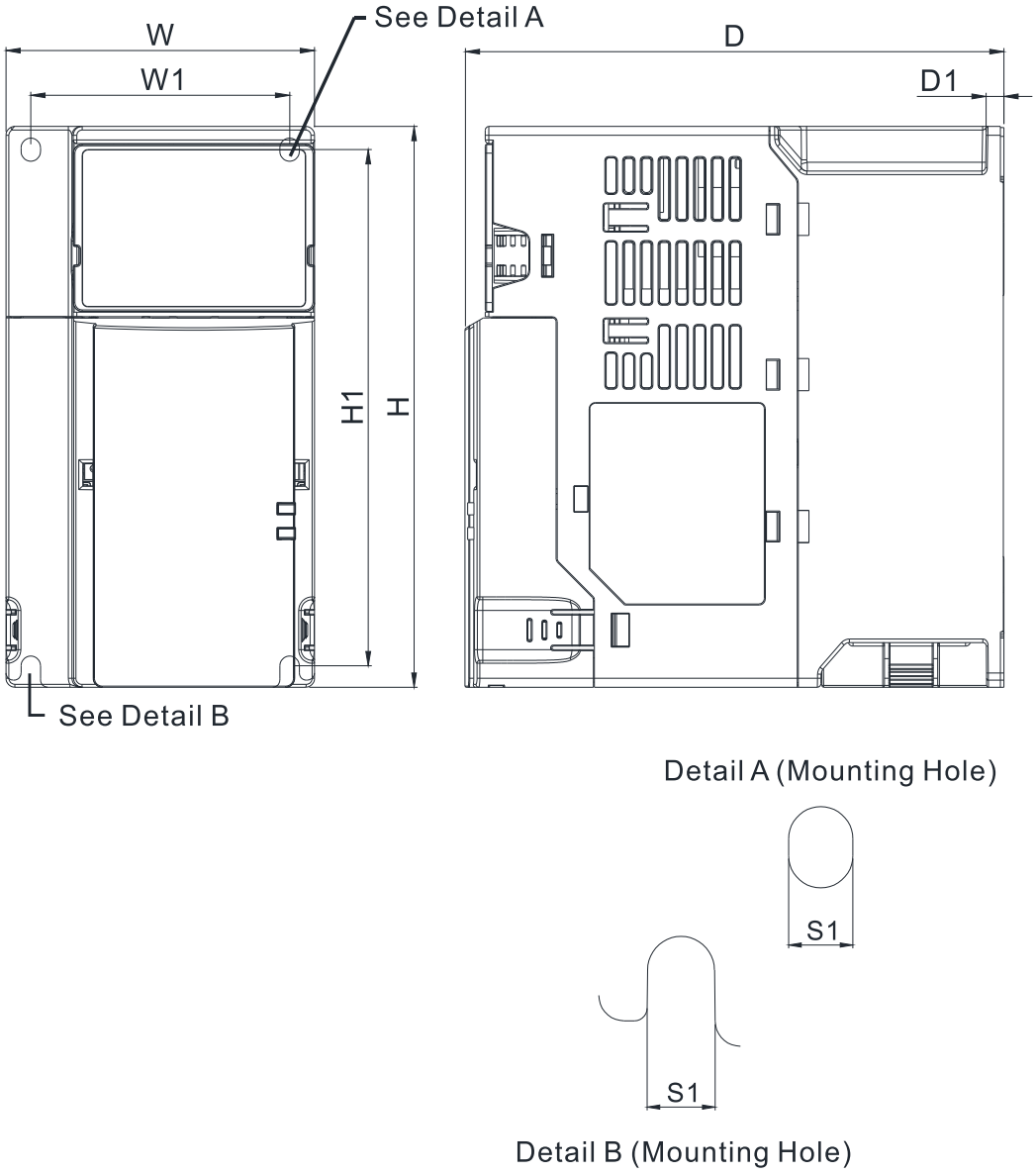

Figure 2-5

Unit: mm (inch)

Frame	W	H	D	W1	H1	D1	S1
C1	87.0 (3.43)	157.0 (6.18)	152.0 (5.98)	73.0 (2.87)	144.5 (5.69)	5.0 (0.20)	5.5 (0.22)
C2	87.0 (3.43)	157.0 (6.18)	179.0 (7.05)	73.0 (2.87)	144.5 (5.69)	5.0 (0.20)	5.5 (0.22)

Table 2-5

C3: VFD5A5MS43PNSAA; VFD7A3MS43PNSAA; VFD9A0MS43PNSAA

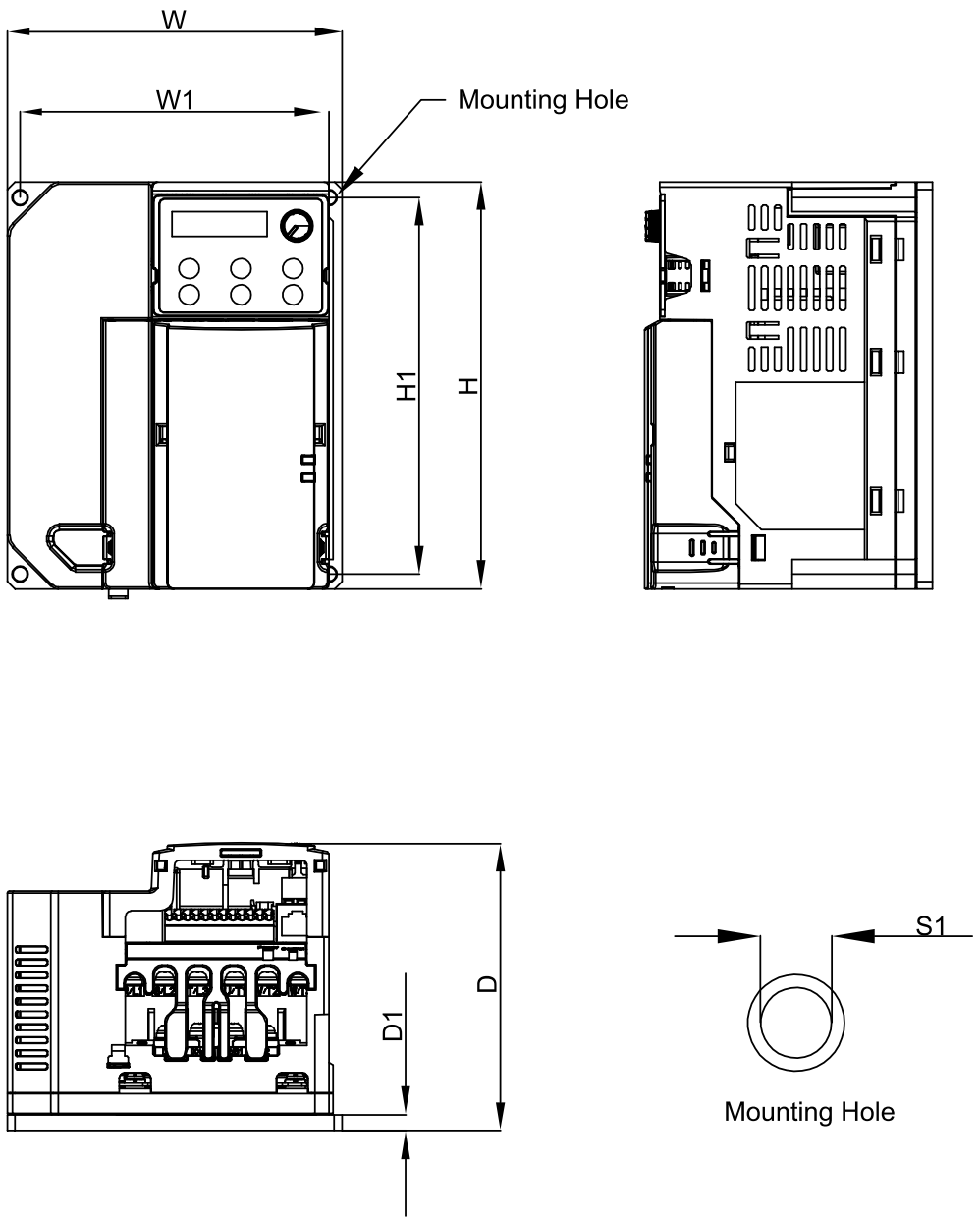

Figure 2-6

Unit: mm (inch)

Frame	W	H	D	W1	H1	D1	S1
C3	129.0 (5.08)	157.0 (6.18)	110.8 (4.36)	119.0 (4.69)	145.0 (5.71)	6.0 (0.24)	5.5 (0.22)

Table 2-6

2-4 Frame D

D1: VFD25AMS23ANSAA; VFD25AMS23ENSAA; VFD13AMS43ANSAA; VFD13AMS43ENSAA; VFD17AMS43ANSAA; VFD17AMS43ENSAA; VFD9A9MS53ANSAA; VFD12AMS53ANSAA

D2: VFD13AMS43AFSAA; VFD17AMS43AFSAA

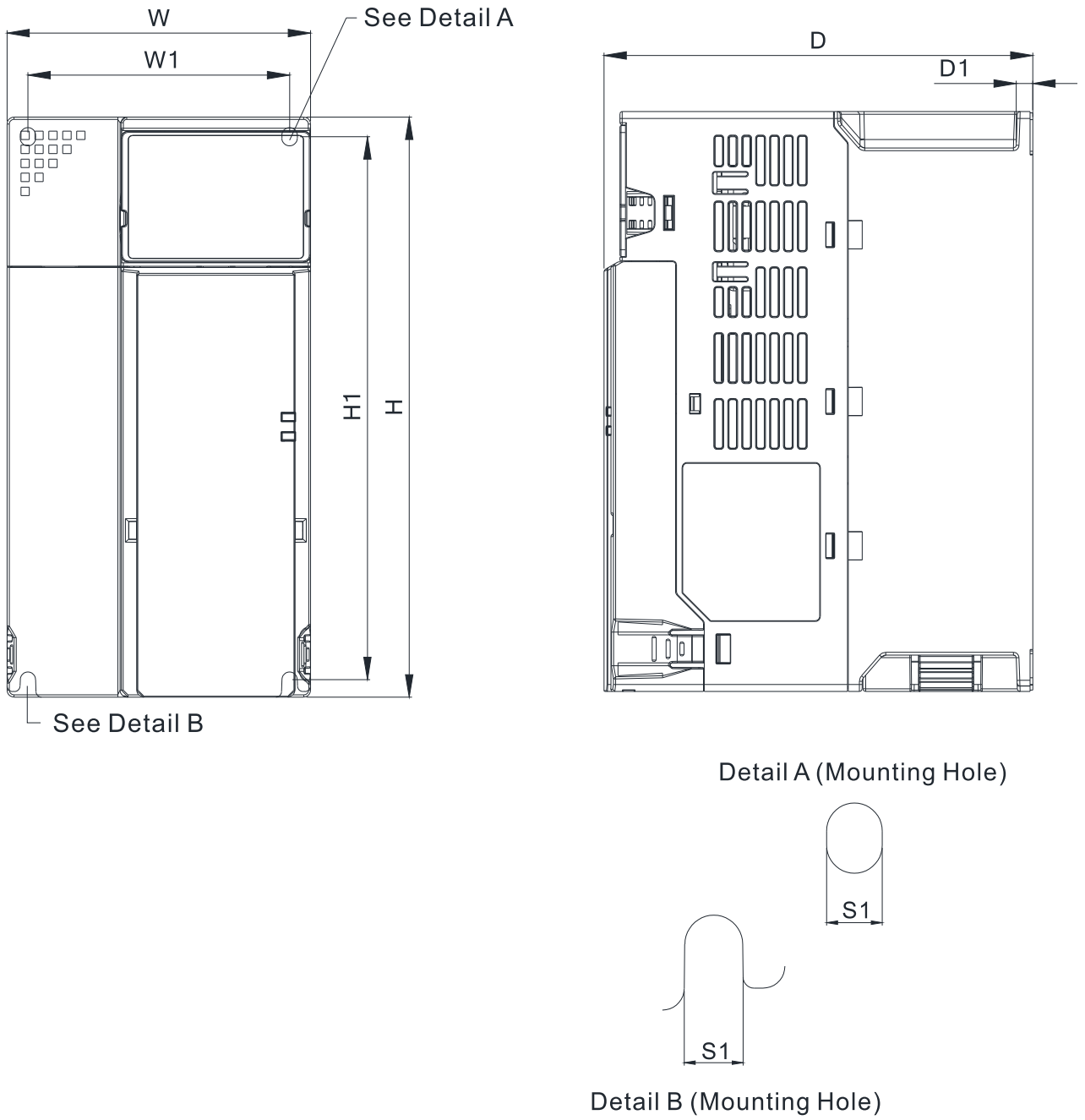

Figure 2-7

Unit: mm (inch)

Frame	W	H	D	W1	H1	D1	S1
D1	109.0 (4.29)	207.0 (8.15)	154.0 (6.06)	94.0 (3.70)	193.8 (7.63)	6.0 (0.24)	5.5 (0.22)
D2	109.0 (4.29)	207.0 (8.15)	187.0 (7.36)	94.0 (3.70)	193.8 (7.63)	6.0 (0.24)	5.5 (0.22)

Table 2-7

2-5 Frame E

E1: VFD33AMS23ANSAA; VFD33AMS23ENSAA; VFD49AMS23ANSAA; VFD49AMS23ENSAA; VFD25AMS43ANSAA; VFD25AMS43ENSAA; VFD32AMS43ANSAA; VFD32AMS43ENSAA

E2: VFD25AMS43AFSAA; VFD32AMS43AFSAA

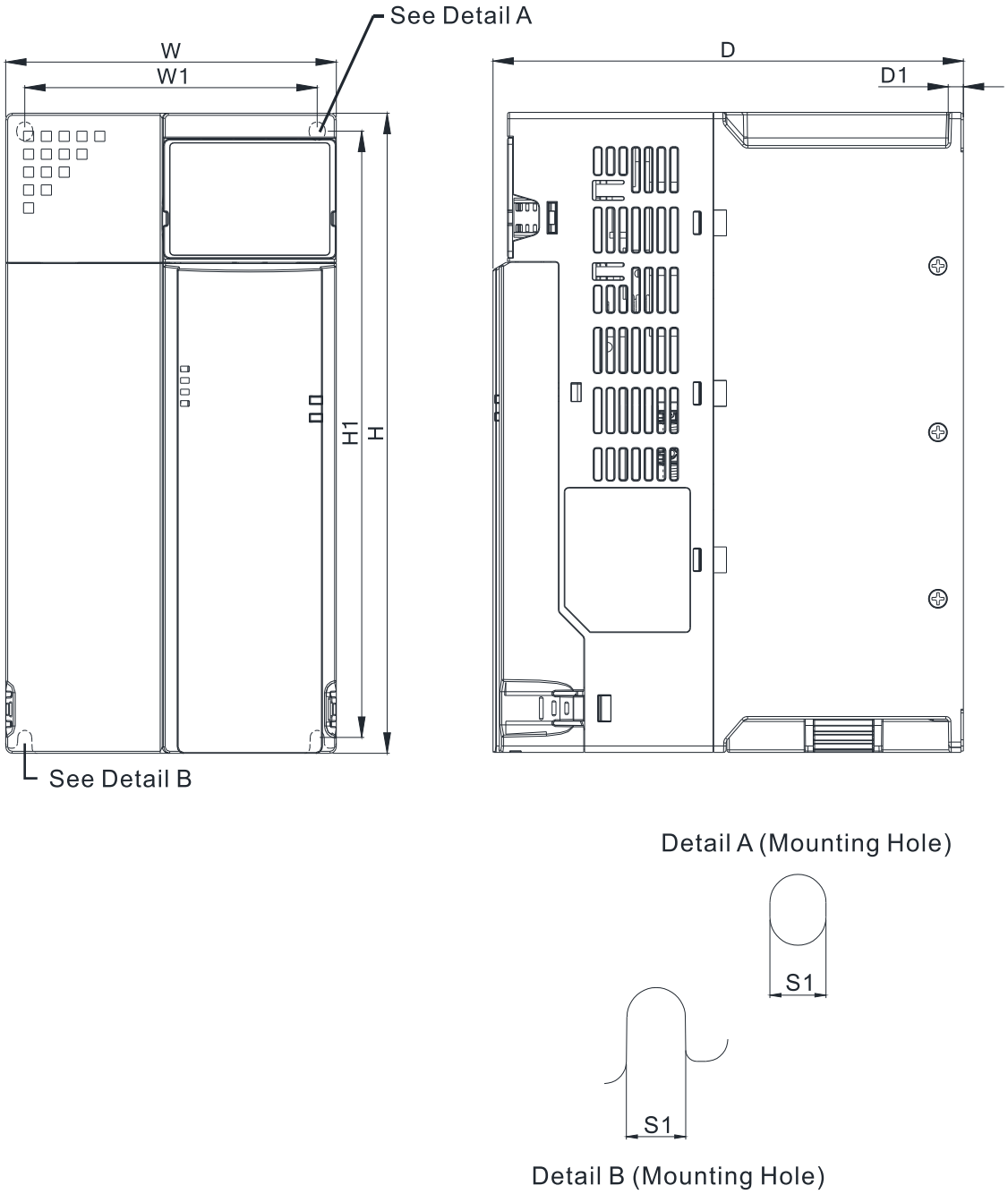

Figure 2-8

Unit: mm (inch)

Frame	W	H	D	W1	H1	D1	S1
E1	130.0 (5.12)	250.0 (9.84)	185.0 (7.83)	115.0 (4.53)	236.8 (9.32)	6.0 (0.24)	5.5 (0.22)
E2	130.0 (5.12)	250.0 (9.84)	219.0 (8.62)	115.0 (4.53)	236.8 (9.32)	6.0 (0.24)	5.5 (0.22)

Table 2-8

2-6 Frame F

F1: VFD65AMS23ANSAA; VFD65AMS23ENSAA; VFD38AMS43ANSAA; VFD38AMS43ENSAA; VFD45AMS43ANSAA; VFD45AMS43ENSAA

F2: VFD38AMS43AFSAA; VFD45AMS43AFSAA

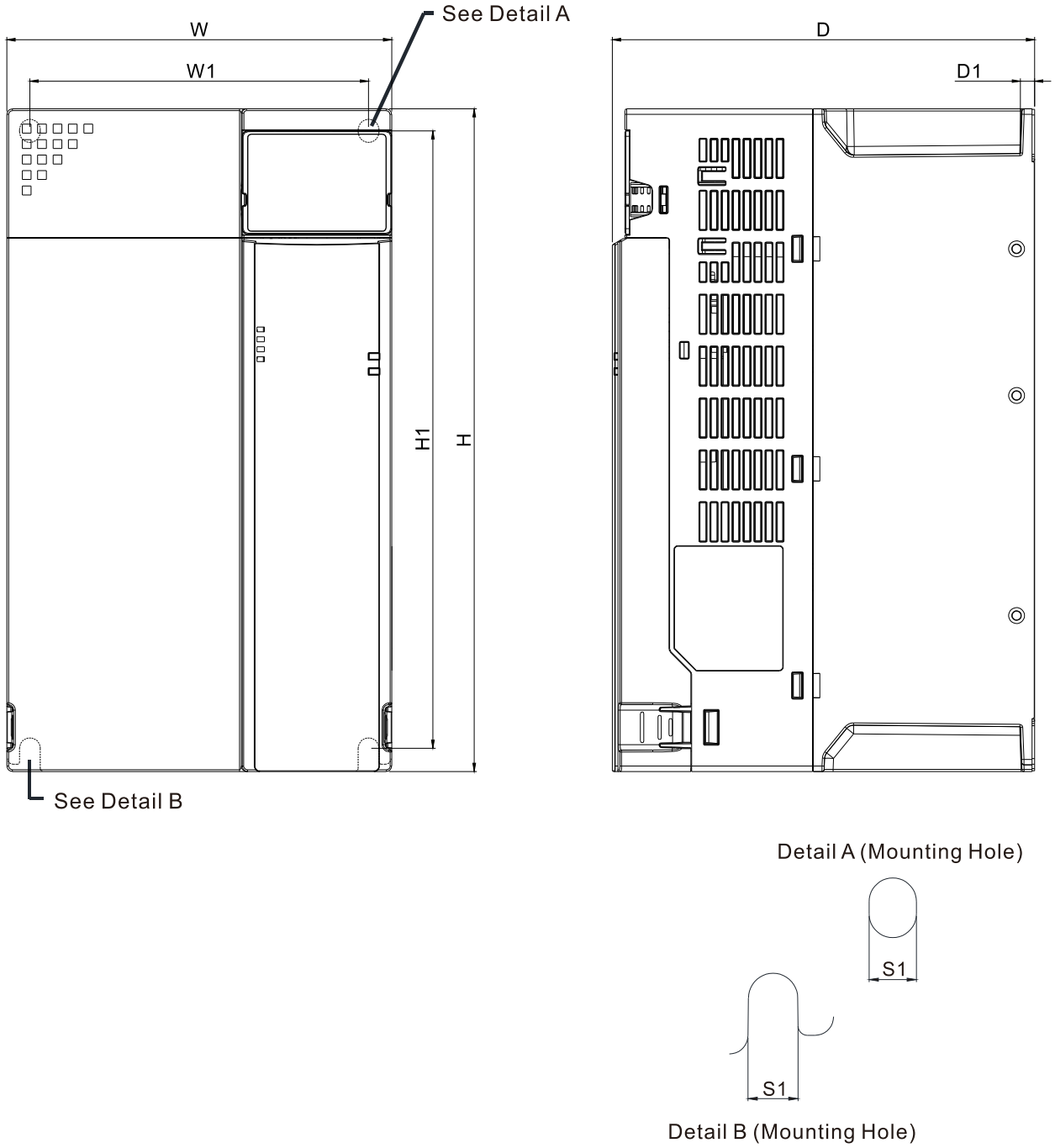

Figure 2-9

Unit: mm (inch)

Frame	W	H	D	W1	H1	D1	S1
F1	175.0 (6.89)	300.0 (11.81)	192.0 (7.56)	154.0 (6.06)	279.5 (11.00)	6.5 (0.26)	8.4 (0.33)
F2	175.0 (6.89)	300.0 (11.81)	244.0 (9.61)	154.0 (6.06)	279.5 (11.00)	6.5 (0.26)	8.4 (0.33)

Table 2-9

2-7 Digital Keypad

KPMS-LE01

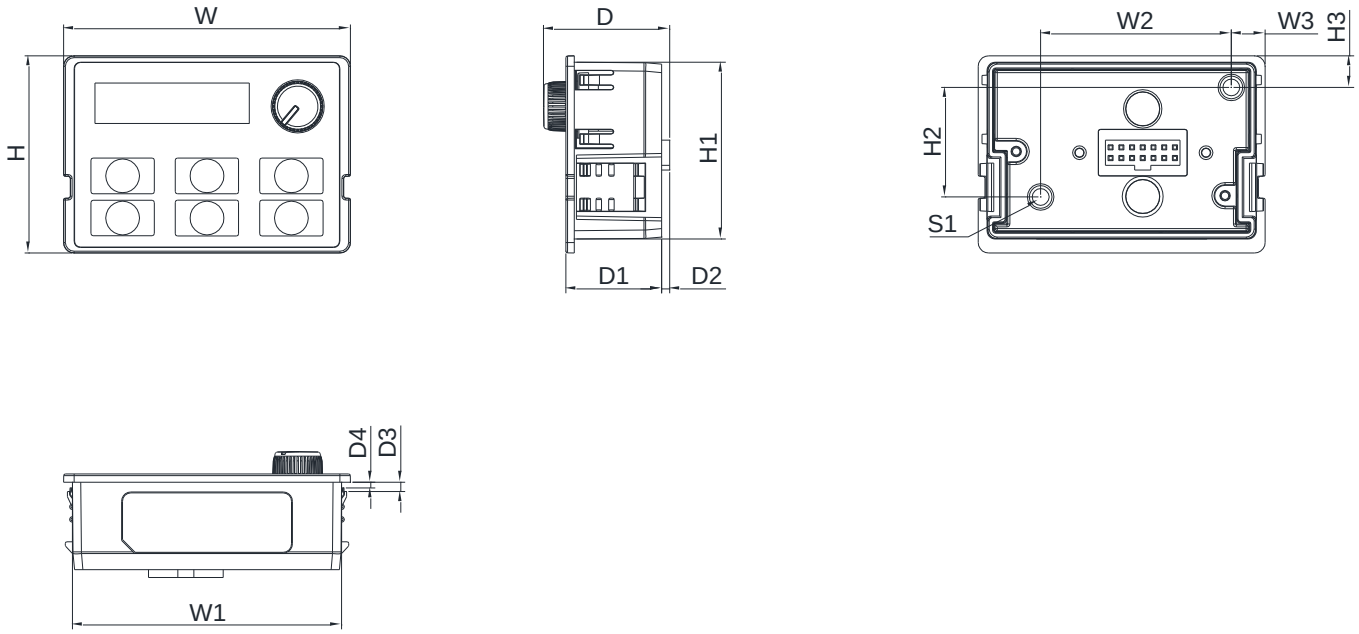

Figure 2-10

Unit: mm (inch)

W	W1	W2	W3	H	H1	H2
68.0 (2.67)	63.8 (2.51)	45.2 (1.78)	8.0 (0.31)	46.8 (1.84)	42.0 (1.65)	26.0 (1.02)

H3	D	D1	D2	D3	D4	S1
7.5 (0.31)	30.0 (1.18)	22.7 (0.89)	2.0 (0.08)	2.2 (0.09)	1.3 (0.05)	M3*0.5(2X)

Table 2-10

[This page intentionally left blank]

Chapter 3 Installation

3-1 Mounting Clearance

3-2 Airflow and Power Dissipation

3-1 Mounting Clearance

- ☑ Prevent fiber particles, scraps of paper, shredded wood, sawdust, metal particles, etc. from adhering to the heat sink.
- ☑ Install the AC motor drive in a metal cabinet. When installing one drive below another one, use a metal separator between the AC motor drives to prevent mutual heating and to prevent the risk of fire accident.
- ☑ Install the AC motor drive in a Pollution Degree 2 environment with clean and circulating air. A clean and circulating environment means air without polluting substances and dust.
- ☑ Mount the drive in an IP54 cabinet in order to maintain the Pollution Degree 2 or in a pollution-controlled environment. When installing the AC motor drive in a Pollution Degree 2 (IEC/EN 60664-1) environment, only nonconductive pollution occurs for the electrical equipment in the cabinet and thermostatic chamber and temporary conductivity caused by condensation is expected.

The appearances shown in the following figures are for reference only. The actual motor drives may look different.

Airflow direction: (Blue arrow) Inflow (Red arrow) Outflow (Black) Distance

Single drive installation

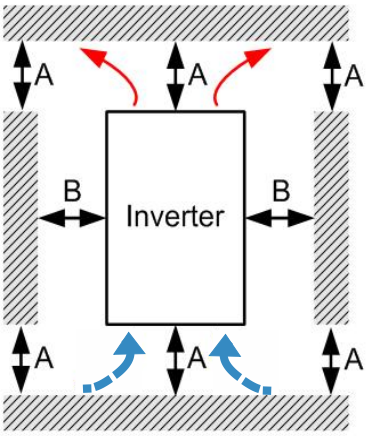

Figure 3-1

Side-by-side horizontal installation / Zero stack installation

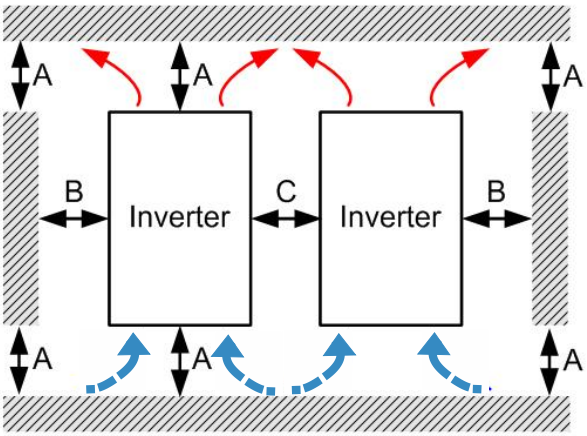

Figure 3-2

Minimum mounting clearance

Installation method	mounting clearance (mm)					Max. Ambient temperature (℃)	
	A	B	C	D	E	Without derating	derating
Single drive installation	50	30	-	-	-	50	60
Side-by-side horizontal installation	50	30	30	-	-	50	60
Zero stack installation	50	30	0	-	-	40	50

Table 3-1

NOTE: The minimum mounting clearances A–C stated in the table above apply to AC motor drives installation. Failing to follow the minimum mounting clearances may cause the fan to malfunction and heat dissipation problems.

☑ Precautions for plate-mounting model installation, take frame A as an example.

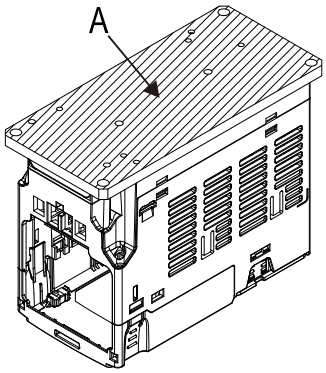

A: Heat generated area

Figure 3-4

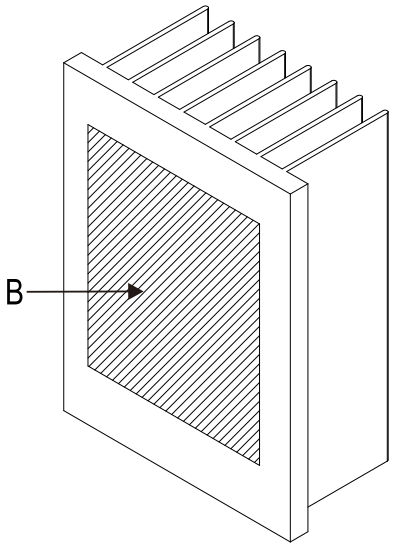

B: Heat dissipation area

Figure 3-5

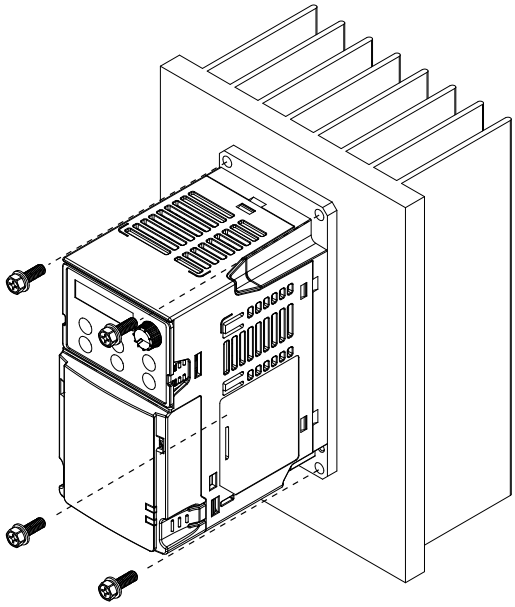

Figure 3-6

1. The temperature of the heat generated area of the plate-mounting models cannot exceed 90°C, otherwise the protection mechanism will be triggered to decrease the carrier wave or to stop, and even shorten the products and components lifetime.
2. The heat dissipation area of the plate-mounting models needs to ≤ 0.12 mm of the flatness and ≤ Ra 0.8 of the surface roughness.
3. The heat generated area and dissipation area must be clean and free of foreign matter, and apply the heat conductive agent between these two areas.
4. Screw spec.is M5 of grade 5.8 (Min.) and the suggested torque value is 28 kg-cm / (24.3 lb-in.) / (2.74 Nm).

3-2 Airflow and Power Dissipation

Frame	Airflow Rate for Cooling			Power Dissipation for AC Motor Drive		
	Model No.	Flow Rate (Unit: cfm)	Flow Rate (Unit: m^3 / hr)	Loss External (Heat sink, unit: W)	Internal (Unit: W)	Total (Unit: W)
A	VFD1A6MS11ANSAA VFD1A6MS11ENSAA	0.0	0.0	8.0	10.0	18.0
	VFD2A5MS11ANSAA VFD2A5MS11ENSAA			14.2	13.1	27.3
	VFD1A6MS21ANSAA VFD1A6MS21ENSAA			8.0	10.3	18.3
	VFD2A8MS21ANSAA VFD2A8MS21ENSAA			16.3	14.5	30.8
	VFD1A6MS23ANSAA VFD1A6MS23ENSAA			8.6	10.0	18.6
	VFD2A8MS23ANSAA VFD2A8MS23ENSAA			16.5	12.6	29.1
	VFD4A8MS23ANSAA VFD4A8MS23ENSAA			31.0	13.2	44.2
	VFD1A5MS43ANSAA VFD1A5MS43ENSAA			17.6	11.1	28.7
	VFD2A7MS43ANSAA VFD2A7MS43ENSAA VFD2A7MS43PNSAA			30.5	17.8	48.3
	VFD1A7MS53ANSAA			23.5	12.5	36
B	VFD1A6MS21AFSAA	0.0	0.0	8.0	10.3	18.3
	VFD2A8MS21AFSAA	10.0	16.99	16.3	14.5	30.8
	VFD4A8MS21ANSAA VFD4A8MS21ENSAA	0.0	0.0	29.1	20.1	49.2
	VFD4A8MS21AFSAA	10.0	16.99	29.1	20.1	49.2
	VFD7A5MS23ANSAA VFD7A5MS23ENSAA			50.1	24.2	74.3
	VFD1A5MS43AFSAA			17.6	11.1	28.7
	VFD2A7MS43AFSAA			30.5	17.8	48.3
	VFD4A2MS43ANSAA VFD4A2MS43ENSAA VFD4A2MS43AFSAA VFD4A2MS43PNSAA			45.9	21.7	67.6
	VFD3A0MS53ANSAA			38.1	19	57.1
C	VFD4A8MS11ANSAA VFD4A8MS11ENSAA	16.0	27.2	29.1	23.9	53.0
	VFD7A5MS21ANSAA VFD7A5MS21ENSAA VFD7A5MS21AFSAA			46.5	31.0	77.5
	VFD11AMS21ANSAA VFD11AMS21ENSAA VFD11AMS21AFSAA			70.0	35	105
	VFD11AMS23ANSAA VFD11AMS23ENSAA			76.0	30.7	106.7
	VFD17AMS23ANSAA VFD17AMS23ENSAA			108.2	40.1	148.3

Frame	Airflow Rate for Cooling			Power Dissipation for AC Motor Drive		
	Model No.	Flow Rate (Unit: cfm)	Flow Rate (Unit: m^3 / hr)	Loss External (Heat sink, unit: W)	Internal (Unit: W)	Total (Unit: W)
C	VFD5A5MS43ANSAA VFD5A5MS43ENSAA VFD5A5MS43AFSAA VFD5A5MS43PNSAA	16.0	27.2	60.6	22.8	83.4
	VFD7A3MS43ANSAA VFD7A3MS43ENSAA VFD7A3MS43AFSAA VFD7A3MS43PNSAA			75.2	30	105.2
	VFD9A0MS43ANSAA VFD9A0MS43ENSAA VFD9A0MS43AFSAA VFD9A0MS43PNSAA			93.1	42	135.1
	VFD4A2MS53ANSAA			46.6	22.2	68.8
	VFD6A6MS53ANSAA			76.1	30	106.1
D	VFD25AMS23ANSAA VFD25AMS23ENSAA	23.4	39.7	192.8	53.3	246.1
	VFD13AMS43ANSAA VFD13AMS43ENSAA VFD13AMS43AFSAA			132.8	39.5	172.3
	VFD17AMS43ANSAA VFD17AMS43ENSAA VFD17AMS43AFSAA			164.7	55.8	220.5
	VFD9A9MS53ANSAA			93.9	37	130.9
	VFD12AMS53ANSAA			108.4	51	159.4
E	VFD33AMS23ANSAA VFD33AMS23ENSAA	53.7	91.2	244.5	79.6	324.1
	VFD49AMS23ANSAA VFD49AMS23ENSAA			374.2	86.2	460.4
	VFD25AMS43ANSAA VFD25AMS43ENSAA VFD25AMS43AFSAA			234.5	69.8	304.3
	VFD32AMS43ANSAA VFD32AMS43ENSAA VFD32AMS43AFSAA			319.8	74.3	394.1
F	VFD65AMS23ANSAA VFD65AMS23ENSAA	67.9	115.2	492.0	198.2	690.2
	VFD38AMS43ANSAA VFD38AMS43ENSAA VFD38AMS43AFSAA			423.5	181.6	605.1
	VFD45AMS43ANSAA VFD45AMS43ENSAA VFD45AMS43AFSAA			501.1	200.3	701.4

Table 3-2

[This page intentionally left blank]

Chapter 4 Wiring

4-1 System Wiring Diagram

4-2 Wiring

After removing the front cover, verify that the power and control terminals are clearly noted. Read the following precautions before wiring.

DANGER	☑ **Turn off the AC motor drive power** before doing any wiring. A charge with hazardous voltages may remain in the DC bus capacitors even after the power has been turned off for a short time. Measure the remaining voltage with a DC voltmeter on +1/DC+ and DC- before doing any wiring. For your safety, do not start wiring before the voltage drops to a safe level (less than 25 V_{DC}). Installing wiring with a residual voltage may cause personal injury, sparks and a short circuit. ☑ Only qualified personnel familiar with AC motor drives are allowed to perform installation, wiring and commissioning. Make sure the power is turned off before wiring to prevent electric shock. ☑ Make sure that power is only applied to the R/L1, S/L2, and T/L3 terminals. Failure to comply may result in damage to the equipment. The voltage and current must be in the range indicated on the nameplate (refer to Section 1-1 Nameplate Information for details). ☑ All units must be grounded directly to a common ground terminal to prevent damage from a lightning strike or electric shock and reduce noise interference. ☑ Tighten the screws of the main circuit terminals to prevent sparks caused by screws loosened due to vibration.
CAUTION	☑ For you safety, choose wires that comply with local regulations when wiring. ☑ Check the following items after finishing the wiring: 3. Are all connections correct? 4. Are there any loose wires? 5. Are there any short circuits between the terminals or to ground?

4-1 System Wiring Diagram

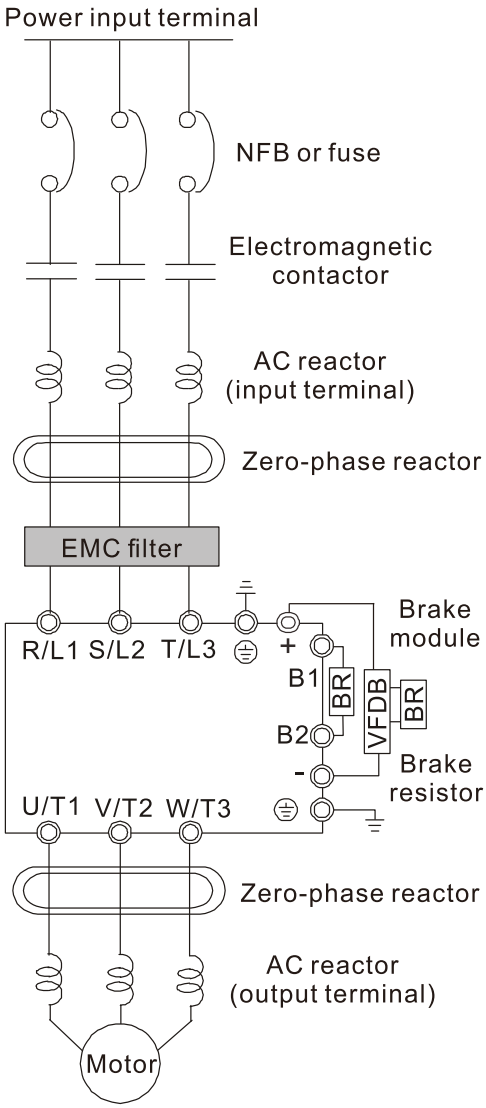

Figure 4-1

Power input terminal	Supply power according to the rated power specifications indicated in the manual (refer to Chapter 9 Specification).
NFB or fuse	There may be a large inrush current during power on. Refer to Section 7-2 NFB to select a suitable NFB or Section 7-3 Fuse Specification Chart.
Electromagnetic contactor	Switching the power ON/OFF on the primary side of the electromagnetic contactor can turn the drive ON/OFF, but frequent switching can cause machine failure. Do not switch ON/OFF more than once an hour. Do not use the electromagnetic contactor as the power switch for the drive; doing so shortens the life of the drive. Refer to Section 7-2 Magnetic Contactor / Air Circuit Breaker to select the electromagnetic contactor that meets your requirement.
AC reactor (input terminal)	When the main power supply capacity is greater than 500 kVA, or when it switches into the phase capacitor, the instantaneous peak voltage and current generated may destroy the internal circuit of the drive. It is recommended that you install an input side AC reactor in the drive. This also improves the power factor and reduces power harmonics. The wiring distance should be within 10 m. Refer to Section 7-4 AC/DC Reactor for details.
Zero phase reactor	Used to reduce radiated interference, especially in environments with audio devices, and reduce input and output side interference. The effective range is AM band to 10 MHz. Refer to Section 7-5 Zero Phase Reactors for details.
EMC filter	Can be used to reduce electromagnetic interference. Refer to Section 7-6 EMC Filter for details.
Brake module & Brake resistor (BR)	Used to shorten the deceleration time of the motor. Refer to Section 7-1 Brake Resistors and Brake Units Used in AC Motor Drives for details.
AC reactor (output terminal)	The motor cable length affects the size of the reflected wave on the motor end. It is recommended that you install an AC output reactor when the motor wiring length exceeds the value listed in Section 7-4.

Table 4-1

4-2 Wiring

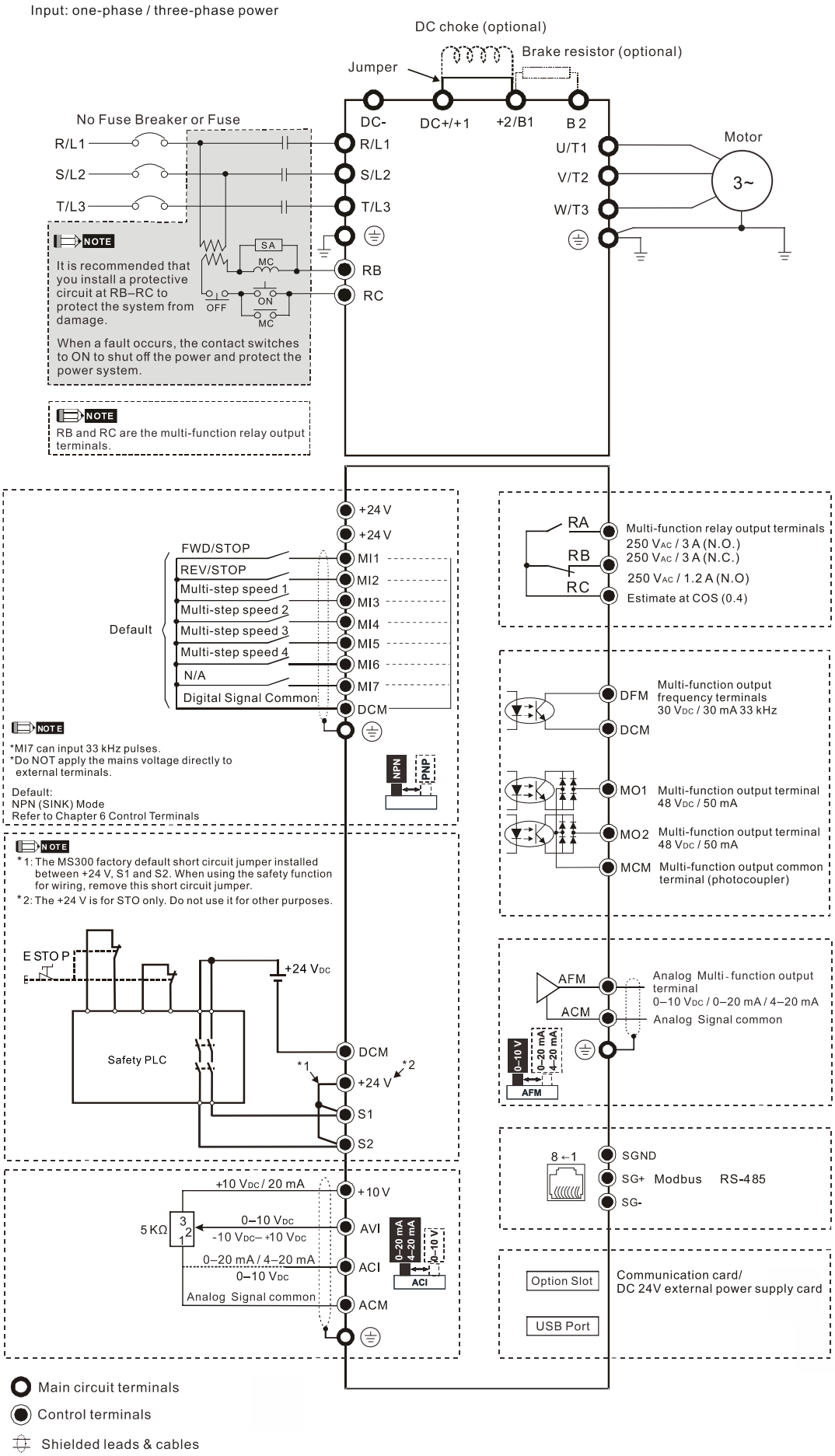
Input: one-phase / three-phase power
DC choke (optional)
Brake resistor (optional)
Jumper
No Fuse Breaker or Fuse
R/L1
S/L2
T/L3
DC-
DC+/+1
+2/B1
B 2
U/T1
V/T2
W/T3
Motor
3~
NOTE
It is recommended that you install a protective circuit at RB–RC to protect the system from damage.
When a fault occurs, the contact switches to ON to shut off the power and protect the power system.
SA
MC
OFF
ON
RB
RC
NOTE
RB and RC are the multi-function relay output terminals.
+24 V
FWD/STOP
REV/STOP
Multi-step speed 1
Multi-step speed 2
Multi-step speed 3
Multi-step speed 4
N/A
Digital Signal Common
Default
MI1
MI2
MI3
MI4
MI5
MI6
MI7
DCM
NOTE
*MI7 can input 33 kHz pulses.
*Do NOT apply the mains voltage directly to external terminals.
Default:
NPN (SINK) Mode
Refer to Chapter 6 Control Terminals
NPN
PNP
RA
RB
RC
Multi-function relay output terminals
250 VAC / 3 A (N.O.)
250 VAC / 3 A (N.C.)
250 VAC / 1.2 A (N.O)
Estimate at COS (0.4)
DFM
DCM
Multi-function output frequency terminals
30 VDC / 30 mA 33 kHz
MO1
Multi-function output terminal
48 VDC / 50 mA
MO2
Multi-function output terminal
48 VDC / 50 mA
MCM
Multi-function output common terminal (photocoupler)
NOTE
*1: The MS300 factory default short circuit jumper installed between +24 V, S1 and S2. When using the safety function for wiring, remove this short circuit jumper.
*2: The +24 V is for STO only. Do not use it for other purposes.
E STOP
+24 VDC
Safety PLC
DCM
+24 V
S1
S2
*1
*2
AFM
ACM
Analog Multi-function output terminal
0–10 VDC / 0–20 mA / 4–20 mA
Analog Signal common
0–10 V
0–20 mA
4–20 mA
AFM
8←1
SGND
SG+
SG-
Modbus
RS-485
+10 VDC / 20 mA
+10 V
5 KΩ
0–10 VDC
-10 VDC– +10 VDC
AVI
0–20 mA / 4–20 mA
0–10 VDC
ACI
Analog Signal common
ACM
Option Slot
USB Port
Communication card/
DC 24V external power supply card
Main circuit terminals
Control terminals
Shielded leads & cables

Chapter 5 Main Circuit Terminals

5-1 Main Circuit Diagram

5-2 Main Circuit Terminal Specifications

DANGER	☑ Tighten the screws in the main circuit terminal to prevent sparks caused by screws loosened due to vibration. ☑ If necessary, use an inductive filter only at the motor output terminals U/T1, V/T2, W/T3 of the AC motor drive. DO NOT use phase-compensation capacitors or L-C (Inductance-Capacitance) or R-C (Resistance-Capacitance), unless approved by Delta. ☑ DO NOT connect phase-compensation capacitors or surge absorbers at the output terminals of AC motor drives. ☑ DO NOT connect brake resistors directly to +1/DC+ to DC-, +2/B1 to DC- to prevent damage to the drive or to the brake resistors. ☑ Ensure proper insulation of the main circuit wiring in accordance with the relevant safety regulations.
CAUTION	Main input power terminals ☑ R/L1, S/L2 and T/L3 have no phase-sequence requirement; they can be connected in any sequence. ☑ Add a magnetic contactor (MC) to the power input wiring to cut off power quickly and reduce malfunctions when the AC motor drive protection function activates. Both ends of the MC should have an R-C surge absorber. ☑ Use voltage and current within the specifications in Chapter 09. Refer to Chapter 09 Specifications for details. ☑ Although the leakage current of one single MS300 drive is less than 10_{DC} mA, electric shock may still occur due to the leakage current from other equipment such as motors and leads. Therefore, it is recommended that you install one of the followings to prevent danger caused by electric shock. 6. Use a copper wire with a cross-section of 10 mm^2 or above or an aluminum wire of 16 mm^2 as the connection between the casing and the ground. 7. Install an Earth Leakage Circuit Breaker (ELCB). ☑ Due to the high frequency current of the leakage current of the AC motor drive, select a Type B ELCB specifically for the drive when using an ELCB. For tripping or malfunctions on the usage of ELCB, refer to Section 7-8 Capacitive Filter for details. The power system of the AC motor drive affects the power factor, so select a MCCB with larger capacity. ☑ Use shielded wire or conduit for the power wiring and ground the two ends of the shielding or conduit. ☑ DO NOT run and stop the AC motor drives by turning the power ON and OFF. Run and stop the AC motor drives by sending the RUN and STOP commands through the control terminals or the keypad. If you still need to run and stop the AC motor drives by turning the power ON and OFF, do so no more often than ONCE per hour. ☑ To comply with UL standards, connect the drive to a three-phase three-wire or three-phase four-wire Wye system type of mains power system.

Output terminals of the main circuit

☑ Use well-insulated motors to prevent any electric leakage from motors.

☑ When the AC drive output terminals U/T1, V/T2, and W/T3 are connected to the motor terminals U/T1, V/T2, and W/T3 respectively, the FWD LED indicator on the digital keypad is ON. This means the AC motor drive executes running forward, and the motor rotates counterclockwise (viewed from the shaft end of the motor, as shown in Figure 5-1).

On the contrary, when the REV LED indicator lights, the AC motor drive executes running in reverse, and the motor rotates in an opposite direction to Figure 5-1. If the AC motor drive executes running forward but the motor rotates in a reverse direction, exchange any two of the U/T1, V/T2 and W/T3 motor leads.

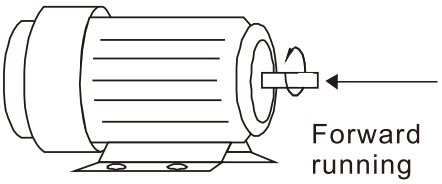

Figure 5-1

Terminals for connecting DC reactor, external brake resistor and DC circuit

☑ Use the terminals, as shown in Figure 5-2, to connect a DC reactor to improve the power factor and reduce harmonics. A jumper is connected to these terminals at the factory. Remove that jumper before connecting to a DC reactor.

☑ Tighten the jumper if a DC reactor is not connected and DC+/+1 and +2/B1 terminals are used for common DC bus or brake resistors in order to prevent the AC motor drive from losing power and damage to the terminals. If the jumper is missing due to wiring, refer to the recommended main circuit terminal wire gauge mentioned in Section 5-2 to short-circuit the DC+/+1 and +2/B1 terminals.

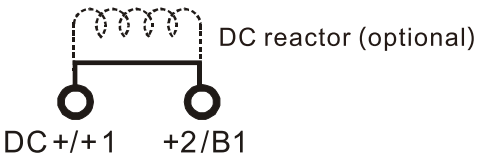

Figure 5-2

☑ Install an external brake resistor for applications in frequent deceleration to stop, short deceleration time (such as high frequency operation and heavy load operation), too low braking torque, or increased braking torque.

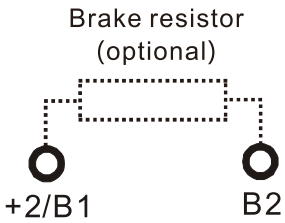

Figure 5-3

☑ Connect the external brake resistor to +2/B1, B2 terminals of the AC motor drives.

	☑ DO NOT connect two ends of the brake resistor directly to DC+/+1 and DC-, +2/B1 to DC- to prevent damage to the drive and to the brake resistor. ☑ When connecting DC+/+1 and DC- in common DC bus applications, refer to Section 5-2 (Main Circuit Terminal Specifications) for the wiring terminal specification and the wire gauge information.

Remove the front cover

- Remove the front cover before wiring the main circuit terminals and control circuit terminals. Remove the cover according to the figures below.
- The example uses the Frame A model. For different frame size models, use the same removing method.

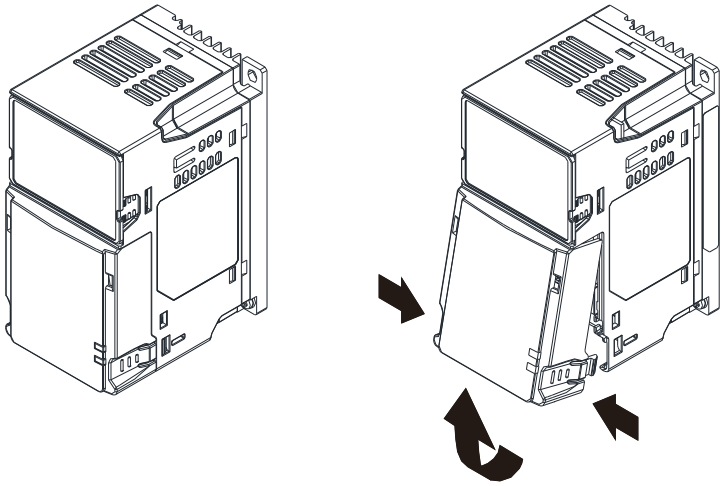

Press the clip on both sides, and then remove the cover by rotating it.

Figure 5-4

5-1 Main Circuit Diagram

Input: one-phase / three-phase power

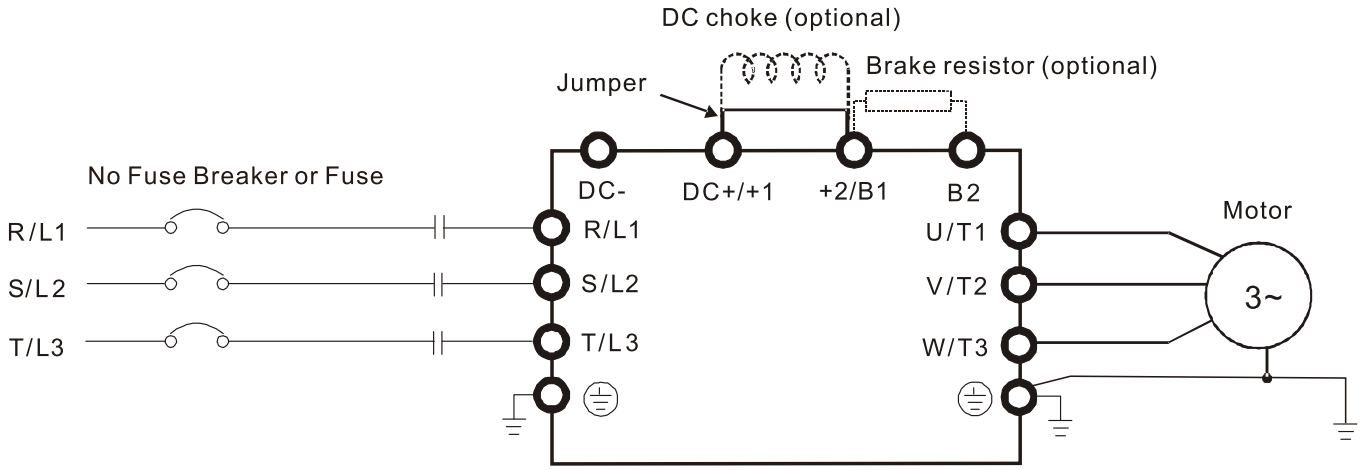

Figure 5-5

Terminals	Descriptions
R/L1, S/L2	Mains input terminals (one-phase)
R/L1, S/L2, T/L3	Mains input terminals (three-phase)
U/T1, V/T2, W/T3	AC motor drive output terminals for connecting three-phase IM and PM motors.
+1, +2	Connections for DC reactor to improve the power factor. Remove the jumper before installing a DC reactor.
DC+, DC-	Connections for brake unit (VFDB series) Common DC bus
B1, B2	Connections for brake resistor (optional). Refer to Section 7-1 for details.
⏚	Ground connection; comply with local regulations.

Table 5-1

5-2 Main Circuit Terminal Specifications

- Use the specified ring lug for main circuit terminal wiring. See Figure 5-6 and Figure 5-7 for ring lug specifications. For other types of wiring, use the wires that comply with the local regulations.
- After crimping the wire to the ring lug (must be UL and CSA approved R/C (YDPU2/8)), install heat shrink tubing rated at a minimum of 600 V_{AC} insulation over the live part. Refer to Figure 5-7.
- Main circuit terminals:

  R/L1, S/L2, T/L3, U/T1, V/T2, W/T3, ⏚, DC-, DC+/+1, +2/B1, B2

  NOTE: There is no T/L3 terminal for one-phase models.

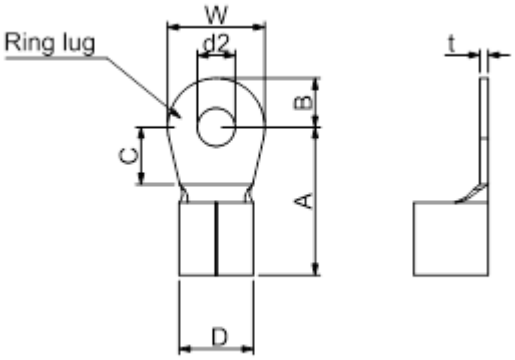

Figure 5-6

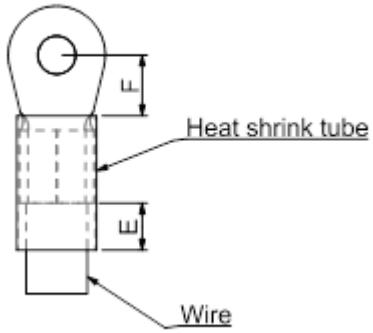

Figure 5-7

Dimensions of Ring Lug

The part # of the ring lugs (produced by K.S. Terminals Inc.) in the table below are for reference only. You can buy other ring lugs of your choice to match with different frame sizes.

Unit: mm

Frame	*AWG	Kit P/N	A (MAX)	B (MAX)	C (MIN)	D (MAX)	d2 (MIN)	E (MIN)	F (MIN)	W (MAX)	t (MAX)
A	18	RNBS 1-3.7	9.8	3.2	4.8	4.1	3.7	13.0	4.2	6.6	0.8
	16	RNBS 2-3.7									
	14	RNBS 2-3.7									
B	18	RNBS1-4	12.1	3.6	6.1	5.6	4.3	13.0	4.5	7.2	1
	16	RNBS1-4									
	14	RNBS2-4									
	12	RNBS5-4									
C	14	RNBS2-4	17.8	5.0	6.1	7.2	4.3	13.0	5.5	10.5	1.2
	12	RNBS5-4									
	10	RNBS5-4									
	8	RNBS8-4									
D	10	RNBS5-4	17.8	5.0	6.1	7.2	4.3	13.0	5.5	10.5	1.2
	8	RNBS8-4									
E	6	RNB14-5	27.1	6.1	10.5	11.5	5.3	13.0	6.5	12.6	1.7
	4	RNBS22-5									
F	6	RNBS14-6	35.0	9.0	13.3	14.0	6.2	13.0	10.0	19.5	1.8
	4	RNBS22-6									
	2	RNBS38-6									

*AWG: Refer to the following tables for the wire size specification for models in each frame. Table 5-2

Frame A

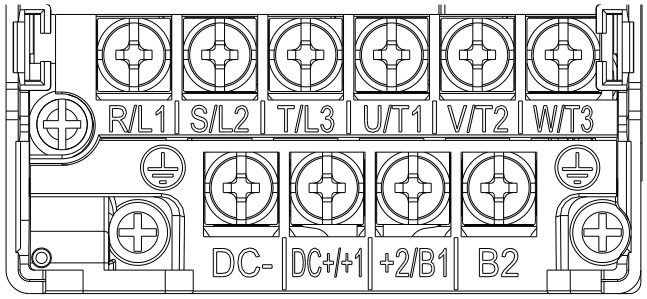

Figure 5-8

- If you install at Ta 50°C above environment, use copper wires that have a voltage rating of 600 V and are temperature resistant to 90°C or above.
- If you install at Ta 50°C environment, use copper wires that have a voltage rating of 600 V and are temperature resistant to 75°C or 90°C.
- For VFD2A5MS11ANSAA and VFD2A5MS11ENSAA models: If you install at Ta 40°C above environment, use copper wires that have a voltage rating of 600 V and are temperature resistant to 90°C or above.
- To be UL installation compliant, you must use copper wires when installing. The wire gauge is based on a temperature resistance of 75°C, in accordance with UL requirements and recommendations.
- Do not reduce the wire gauge when using high-temperature resistant wires.

<table>
<tr><th rowspan="2">Models</th><th colspan="3">Main Circuit Terminals
R/L1, S/L2, T/L3, U/T1, V/T2, W/T3, DC-, DC+/+1, +2/B1, B2</th><th colspan="3">Grounding Terminals
⏚</th></tr>
<tr><th>Max. Wire Gauge</th><th>Min. Wire Gauge</th><th>Screw Size & Torque (±10%)</th><th>Max. Wire Gauge</th><th>Min. Wire Gauge</th><th>Screw Size & Torque (±10%)</th></tr>
<tr><td>VFD1A6MS11ANSAA
VFD1A6MS11ENSAA</td><td rowspan="12">2.5 mm^2
(14 AWG)</td><td rowspan="2">2.5 mm^2
(14 AWG)</td><td rowspan="12">M3.5
9 kg-cm
(7.8 lb-in.)
(0.88 Nm)</td><td rowspan="12">2.5 mm^2
(14 AWG)</td><td rowspan="12">2.5 mm^2
(14 AWG)</td><td rowspan="12">M3.5
9 kg-cm
(7.8 lb-in.)
(0.88 Nm)</td></tr>
<tr><td>VFD2A5MS11ANSAA
VFD2A5MS11ENSAA</td></tr>
<tr><td>VFD1A6MS21ANSAA
VFD1A6MS21ENSAA</td><td>1.5 mm^2
(16 AWG)</td></tr>
<tr><td>VFD2A8MS21ANSAA
VFD2A8MS21ENSAA</td><td>2.5 mm^2
(14 AWG)</td></tr>
<tr><td>VFD1A6MS23ANSAA
VFD1A6MS23ENSAA</td><td rowspan="2">0.75 mm^2
(18 AWG)</td></tr>
<tr><td>VFD2A8MS23ANSAA
VFD2A8MS23ENSAA</td></tr>
<tr><td>VFD4A8MS23ANSAA
VFD4A8MS23ENSAA</td><td>1.5 mm^2
(16 AWG)</td></tr>
<tr><td>VFD1A5MS43ANSAA
VFD1A5MS43ENSAA</td><td rowspan="3">0.75 mm^2
(18 AWG)</td></tr>
<tr><td>VFD2A7MS43ANSAA
VFD2A7MS43ENSAA
VFD2A7MS43PNSAA</td></tr>
<tr><td>VFD1A7MS53ANSAA</td></tr>
</table>

Table 5-3

Frame B

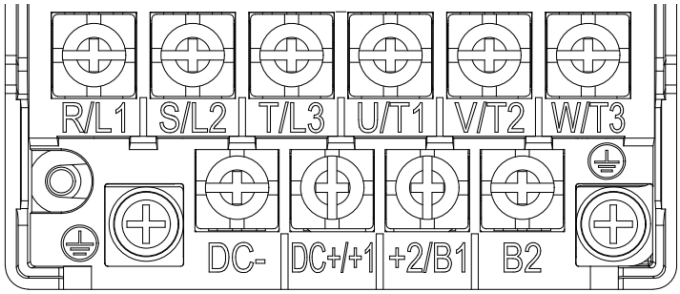

Figure 5-9

- If you install at Ta 50°C above environment, use copper wires that have a voltage rating of 600 V and are temperature resistant to 90°C or above.
- If you install at Ta 50°C environment, use copper wires that have a voltage rating of 600 V and are temperature resistant to 75°C or 90°C.
- To be UL installation compliant, you must use copper wires when installing. The wire gauge is based on a temperature resistance of 75°C, in accordance with UL requirements and recommendations. Do not reduce the wire gauge when using high-temperature resistant wires.

<table>
<tr><th rowspan="2">Models</th><th colspan="3">Main Circuit Terminals
R/L1, S/L2, T/L3, U/T1, V/T2, W/T3, DC-, DC+/+1, +2/B1, B2</th><th colspan="3">Grounding Terminals
⏚</th></tr>
<tr><th>Max. Wire Gauge</th><th>Min. Wire Gauge</th><th>Screw Size & Torque (±10%)</th><th>Max. Wire Gauge</th><th>Min. Wire Gauge</th><th>Screw Size & Torque (±10%)</th></tr>
<tr><td>VFD1A6MS21AFSAA</td><td rowspan="9">4 mm^2
(12 AWG)</td><td>1.5 mm^2
(16 AWG)</td><td rowspan="9">M4
15 kg-cm
(13.0 lb-in.)
(1.47 Nm)</td><td rowspan="2">2.5 mm^2
(14 AWG)</td><td rowspan="2">2.5 mm^2
(14 AWG)</td><td rowspan="9">M4
15 kg-cm
(13.0 lb-in.)
(1.47 Nm)</td></tr>
<tr><td>VFD2A8MS21AFSAA</td><td>2.5 mm^2
(14 AWG)</td></tr>
<tr><td>VFD4A8MS21AFSAA
VFD4A8MS21ANSAA
VFD4A8MS21ENSAA</td><td rowspan="2">4 mm^2
(12 AWG)</td><td rowspan="2">4 mm^2
(12 AWG)</td><td rowspan="2">4 mm^2
(12 AWG)</td></tr>
<tr><td>VFD7A5MS23ANSAA
VFD7A5MS23ENSAA</td></tr>
<tr><td>VFD1A5MS43AFSAA</td><td rowspan="2">0.75 mm^2
(18 AWG)</td><td rowspan="4">2.5 mm^2
(14 AWG)</td><td rowspan="4">2.5 mm^2
(14 AWG)</td></tr>
<tr><td>VFD2A7MS43AFSAA</td></tr>
<tr><td>VFD4A2MS43ANSAA
VFD4A2MS43ENSAA
VFD4A2MS43AFSAA
VFD4A2MS43PNSAA</td><td rowspan="2">2.5 mm^2
(14 AWG)</td></tr>
<tr><td>VFD3A0MS53ANSAA</td><td>0.75 mm^2
(18 AWG)</td><td>2.5 mm^2
(14 AWG)</td><td>2.5 mm^2
(14 AWG)</td></tr>
</table>

Table 5-4

Frame C

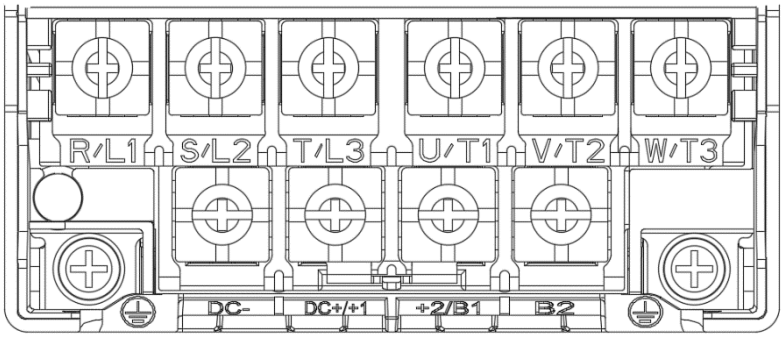

Figure 5-10

- If you install at Ta 50°C above environment, use copper wires that have a voltage rating of 600 V and are temperature resistant to 90°C or above.
- If you install at Ta 50°C environment, use copper wires that have a voltage rating of 600 V and are temperature resistant to 75°C or 90°C.
- To be UL installation compliant, you must use copper wires when installing. The wire gauge is based on a temperature resistance of 75°C, in accordance with UL requirements and recommendations. Do not reduce the wire gauge when using high-temperature resistant wires.

<table>
<tr><th rowspan="2">Models</th><th colspan="3">Main Circuit Terminals
R/L1, S/L2, T/L3, U/T1, V/T2, W/T3, DC-, DC+/+1, +2/B1, B2</th><th colspan="3">Grounding Terminals
⏚</th></tr>
<tr><th>Max. Wire Gauge</th><th>Min. Wire Gauge</th><th>Screw Size & Torque (±10%)</th><th>Max. Wire Gauge</th><th>Min. Wire Gauge</th><th>Screw Size & Torque (±10%)</th></tr>
<tr><td>VFD4A8MS11ANSAA
VFD4A8MS11ENSAA</td><td rowspan="15">10 mm^2
(8 AWG)</td><td rowspan="3">10 mm^2
(8 AWG)</td><td rowspan="15">M4
20 kg-cm
(17.4 lb-in.)
(1.96 Nm)</td><td rowspan="3">10 mm^2
(8 AWG)</td><td rowspan="3">10 mm^2
(8 AWG)</td><td rowspan="15">M4
20 kg-cm
(17.4 lb-in.)
(1.96 Nm)</td></tr>
<tr><td>VFD7A5MS21ANSAA
VFD7A5MS21ENSAA
VFD7A5MS21AFSAA</td></tr>
<tr><td>VFD11AMS21ANSAA
VFD11AMS21ENSAA
VFD11AMS21AFSAA</td></tr>
<tr><td>VFD11AMS23ANSAA
VFD11AMS23ENSAA</td><td>6 mm^2
(10 AWG)</td><td>6 mm^2
(10 AWG)</td><td>6 mm^2
(10 AWG)</td></tr>
<tr><td>VFD17AMS23ANSAA
VFD17AMS23ENSAA</td><td>10 mm^2
(8 AWG)</td><td>10 mm^2
(8 AWG)</td><td>10 mm^2
(8 AWG)</td></tr>
<tr><td>VFD5A5MS43ANSAA
VFD5A5MS43ENSAA
VFD5A5MS43AFSAA
VFD5A5MS43PNSAA</td><td rowspan="4">2.5 mm^2
(14AWG)</td><td rowspan="4">2.5 mm^2
(14 AWG)</td><td rowspan="4">2.5 mm^2
(14AWG)</td></tr>
<tr><td>VFD7A3MS43ANSAA
VFD7A3MS43ENSAA
VFD7A3MS43AFSAA
VFD7A3MS43PNSAA</td></tr>
<tr><td>VFD9A0MS43ANSAA
VFD9A0MS43ENSAA
VFD9A0MS43AFSAA
VFD9A0MS43PNSAA</td><td>4 mm^2
(12 AWG)</td><td>4 mm^2
(12 AWG)</td><td>4 mm^2
(12 AWG)</td></tr>
<tr><td>VFD4A2MS53ANSAA</td><td>2.5 mm^2
(14 AWG)</td><td>2.5 mm^2
(14 AWG)</td><td>2.5 mm^2
(14 AWG)</td></tr>
<tr><td>VFD6A6MS53ANSAA</td><td>4 mm^2
(12 AWG)</td><td>4 mm^2
(12 AWG)</td><td>4 mm^2
(12 AWG)</td></tr>
</table>

Table 5-5

Frame D

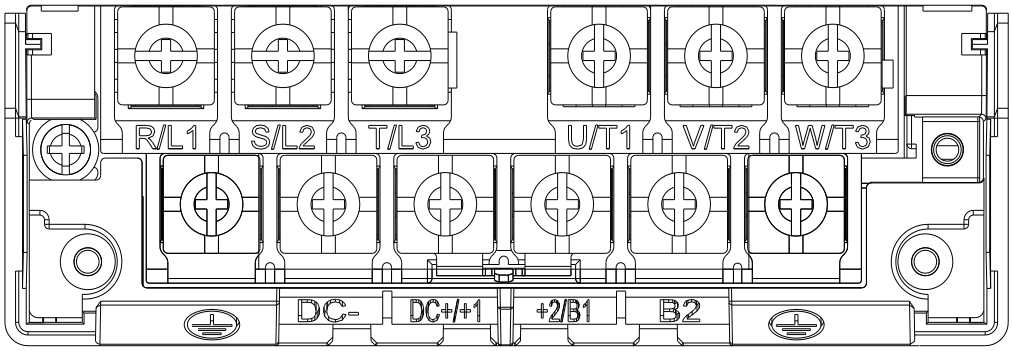

Figure 5-11

- If you install at Ta 50°C above environment, use copper wires that have a voltage rating of 600 V and are temperature resistant to 90°C or above.
- If you install at Ta 50°C environment, use copper wires that have a voltage rating of 600 V and are temperature resistant to 75°C or 90°C.
- For VFD25AMS23ANSAA and VFD25AMS23ENSAA models: If you install at Ta 45°C above environment, use copper wires that have a voltage rating of 600 V and are temperature resistant to 90°C or above.
- To be UL installation compliant, you must use copper wires when installing. The wire gauge is based on a temperature resistance of 75°C, in accordance with UL requirements and recommendations. Do not reduce the wire gauge when using high-temperature resistant wires.

<table>
<tr><th rowspan="2">Models</th><th colspan="3">Main Circuit Terminals
R/L1, S/L2, T/L3, U/T1, V/T2, W/T3, DC-, DC+/+1, +2/B1, B2</th><th colspan="3">Grounding Terminals
⏚</th></tr>
<tr><th>Max. Wire Gauge</th><th>Min. Wire Gauge</th><th>Screw Size & Torque (±10%)</th><th>Max. Wire Gauge</th><th>Min. Wire Gauge</th><th>Screw Size & Torque (±10%)</th></tr>
<tr><td>VFD25AMS23ANSAA
VFD25AMS23ENSAA</td><td rowspan="5">10 mm^2
(8 AWG)</td><td>10 mm^2
(8 AWG)</td><td rowspan="5">M4
20 kg-cm
(17.4 lb-in.)
(1.96 Nm)</td><td>10 mm^2
(8 AWG)</td><td>10 mm^2
(8 AWG)</td><td rowspan="5">M4
20 kg-cm
(17.4 lb-in.)
(1.96 Nm)</td></tr>
<tr><td>VFD13AMS43ANSAA
VFD13AMS43ENSAA
VFD13AMS43AFSAA</td><td>6 mm^2
(10 AWG)</td><td>6 mm^2
(10 AWG)</td><td>6 mm^2
(10 AWG)</td></tr>
<tr><td>VFD17AMS43ANSAA
VFD17AMS43ENSAA
VFD17AMS43AFSAA</td><td>10 mm^2
(8 AWG)</td><td>10 mm^2
(8 AWG)</td><td>10 mm^2
(8 AWG)</td></tr>
<tr><td>VFD9A9MS53ANSAA</td><td rowspan="2">6 mm^2
(10 AWG)</td><td rowspan="2">6 mm^2
(10 AWG)</td><td rowspan="2">6 mm^2
(10 AWG)</td></tr>
<tr><td>VFD12AMS53ANSAA</td></tr>
</table>

Table 5-6

Frame E

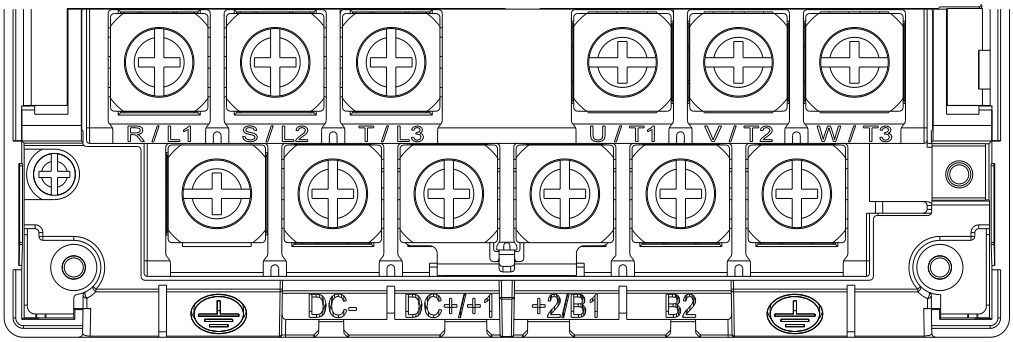

Figure 5-12

- If you install at Ta 50°C above environment, use copper wires that have a voltage rating of 600 V and are temperature resistant to 90°C or above.
- If you install at Ta 50°C environment, use copper wires that have a voltage rating of 600 V and are temperature resistant to 75°C or 90°C.
- For VFD33AMS23ANSAA and VFD33AMS23ENSAA models: If you install at Ta 40°C above environment, use copper wires that have a voltage rating of 600 V and are temperature resistant to 90°C or above.
- For VFD49AMS23ANSAA and VFD49AMS23ENSAA models: If you install at Ta 35°C above environment, use copper wires that have a voltage rating of 600 V and are temperature resistant to 90°C or above.
- For VFD32AMS43ANSAA, VFD32AMS43ENSAA, and VFD32AMS43AFSAA models:
  If you install at Ta 45°C above environment, use copper wires that have a voltage rating of 600 V and are temperature resistant to 90°C or above.
- To be UL installation compliant, you must use copper wires when installing. The wire gauge is based on a temperature resistance of 75°C, in accordance with UL requirements and recommendations. Do not reduce the wire gauge when using high-temperature resistant wires.
- **Wire these drives by ring lugs with specified dimensions.

<table>
<tr><th rowspan="2">Models</th><th colspan="3">Main Circuit Terminals
R/L1, S/L2, T/L3, U/T1, V/T2, W/T3, DC-, DC+/+1, +2/B1, B2</th><th colspan="3">Grounding Terminals
⏚</th></tr>
<tr><th>Max. Wire Gauge</th><th>Min. Wire Gauge</th><th>Screw Size & Torque (±10%)</th><th>Max. Wire Gauge</th><th>Min. Wire Gauge</th><th>Screw Size & Torque (±10%)</th></tr>
<tr><td>VFD33AMS23ANSAA
VFD33AMS23ENSAA</td><td>16 mm^2
(6 AWG)</td><td>16 mm^2
(6 AWG)</td><td rowspan="5">M5
25 kg-cm
(21.7 lb-in.)
(2.45 Nm)</td><td>16 mm^2
(6 AWG)</td><td rowspan="5">16 mm^2
(6 AWG)</td><td rowspan="5">M5
25 kg-cm
(21.7 lb-in.)
(2.45 Nm)</td></tr>
<tr><td>VFD49AMS23ANSAA**
VFD49AMS23ENSAA**</td><td>25 mm^2
(4 AWG)</td><td>25 mm^2
(4 AWG)</td><td>25 mm^2
(4 AWG)</td></tr>
<tr><td>VFD25AMS43ANSAA
VFD25AMS43ENSAA
VFD25AMS43AFSAA</td><td rowspan="2">16 mm^2
(6 AWG)</td><td rowspan="2">16 mm^2
(6 AWG)</td><td rowspan="2">16 mm^2
(6 AWG)</td></tr>
<tr><td>VFD32AMS43ANSAA
VFD32AMS43ENSAA
VFD32AMS43AFSAA</td></tr>
</table>

Table 5-7

Frame F

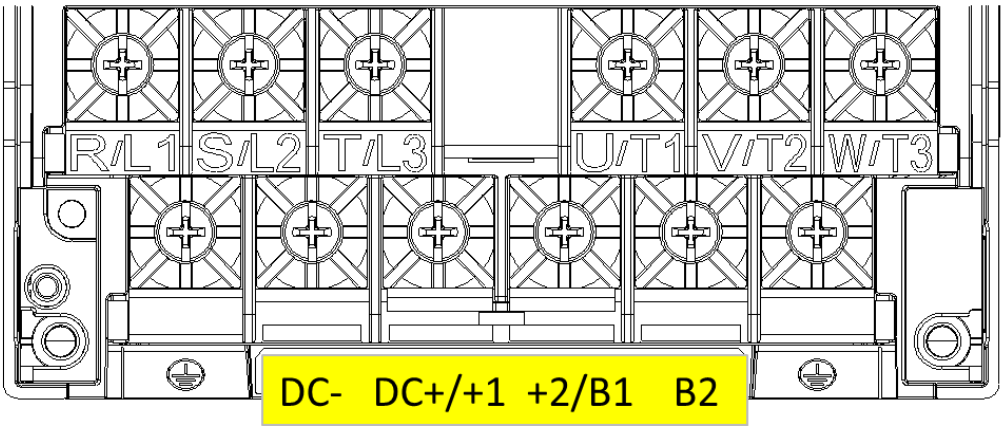

Figure 5-13

- If you install at Ta 50°C above environment, use copper wires that have a voltage rating of 600 V and are temperature resistant to 90°C or above.
- If you install at Ta 50°C environment, use copper wires that have a voltage rating of 600 V and are temperature resistant to 75°C or 90°C.
- For VFD65AMS23ANSAA and VFD65AMS23ENSAA models: If you install at Ta 35°C above environment, use copper wires that have a voltage rating of 600 V and are temperature resistant to 90°C or above.
- To be UL installation compliant, you must use copper wires when installing. The wire gauge is based on a temperature resistance of 75°C, in accordance with UL requirements and recommendations. Do not reduce the wire gauge when using high-temperature resistant wires.

<table>
<tr><th rowspan="2">Models</th><th colspan="3">Main Circuit Terminals
R/L1, S/L2, T/L3, U/T1, V/T2, W/T3, DC-, DC+/+1, +2/B1, B2</th><th colspan="3">Grounding Terminals
⏚</th></tr>
<tr><th>Max. Wire Gauge</th><th>Min. Wire Gauge</th><th>Screw Size & Torque (±10%)</th><th>Max. Wire Gauge</th><th>Min. Wire Gauge</th><th>Screw Size & Torque (±10%)</th></tr>
<tr><td>VFD65AMS23ANSAA
VFD65AMS23ENSAA</td><td rowspan="3">35 mm^2
(2 AWG)</td><td>35 mm^2
(2 AWG)</td><td rowspan="3">M6
40 kg-cm
(34.7 lb-in.)
(3.92 Nm)</td><td>35 mm^2
(2 AWG)</td><td rowspan="3">16 mm^2
(6 AWG)</td><td rowspan="3">M6
40 kg-cm
(34.7 lb-in.)
(3.92 Nm)</td></tr>
<tr><td>VFD38AMS43ANSAA
VFD38AMS43ENSAA
VFD38AMS43AFSAA</td><td>25 mm^2
(4 AWG)</td><td>25 mm^2
(4 AWG)</td></tr>
<tr><td>VFD45AMS43ANSAA
VFD45AMS43ENSAA
VFD45AMS43AFSAA</td><td>35 mm^2
(2 AWG)</td><td>35 mm^2
(2 AWG)</td></tr>
</table>

Table 5-8

[This page is intentionally left blank]

Chapter 6 Control Terminals

6-1 Control Terminal Specifications

CAUTION

Analog input terminals (AVI, ACI, ACM)

- ☑ Analog input signals are easily affected by external noise. Use shielded wiring and keep it as short as possible (less than 20 m) with proper grounding. If the noise is inductive, connecting the shield to the ACM terminal can reduce interference.
- ☑ Use twisted-pair wire for weak analog signals.
- ☑ If the analog input signals are affected by noise from the AC motor drive, connect a capacitor and a ferrite core as shown in Figure 6-1.

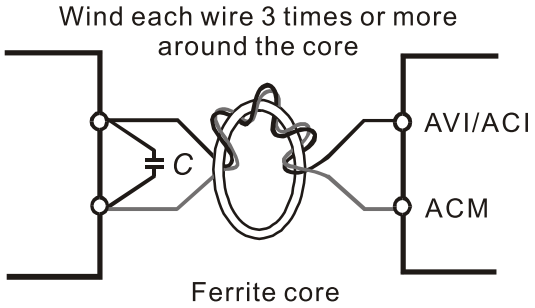

Figure 6-1

Contact input terminals (MI1–MI7, DCM, +24 V_{DC})

① Sink Mode
with internal power (+24 V_{DC})

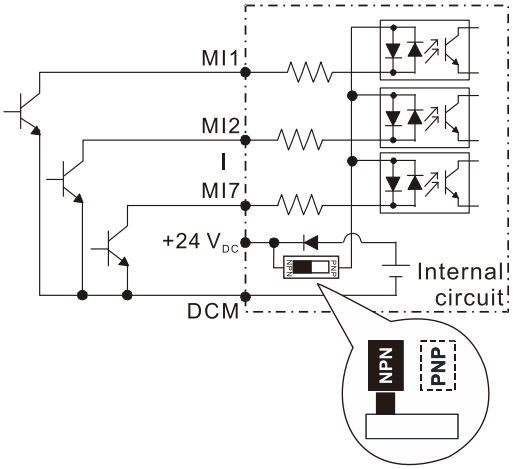

Figure 6-2

② Source Mode
with internal power (+24 V_{DC})

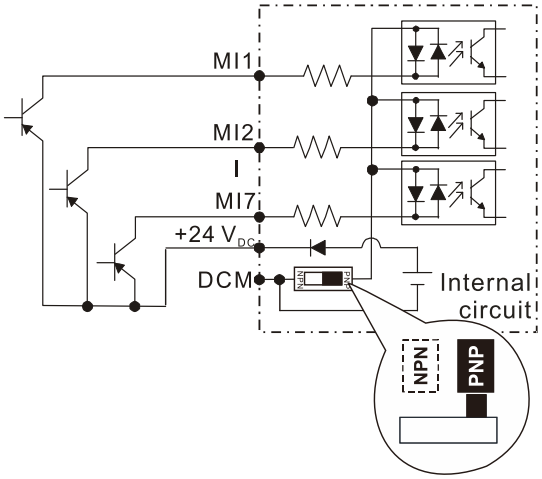

Figure 6-3

③ Sink Mode
with external power

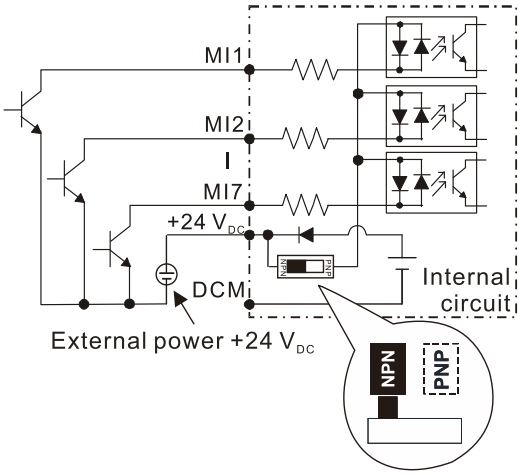

Figure 6-4

④ Source Mode
with external power

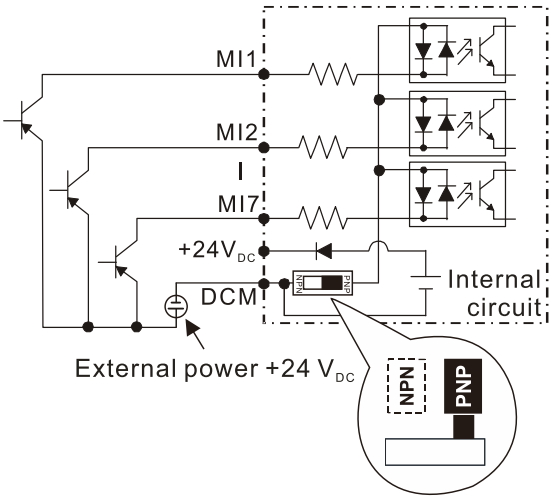

Figure 6-5

	☑ When the photo coupler uses the internal power supply, the switch connection for Sink and Source modes shows as Figure 6-2 and Figure 6-3: MI-DCM: Sink mode; MI-+24 V_{DC}: Source mode.
	Transistor output terminals (MO1, MO2, MCM)
	☑ Connect the digital outputs to the correct polarity. ☑ When connecting a relay to the digital outputs, connect a surge absorber across the coil and check the polarity.

6-1 Control Terminal Specifications

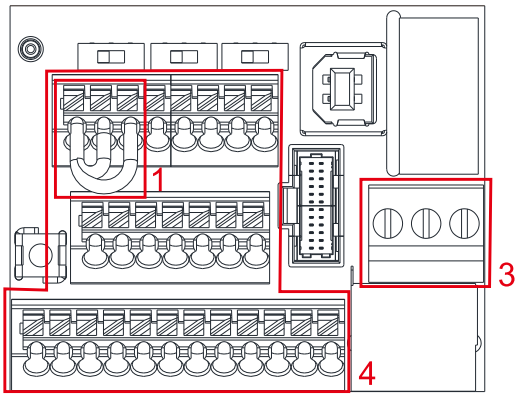

Figure 6-6 Control Terminal Distribution Diagram

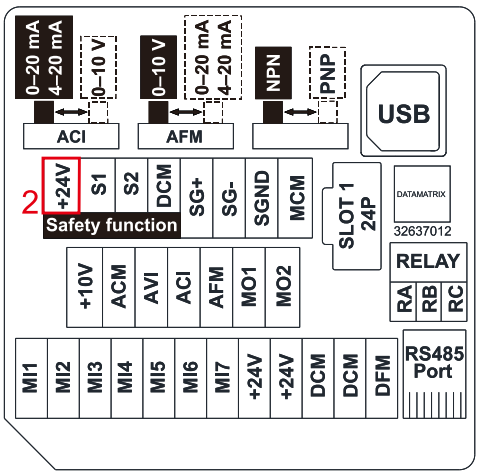

Figure 6-7 Control Terminal Location Diagram

Wiring precautions:

8. The factory default is +24 V_{DC} / S1 / S2 short-circuited by jumper, as shown in Area 1 in Figure 6-6. Refer to Figure 4-2 in Chapter 4 WIRING for details.
9. Use the +24 V_{DC} power supply of the safety function (as shown in Area 2 in Figure 6-7) for STO only. Do NOT use it for other purposes.
10. The RELAY terminal uses the PCB terminal block (as shown in Area 3 in Figure 6-6):
    - Tighten the wiring with a 2.5 mm (wide) × 0.4 mm (thick) slotted screwdriver.
    - The ideal length of stripped wire at the connection side is 9–10 mm.
    - When wiring bare wires, ensure that they are perfectly arranged to go through the wiring holes.
11. The Control terminal uses the push-in spring terminal block (as shown in Area 4 in Figure 6-6):
    - When using solid wire wires and crimp terminals for wiring, insert the wires and terminals directly into the middle of the wiring holes without pressing down the terminal handle.
    - When using stranded wire, it is recommended to crimp the terminals first (according to the specifications in Table 6-2) and then insert them into the middle of the wiring hole directly without pressing down the terminal handle.
    - If stranded wires are wired directly without crimping terminal, use the slotted screwdriver to press down the terminal first, and then place the wires neatly in the middle of the wiring hole to prevent the wires from spreading.
    - When removing wires, use the slotted screwdriver to press down the terminal, and the suggested force is 1.5 kgf. The specifications of the slotted screwdriver: 2.5 mm (wide) × 0.4 mm (thick).
    - The ideal length of stripped wire at the connection side is 9 mm.

Wiring Specifications of Control Terminal

Terminal Name	Wiring type	Stripping Length (mm)	Max. Wire Gauge	Min. Wire Gauge	Tightening Torque (±10%)
RELAY Terminals	Solid wire	6–7	1.5 mm^2 (16 AWG)	0.2 mm^2 (24 AWG)	5 Kg-cm (4.3 lb-in.) (0.49 Nm)
	Stranded wire				
Control Terminals	Solid wire	9	0.75 mm^2 (18 AWG)	0.2 mm^2 (24 AWG)	
	Stranded wire				
	Crimping terminal		0.5 mm^2 (20 AWG)		

Table 6-1

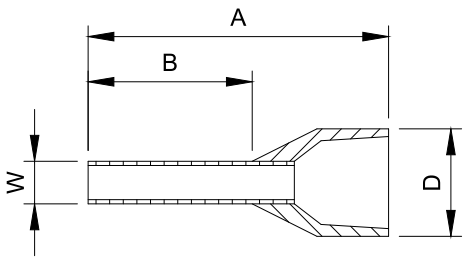

Figure 6-8

Recommended models or dimensions for crimping terminals Unit: mm

Wire Gauge	Manufacturer	Model Name	A (MAX)	B (MAX)	D (MAX)	W (MAX)
0.2 mm^2 (24 AWG)	PHOENIX CONTACT	AI 0,25- 8 YE	12.5	8	2.6	1.1
0.34 mm^2 (22 AWG)	PHOENIX CONTACT	AI 0,34- 8 TQ	12.5	8	3.3	1.3
0.5 mm^2 (20 AWG)	PHOENIX CONTACT	AI 0,5 - 8 WH	14	8	3.5	1.4
Recommended specifications and models for crimping tool: CRIMPFOX 10S - 1212045, Manufacturer: PHOENIX CONTACT DNT13-0101, Manufacturer: DINKLE						

Table 6-2

Terminals	Terminal Function	Description
+24 V	Digital control signal common (Source)	+24 V_{DC} ± 10 % 100 mA When used in parallel, if the +24V terminal is used with a feedback sensor, unequal current may occur, and there will be a risk of failure.
MI1 – MI7	Multi-function input 1–7	Refer to Pr.02-01–02-07 to program the multi-function inputs MI1–MI7. Source Mode ON: activation current is 3.3 mA and the voltage is 11 V_{DC} OFF: cut-off voltage ≤ 5 V_{DC} Sink Mode ON: activation current is 3.3 mA and the voltage is 13 V_{DC} OFF: cut-off voltage ≥ 19 V_{DC} ● When Pr.02-00 = 0, MI1 and MI2 can be programmed. ● When Pr.02-00 ≠ 0, the functions of MI1 and MI2 act according to Pr.02-00 setting. ● When Pr.02-07 = 0, MI7 is pulse input terminal. ● MI7 uses pulse input, and the maximum input frequency = 33 kHz. You can use it as frequency command source or connect it to the encoder for motor closed-loop control. ● MI7 motor closed-loop control only supports VFPG control mode.

Terminals	Terminal Function	Description
DFM	Digital frequency signal output	DFM uses pulse voltage as an output monitoring signal; Duty-cycle: 50% Min. load impedance R_L: 1 kΩ / 100 pF Max. current endurance: 30 mA Max. voltage: 30 V_{DC} ± 1 % (when 30 V_{DC} / 30 mA / RL=100 pF) Max. output frequency: 33 kHz Current-limiting resistor R: ≥ 1 KΩ
DCM	Digital control / Frequency signal common (Sink)	Output load impedance R_L Capacitive load ≤ 100 pF Resistive load ≥ 1 kΩ, resistance determines the output voltage value. DFM-DCM voltage = external voltage × (R_L ÷ (R_L+R)) 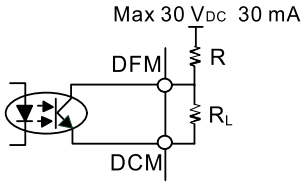 Figure 6-9
MO1	Multi-function Output 1 (photo coupler)	The AC motor drive outputs various monitoring signals, such as drive in operation, frequency reached, and overload indication through a transistor (open collector). Max. 48 V_{DC} 50 mA 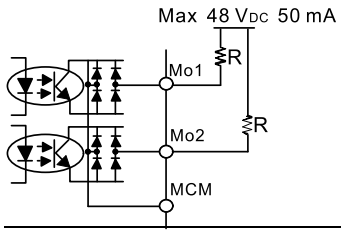 Figure 6-10
MO2	Multi-function Output 2 (photo coupler)	
MCM	Multi-function Output Common (photo coupler)	
RA	Multi-function relay output 1 (N.O.) a	Resistive Load 3 A (N.O.) / 3 A (N.C.) 250 V_{AC} 5 A (N.O.) / 3 A (N.C.) 30 V_{DC} Inductive Load (COS = 0.4) 1.2 A (N.O.) / 1.2 A (N.C.) 250 V_{AC} 2.0 A (N.O.) / 1.2 A (N.C.) 30 V_{DC} To output different kinds of monitoring signals such as motor drive in operation, frequency reached, and overload indication.
RB	Multi-function relay output 1 (N.C.) b	
RC	Multi-function relay common	
+10 V	Potentiometer power supply	Power supply for analog frequency setting: +10.5 ± 0.5 V_{DC} / 20 mA

Terminals	Terminal Function	Description
AVI	Analog voltage frequency command	Impedance: 20 kΩ Range: 0–10 V / -10–10 V = 0–Maximum Operation Frequency (Pr.01-00) Mode switching by setting Pr.03-28 AVI resolution = 11 bits (0–10 V) / 12 bits (-10–10 V) 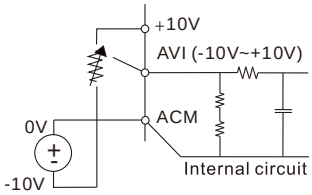 Figure 6-11 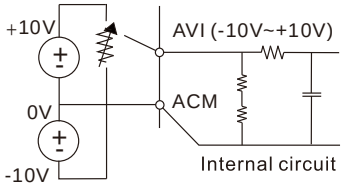 Figure 6-12
ACI	Analog current frequency command	Impedance: Current mode = 250 Ω, Voltage mode = 20 kΩ Range: 0–20 mA / 4–20 mA / 0–10 V = 0–Maximum Operation Frequency (Pr.01-00) Mode switching by setting Pr. 03-29 ACI resolution = 12 bits 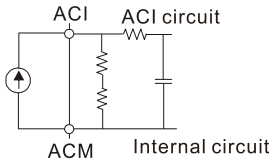 Figure 6-13
AFM	Multi-function analog voltage output	Switch: The AFM default is 0–10 V (voltage mode). To switch to the current mode, follow the instructions indicated on the inner side of the front cover or refer to page 2 of Chapter 6 in the user manual to switch AFM to the current mode position (0–20 mA / 4–20 mA) and set Pr.03-31. Voltage mode Range: 0–10 V (Pr.03-31 = 0) corresponds to the maximum operating range of the control target Max. output current: 2 mA Max. Load: 5 kΩ Current mode Range: 0–20 mA (Pr.03-31 = 1) / 4–20 mA (Pr.03-31 = 2) corresponds to the maximum operating range of the control target, maximum load 500 Ω AFM resolution=10 bits 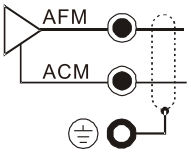 Figure 6-14
ACM	Analog Signal Common	Analog signal common terminal

Terminals	Terminal Function	Description
S1, S2	Default: S1/S2 short-circuited to +24 V_{DC} Rated voltage: 24 V_{DC} ± 10%; maximum voltage: 30 V_{DC} ± 10% Rated current: 6.67 mA ± 10% STO activation mode Input voltage level: 0 V_{DC} < S1-DCM < 5 V_{DC} or 0 V_{DC} < S2-DCM < 5 V_{DC}	
DCM	STO response time ≤ 20 ms (S1/S2 operates until the AC motor drive stops outputting current) STO cut-off mode Input voltage level: 11 V_{DC} < S1-DCM < 30 V_{DC} and 11 V_{DC} < S2-DCM < 30 V_{DC} Power removal safety function per EN 954-1 and IEC/EN 61508 **NOTE:** Refer to Chapter 17 SAFE TORQUE OFF FUNCTION for details.	
SG+	Modbus RS-485 **NOTE:** Refer to Chapter 12 DESCRIPTIONS OF PARAMETER SETTINGS parameter group 09 Communication Parameters for details.	
SG-		
SGND		
RJ45	PIN 1, 2, 6: Reserved PIN 5: SG+	PIN 3, 7: SGND PIN 8: +10 VS (provides KPC-CC01(optional) power supply)
		PIN 4: SG-

* Analog control signal wiring specification: 0.82 mm^2 (18 AWG) with shielded stranded wire.

Table 6-3

Chapter 7 Optional Accessories

7-1 Brake Resistors and Brake Units Used in AC Motor Drives

7-2 Magnetic Contactor / Air Circuit Breaker and Non-fuse Circuit Breaker

7-3 Fuse Specification Chart

7-4 AC / DC Reactor

7-5 Zero Phase Reactors

7-6 EMC Filter

7-7 EMC Shield Plate

7-8 Capacitive Filter

7-9 NEMA 1 / UL Type 1 Kit

7-10 Fan Kit

7-11 Keypad Panel Mounting

7-12 DIN-Rail Mounting

7-13 Mounting Adapter Plate

7-14 Digital Keypad - KPC-CC01

The optional accessories listed in this chapter are available upon request. Installing additional accessories to your drive substantially improves the drive's performance. Select accessories according to your need or contact your local distributor for suggestions.

7-1 Brake Resistors and Brake Units Used in AC Motor Drives

115V one-phase

Model	Applicable Motor		125% Braking Torque / 10% ED*1						Max. Braking Torque		
	HP	kW	Braking Torque*2 (kg-m)	Resistor Value Spec. for Each AC Motor Drive	Brake Resistor for Each Brake Unit			Braking Current (A)	Min. Resistor Value (Ω)	Max. Total Braking Current (A)	Peak Power (kW)
					Part No.*3	Q'ty	Usage				
VFD1A6MS11XNSAA	0.25	0.2	0.1	80W 750 Ω	BR080W750	1	-	0.5	190.0	2	0.8
VFD2A5MS11XNSAA	0.5	0.4	0.3	80W 200 Ω	BR080W200	1	-	1.9	95.0	4	1.5
VFD4A8MS11XNSAA	1	0.75	0.5	80W 200 Ω	BR080W200	1	-	1.9	63.3	6	2.3

Table 7-1

230V one-phase

Model	Applicable Motor		125% Braking Torque / 10% ED*1						Max. Braking Torque		
	HP	kW	Braking Torque*2 (kg-m)	Resistor Value Spec. for Each AC Motor Drive	Brake Resistor for each Brake Unit			Braking Current (A)	Min. Resistor Value (Ω)	Max. Total Braking Current (A)	Peak Power (kW)
					Part No.*3	Q'ty	Usage				
VFD1A6MS21XNSAA VFD1A6MS21AFSAA	0.25	0.2	0.1	80 W 750 Ω	BR080W750	1	-	0.5	190.0	2	0.8
VFD2A8MS21XNSAA VFD2A8MS21AFSAA	0.5	0.4	0.3	80 W 200 Ω	BR080W200	1	-	1.9	95.0	4	1.5
VFD4A8MS21XNSAA VFD4A8MS21AFSAA	1	0.75	0.5	80 W 200 Ω	BR080W200	1	-	1.9	63.3	6	2.3
VFD7A5MS21XNSAA VFD7A5MS21AFSAA	2	1.5	1	200 W 91 Ω	BR200W091	1	-	4.2	47.5	8	3.0
VFD11AMS21XNSAA VFD11AMS21AFSAA	3	2.2	1.5	300 W 70 Ω	BR300W070	1	-	5.4	38.0	10	3.8

Table 7-2

230V three-phase

Model	Applicable Motor		125% Braking Torque / 10% ED*1						Max. Braking Torque		
	HP	kW	Braking Torque*2 (kg-m)	Resistor Value Spec. for Each AC Motor Drive	Brake Resistor for each Brake Unit			Braking Current (A)	Min. Resistor Value (Ω)	Max. Total Braking Current (A)	Peak Power (kW)
					Part No.*3	Q'ty	Usage				
VFD1A6MS23XNSAA	0.25	0.2	0.1	80 W 750 Ω	BR080W750	1	-	0.5	190.0	2	0.8
VFD2A8MS23XNSAA	0.5	0.4	0.3	80 W 200 Ω	BR080W200	1	-	1.9	95.0	4	1.5
VFD4A8MS23XNSAA	1	0.75	0.5	80 W 200 Ω	BR080W200	1	-	1.9	63.3	6	2.3
VFD7A5MS23XNSAA	2	1.5	1	200 W 91 Ω	BR200W091	1	-	4.2	47.5	8	3.0
VFD11AMS23XNSAA	3	2.2	1.5	300 W 70 Ω	BR300W070	1	-	5.4	38.0	10	3.8
VFD17AMS23XNSAA	5	3.7/4	2.5	400 W 40 Ω	BR400W040	1	-	9.5	19.0	20	7.6
VFD25AMS23XNSAA	7.5	5.5	3.7	1000 W 20 Ω	BR1K0W020	1	-	19	16.5	23	8.7
VFD33AMS23XNSAA	10	7.5	5.1	1000 W 20 Ω	BR1K0W020	1	-	19	14.6	26	9.9
VFD49AMS23XNSAA	15	11	7.4	1500 W 13 Ω	BR1K5W013	1	-	29	12.6	29	11.0
VFD65AMS23XNSAA	20	15	10.2	2000 W 8.6 Ω	BR1K0W4P3	2	2 in series	44	8.3	46	17.5

Table 7-3

460V three-phase

Model	Applicable Motor		125% Braking Torque / 10% ED*1						Max. Braking Torque		
	HP	kW	Braking Torque*2 (kg-m)	Resistor Value Spec. for Each AC Motor Drive	Brake Resistor for each Brake Unit			Braking Current (A)	Min. Resistor Value (Ω)	Max. Total Braking Current (A)	Peak Power (kW)
					Part No.*3	Q'ty	Usage				
VFD1A5MS43XNSAA VFD1A5MS43AFSAA	0.5	0.4	0.3	80 W 750 Ω	BR080W750	1		1	380.0	2	1.5
VFD2A7MS43XNSAA VFD2A7MS43AFSAA	1	0.75	0.5	80 W 750 Ω	BR080W750	1		1	190.0	4	3.0
VFD4A2MS43XNSAA VFD4A2MS43AFSAA	2	1.5	1	200 W 360 Ω	BR200W360	1		2.1	126.7	6	4.6
VFD5A5MS43XNSAA VFD5A5MS43AFSAA	3	2.2	1.5	300 W 250 Ω	BR300W250	1		3	108.6	7	5.3
VFD7A3MS43XNSAA VFD7A3MS43ENSAA VFD7A3MS43AFSAA	4	3	2	400W 150Ω	BR400W150	1	2 in series	5.1	95.0	8	6.1
VFD9A0MS43XNSAA VFD9A0MS43AFSAA	5	3.7/4	2.5	400 W 150 Ω	BR400W150	1		5.1	84.4	9	6.8
VFD13AMS43XNSAA VFD13AMS43AFSAA	7.5	5.5	3.7	1000 W 75 Ω	BR1K0W075	1		10.2	50.7	15	11.4
VFD17AMS43XNSAA VFD17AMS43AFSAA	10	7.5	5.1	1000 W 75 Ω	BR1K0W075	1		10.2	40.0	19	14.4
VFD25AMS43XNSAA VFD25AMS43AFSAA	15	11	7.4	1500 W 43 Ω	BR1K5W043	1		17.6	33.0	23	17.5
VFD32AMS43XNSAA VFD32AMS43AFSAA	20	15	10.2	2000 W 32 Ω	BR1K0W016	2	2 in series	24	26.2	29	22.0
VFD38AMS43XNSAA VFD38AMS43AFSAA	25	18	12.2	2000 W 32 Ω	BR1K0W016	2	2 in series	24	26.2	29	22.0
VFD45AMS43XNSAA VFD45AMS43AFSAA	30	22	14.9	3000 W 26 Ω	BR1K5W013	2	2 in series	29	23.0	33	25.1

Table 7-4

575V three-phase

Model	Applicable Motor		125% Braking Torque / 10% ED*1						Max. Braking Torque		
	HP	kW	Braking Torque*2 (kg-m)	Resistor Value Spec. for Each AC Motor Drive	Brake Resistor for each Brake Unit			Braking Current (A)	Min. Resistor Value (Ω)	Max. Total Braking Current (A)	Peak Power (kW)
					Part No.*3	Q'ty	Usage				
VFD1A7MS53ANSAA	1	0.75	0.5	80W 750Ω	BR080W750	1	-	1.2	280.0	4	4.5
VFD3A0MS53ANSAA	2	1.5	1	200W 360Ω	BR200W360	1	-	2.6	186.7	6	6.7
VFD4A2MS53ANSAA	3	2.2	1.5	300W 400Ω	BR300W400	1	-	2.3	160.0	7	7.8
VFD6A6MS53ANSAA	5	3.7	2.5	500W 100Ω	BR500W100	1	-	9.2	93.3	12	13.4
VFD9A9MS53ANSAA	7.5	5.5	3.7	750W 140Ω	BR750W140	1	-	6.6	80.0	14	15.7
VFD12AMS53ANSAA	10	7.5	5.1	1000W 75Ω	BR1K0W075	1	-	12.3	70.0	16	17.9

Table 7-5

NOTE:

*1 Calculation for 125% brake torque: (kW) × 125% × 0.8; where 0.8 is motor efficiency.

Because of the limited resistor power, the longest operation time for 10% ED is 10 seconds (ON: 10 sec. / OFF: 90 sec.).

*2 The calculation of the brake resistor is based on a four-pole motor (1800 rpm).

*3 For heat dissipation, a resistors of 400 W or lower should be fixed to the frame and maintain the surface temperature below 250°C; a resistor of 1000 W and above should maintain the surface temperature below 350°C.

(If the surface temperature is higher than the temperature limit, install extra cooling or increase the size of the resistor.)

NOTE:

1. Select the resistance value, power and brake usage (ED %) according to Delta rules.

   Definition for Brake Usage ED%

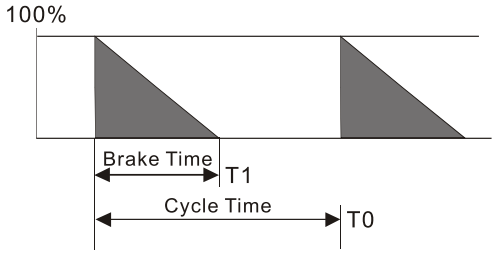

ED% = T1 / T0 x 100(%)

Explanation:
Brake usage ED (%) is the amount of time needed for the brake unit and brake resistor to dissipate heat generated by braking. When the brake resistor heats up, the resistance increases with temperature, and braking torque decreases accordingly.

Figure 7-1

For safety, install a thermal overload relay (O.L) between the brake unit and the brake resistor in conjunction with the magnetic contactor (MC) before the drive for additional protection. The thermal overload relay protects the brake resistor from damage due to frequent or continuous braking. Under such circumstances, turn off the power to prevent damage to the brake resistor, brake unit and drive.

NOTE: Never use it to disconnect the brake resistor.

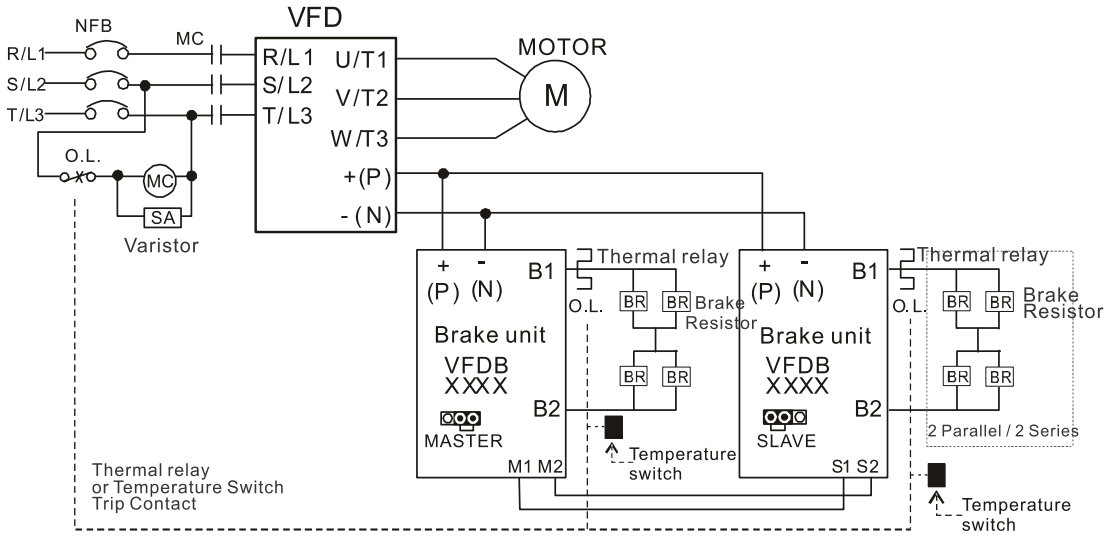

- When AC Drive is equipped with a DC reactor, please read user manual for the correct wiring for the brake unit input circuit +(P).
- DO NOT connect input circuit -(N) to the neutral point of the power system.

Figure 7-2

2. Any damage to the drive or other equipment caused by using brake resistors and brake modules that are not provided by Delta voids the warranty.
3. Consider environmental safety factors when installing the brake resistors. If you use the minimum resistance value, consult local dealers for the power calculation.
4. When using more than two brake units, the equivalent resistor value of the parallel brake unit cannot be less than the value in the column “Min. Resistor Value (Ω)”. Install the brake unit in an upright position and leave 150 mm (5.91 in.) above and below it for heat dissipation. Read the wiring information in the brake unit instruction sheet thoroughly prior to operation before use.

   Visit the following links to get the instruction sheets for the wiring in the brake unit:

- VFDB2015 / 2022 / 4030 / 4045 / 5055 Braking Modules Instruction Sheet
  https://downloadcenter.deltaww.com/downloadCenterCounter.aspx?DID=1525&DocPath=1&hl=en-US
- VFDB4110 / 4160 / 4185 Braking Modules Instruction Sheet
  https://downloadcenter.deltaww.com/downloadCenterCounter.aspx?DID=1516&DocPath=1&hl=en-US
- VFDB6055 / 6110 / 6160 / 6200 Braking Modules Instruction Sheet
  https://downloadcenter.deltaww.com/downloadCenterCounter.aspx?DID=8592&DocPath=1&hl=en-US

5. The selection tables are for normal usage. If the AC motor drive requires frequent braking, increase the Watts by two to three times.
6. Thermal Overload Relay (TOR):

   Thermal overload relay selection is based on its overload capacity. A standard braking capacity of the MS300 is 10% ED (Tripping time = 10 s). As shown in the figure below, a 460V, 1 kW MS300 required the thermal relay to take 260% overload capacity for 10 seconds (hot starting) and the braking current is 24A. In this case, select a thermal overload relay rated at 10 A (10 × 260% = 26 A > 24 A). The property of each thermal relay may vary among different manufacturers. Carefully read the specification before using it.

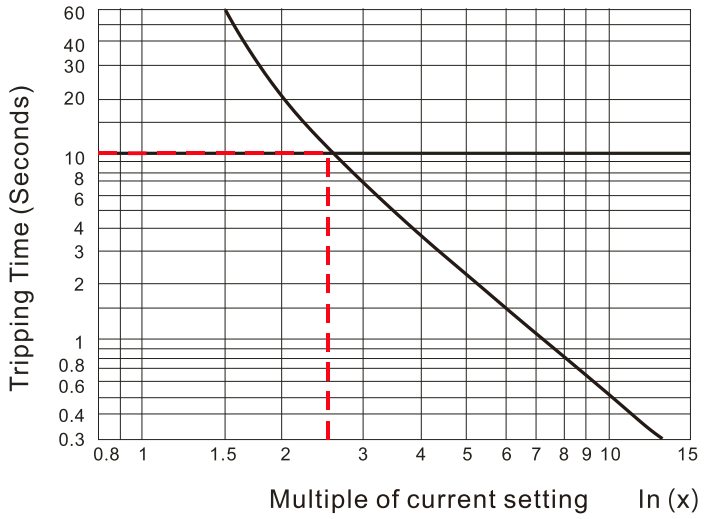

Figure 7-3

7-2 Magnetic Contactor / Air Circuit Breaker and Non-fuse Circuit Breaker

Magnetic Contactor (MC) and Air Circuit Breaker (ACB)

It is recommended the surrounding temperature for MC should be ≥ 60°C and for ACB should be ≥ 50°C. In the meanwhile, consider temperature derating for components with ON / OFF switch in accordance with the ambient temperature of the on-site distribution panel.

115V Models

Frame	Model	Heavy Duty Input Current (A)	Heavy Duty Output Current (A)	MC/ACB Selection (A)
A	VFD1A6MS11ANSAA	6	1.6	11
	VFD2A5MS11ANSAA	9.4	2.5	18
C	VFD4A8MS11ANSAA	18	4.8	32

Table 7-6

230V Models

Frame	Model	Heavy Duty Input Current (A)	Heavy Duty Output Current (A)	MC/ACB Selection (A)
A	VFD1A6MS21ANSAA	5.1	1.6	9
	VFD2A8MS21ANSAA	7.3	2.8	13
	VFD1A6MS23ANSAA	1.9	1.6	9
	VFD2A8MS23ANSAA	3.4	2.8	9
	VFD4A8MS23ANSAA	5.8	4.8	11
B	VFD1A6MS21AFSAA	5.1	1.6	9
	VFD2A8MS21AFSAA	7.3	2.8	13
	VFD4A8MS21AFSAA	10.8	4.8	18
	VFD4A8MS21ANSAA	10.8	4.8	18
	VFD7A5MS23ANSAA	9	7.5	18
C	VFD7A5MS21ANSAA	16.5	7.5	32
	VFD11AMS21ANSAA	24.2	11	40
	VFD7A5MS21AFSAA	16.5	7.5	32
	VFD11AMS21AFSAA	24.2	11	40
	VFD11AMS23ANSAA	13.2	11	22
	VFD17AMS23ANSAA	20.4	17	32
D	VFD25AMS23ANSAA	30	25	55
E	VFD33AMS23ANSAA	39.6	33	65
	VFD49AMS23ANSAA	58.8	49	105
F	VFD65AMS23ANSAA	78	65	130

Table 7-7

460V Models

Frame	Model	Heavy Duty Input Current (A)	Heavy Duty Output Current (A)	MC/ACB Selection (A)
A	VFD1A5MS43ANSAA	2.1	1.5	7
	VFD2A7MS43ANSAA VFD2A7MS43PNSAA	3.7	2.7	7

Frame	Model	Heavy Duty Input Current (A)	Heavy Duty Output Current (A)	MC/ACB Selection (A)
B	VFD4A2MS43ANSAA	5.8	4.2	9
	VFD1A5MS43AFSAA	2.1	1.5	7
	VFD2A7MS43AFSAA	3.7	2.7	7
	VFD4A2MS43AFSAA VFD4A2MS43PNSAA	5.8	4.2	9
C	VFD5A5MS43ANSAA	6.1	5.5	12
	VFD7A3MS43ANSAA	8.1	7.3	18
	VFD9A0MS43ANSAA	9.9	9	18
	VFD5A5MS43AFSAA VFD5A5MS43PNSAA	6.1	5.5	12
	VFD7A3MS43AFSAA VFD7A3MS43PNSAA	8.1	7.3	18
	VFD9A0MS43AFSAA VFD9A0MS43PNSAA	9.9	9	18
D	VFD13AMS43ANSAA	14.3	13	32
	VFD13AMS43AFSAA	14.3	13	32
	VFD17AMS43ANSAA	18.7	17	40
	VFD17AMS43AFSAA	18.7	17	40
E	VFD25AMS43ANSAA	27.5	25	50
	VFD32AMS43ANSAA	35.2	32	65
	VFD25AMS43AFSAA	27.5	25	50
	VFD32AMS43AFSAA	35.2	32	65
F	VFD38AMS43ANSAA	41.8	38	65
	VFD45AMS43ANSAA	49.5	45	75
	VFD38AMS43AFSAA	41.8	38	65
	VFD45AMS43AFSAA	49.5	45	75

Table 7-8

575V Models

Frame	Model	Heavy Duty Input Current (A)	Heavy Duty Output Current (A)	MC/ACB Selection (A)
A	VFD1A7MS53ANSAA	2	1.7	6
B	VFD3A0MS53ANSAA	3.5	3	6
C	VFD4A2MS53ANSAA	4.9	4.2	12
	VFD6A6MS53ANSAA	7.7	6.6	12
D	VFD9A9MS53ANSAA	11.5	9.9	20
	VFD12AMS53ANSAA	14.2	12.2	28

Table 7-9

Non-fuse Circuit Breaker

Comply with the UL standard: Per UL 508, paragraph 45.8.4, part a.

The rated current of the non-fuse circuit breaker should be 1.6–2.6 times the drive's rated input current. The recommended current values are shown in the table below. Compare the time characteristics of the non-fuse circuit breaker with those of the drive's overheated protection to ensure that there is no tripping.

Model	Voltage / One-phase (Three-phase)	Breaker Rated Input Recommended Current (A)
VFD1A6MS11ANSAA VFD1A6MS11ENSAA	115V / One-phase	20
VFD2A5MS11ANSAA VFD2A5MS11ENSAA		25
VFD4A8MS11ANSAA VFD4A8MS11ENSAA		50
VFD1A6MS21ANSAA VFD1A6MS21ENSAA VFD1A6MS21AFSAA	230V / One-phase	15
VFD2A8MS21ANSAA VFD2A8MS21ENSAA VFD2A8MS21AFSAA		20
VFD4A8MS21ANSAA VFD4A8MS21ENSAA VFD4A8MS21AFSAA		30
VFD7A5MS21ANSAA VFD7A5MS21ENSAA VFD7A5MS21AFSAA		45
VFD11AMS21ANSAA VFD11AMS21ENSAA VFD11AMS21AFSAA		70
VFD1A6MS23ANSAA VFD1A6MS23ENSAA	230V / Three-phase	15
VFD2A8MS23ANSAA VFD2A8MS23ENSAA		15
VFD4A8MS23ANSAA VFD4A8MS23ENSAA		15
VFD7A5MS23ANSAA VFD7A5MS23ENSAA		25
VFD11AMS23ANSAA VFD11AMS23ENSAA		40
VFD17AMS23ANSAA VFD17AMS23ENSAA		60
VFD25AMS23ANSAA VFD25AMS23ENSAA		63
VFD33AMS23ANSAA VFD33AMS23ENSAA		90
VFD49AMS23ANSAA VFD49AMS23ENSAA		125
VFD65AMS23ANSAA VFD65AMS23ENSAA		160

Model	Voltage / One-phase (Three-phase)	Breaker Rated Input Recommended Current (A)
VFD1A5MS43ANSAA VFD1A5MS43ENSAA VFD1A5MS43AFSAA	460V / Three-phase	15
VFD2A7MS43ANSAA VFD2A7MS43ENSAA VFD2A7MS43AFSAA VFD2A7MS43PNSAA		15
VFD4A2MS43ANSAA VFD4A2MS43ENSAA VFD4A2MS43AFSAA VFD4A2MS43PNSAA		15
VFD5A5MS43ANSAA VFD5A5MS43ENSAA VFD5A5MS43AFSAA VFD5A5MS43PNSAA		20
VFD7A3MS43ANSAA VFD7A3MS43ENSAA VFD7A3MS43AFSAA VFD7A3MS43PNSAA		25
VFD9A0MS43ANSAA VFD9A0MS43ENSAA VFD9A0MS43AFSAA VFD9A0MS43PNSAA		30
VFD13AMS43ANSAA VFD13AMS43ENSAA VFD13AMS43AFSAA		32
VFD17AMS43ANSAA VFD17AMS43ENSAA VFD17AMS43AFSAA		45
VFD25AMS43ANSAA VFD25AMS43ENSAA VFD25AMS43AFSAA		60
VFD32AMS43ANSAA VFD32AMS43ENSAA VFD32AMS43AFSAA		80
VFD38AMS43ANSAA VFD38AMS43ENSAA VFD38AMS43AFSAA		90
VFD45AMS43ANSAA VFD45AMS43ENSAA VFD45AMS43AFSAA		100
VFD1A7MS53ANSAA	575V / Three-phase	6
VFD3A0MS53ANSAA		10
VFD4A2MS53ANSAA		16
VFD6A6MS53ANSAA		25
VFD9A9MS53ANSAA		25
VFD12AMS53ANSAA		32

Table 7-10

7-3 Fuse Specification Chart

☑ Fuse specifications lower than the table below are allowed.

☑ For installation in the United States, branch circuit protection must be provided in accordance with the National Electrical Code (NEC) and any applicable local codes. Use UL classified fuses to fulfill this requirement.

☑ For installation in Canada, branch circuit protection must be provided in accordance with Canadian Electrical Code and any applicable provincial codes. Use UL classified fuses to fulfill this requirement.

Model	Voltage / One-phase (Three-phase)	Branch Circuit Fuses Specification (600 V_{AC})	
		Input Current (A)	P/N
VFD1A6MS11ANSAA VFD1A6MS11ENSAA	115V / One-phase	7.2	Class T JJS-10
VFD2A5MS11ANSAA VFD2A5MS11ENSAA		10.8	Class T JJS-10
VFD4A8MS11ANSAA VFD4A8MS11ENSAA		22	Class T JJS-25
VFD1A6MS21ANSAA VFD1A6MS21ENSAA VFD1A6MS21AFSAA	230V / One-phase	7.2	Class T JJS-10
VFD2A8MS21ANSAA VFD2A8MS21ENSAA VFD2A8MS21AFSAA		12.8	Class T JJS-15
VFD4A8MS21ANSAA VFD4A8MS21ENSAA VFD4A8MS21AFSAA		20	Class T JJS-20
VFD7A5MS21ANSAA VFD7A5MS21ENSAA VFD7A5MS21AFSAA		34	Class T JJS-35
VFD11AMS21ANSAA VFD11AMS21ENSAA VFD11AMS21AFSAA		50	Class T JJS-50
VFD1A6MS23ANSAA VFD1A6MS23ENSAA	230V / Three-phase	7.2	Class T JJS-10
VFD2A8MS23ANSAA VFD2A8MS23ENSAA		12.8	Class T JJS-15
VFD4A8MS23ANSAA VFD4A8MS23ENSAA		20	Class T JJS-20
VFD7A5MS23ANSAA VFD7A5MS23ENSAA		32	Class T JJS-35
VFD11AMS23ANSAA VFD11AMS23ENSAA		50	Class T JJS-50
VFD17AMS23ANSAA VFD17AMS23ENSAA		78	Class T JJS-80
VFD25AMS23ANSAA VFD25AMS23ENSAA		59.4	Class T JJS-60
VFD33AMS23ANSAA VFD33AMS23ENSAA		79.2	Class T JJS-80
VFD49AMS23ANSAA VFD49AMS23ENSAA		112.2	Class T JJS-110
VFD65AMS23ANSAA VFD65AMS23ENSAA		151.8	Class T JJS-150

Model	Voltage / One-phase (Three-phase)	Branch Circuit Fuses Specification (600 V_{AC})	
		Input Current (A)	P/N
VFD1A5MS43ANSAA VFD1A5MS43ENSAA VFD1A5MS43AFSAA	460V / Three-phase	7.2	Class T JJS-10
VFD2A7MS43ANSAA VFD2A7MS43ENSAA VFD2A7MS43AFSAA VFD2A7MS43PNSAA		12	Class T JJS-15
VFD4A2MS43ANSAA VFD4A2MS43ENSAA VFD4A2MS43AFSAA VFD4A2MS43PNSAA		18.4	Class T JJS-20
VFD5A5MS43ANSAA VFD5A5MS43ENSAA VFD5A5MS43AFSAA VFD5A5MS43PNSAA		26	Class T JJS-25
VFD7A3MS43ANSAA VFD7A3MS43ENSAA VFD7A3MS43AFSAA VFD7A3MS43PNSAA		35	Class T JJS-35
VFD9A0MS43ANSAA VFD9A0MS43ENSAA VFD9A0MS43AFSAA VFD9A0MS43PNSAA		42	Class T JJS-45
VFD13AMS43ANSAA VFD13AMS43ENSAA VFD13AMS43AFSAA		34.54	Class T JJS-35
VFD17AMS43ANSAA VFD17AMS43ENSAA VFD17AMS43AFSAA		45.1	Class T JJS-45
VFD25AMS43ANSAA VFD25AMS43ENSAA VFD25AMS43AFSAA		61.6	Class T JJS-60
VFD32AMS43ANSAA VFD32AMS43ENSAA VFD32AMS43AFSAA		79.2	Class T JJS-80
VFD38AMS43ANSAA VFD38AMS43ENSAA VFD38AMS43AFSAA		91.3	Class T JJS-90
VFD45AMS43ANSAA VFD45AMS43ENSAA VFD45AMS43AFSAA		107.8	Class T JJS-110
VFD1A7MS53ANSAA	575V / Three-phase	4.62	Class T JJS-6
VFD3A0MS53ANSAA		7.92	Class T JJS-10
VFD4A2MS53ANSAA		11	Class T JJS-10
VFD6A6MS53ANSAA		17.6	Class T JJS-20
VFD9A9MS53ANSAA		25.3	Class T JJS-25
VFD12AMS53ANSAA		33	Class T JJS-30

Table 7-11

7-4 AC / DC Reactor

7-4-1 AC Reactor

AC Input Reactor:

Installing an AC reactor on the input side of an AC motor drive can increase line impedance, improve the power factor, reduce input current, increase system capacity, and reduce interference generated from the motor drive. It also reduces momentary voltage surges or abnormal current spikes from the mains power, further protecting the drive. For example, when the main power capacity is higher than 500 kVA, or when using a phase-compensation capacitor, momentary voltage and current spikes may damage the AC motor drive's internal circuit. An AC reactor on the input side of the AC motor drive protects it by suppressing surges.

Install an AC input reactor in series between the main power and the three input phases R S T, as shown in the figure below:

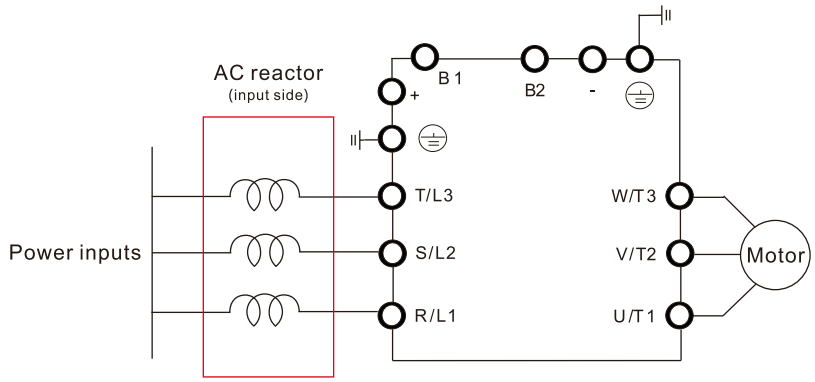

Figure 7-4

AC Output Reactor

When using drives in long wiring output application, ground fault (GFF), over-current (OC) and motor over-voltage (OV) often occur. GFF and OC cause errors due to the drive's self-protective mechanism; over-voltage damages motor insulation.

The excessive length of the output wires makes the grounded stray capacitance too large, increase the three-phase output common mode current, and the reflected wave of the long wires makes the motor dv / dt and the motor terminal voltage too high. Thus, installing a reactor on the drive's output side can increases the high-frequency impedance to reduce the dv / dt and terminal voltage to protect the motor.

Install an AC output reactor in series between the three output phases U V W and the motor, as shown in the figure below:

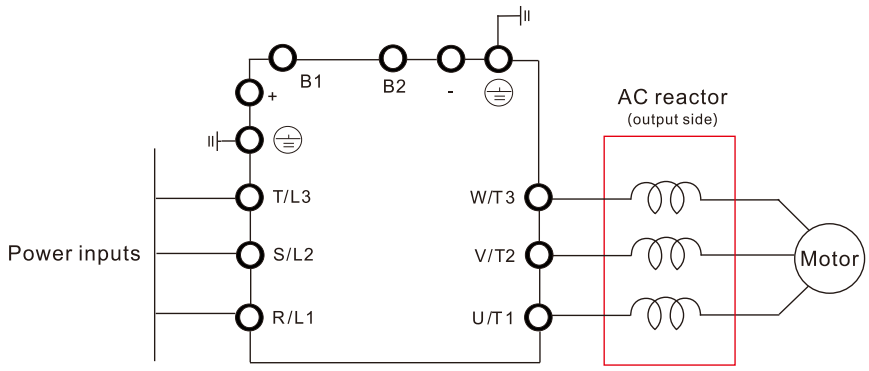

Figure 7-5

7-4-2 DC Reactor

A DC reactor can also increase line impedance, improve the power factor, reduce input current, increase system power, and reduce interference generated from the motor drive. A DC reactor stabilizes the DC bus voltage. Compared with an AC input reactor, a DC reactor is in smaller size, lower price, and lower voltage drop (lower power dissipation).

Install a DC reactor between terminals +1 and +2. Remove the jumper, as shown in the figure below, before installing a DC reactor.

NOTE: 115V models have no DC choke.

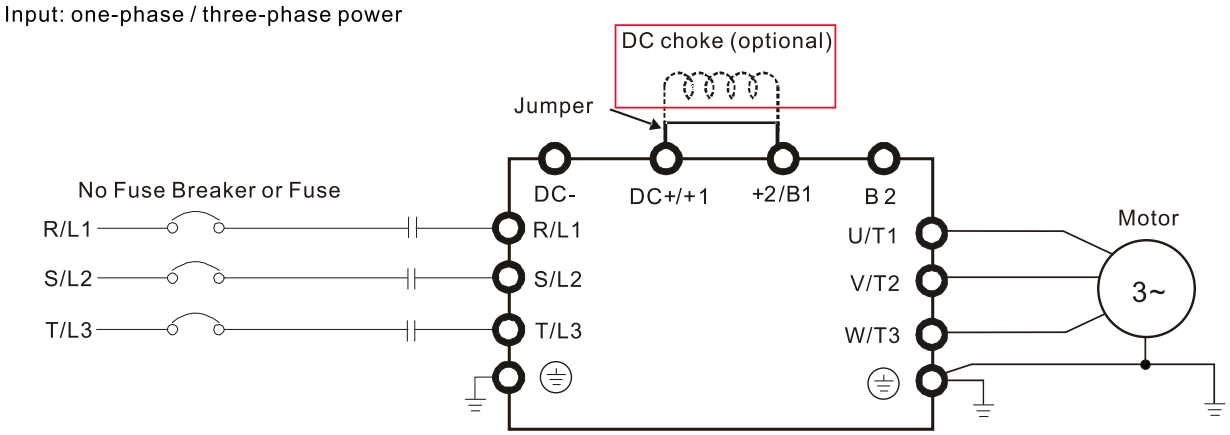

Figure 7-6

7-4-3 Applicable Reactors

115V, 50–60 Hz / One-phase - Normal Duty

Model	Rated Current (Arms)	Saturation Current (Arms)	Input / DC Reactor (mH)	AC Input / DC Reactor		Output Reactor (mH)	AC Output Reactor	
				Delta Part #	Weight (kg)		Delta Part #	Weight (kg)
VFD1A6MS11ANSAA VFD1A6MS11ENSAA	1.8	2.7	3.66	DR008D0366	0.8	2.54	DR005L0254	1.5
VFD2A5MS11ANSAA VFD2A5MS11ENSAA	2.7	4.05	2.66	DR011D0266	1.2	2.54	DR005L0254	1.5
VFD4A8MS11ANSAA VFD4A8MS11ENSAA	5.5	8.25	1.17	DR025D0117	2.8	1.59	DR008L0159	2.5

Table 7-12

115V, 50–60 Hz / One-phase - Heavy Duty

Model	Rated Current (Arms)	Saturation Current (Arms)	Input / DC Reactor (mH)	AC Input / DC Reactor		Output Reactor (mH)	AC Output Reactor	
				Delta Part #	Weight (kg)		Delta Part #	Weight (kg)
VFD1A6MS11ANSAA VFD1A6MS11ENSAA	1.6	3.2	3.66	DR008D0366	0.8	2.54	DR005L0254	1.5
VFD2A5MS11ANSAA VFD2A5MS11ENSAA	2.5	5	2.66	DR011D0266	1.2	2.54	DR005L0254	1.5
VFD4A8MS11ANSAA VFD4A8MS11ENSAA	5	9.6	1.17	DR025D0117	2.8	2.54	DR005L0254	1.5

Table 7-13

230V, 50–60 Hz / One-phase - Normal Duty

Model	Rated Current (Arms)	Saturation Current (Arms)	Input / DC Reactor (mH)	AC Input / DC Reactor		Output Reactor (mH)	AC Output Reactor	
				Delta Part #	Weight (kg)		Delta Part #	Weight (kg)
VFD1A6MS21ANSAA VFD1A6MS21ENSAA VFD1A6MS21AFSAA	1.8	2.7	5.857	DR005D0585	0.8	2.54	DR005L0254	1.5
VFD2A8MS21ANSAA VFD2A8MS21ENSAA VFD2A8MS21AFSAA	3.2	4.8	3.66	DR008D0366	0.8	2.54	DR005L0254	1.5
VFD4A8MS21ANSAA VFD4A8MS21ENSAA VFD4A8MS21AFSAA	5	7.5	2.66	DR011D0266	1.2	2.54	DR005L0254	1.5
VFD7A5MS21ANSAA VFD7A5MS21ENSAA VFD7A5MS21AFSAA	8.5	12.75	1.72	DR017D0172	1.9	1.15	DR011L0115	3.0
VFD11AMS21ANSAA VFD11AMS21ENSAA VFD11AMS21AFSAA	12.5	18.75	1.17	DR025D0117	2.8	0.746	DR017LP746	3.6

Table 7-14

230V, 50–60 Hz / One-phase - Heavy Duty

Model	Rated Current (Arms)	Saturation Current (Arms)	Input / DC Reactor (mH)	AC Input / DC Reactor		Output Reactor (mH)	AC Output Reactor	
				Delta Part #	Weight (kg)		Delta Part #	Weight (kg)
VFD1A6MS21ANSAA VFD1A6MS21ENSAA VFD1A6MS21AFSAA	1.6	3.2	5.857	DR005D0585	0.8	2.54	DR005L0254	1.5
VFD2A8MS21ANSAA VFD2A8MS21ENSAA VFD2A8MS21AFSAA	2.8	5.6	3.66	DR008D0366	0.8	2.54	DR005L0254	1.5
VFD4A8MS21ANSAA VFD4A8MS21ENSAA VFD4A8MS21AFSAA	4.8	9.6	2.66	DR011D0266	1.2	2.54	DR005L0254	1.5
VFD7A5MS21ANSAA VFD7A5MS21ENSAA VFD7A5MS21AFSAA	7.5	15	1.72	DR017D0172	1.9	1.59	DR008L0159	2.5
VFD11AMS21ANSAA VFD11AMS21ENSAA VFD11AMS21AFSAA	11	22	1.17	DR025D0117	2.8	1.15	DR011L0115	3.0

Table 7-15

230V, 50–60 Hz / Three-phase - Normal Duty

Model	Rated Current (Arms)	Saturation Current (Arms)	Input / Output Reactor (mH)	AC Input Reactor		AC Output Reactor		DC Reactor (mH)	DC Reactor Delta Part #
				Delta Part #	Weight (kg)	Delta Part #	Weight (kg)		
VFD1A6MS23ANSAA VFD1A6MS23ENSAA	1.8	2.7	2.536	DR005A0254	1.2	DR005L0254	1.5	5.857	DR005D0585
VFD2A8MS23ANSAA VFD2A8MS23ENSAA	3.2	4.8	2.536	DR005A0254	1.2	DR005L0254	1.5	5.857	DR005D0585
VFD4A8MS23ANSAA VFD4A8MS23ENSAA	5	7.5	2.536	DR005A0254	1.2	DR005L0254	1.5	5.857	DR005D0585
VFD7A5MS23ANSAA VFD7A5MS23ENSAA	8	12	1.585	DR008A0159	1.7	DR008L0159	2.5	3.66	DR008D0366
VFD11AMS23ANSAA VFD11AMS23ENSAA	12.5	18.75	0.746	DR017AP746	3.2	DR017LP746	3.6	2.662	DR011D0266
VFD17AMS23ANSAA VFD17AMS23ENSAA	19.5	29.25	0.507	DR025AP507	3.8	DR025LP507	5.5	1.722	DR017D0172
VFD25AMS23ANSAA VFD25AMS23ENSAA	27	40.5	0.32	DR033AP320	4.5	DR033LP320	6.5	1.172	DR025D0117
VFD33AMS23ANSAA VFD33AMS23ENSAA	36	54	0.216	DR049AP215	6.5	DR049LP215	8.6	0.851	DR033DP851

Model	Rated Current (Arms)	Saturation Current (Arms)	Input / Output Reactor (mH)	AC Input Reactor		AC Output Reactor		DC Reactor (mH)	DC Reactor Delta Part #
				Delta Part #	Weight (kg)	Delta Part #	Weight (kg)		
VFD49AMS23ANSAA VFD49AMS23ENSAA	51	76.5	0.216	DR049AP215	6.5	DR049LP215	8.6	0.574	DR049DP574
VFD65AMS23ANSAA VFD65AMS23ENSAA	69	103.5	0.169	DR075AP170	10	DR075LP170	14.5	0.432	DR065DP432

Table 7-16

230V, 50–60 Hz / Three-phase - Heavy Duty

Model	Rated Current (Arms)	Saturation Current (Arms)	Input / Output Reactor (mH)	AC Input Reactor		AC Output Reactor		DC Reactor (mH)	DC Reactor Delta Part #
				Delta Part #	Weight (kg)	Delta Part #	Weight (kg)		
VFD1A6MS23ANSAA VFD1A6MS23ENSAA	1.6	3.2	2.536	DR005A0254	1.2	DR005L0254	1.5	5.857	DR005D0585
VFD2A8MS23ANSAA VFD2A8MS23ENSAA	2.8	5.6	2.536	DR005A0254	1.2	DR005L0254	1.5	5.857	DR005D0585
VFD4A8MS23ANSAA VFD4A8MS23ENSAA	4.8	9.6	2.536	DR005A0254	1.2	DR005L0254	1.5	5.857	DR005D0585
VFD7A5MS23ANSAA VFD7A5MS23ENSAA	7.5	15	1.585	DR008A0159	1.7	DR008L0159	2.5	3.66	DR008D0366
VFD11AMS23ANSAA VFD11AMS23ENSAA	11	22	1.152	DR011A0115	2.5	DR011L0115	3.0	2.662	DR011D0266
VFD17AMS23ANSAA VFD17AMS23ENSAA	17	34	0.746	DR017AP746	3.2	DR017LP746	3.6	1.722	DR017D0172
VFD25AMS23ANSAA VFD25AMS23ENSAA	25	50	0.507	DR025AP507	3.8	DR025LP507	5.5	1.172	DR025D0117
VFD33AMS23ANSAA VFD33AMS23ENSAA	33	66	0.32	DR033AP320	4.5	DR033LP320	6.5	0.851	DR033DP851
VFD49AMS23ANSAA VFD49AMS23ENSAA	46	92	0.216	DR049AP215	6.5	DR049LP215	8.6	0.574	DR049DP574
VFD65AMS23ANSAA VFD65AMS23ENSAA	65	130	0.163	DR065AP162	8.5	DR065LP162	12	0.432	DR065DP432

Table 7-17

460V, 50–60 Hz / Three-phase - Normal Duty

Model	Rated Current (Arms)	Saturation Current (Arms)	Input / Output Reactor (mH)	AC Input Reactor		AC Output Reactor		DC Reactor (mH)	DC Reactor Delta Part #
				Delta Part #	Weight (kg)	Delta Part #	Weight (kg)		
VFD1A5MS43ANSAA VFD1A5MS43ENSAA VFD1A5MS43AFSAA	1.8	2.7	8.102	DR003A0810	1.5	DR003L0810	1.5	18.709	DR003D1870
VFD2A7MS43ANSAA VFD2A7MS43ENSAA VFD2A7MS43AFSAA VFD2A7MS43PNSAA	3	4.5	6.077	DR004A0607	1.8	DR004L0607	2.5	18.709	DR003D1870
VFD4A2MS43AFSAA VFD4A2MS43ANSAA VFD4A2MS43ENSAA VFD4A2MS43PNSAA	4.6	6.9	4.05	DR006A0405	2.8	DR006L0405	3.0	14.031	DR004D1403
VFD5A5MS43AFSAA VFD5A5MS43ANSAA VFD5A5MS43ENSAA VFD5A5MS43PNSAA	6.5	9.75	2.7	DR009A0270	3.5	DR009L0270	3.6	9.355	DR006D0935
VFD7A3MS43ANSAA VFD7A3MS43ENSAA VFD7A3MS43AFSAA VFD7A3MS43PNSAA	8.9	13.35	2.7	DR009A0270	3.5	DR009L0270	3.6	6.236	DR009D0623
VFD9A0MS43AFSAA VFD9A0MS43ANSAA VFD9A0MS43ENSAA VFD9A0MS43PNSAA	10.5	15.75	2.315	DR010A0231	4.5	DR010L0231	5.5	5.345	DR010D0534

Model	Rated Current (Arms)	Saturation Current (Arms)	Input / Output Reactor (mH)	AC Input Reactor		AC Output Reactor		DC Reactor (mH)	DC Reactor Delta Part #
				Delta Part #	Weight (kg)	Delta Part #	Weight (kg)		
VFD13AMS43AFSAA VFD13AMS43ANSAA VFD13AMS43ENSAA	15.7	23.55	1.174	DR018A0117	5.3	DR018L0117	6.4	3.119	DR018D0311
VFD17AMS43AFSAA VFD17AMS43ANSAA VFD17AMS43ENSAA	20.5	30.75	0.881	DR024AP881	5.8	DR024LP881	7.2	3.119	DR018D0311
VFD25AMS43AFSAA VFD25AMS43ANSAA VFD25AMS43ENSAA	28	42	0.66	DR032AP660	9	DR032LP660	11	2.338	DR024D0233
VFD32AMS43AFSAA VFD32AMS43ANSAA VFD32AMS43ENSAA	36	54	0.639	DR038AP639	9.5	DR038LP639	12	1.754	DR032D0175
VFD38AMS43AFSAA VFD38AMS43ANSAA VFD38AMS43ENSAA	41.5	62.25	0.541	DR045AP541	10.5	DR045LP541	16	1.477	DR038D0147
VFD45AMS43AFSAA VFD45AMS43ANSAA VFD45AMS43ENSAA	49	73.5	0.405	DR060AP405	11.5	DR060LP405	18	1.247	DR045D0124

Table 7-18

460V, 50–60 Hz / Three-phase - Heavy Duty

Model	Rated Current (Arms)	Saturation Current (Arms)	Input / Output Reactor (mH)	AC Input Reactor		AC Output Reactor		DC Reactor (mH)	DC Reactor Delta Part #
				Delta Part #	Weight (kg)	Delta Part #	Weight (kg)		
VFD1A5MS43ANSAA VFD1A5MS43ENSAA VFD1A5MS43AFSAA	1.5	3	8.102	DR003A0810	1.5	DR003L0810	1.5	18.709	DR003D1870
VFD2A7MS43ANSAA VFD2A7MS43ENSAA VFD2A7MS43AFSAA VFD2A7MS43PNSAA	2.7	5.4	8.102	DR003A0810	1.5	DR003L0810	1.5	18.709	DR003D1870
VFD4A2MS43AFSAA VFD4A2MS43ANSAA VFD4A2MS43ENSAA VFD4A2MS43PNSAA	4.2	8.4	6.077	DR004A0607	1.8	DR004L0607	2.5	14.031	DR004D1403
VFD5A5MS43AFSAA VFD5A5MS43ANSAA VFD5A5MS43ENSAA VFD5A5MS43PNSAA	5.5	11	4.05	DR006A0405	2.8	DR006L0405	3.0	9.355	DR006D0935
VFD7A3MS43ANSAA VFD7A3MS43ENSAA VFD7A3MS43AFSAA VFD7A3MS43PNSAA	8.1	16.2	2.7	DR009A0270	3.5	DR009L0270	3.6	6.236	DR009D0623
VFD9A0MS43AFSAA VFD9A0MS43ANSAA VFD9A0MS43ENSAA VFD9A0MS43PNSAA	9	18	2.7	DR009A0270	3.5	DR009L0270	3.6	6.236	DR009D0623
VFD13AMS43AFSAA VFD13AMS43ANSAA VFD13AMS43ENSAA	13	26	1.174	DR018A0117	5.3	DR018L0117	6.4	4.677	DR012D0467
VFD17AMS43AFSAA VFD17AMS43ANSAA VFD17AMS43ENSAA	17	34	1.174	DR018A0117	5.3	DR018L0117	6.4	3.119	DR018D0311
VFD25AMS43AFSAA VFD25AMS43ANSAA VFD25AMS43ENSAA	25	50	0.881	DR024AP881	5.8	DR024LP881	7.2	2.338	DR024D0233
VFD32AMS43AFSAA VFD32AMS43ANSAA VFD32AMS43ENSAA	32	64	0.66	DR032AP660	9	DR032LP660	11	1.754	DR032D0175
VFD38AMS43AFSAA VFD38AMS43ANSAA VFD38AMS43ENSAA	38	76	0.639	DR038AP639	9.5	DR038LP639	12	1.477	DR038D0147

Model	Rated Current (Arms)	Saturation Current (Arms)	Input / Output Reactor (mH)	AC Input Reactor		AC Output Reactor		DC Reactor (mH)	DC Reactor Delta Part #
				Delta Part #	Weight (kg)	Delta Part #	Weight (kg)		
VFD45AMS43AFSAA VFD45AMS43ANSAA VFD45AMS43ENSAA	45	90	0.541	DR045AP541	10.5	DR045LP541	16	1.247	DR045D0124

Table 7-19

575V, 50–60 Hz / Three-phase - Normal Duty

Model	Rated Current (Arms)	Saturation Current (Arms)	AC Reactor (mH)	DC Reactor (mH)
VFD1A7MS53ANSAA	2.1	3.15	13.13	17.50
VFD3A0MS53ANSAA	3.6	5.4	7.66	10.21
VFD4A2MS53ANSAA	5	7.5	5.51	7.35
VFD6A6MS53ANSAA	8	12	3.45	4.59
VFD9A9MS53ANSAA	11.5	17.25	2.40	3.20
VFD12AMS53ANSAA	15	22.5	1.84	2.45

Table 7-20

575V, 50–60 Hz / Three-phase - Heavy Duty

Model	Rated Current (Arms)	Saturation Current (Arms)	AC Reactor (mH)	DC Reactor (mH)
VFD1A7MS53ANSAA	1.7	3.4	16.22	37.45
VFD3A0MS53ANSAA	3	6	9.19	21.22
VFD4A2MS53ANSAA	4.2	8.4	6.56	15.16
VFD6A6MS53ANSAA	6.6	13.2	4.18	9.65
VFD9A9MS53ANSAA	9.9	19.8	2.78	6.43
VFD12AMS53ANSAA	12.2	24.4	2.26	5.22

Table 7-21

The table below shows the THDi specification when using Delta's drives to work with AC/DC reactors.

Drive Spec.	Models without Built-in DC Reactors			
Reactor Spec.	No AC/DC Reactor	3% Input AC Reactor	5% Input AC Reactor	4% DC Reactor
5th	73.3%	38.5%	30.8%	34.4%
7th	52.74%	15.3%	9.4%	18.6%
11th	7.28%	7.1%	6.13%	7.14%
13th	0.4%	3.75%	3.15%	3.41%
THDi	91%	43.6%	34.33%	38.2%
NOTE	The THDi specification listed here assumes that there is 0.8% resistance (mains electricity) before the reactors and may be slightly different from the actual THDi, depending on the installation and environmental conditions (wires, motors).			

Table 7-22

7-4-4 Reactor Dimension and Specifications

AC Input Reactor:

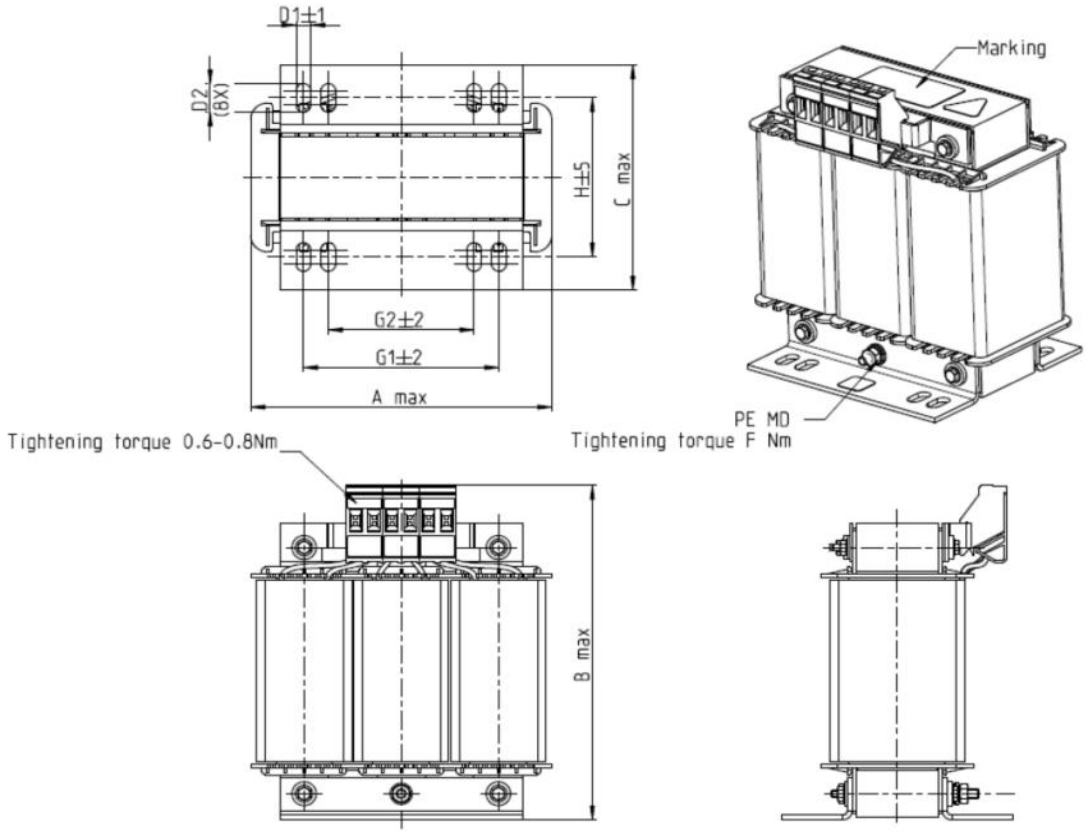

Figure 7-7

Unit: mm

AC Input Reactors Delta Part #	A	B	C	D1*D2	E	G1	G2	PE D
DR005A0254	100	115	65	6*9	45	60	40	M4
DR008A0159	100	115	65	6*9	45	60	40	M4
DR011A0115	130	135	95	6*12	60	80.5	60	M4
DR017AP746	130	135	100	6*12	65	80.5	60	M4

Table 7-23

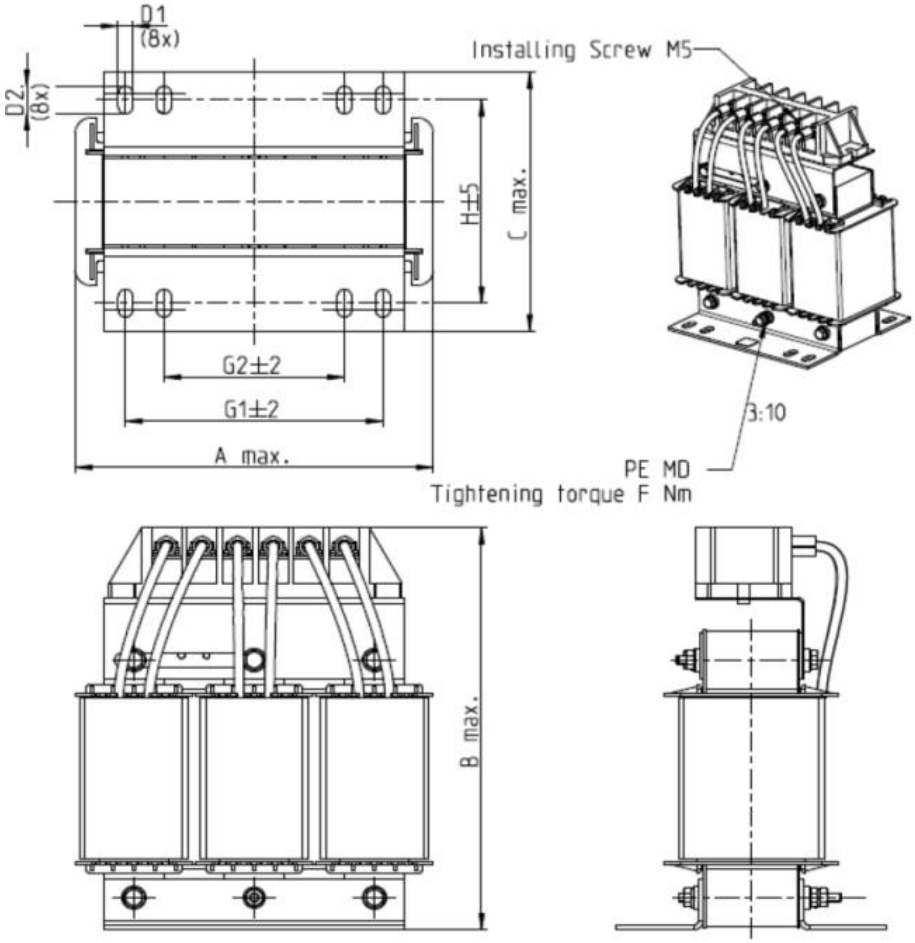

Figure 7-8

Unit: mm

AC Input Reactors Delta Part #	A	B	C	D1*D2	H	G1	G2	PE D
DR025AP215	130	195	100	6*12	65	80.5	60	M4
DR033AP163	130	195	100	6*12	65	80.5	60	M4
DR049AP163	160	200	125	6*12	90	107	75	M4

Table 7-24

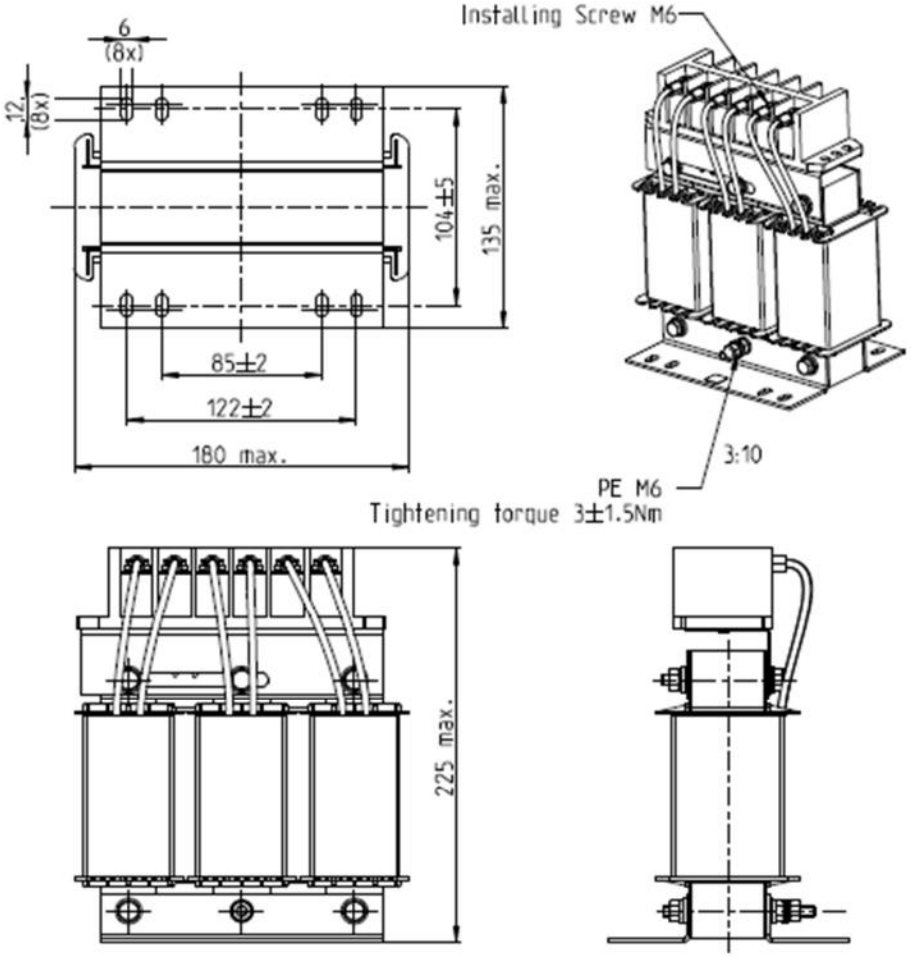

Figure 7-9

Unit: mm

AC Input Reactor Delta Part #	Dimensions
DR065AP162	As shown in the figures above

Table 7-25

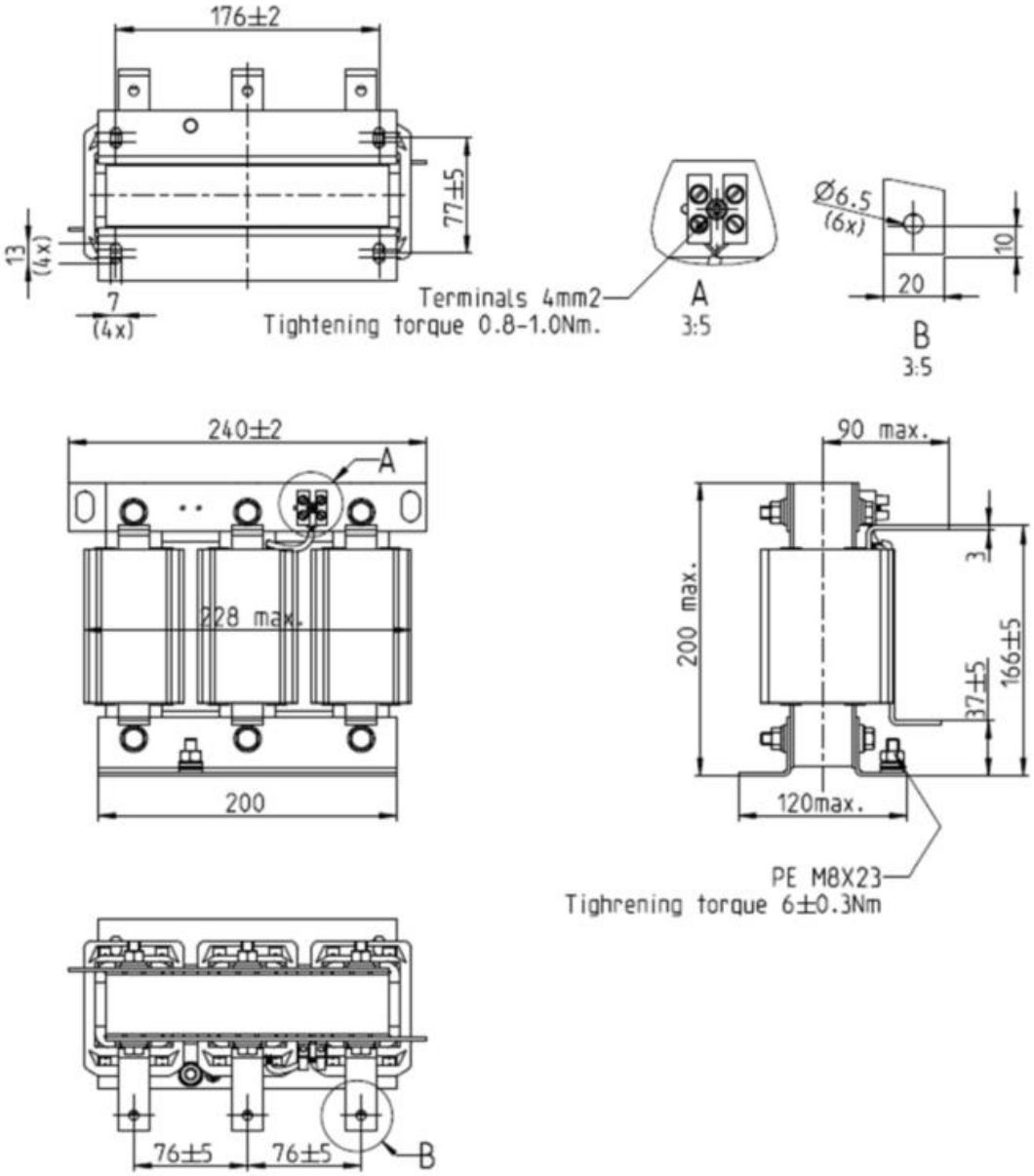

Figure 7-10

Unit: mm

AC Input Reactor Delta Part #	Dimensions
DR075AP170	As shown in the figures above

Table 7-26

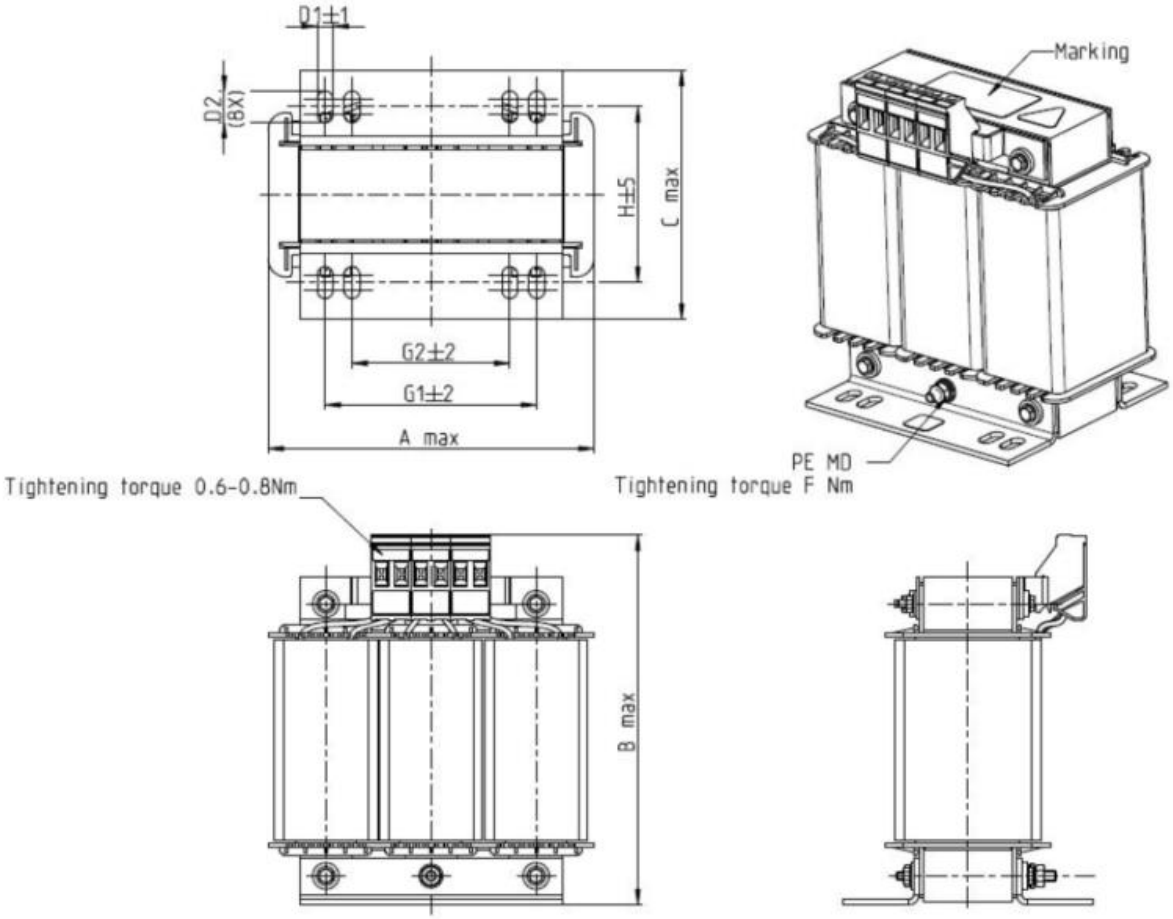

Figure 7-11

Unit: mm

AC Input Reactors Delta Part #	A	B	C	D1*D2	H	G1	G2	PE D
DR003A0810	100	125	65	6*9	43	60	40	M4
DR004A0607	100	125	65	6*9	43	60	40	M4
DR006A0405	130	15	95	6*12	60	80.5	60	M4
DR009A0270	160	160	105	6*12	75	107	75	M4
DR010A0231	160	160	115	6*12	90	107	75	M4
DR012A0202	160	160	115	6*12	90	107	75	M4
DR018A0117	160	160	115	6*12	90	107	75	M4

Table 7-27

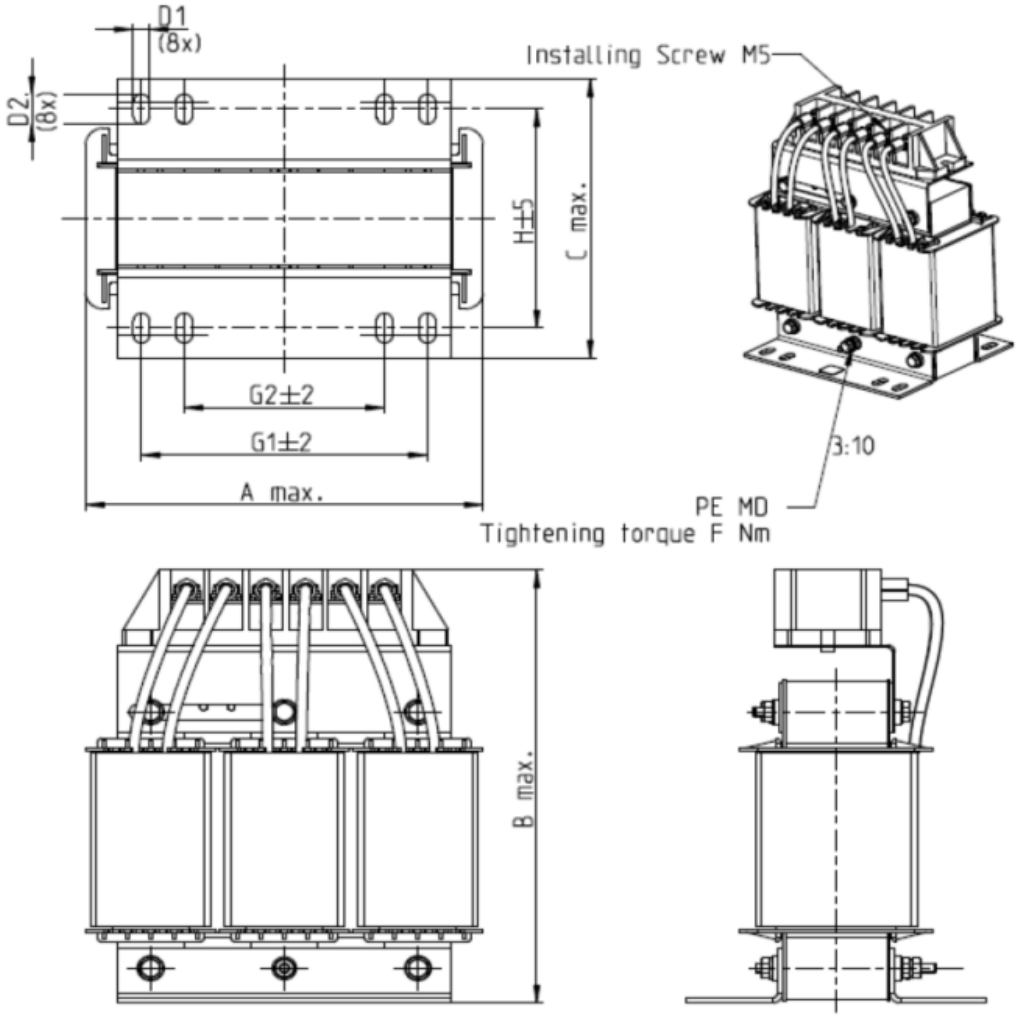

Figure 7-12

Unit: mm

AC Input Reactors Delta Part #	A	B	C	D1*D2	H	G1	G2	PE D
DR024AP881	160	175	115	6*12	90	107	75	M4
DR032AP660	195	200	145	6*12	115	122	85	M6
DR038AP639	190	200	145	6*12	115	122	85	M6
DR045AP541	190	200	145	6*12	115	122	85	M6

Table 7-28

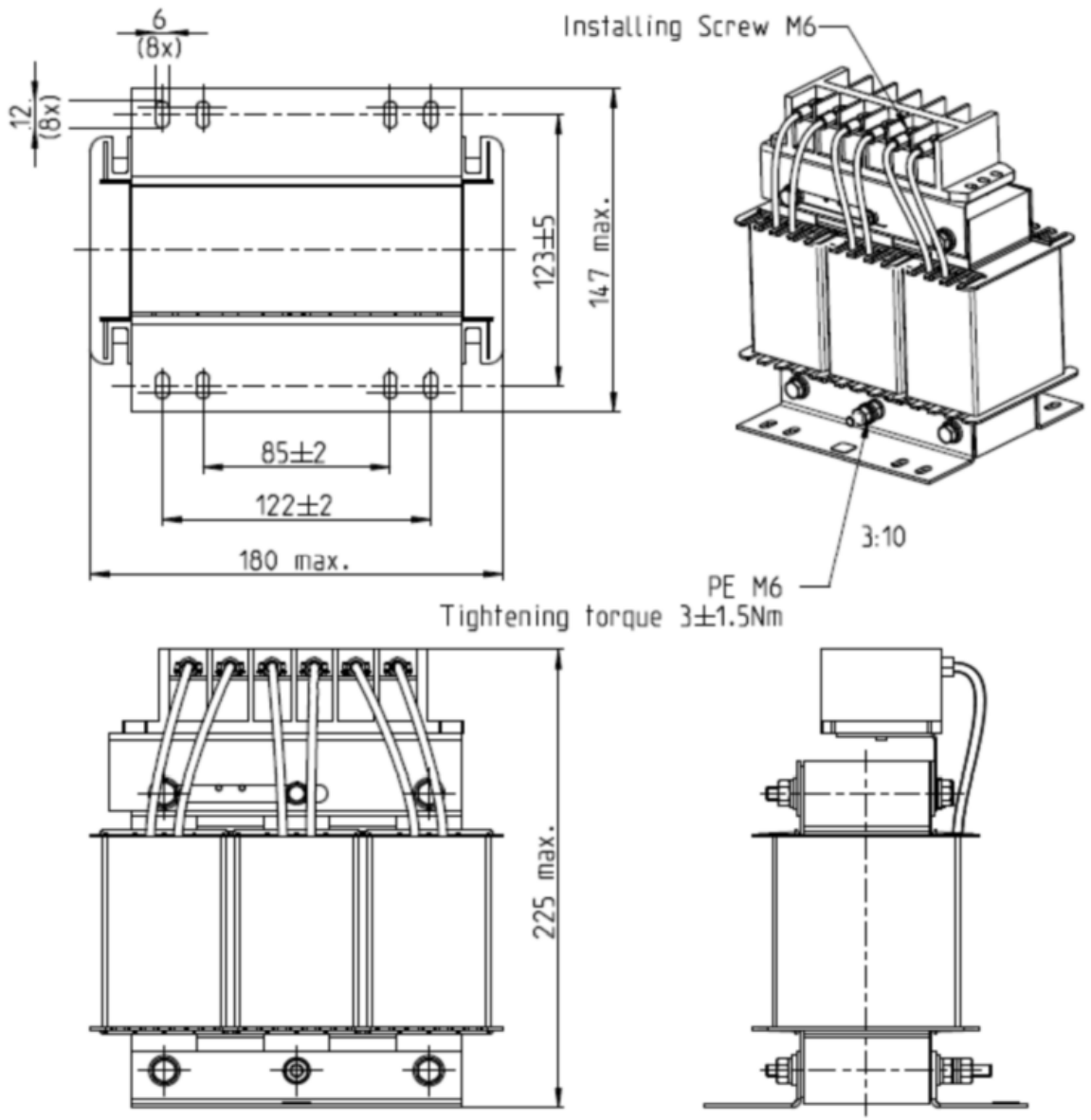

Figure 7-13

Unit: mm

AC Input Reactor Delta Part #	Dimensions
DR060AP405	As shown in the figures above

Table 7-29

AC Output Reactor:

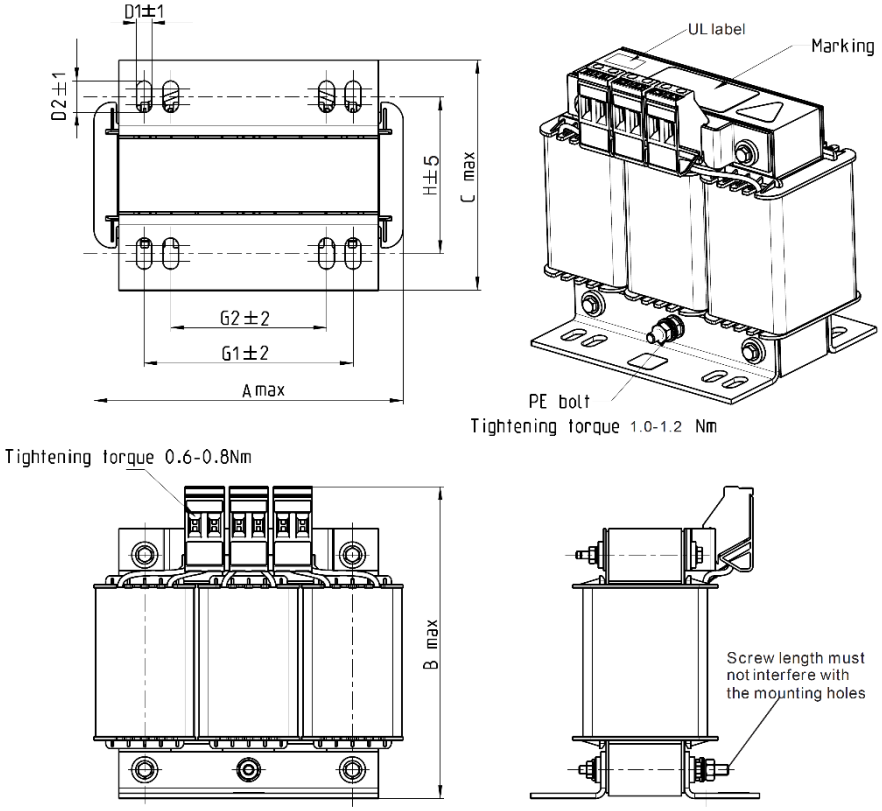

Figure 7-14

Unit: mm

AC Output Reactors Delta Part #	A	B	C	D1*D2	E	G1	G2	PE D
DR005L0254	96	110	70	6*9	42	60	40	M4
DR008L0159	120	135	96	6*12	60	80.5	60	M4
DR011L0115	120	135	96	6*12	60	80.5	60	M4
DR017LP746	120	135	105	6*12	65	80.5	60	M4
DR025LP507	150	160	120	6*12	88	107	75	M4
DR033LP320	150	160	120	6*12	88	107	75	M4

Table 7-30

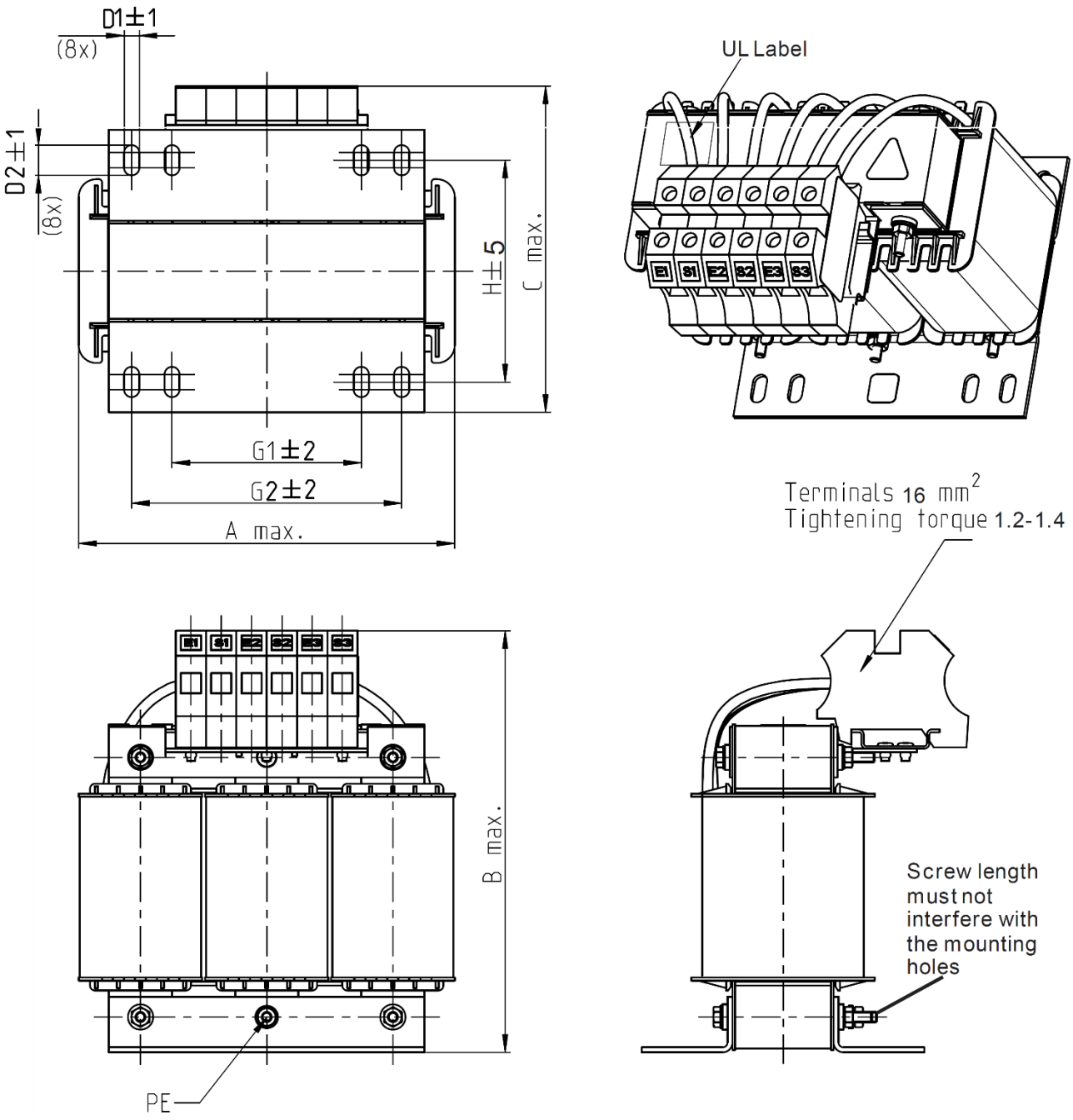

Figure 7-15

Unit: mm

AC Output Reactors Delta Part #	A	B	C	D1*D2	H	G	G1	Q	M	PE D
DR049LP215	180	205	175	6*12	115	85	122	16	1.2-1.4	M4
DR065LP162	180	215	185	6*12	115	85	122	35	2.5-3.0	M4

Table 7-31

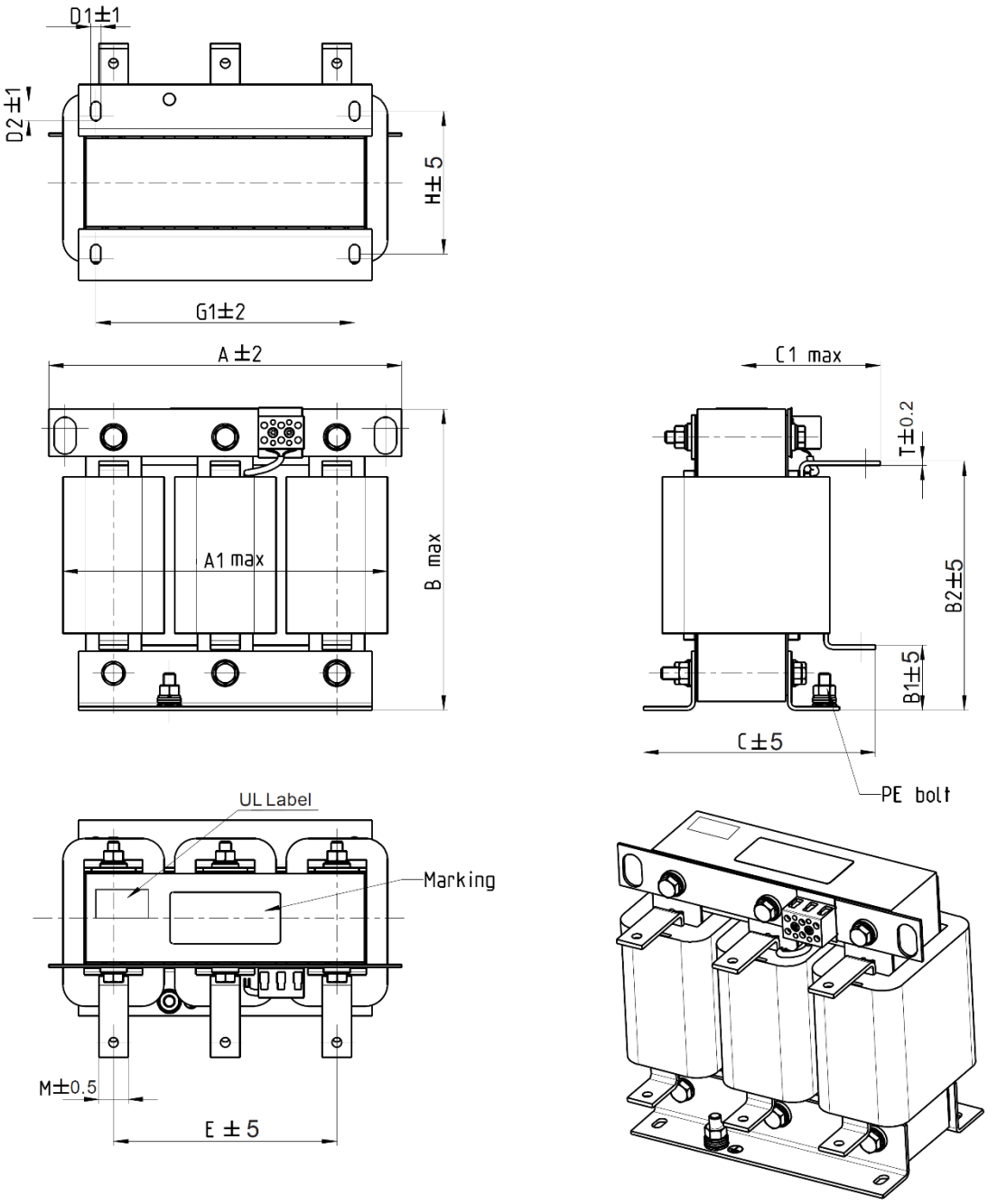

Figure 7-16

Unit: mm

AC Output Reactor Delta Part #	A	A1	B	B1	B2	C	C1	D1*D2	E	G1	H	M*T
DR049LP215	240	228	215	44	170	151	100	7*13	152	176	85	20*3

Table 7-32

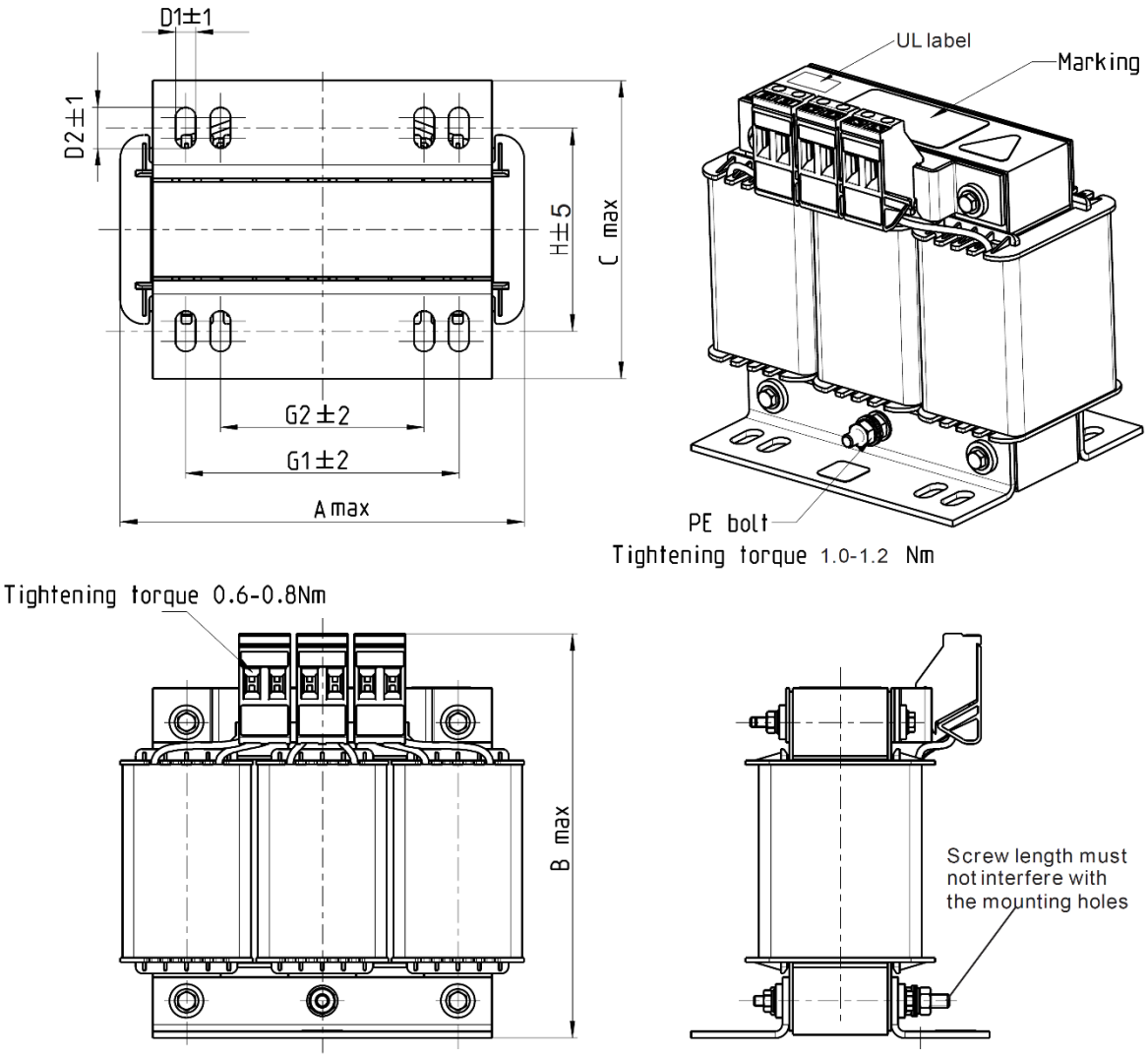

Figure 7-17

Unit: mm

AC Output Reactors Delta Part #	A	B	C	D1*D2	H	G1	G2	PE D
DR003L0810	96	115	65	6*9	42	60	40	M4
DR004L0607	120	135	95	6*12	60	80.5	60	M4
DR006L0405	120	135	95	6*12	60	80.5	60	M4
DR009L0270	150	160	100	6*12	74	107	75	M4
DR010L0231	150	160	115	6*12	88	107	75	M4
DR012L0202	150	160	115	6*12	88	107	75	M4
DR018L0117	150	160	115	6*12	88	107	75	M4
DR024LP881	150	160	115	6*12	88	107	75	M4
DR032LP660	180	190	145	6*12	114	122	85	M6

Table 7-33

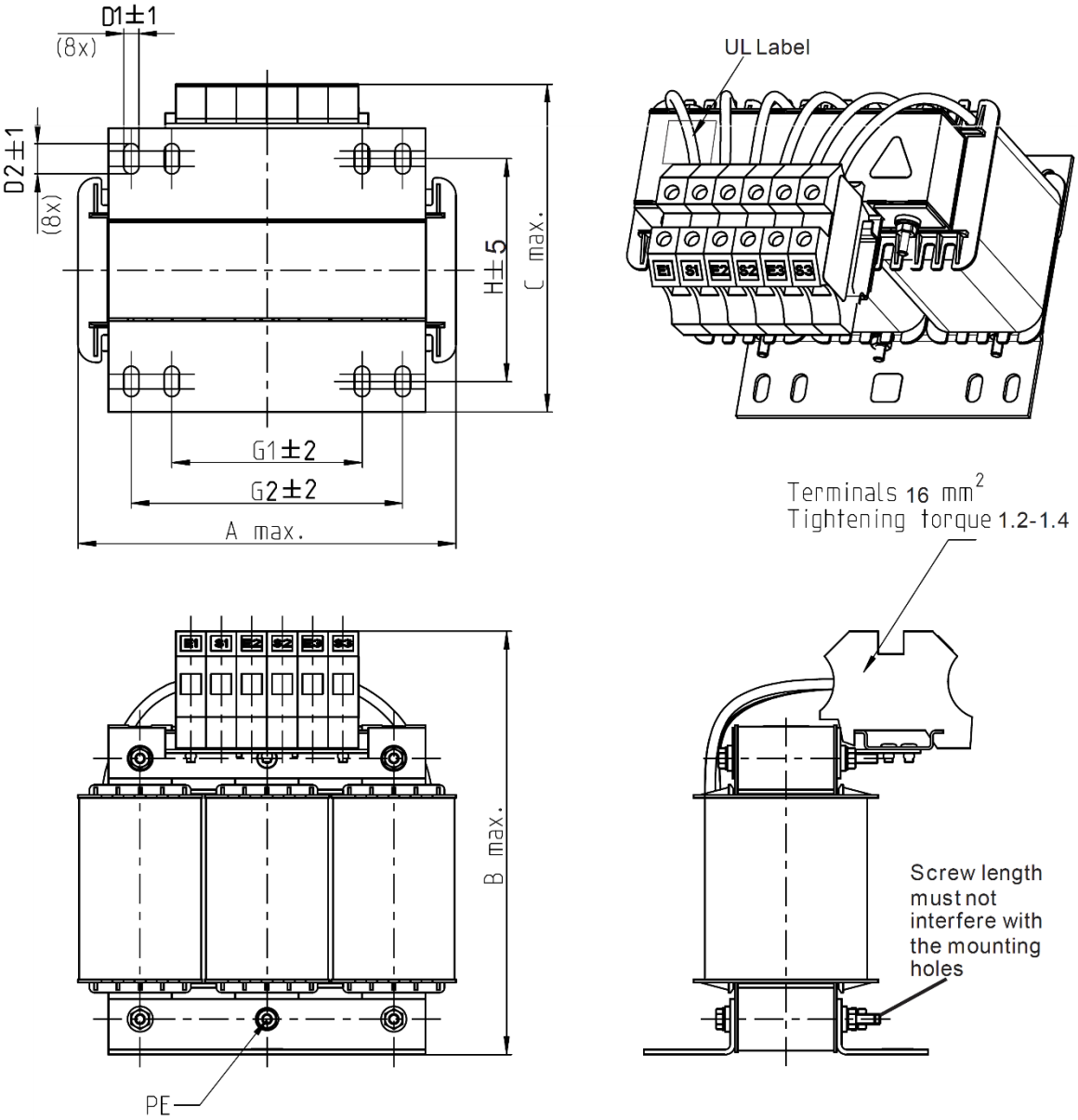

Figure 7-18

Unit: mm

AC Output Reactors Delta Part #	A	B	C	D1*D2	H	G1	G2	PE D
DR038LP639	180	205	170	6*12	115	85	122	M4
DR045LP541	235	245	155	7*13	85	/	176	M6

Table 7-34

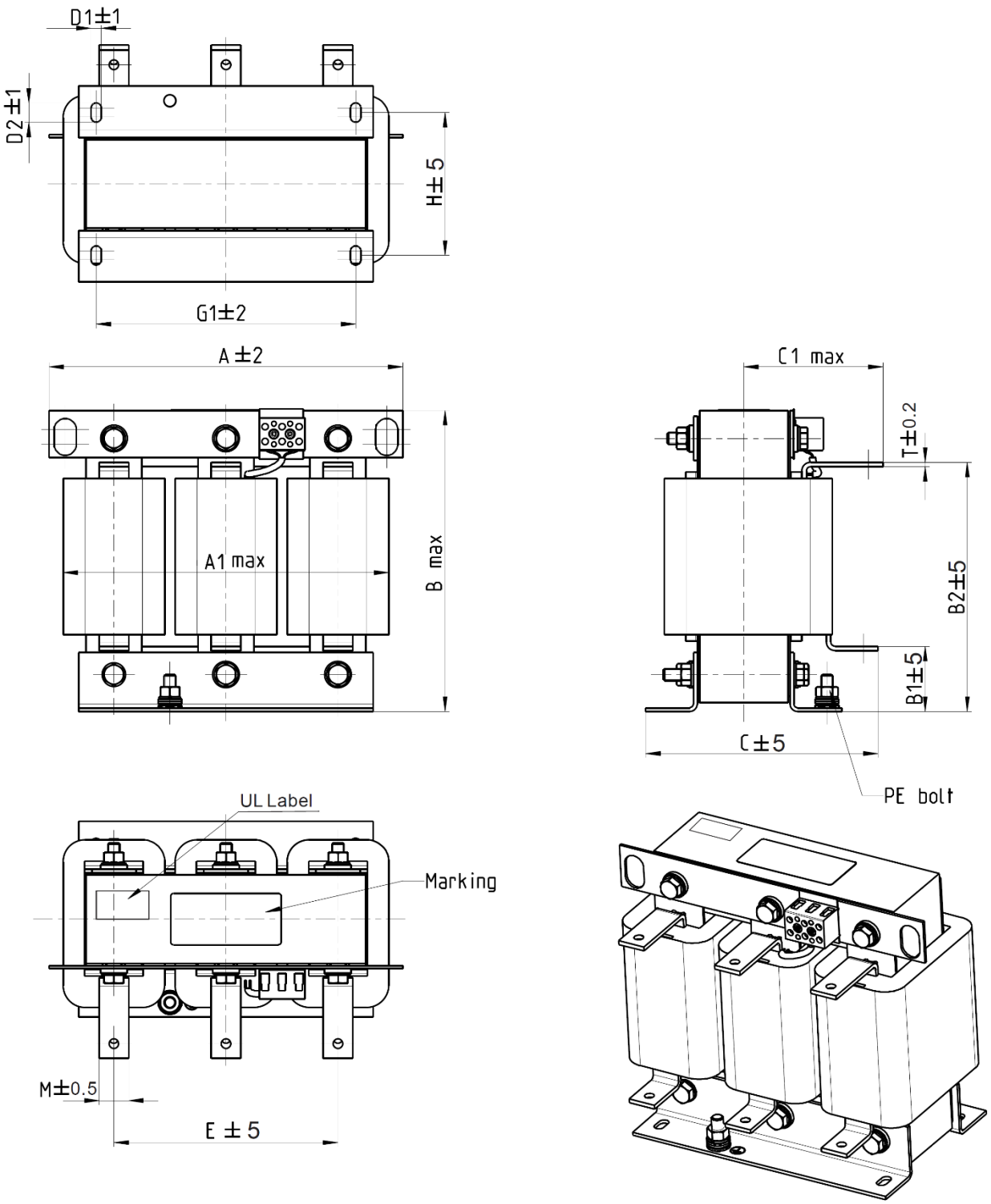

Figure 7-19

Unit: mm

AC Output Reactors Delta Part #	A	A1	B	B1	B2	C	C1	D1*D2	E	G1	H	M*T
DR060LP405	240	228	215	44	170	163	110	7*13	152	176	97	20*3
DR073LP334	250	235	235	44	186	174	115	11*18	160	190	124	20*3
DR091LP267	250	240	235	44	186	174	115	11*18	160	190	124	20*3
DR110LP221	270	260	245	50	192	175	115	10*18	176	200	106	20*3

Table 7-35

DC Reactor:

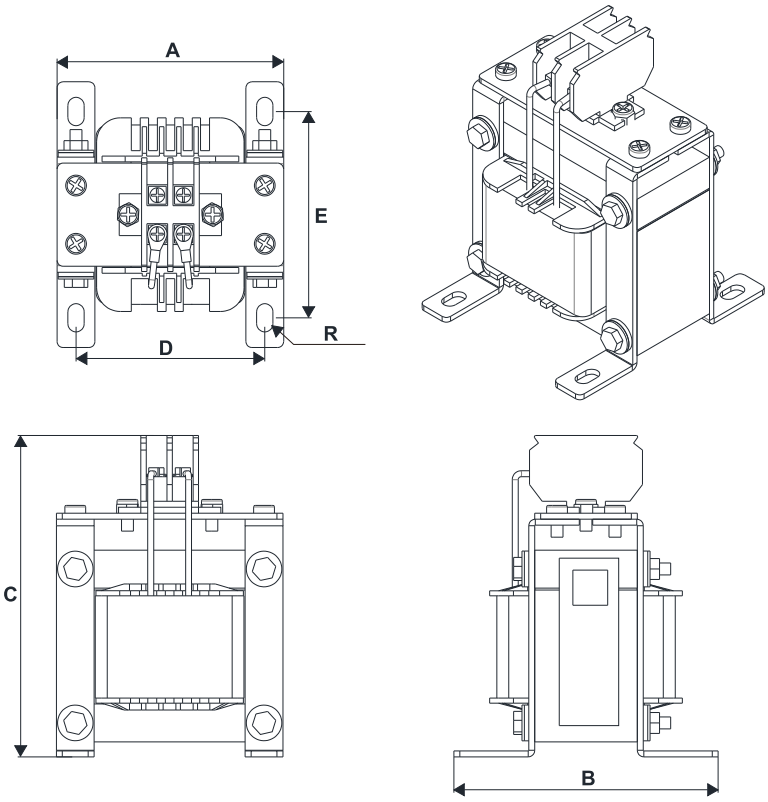

Figure 7-20

DC Reactors Delta Part #	Rated Current (Arms)	Saturation Current (Arms)	DC Reactors (mH)	A (mm)	B (mm)	C (mm)	D (mm)	E (mm)	R (mm)
DR005D0585	5	8.64	5.857	79	78	112	64±2	56±2	9.5*5.5
DR008D0366	8	12.78	3.660	79	78	112	64±2	56±2	9.5*5.5
DR011D0266	11	18	2.662	79	92	112	64±2	69.5±2	9.5*5.5
DR017D0172	17	28.8	1.722	79	112	112	64±2	89.5±2	9.5*5.5
DR025D0117	25	43.2	1.172	99	105	128	79±2	82.5±2	9.5*5.5
DR033DP851	33	55.8	0.851	117	110	156	95±2	87±2	10*6.5
DR049DP574	49	84.6	0.574	117	120	157	95±2	97±2	10*6.5
DR065DP432	65	111.6	0.432	117	140	157	95±2	116.5±2	10*6.5
DR003D1870	3	5.22	18.709	79	78	112	64±2	56±2	9.5*5.5
DR004D1403	4	6.84	14.031	79	92	112	64±2	69.5±2	9.5*5.5
DR006D0935	6	10.26	9.355	79	92	112	64±2	69.5±2	9.5*5.5
DR009D0623	9	14.58	6.236	79	112	112	64±2	89.5±2	9.5*5.5
DR010D0534	10.5	17.1	5.345	99	93	128	79±2	70±2	9.5*5.5
DR012D0467	12	19.8	4.677	99	105	128	79±2	82.5±2	9.5*5.5
DR018D0311	18	30.6	3.119	117	110	144	95±2	87±2	10*6.5
DR024D0233	24	41.4	2.338	117	120	144	95±2	97±2	10*6.5
DR032D0175	32	54	1.754	117	140	157	95±2	116.5±2	10*6.5
DR038D0147	38	64.8	1.477	136	135	172	111±2	112±2	10*6.5
DR045D0124	45	77.4	1.247	136	135	173	111±2	112±2	10*6.5

Table 7-36

7-4-5 The Motor Cable Length

1. Consequence of leakage current on the motor

   If the cable length is too long, the stray capacitance between cables increases and may cause leakage current. In this case, It activates the over-current protection, increases leakage current, or may affect the current display. The worst case is that it may damage the AC motor drive. If more than one motor is connected to one AC motor drive, the total wiring length should be the sum of the wiring length from AC motor drive to each motor.

   For the 460V models AC motor drive, when you install an overload thermal relay between the drive and the motor to protect the motor from overheating, the connecting cable must be shorter than 50 m; however, an overload thermal relay malfunction may still occur. To prevent the malfunction, install an output reactor (optional) to the drive or lower the carrier frequency setting (see Pr.00-17 Carrier Frequency).

2. Consequence of the surge voltage on the motor

   When a motor is driven by a PWM-type AC motor drive, the motor terminals experience surge voltages (dv/dt) due to power transistor conversion of AC motor drive. When the motor cable is very long (especially for the 460V models), surge voltages (dv/dt) may damage the motor insulation and bearing. To prevent this, follow these rules:

   a. Use a motor with enhanced insulation.
   b. Reduce the cable length between the AC motor drive and motor to suggested values.
   c. Connect an output reactor (optional) to the output terminals of the AC motor drive.

   Refer to the following tables for the suggested motor shielded cable length. For drive models < 480V, use a motor with a rated voltage ≤ 500 V_{AC} and an insulation level ≥ 1.35 kV_{p-p} in accordance with IEC 60034-17. For the 575V drive model, use a motor with a rated voltage ≤ 600 V_{AC} and an insulation level ≥ 1.79 kV_{p-p} in accordance with IEC 60034-25.

110V One-phase Drive Model	Normal Duty Rated Current (Arms)	Without an AC Output Reactor		With an AC Output Reactor	
		Shielded Cable (meter)	Non-shielded Cable (meter)	Shielded Cable (meter)	Non-shielded Cable (meter)
VFD1A6MS11ANSAA VFD1A6MS11ENSAA	1.8	50	75	75	115
VFD2A5MS11ANSAA VFD2A5MS11ENSAA	2.7				
VFD4A8MS11ANSAA VFD4A8MS11ENSAA	5.5				

Table 7-37

230V One-phase Drive Model	Normal Duty Rated Current (Arms)	Without an AC Output Reactor		With an AC Output Reactor	
		Shielded Cable (meter)	Non-shielded Cable (meter)	Shielded Cable (meter)	Non-shielded Cable (meter)
VFD1A6MS21ANSAA VFD1A6MS21ENSAA VFD1A6MS21AFSAA	1.8	50	75	75	115
VFD2A8MS21ANSAA VFD2A8MS21ENSAA VFD2A8MS21AFSAA	3.2				

230V One-phase Drive Model	Normal Duty Rated Current (Arms)	Without an AC Output Reactor		With an AC Output Reactor	
		Shielded Cable (meter)	Non-shielded Cable (meter)	Shielded Cable (meter)	Non-shielded Cable (meter)
VFD4A8MS21ANSAA VFD4A8MS21ENSAA VFD4A8MS21AFSAA	5	50	75	75	115
VFD7A5MS21ANSAA VFD7A5MS21ENSAA VFD7A5MS21AFSAA	8.5				
VFD11AMS21ANSAA VFD11AMS21ENSAA VFD11AMS21AFSAA	12.5				

Table 7-38

230V Three-phase Drive Model	Normal Duty Rated Current (Arms)	Without an AC Output Reactor		With an AC Output Reactor	
		Shielded Cable (meter)	Non-shielded Cable (meter)	Shielded Cable (meter)	Non-shielded Cable (meter)
VFD1A6MS23ANSAA VFD1A6MS23ENSAA	1.8	50	75	75	115
VFD2A8MS23ANSAA VFD2A8MS23ENSAA	3.2				
VFD4A8MS23ANSAA VFD4A8MS23ENSAA	5				
VFD7A5MS23ANSAA VFD7A5MS23ENSAA	8				
VFD11AMS23ANSAA VFD11AMS23ENSAA	12.5				
VFD17AMS23ANSAA VFD17AMS23ENSAA	19.5				
VFD25AMS23ANSAA VFD25AMS23ENSAA	27				
VFD33AMS23ANSAA VFD33AMS23ENSAA	36	100	150	150	225
VFD49AMS23ANSAA VFD49AMS23ENSAA	51				
VFD65AMS23ANSAA VFD65AMS23ENSAA	69				

Table 7-39

460V Three-phase Drive Model	Normal Duty Rated Current (Arms)	Without an AC Output Reactor		With an AC Output Reactor	
		Shielded Cable (meter)	Non-shielded Cable (meter)	Shielded Cable (meter)	Non-shielded Cable (meter)
VFD1A5MS43ANSAA VFD1A5MS43ENSAA VFD1A5MS43AFSAA	1.8	35	50	50	90
VFD2A7MS43ANSAA VFD2A7MS43ENSAA VFD2A7MS43AFSAA VFD2A7MS43PNSAA	3				
VFD4A2MS43AFSAA VFD4A2MS43ANSAA VFD4A2MS43ENSAA VFD4A2MS43PNSAA	4.6				

460V Three-phase Drive Model	Normal Duty Rated Current (Arms)	Without an AC Output Reactor		With an AC Output Reactor	
		Shielded Cable (meter)	Non-shielded Cable (meter)	Shielded Cable (meter)	Non-shielded Cable (meter)
VFD5A5MS43AFSAA VFD5A5MS43ANSAA VFD5A5MS43ENSAA VFD5A5MS43PNSAA	6.5	50	75	75	115
VFD7A3MS43ANSAA VFD7A3MS43ENSAA VFD7A3MS43AFSAA VFD7A3MS43PNSAA	8.9				
VFD9A0MS43AFSAA VFD9A0MS43ANSAA VFD9A0MS43ENSAA VFD9A0MS43PNSAA	10.5				
VFD13AMS43ANSAA VFD13AMS43ENSAA VFD13AMS43AFSAA	15.7				
VFD17AMS43ANSAA VFD17AMS43ENSAA VFD17AMS43AFSAA	20.5	100	150	150	225
VFD25AMS43ANSAA VFD25AMS43ENSAA VFD25AMS43AFSAA	28				
VFD32AMS43ANSAA VFD32AMS43ENSAA VFD32AMS43AFSAA	36				
VFD38AMS43ANSAA VFD38AMS43ENSAA VFD38AMS43AFSAA	41.5				
VFD45AMS43ANSAA VFD45AMS43ENSAA VFD45AMS43AFSAA	49				

Table 7-40

575V Three-phase Drive Model	Normal Duty Rated Current (Arms)	Without an AC Output Reactor*1		With an AC Output Reactor	
		Shielded Cable (meter)	Non-shielded Cable (meter)	Shielded Cable (meter)	Non-shielded Cable (meter)
VFD1A7MS53ANSAA	2.1	15	55	N/A	N/A
VFD3A0MS53ANSAA	3.6	50	80		
VFD4A2MS53ANSAA	5	65	120		
VFD6A6MS53ANSAA	8.5	65	295		
VFD9A9MS53ANSAA	11.5	145	320		
VFD12AMS53ANSAA	15	145	320		

Table 7-41

*1 Without an AC output reactor: Use the motor cable length of the 575V drive model only for 4 kHz carrier frequency (Pr.00-17 = 4). If you use it for > 4 kHz carrier frequency, you may need to reduce the motor cable length to prevent over-current protection caused by large leakage current, depending on the actual on-site situations.

7-5 Zero Phase Reactors

You can also suppress interference by installing a zero phase reactor at the main input or the motor output of the drive, depending on the location of the interference. Delta provides two types of zero phase reactors to solve interference problems.

A. Casing with mechanical fixed part

Used for the zero phase reactor at the main input/motor output. It withstands large current load and is used for high frequencies. You can get higher impedance by increasing the number of turns.

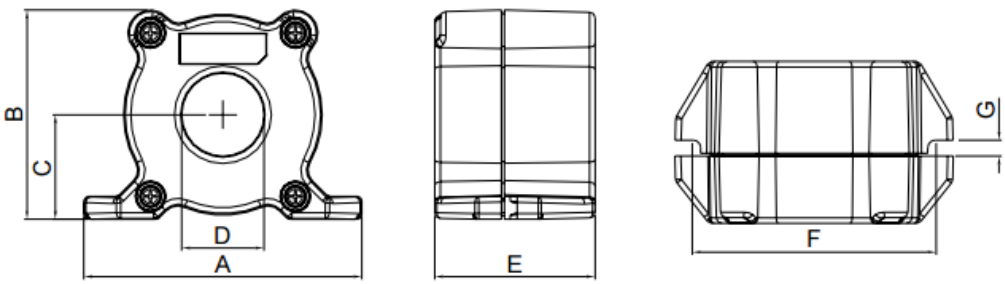

Figure 7-21

Unit: mm

Model	A	B	C	D	E	F	G(Ø)	To use w/
RF008X00A	99	73	36.5	29	56.5	86	5.5	Motor cable

Table 7-42

B. Casing without mechanical fixed part

Adopts nanocrystalline core developed by VAC®, and has high initial permeability, high saturation induction density, low iron loss and perfect temperature characteristic. If the zero phase reactor does not need to be fixed mechanically, use this solution.

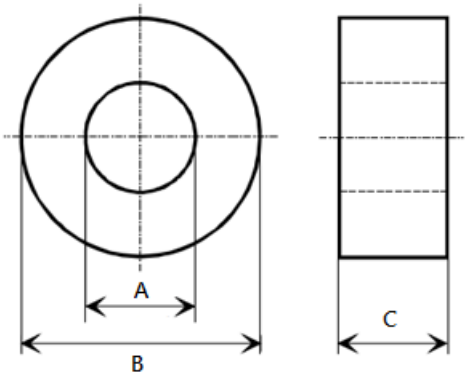

Figure 7-22

Unit: mm

Model	A	B	C
T60006L2040W453	22.5	43.1	18.5
T60006L2050W565	36.3	53.5	23.4

Table 7-43

7-5-1 Installation

During installation, pass the cable through at least one zero phase reactor. Use a suitable cable type (pressure endurance, current endurance, insulation class, and wire gauge) so that the cable passes easily through the zero phase reactor. Do not pass the grounding cable through the zero phase reactor; only pass the motor wire and power cable through the zero phase reactor. With longer motor cables the zero-phase reactor can effectively reduce interference at the motor output. Moreover, pay extra attention to the large leakage current due to long cable length. This may cause temperature rise in the zero phase reactor. Install the zero phase reactor as close to the output of the drive as possible. Figure 7-23 below shows the installation diagram for a single turn zero phase reactor. If the wire diameter allows several turns, Figure 7-24 shows the installation of a multi-turn zero phase reactor. The more turns, the better the noise suppression effect.

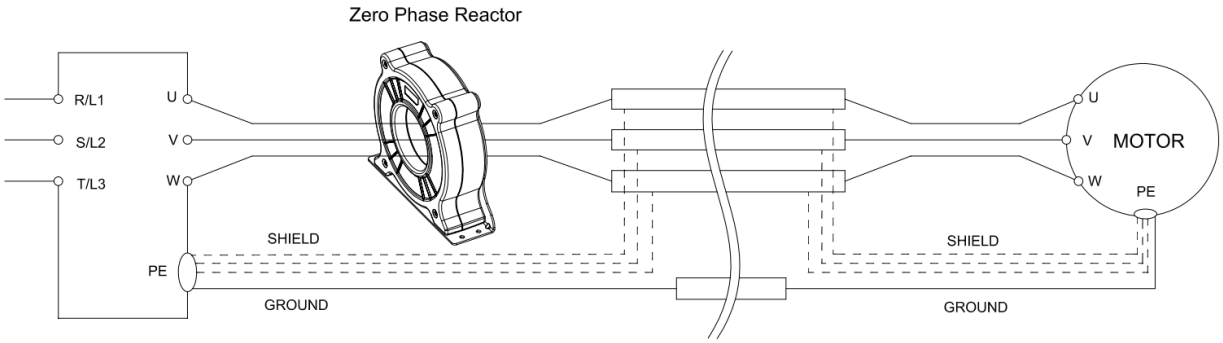

Figure 7-23 Single turn wiring diagram for shielding wire with a zero phase reactor

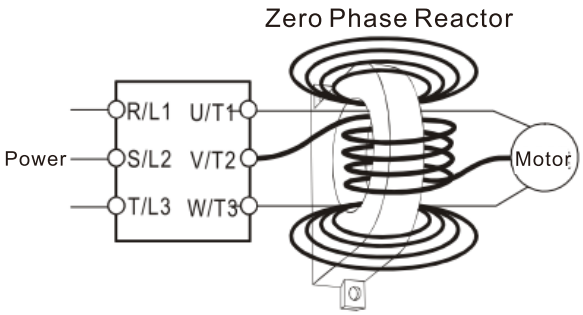

Figure 7-24 Multi-turn zero phase reactor

7-5-2 Installation Precaution

Install the zero phase reactor at the drive's output terminal (U/T1, V/T2 and W/T3). After the zero phase reactor is installed, it reduces the electromagnetic radiation and load stress emitted by the wiring of the drive. The number of zero phase reactors required for the drive depends on the wiring length and the drive voltage.

The normal operating temperature of the zero phase reactor should be lower than 85°C (176°F). However, when the zero phase reactor is saturated, its temperature may exceed 85°C (176°F). In this case, increase the number of zero phase reactors to avoid saturation. The following are reasons that might cause saturation of the zero phase reactors: the drive wiring is too long; the drive has several sets of loads; the wiring is in parallel; or the drive uses high capacitance wiring. If the temperature of the zero phase reactor exceeds 85°C (176°F) during the operation of the drive, increase the number of zero phase reactors.

Recommended maximum wiring gauge when installing a zero phase reactor

Zero Phase Reactor Model No.	Max. Wire Gauge or LUG width	Max. Wire Gauge AWG (1Cx3)		Max. Wire Gauge AWG (4Cx1)	
		75°C	90°C	75°C	90°C
RF008X00A	13 mm	3 AWG	1 AWG	3 AWG	1 AWG
T600006L2040W453	11 mm	9 AWG	4 AWG	6 AWG	6 AWG
T600006L2050W565	16 mm	1 AWG	2/0 AWG	1 AWG	1/0 AWG

Table 7-44

7-5-3 Zero Phase Reactor for Signal Cable

To solve interference problems between signal cables and electrical equipment, install a zero phase reactor on the signal cable. Refer to the table below for models and dimensions. Installing a zero phase reactor on the signal cable at the source of the interference suppresses the interference and noise between signal cables.

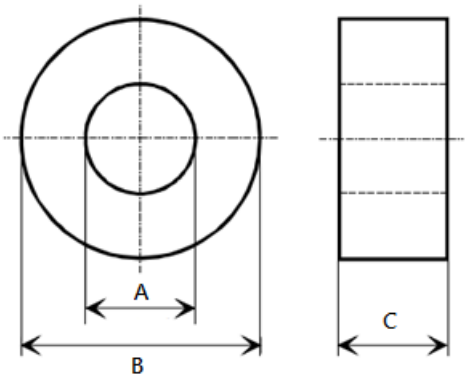

Figure 7-25

Unit: mm

Model	A	B	C
T60004L2016W620	10.7	17.8	8.0
T60004L2025W622	17.5	27.3	12.3

Table 7-45

7-6 EMC Filter

Use EMC filters to enhance the EMC performance for the environment and machines and to comply with EMC regulations, further reducing EMC problems. If you purchase a motor drive without a built-in EMC filter, it is recommended that you select the EMC filters as shown below. For some motor drive models, you need to work with zero phase reactors to be compliant with EMC regulations. Refer to the table and figure below for the recommended model, setting method, and maximum motor cable length of the EMC filter and zero phase reactor.

Frame	Motor Drive Model #	Input Current (A)	Filter Model #	Recommended Model of Zero Phase Reactors		Conducted Emission Maximum Motor Cable Length						Radiated Emission Maximum Motor Cable Length		
						C1 30 m			C2 100 m			C2 100 m		
						Position to install a zero-phase reactor								
				DELTA	VAC®	*1	*2	*3	*1	*2	*3	*1	*2	*3
A	VFD1A6MS11ANSAA	6.8	EMF11AM21A	RF008X00A	T60006L2040W453				NA					
A	VFD1A6MS21ANSAA	3.8	EMF11AM21A	RF008X00A	T60006L2040W453		✓	✓	NA				✓	✓
A	VFD2A8MS21ANSAA	6.7	EMF11AM21A	RF008X00A	T60006L2040W453		✓	✓	NA				✓	✓
A	VFD1A6MS23ANSAA	2.2	EMF10AM23A	RF008X00A	T60006L2040W453		✓	✓	NA				✓	✓
A	VFD2A8MS23ANSAA	3.8	EMF10AM23A	RF008X00A	T60006L2040W453		✓	✓	NA				✓	✓
A	VFD4A8MS23ANSAA	6	EMF10AM23A	RF008X00A	T60006L2040W453		✓	✓	NA				✓	✓
A	VFD1A5MS43ANSAA	2.5	EMF6A0M43A	RF008X00A	T60006L2040W453			✓	NA					✓
A	VFD2A7MS43ANSAA	4.2	EMF6A0M43A	RF008X00A	T60006L2040W453			✓	NA					✓
A	VFD2A7MS43PNSAA	4.2	EMF6A0M43A	RF008X00A	T60006L2040W453			✓	NA					✓
A	VFD1A7MS53ANSAA	2.4	EMF6A0M63B	RF008X00A	T60006L2040W453				NA*					
A	VFD2A5MS11ANSAA	10.1	EMF11AM21A	RF008X00A	T60006L2040W453				NA					
B	VFD4A8MS21ANSAA	10.5	EMF11AM21A	RF008X00A	T60006L2040W453		✓	✓	NA				✓	✓
B	VFD7A5MS23ANSAA	9.6	EMF10AM23A	RF008X00A	T60006L2040W453		✓	✓	NA				✓	✓
B	VFD3A0MS53ANSAA	4.2	EMF6A0M63B	RF008X00A	T60006L2040W453				NA*					
B	VFD4A2MS43ANSAA	6.4	EMF6A0M43A	RF008X00A	T60006L2040W453			✓	NA					✓
B	VFD4A2MS43PNSAA	6.4	EMF6A0M43A	RF008X00A	T60006L2040W453			✓	NA					✓
C	VFD4A8MS11ANSAA	20.6	EMF27AM21B	RF008X00A	T60006L2040W453				NA					
C	VFD7A5MS21ANSAA	17.9	EMF27AM21B	RF008X00A	T60006L2040W453			✓	NA					✓
C	VFD11AMS21ANSAA	26.3	EMF27AM21B	RF008X00A	T60006L2040W453			✓	NA					✓
C	VFD11AMS23ANSAA	15	EMF24AM23B	RF008X00A	T60006L2040W453		✓	✓	NA				✓	✓
C	VFD17AMS23ANSAA	23.4	EMF24AM23B	RF008X00A	T60006L2040W453		✓	✓	NA				✓	✓
C	VFD5A5MS43ANSAA	7.2	EMF12AM43B	RF008X00A	T60006L2040W453		✓	✓	NA				✓	✓
C	VFD5A5MS43PNSAA	7.2	EMF12AM43B	RF008X00A	T60006L2040W453	✓	✓	✓			✓	✓	✓	✓
C	VFD7A3MS43ANSAA	8.9	EMF12AM43B	RF008X00A	T60006L2040W453		✓	✓	NA				✓	✓
C	VFD7A3MS43PNSAA	8.9	EMF12AM43B	RF008X00A	T60006L2040W453	✓	✓	✓	NA			✓	✓	
C	VFD4A2MS53ANSAA	5.8	EMF16AM63B	RF008X00A	T60006L2040W453				NA*					
C	VFD6A6MS53ANSAA	9.3	EMF16AM63B	RF008X00A	T60006L2040W453				NA					
C	VFD9A0MS43ANSAA	11.6	EMF12AM43B	RF008X00A	T60006L2040W453		✓	✓	NA				✓	✓
C	VFD9A0MS43PNSAA	11.6	EMF12AM43B	RF008X00A	T60006L2040W453	✓	✓	✓			✓	✓	✓	✓
D	VFD25AMS23ANSAA	32.4	EMF33AM23B	RF008X00A	T60006L2050W565	✓	✓		NA			✓	✓	
D	VFD13AMS43ANSAA	17.3	EMF23AM43B	RF008X00A	T60006L2050W565	✓	✓	✓	NA			✓	✓	✓
D	VFD9A9MS53ANSAA	13.4	EMF16AM63B	RF008X00A	T60006L2040W453				NA					
D	VFD12AMS53ANSAA	17.5	EMF16AM63B	RF008X00A	T60006L2040W453				NA					
D	VFD17AMS43ANSAA	22.6	EMF23AM43B	RF008X00A	T60006L2050W565	✓	✓	✓	NA			✓	✓	✓
E	VFD33AMS23ANSAA	43.2	B84143D0075R127	RF008X00A	T60006L2050W565		✓	✓	NA				✓	✓
E	VFD49AMS23ANSAA	61.2	B84143D0075R127	RF008X00A	T60006L2050W565		✓	✓	NA				✓	✓
E	VFD25AMS43ANSAA	30.8	B84143D0050R127	RF008X00A	T60006L2050W565				NA					
E	VFD32AMS43ANSAA	39.6	B84143D0050R127	RF008X00A	T60006L2050W565		✓	✓	NA				✓	✓
F	VFD65AMS23ANSAA	82.8	B84143D0090R127	RF008X00A	T60006L2050W565		✓	✓	NA				✓	✓
F	VFD38AMS43ANSAA	45.7	B84143D0075R127	RF008X00A	T60006L2050W565		✓	✓	NA				✓	✓
F	VFD45AMS43ANSAA	53.9	B84143D0075R127	RF008X00A	T60006L2050W565		✓	✓	NA				✓	✓

NOTE: It is not necessary to add a zero-phase reactor for passing the C2 conducted emission test.
The maximum motor cable length of the conducted emission C2 class for VFD1A7MS53ANSAA, VFD3A0MS53ANSAA and VFD4A2MS53ANSAA is 75 m, others are 100 m.

Table 7-46

Zero phase reactor installation position diagram:

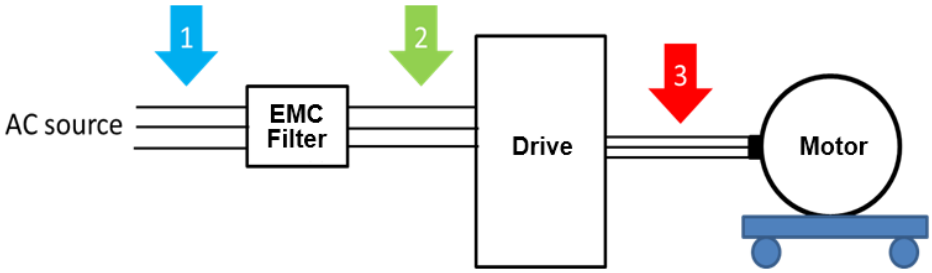

Figure 7-26

*1 Install at the cable between the power supply and the EMC filter

*2 Install at the cable between the EMC filter and the drive

*3 Install at the cable between the drive and the motor

Filter Dimension

EMF11AM21A; EMF10AM23A; EMF6A0M43A

Screw	Torque
M5 * 2	16–20 kg-cm / (13.9–17.3 lb-in.) / (1.56–1.96 Nm)
M4 * 2	14–16 kg-cm / (12.2–13.8 lb-in.) / (1.38–1.56 Nm)

Table 7-47

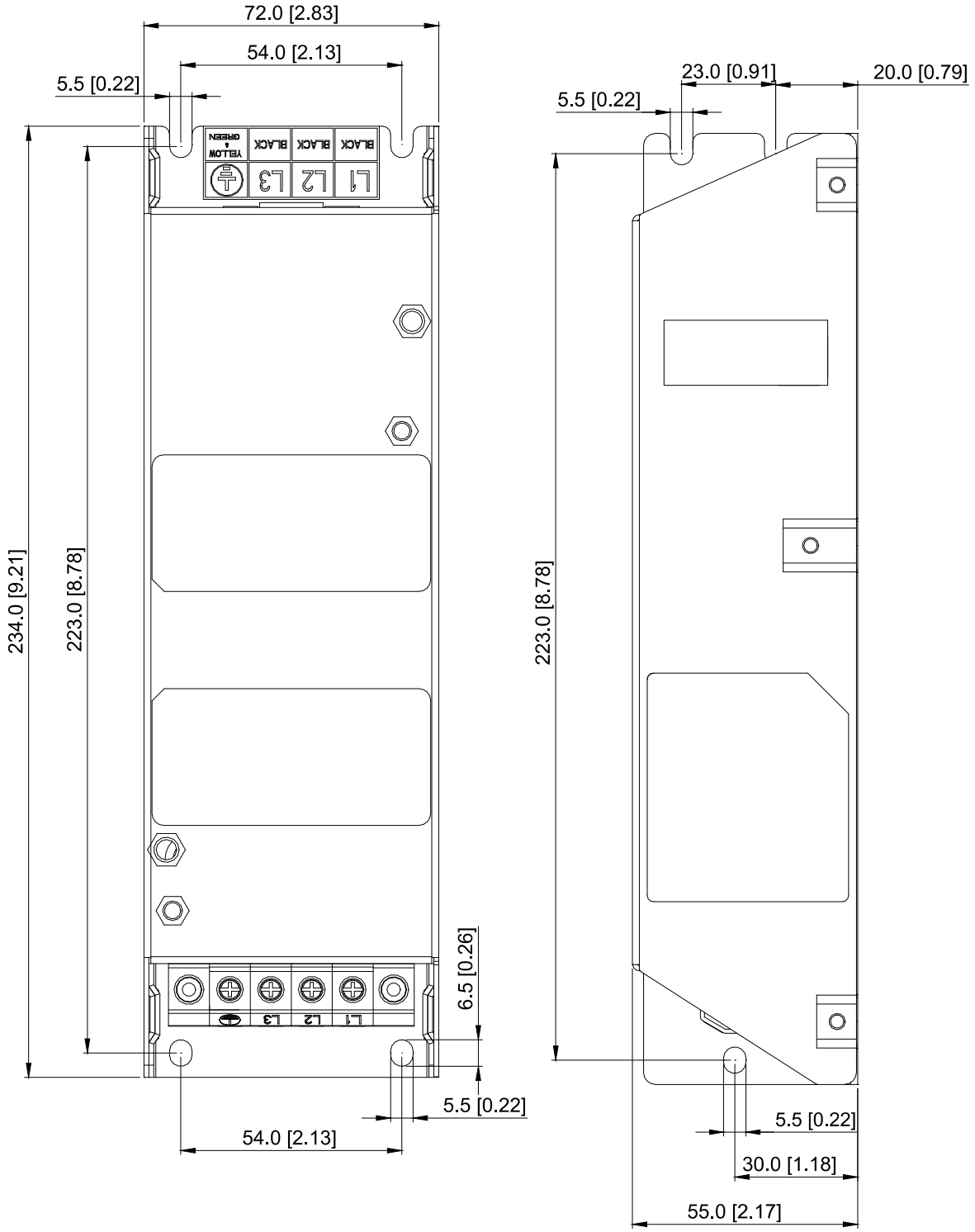

Unit: mm (inch)

Figure 7-27

EMF27AM21B; EMF24AM23B
EMF33AM23B; EMF12AM43B
EMF23AM43B; EMF6A0M63B;
EMF16AM63B

Screw	Torque
M5 * 4	16–20 kg-cm / (13.9–17.3 lb-in.) / (1.56–1.96 Nm)

Table 7-48

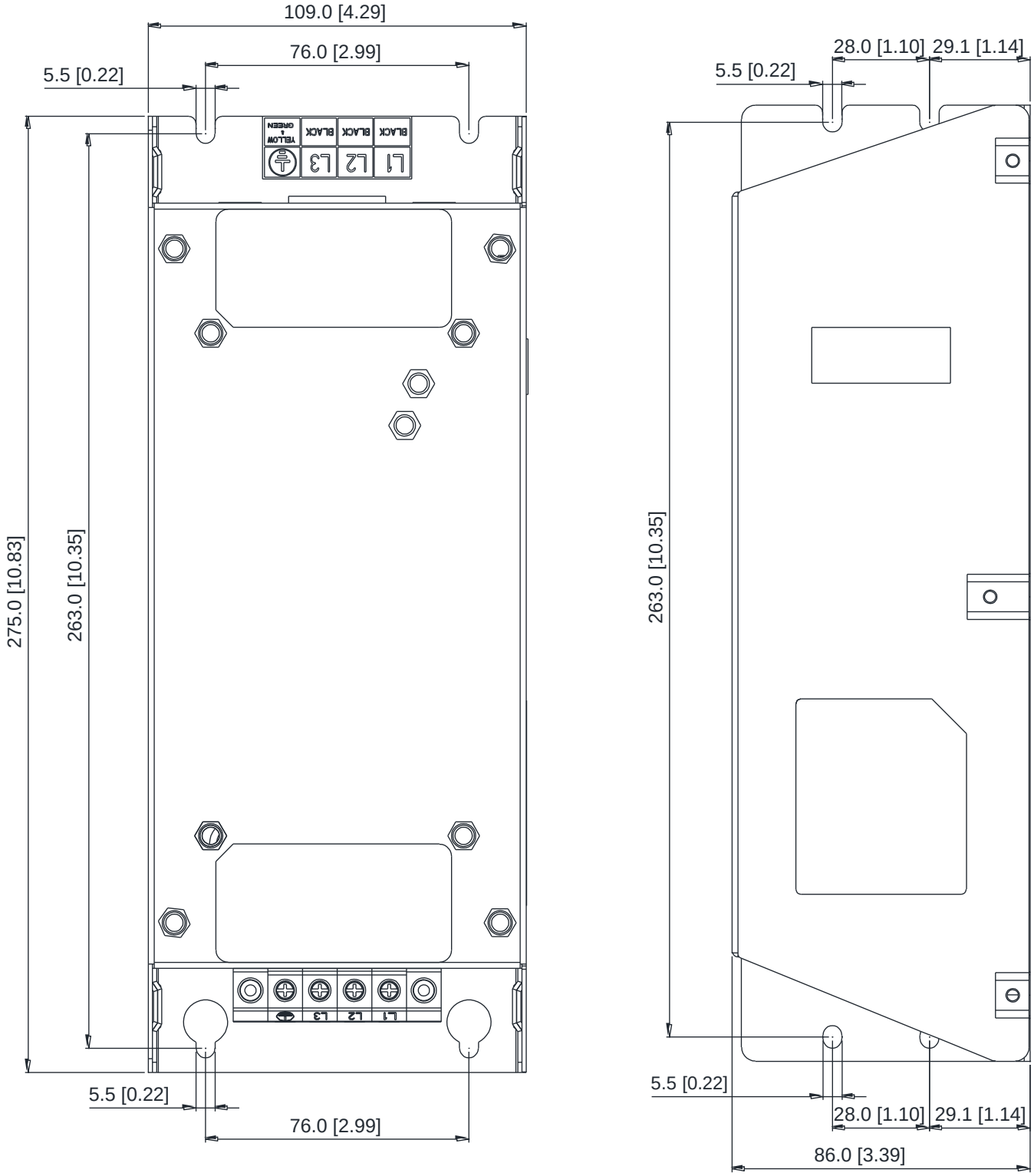

Unit: mm (inch)

Figure 7-28

TDK B84143D0050R127 (50A)

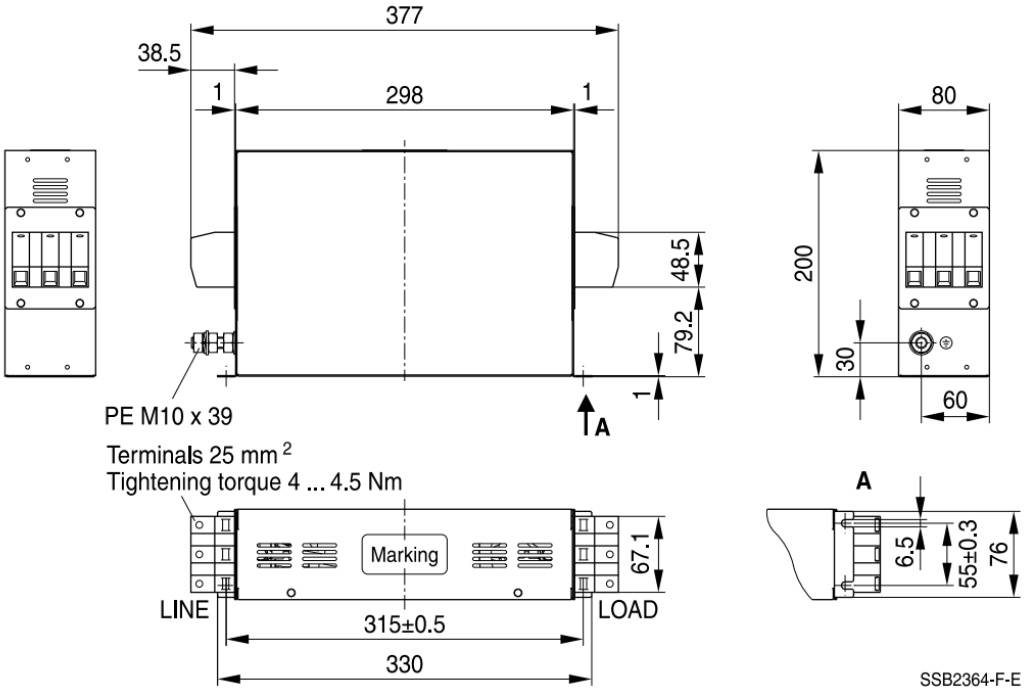

Unit: mm

Figure 7-29

TDK B84143D0075R127 (75A), TDK B84143D0090R127 (90A)

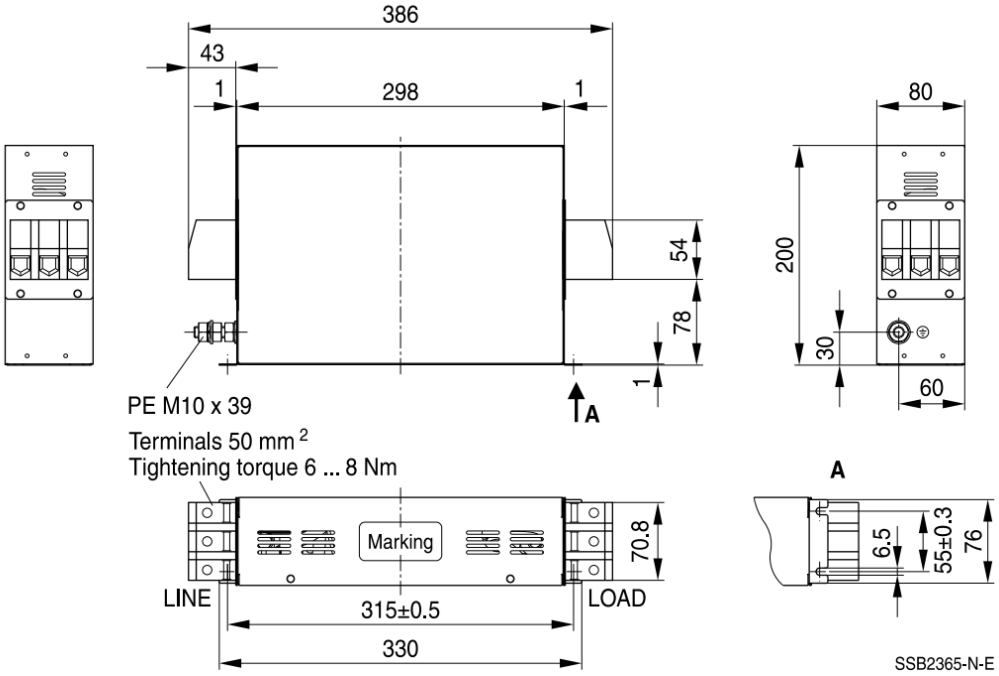

Unit: mm

Figure 7-30

The table below is the maximum shielded cable length for drive models with built-in EMC filters. You can choose the corresponding shielded cable length according to the required noise emission and electromagnetic interference class.

Drive Models with Built-in Filters		Rated Current (HD)	Compliance with EMC (IEC 61800-3) Class C3		Compliance with EMC (IEC 61800-3) Class C2	
Frame	Models		Shielded Cable Length	Fc	Shielded Cable Length	Fc
B	VFD1A5MS43AFSAA	1.5	30 m	4 kHz	20 m	4 kHz
	VFD2A7MS43AFSAA	2.7				
	VFD4A2MS43AFSAA	4.2				
	VFD1A6MS21AFSAA	1.6				
	VFD2A8MS21AFSAA	2.8				
	VFD4A8MS21AFSAA	4.8				
C	VFD5A7MS43AFSAA	5.7				
	VFD7A5MS21AFSAA	7.5				
	VFD7A3MS43AFSAA	7.3				
	VFD9A0MS43AFSAA	9				
	VFD11AMS21AFSAA	11				
D	VFD13AMS43AFSAA	13				
	VFD17AMS43AFSAA	17				
E	VFD25AMS43AFSAA	25				
	VFD32AMS43AFSAA	32				
F	VFD38AMS43AFSAA	38				
	VFD45AMS43AFSAA	45				

Table 7-49

7-7 EMC Shield Plate

EMC Shield Plate (for use with shielded cable)

Frame	Model of EMC Shield Plate	Reference Figure
A	MKM-EPA	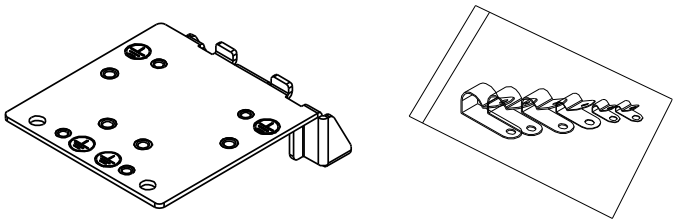 Figure 7-31
B	MKM-EPB	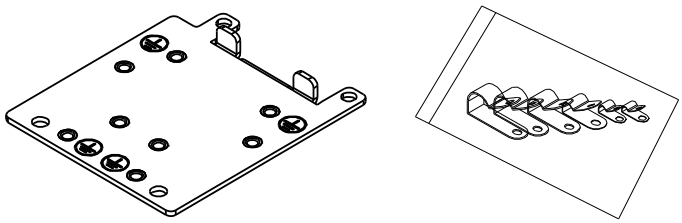 Figure 7-32
C	MKM-EPC	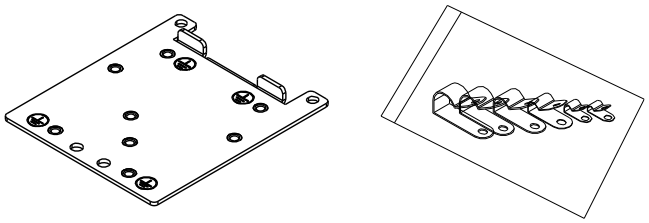 Figure 7-33
D	MKM-EPD	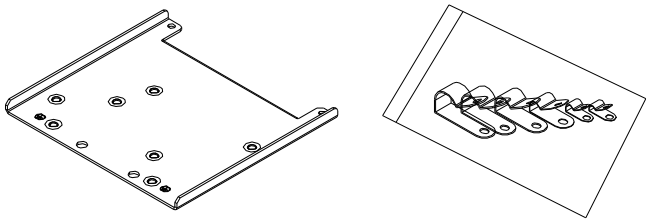 Figure 7-34
E	MKM-EPE	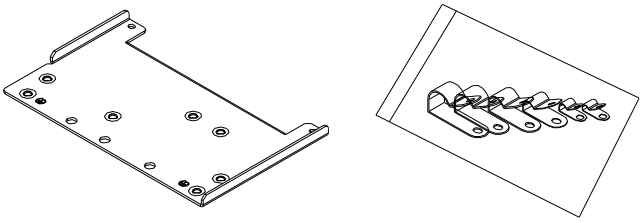 Figure 7-35
F	MKM-EPF	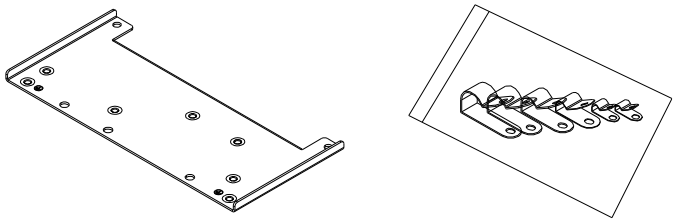 Figure 7-36

Installation

(This example uses Frame A model)

1. As shown in the right figure, fix the shield plate on the AC motor drive.

   Torque value:

Frame	Screw	Torque
A	M3.5	6–8 kg-cm / (5.2–6.9 lb-in.) / (0.59–0.78 Nm)
B	M4	6–8 kg-cm / (5.2–6.9 lb-in.) / (0.59–0.78 Nm)
C	M4	6–8 kg-cm / (5.2–6.9 lb-in.) / (0.59–0.78 Nm)
D	M3	4–6 kg-cm / (3.5–5.2 lb-in.) / (0.39–0.59 Nm)
E	M3	4–6 kg-cm / (3.5–5.2 lb-in.) / (0.39–0.59 Nm)
F	M4	6–8 kg-cm / (5.2–6.9 lb-in.) / (0.59–0.78 Nm)

Table 7-50

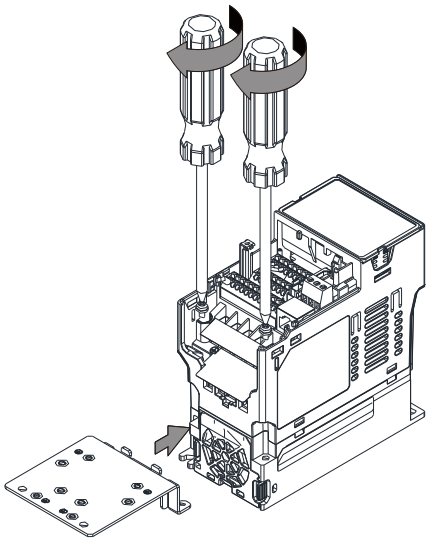

Figure 7-37

2. Select a suitable R-clip according to the wire gauge used, and then fix the R-clip on the shield plate.

Screw	Torque
M4	6–8 kg-cm / (5.2–6.9 lb-in.) / (0.59–0.78 Nm)

Table 7-51

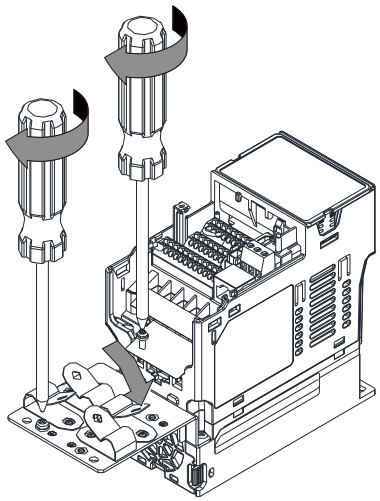

Figure 7-38

Dimensions of EMC Shield Plate

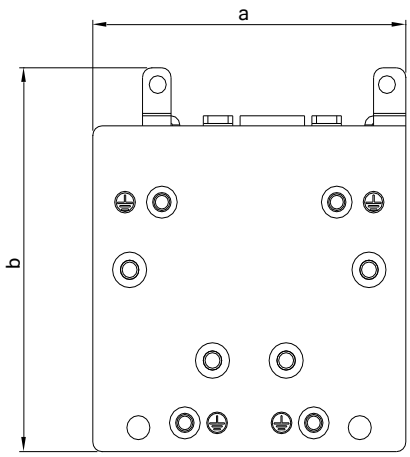

Figure 7-39

Model	Dimensions of Shield Plate Unit: mm (inch)	
	a	b
MKM-EPA	69.3 (2.73)	80.0 (3.15)
MKM-EPB	67.7 (2.67)	79.7 (3.14)
MKM-EPC	78.0 (3.07)	91.0 (3.58)
MKM-EPD	103.4 (4.07)	97.0 (3.82)
MKM-EPE	124.3 (4.89)	77.4 (3.05)
MKM-EPF	168.0 (6.61)	80.0 (3.15)

Table 7-52

Recommended wiring method

Frame	Model of EMC Shield Plate	Reference Figure
A	MKM-EPA	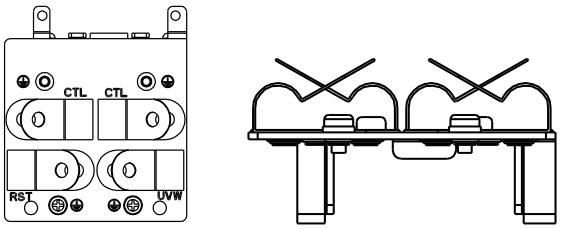 Figure 7-40
B	MKM-EPB	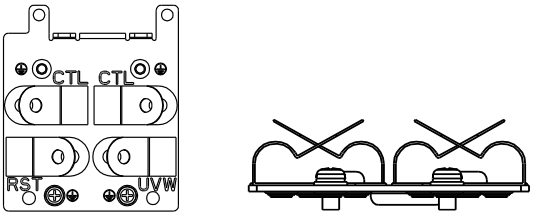 Figure 7-41
C	MKM-EPC	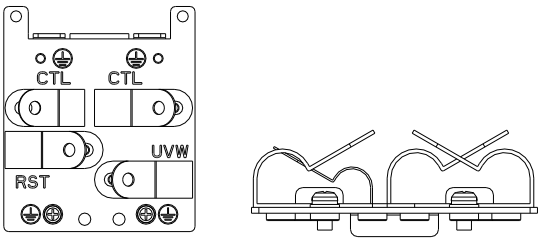 Figure 7-42
D	MKM-EPD	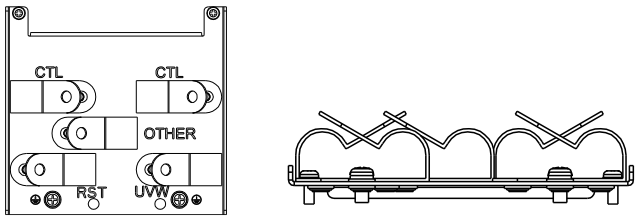 Figure 7-43
E	MKM-EPE	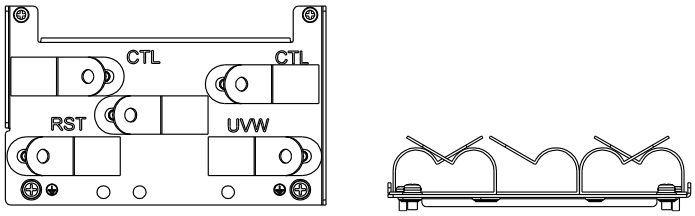 Figure 7-44
F	MKM-EPF	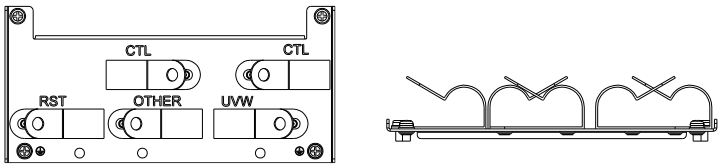 Figure 7-45

7-8 Capacitive Filter

The capacitive filter (CXY101-43A) is a simple filter that supports basic filtering and noise interference reduction and applicable for models below 460V.

Installation diagram:

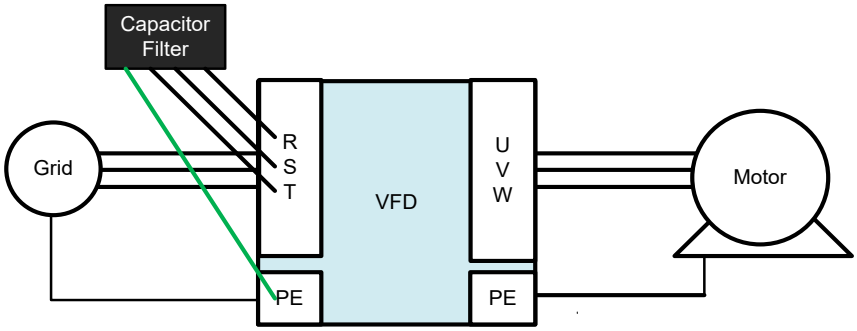

Figure 7-46

Wiring diagram for the capacitive filter and the drive:

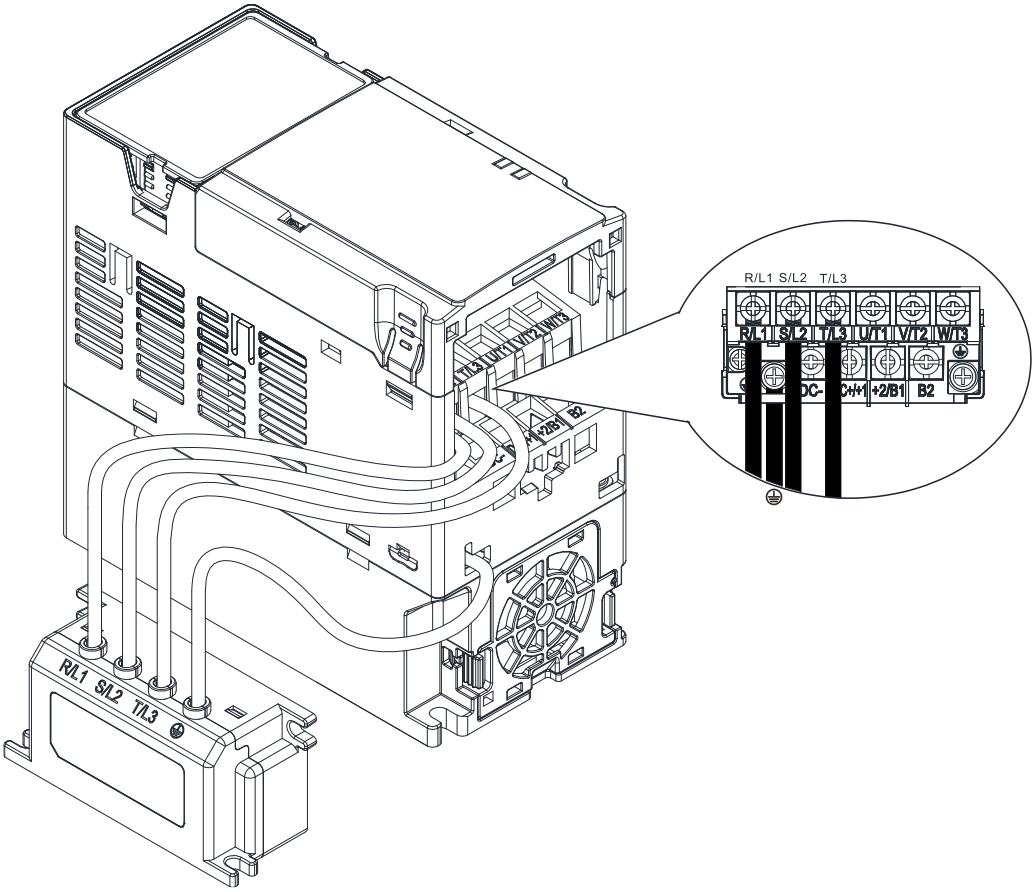

Figure 7-47

Specifications:

Model	Applicable Voltage	Temperature Range	Capacitance
CXY101-43A	110–480 V_{AC}	-40–85°C	Cx: 1uF ± 20% Cy: 0.1uF ± 20%

NOTE: CXY101-43A is not applicable for 575V models. Table 7-53

Dimensions:

CXY101-43A

Unit: mm (inch)

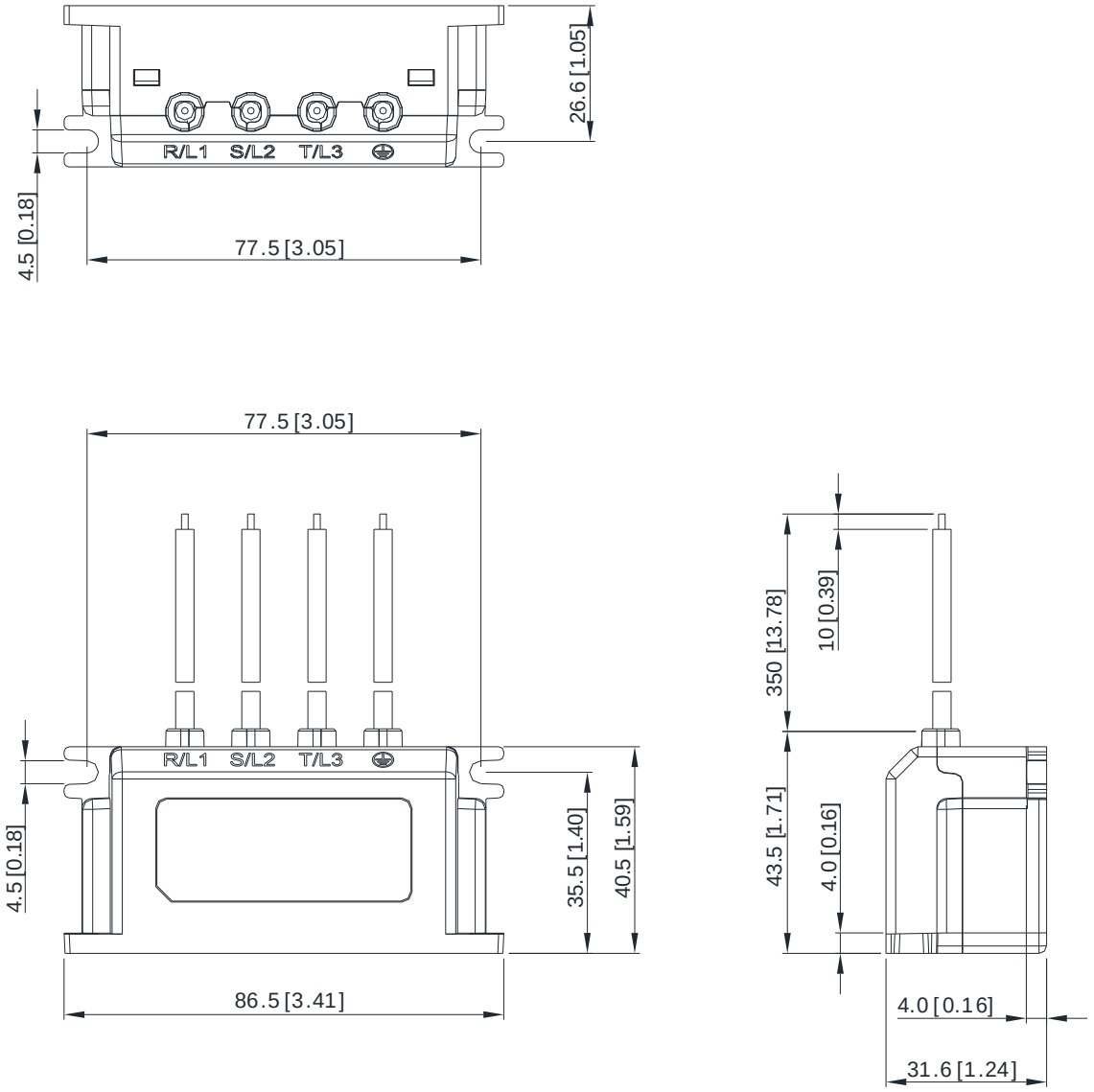

Figure 7-48

7-9 NEMA 1 / UL Type 1 Kit

Conduit boxes installation

Frame A (A1, A2)

Conduit box model: MKM-CBA0

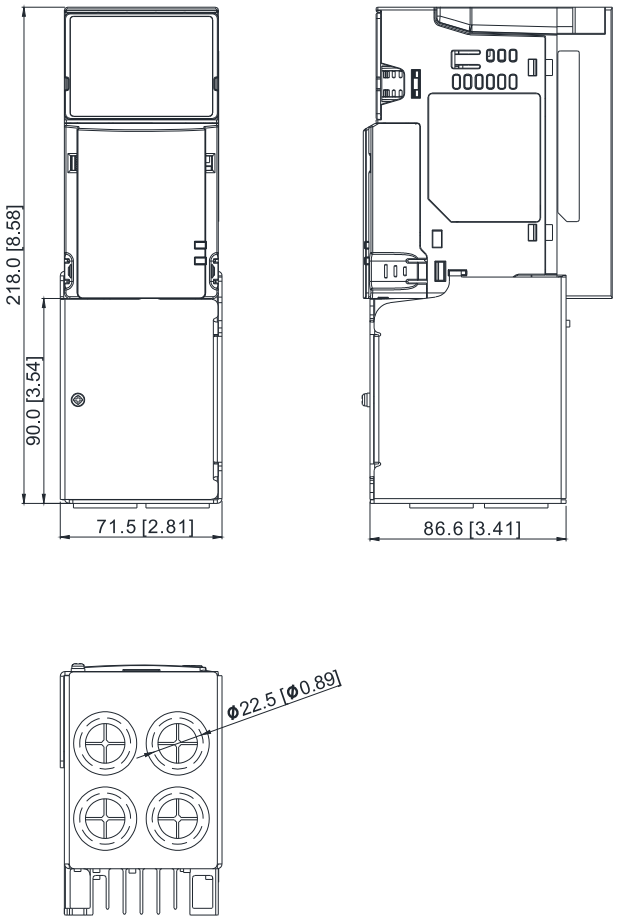

Unit: mm (inch)

Figure 7-49

Frame A (A3–A5)

Conduit box model: MKM-CBA

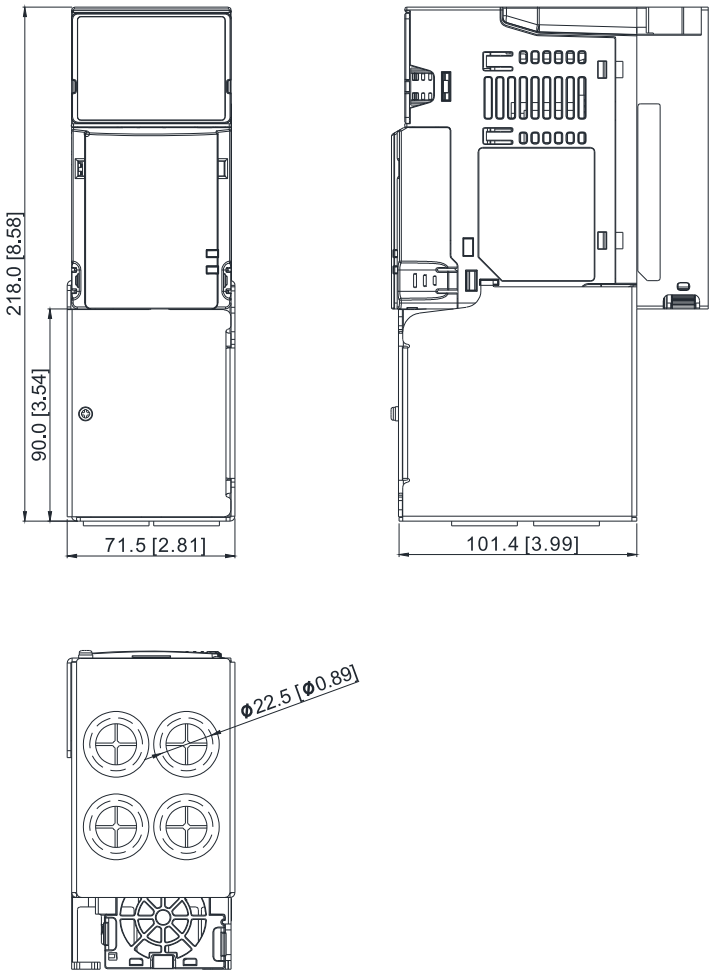

Unit: mm (inch)

Figure 7-50

Frame B

Conduit box model: MKM-CBB

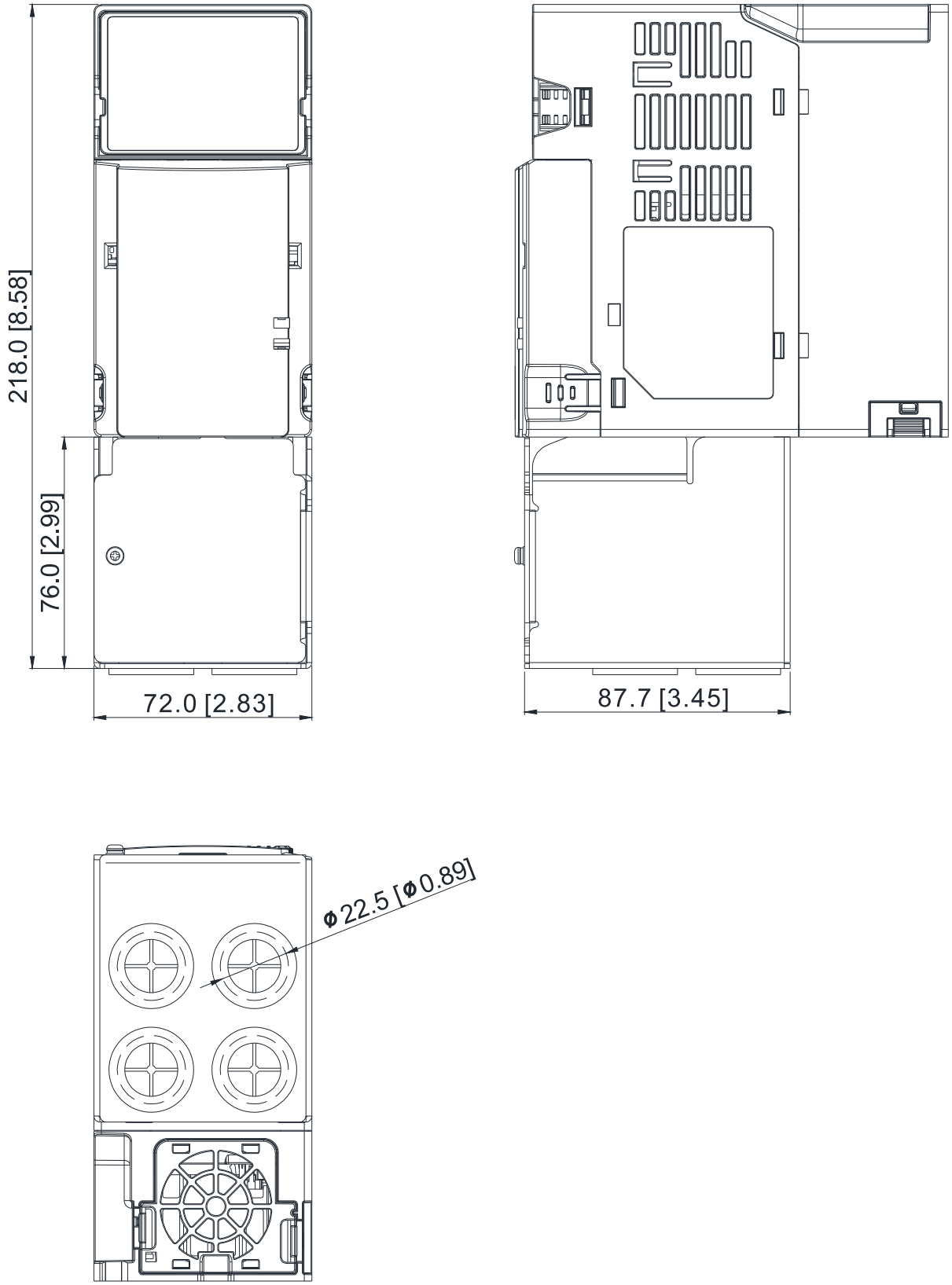

Unit: mm (inch)

Figure 7-51

Frame C

Conduit box model: MKM-CBC

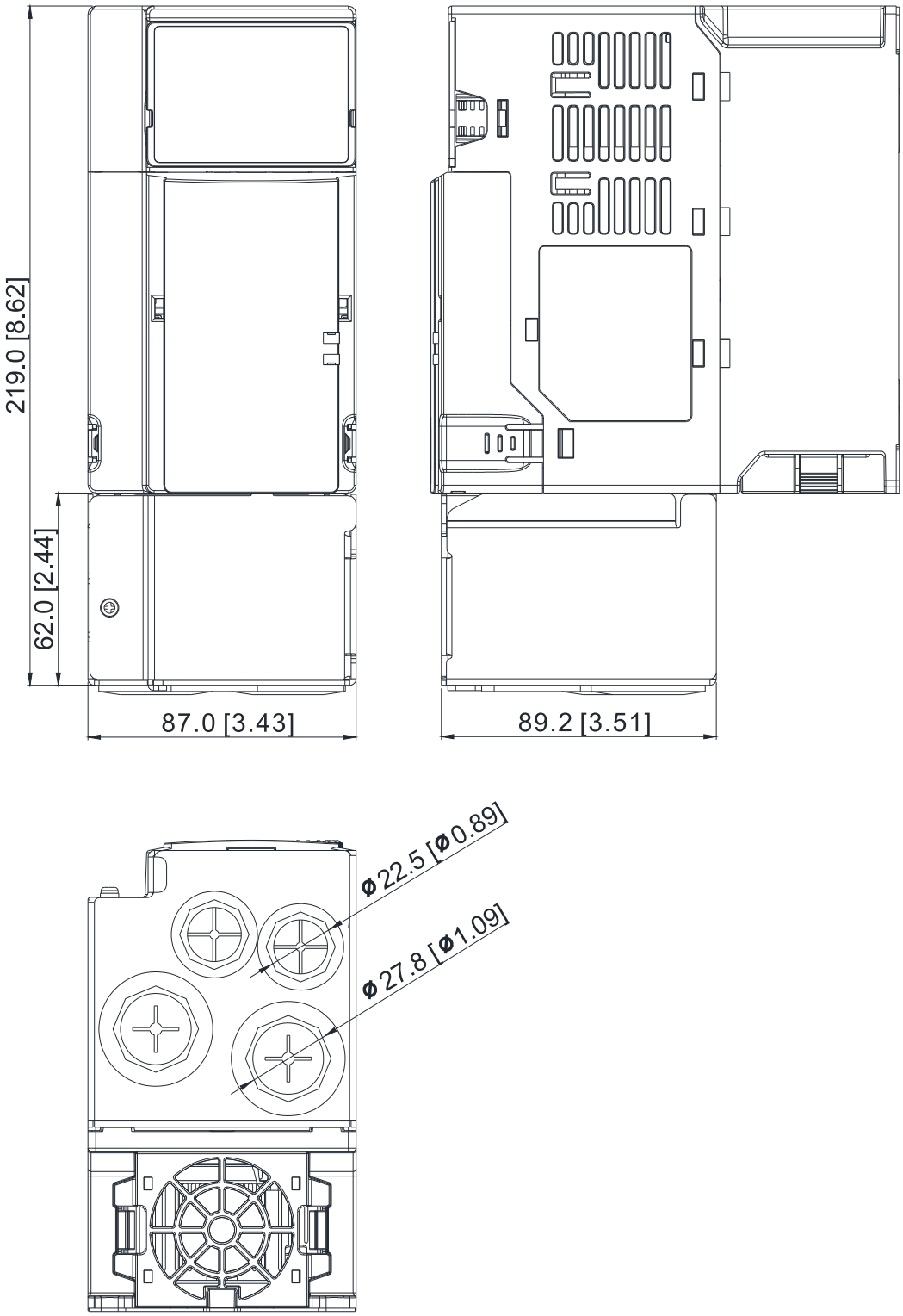

Unit: mm (inch)

Figure 7-52

Frame D

Conduit box model: MKM-CBD

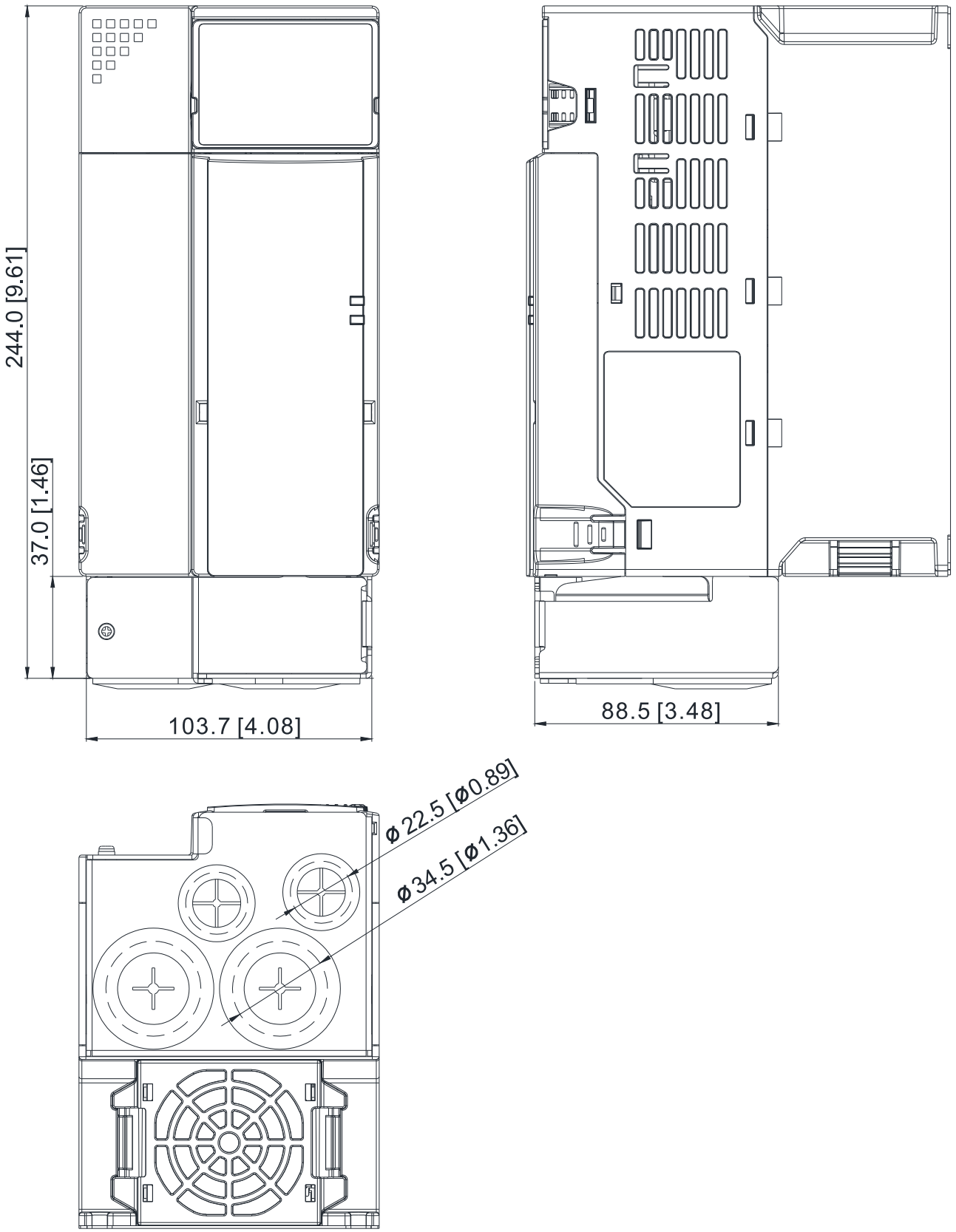

Unit: mm (inch)

Figure 7-53

Frame E

Conduit box model: MKM-CBE

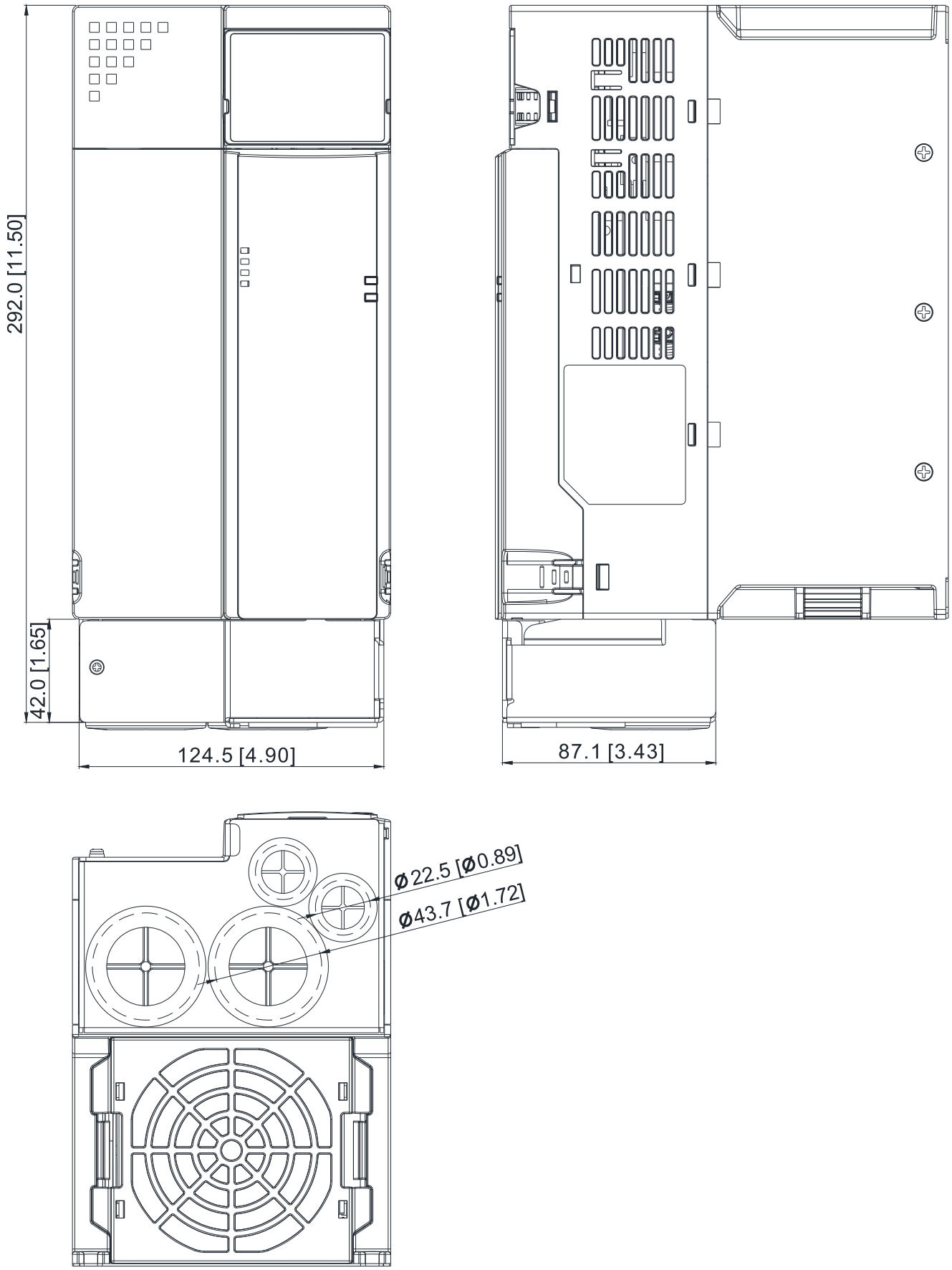

Unit: mm (inch)

Figure 7-54

Frame F

Conduit box model: MKM-CBF

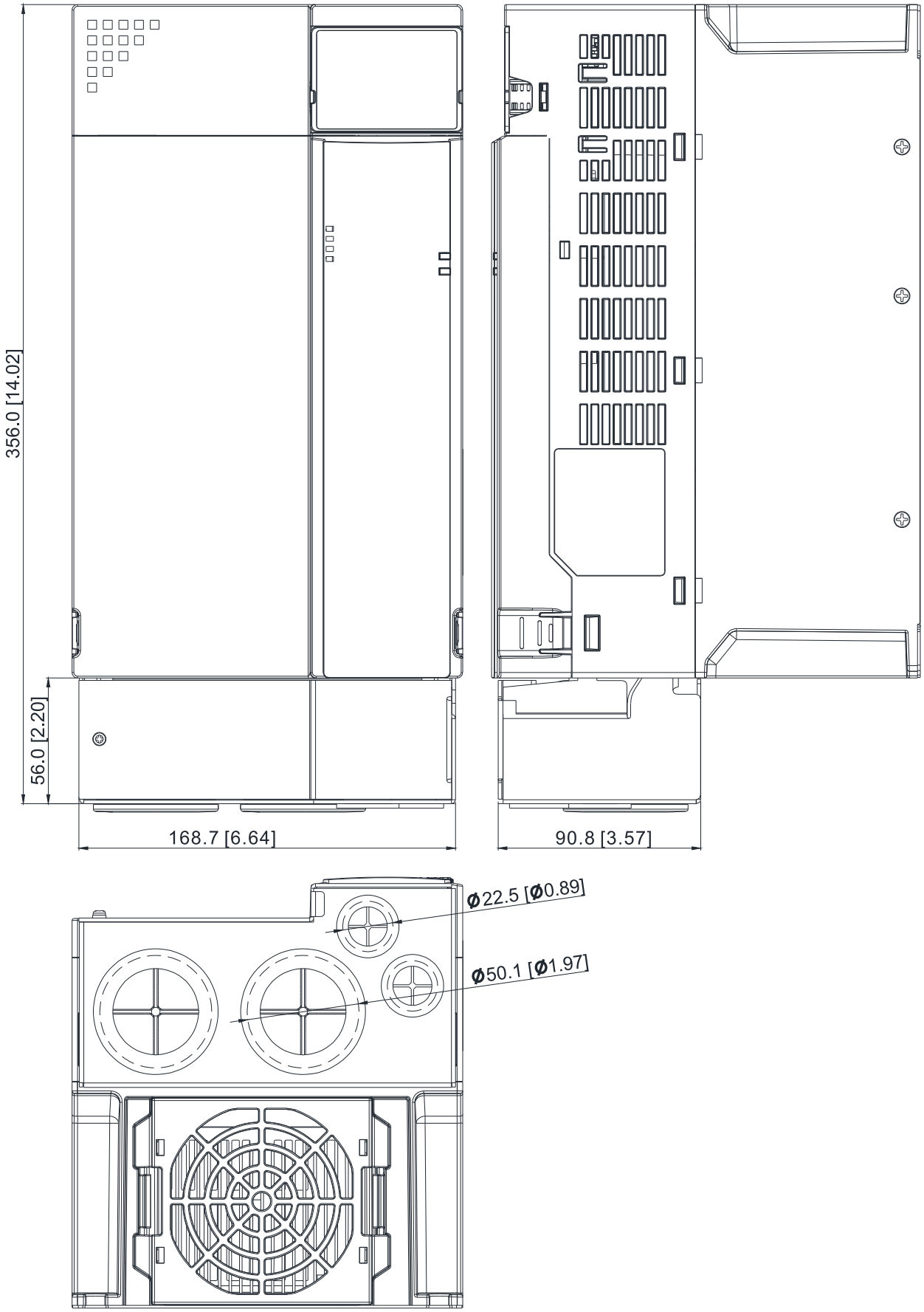

Unit: mm (inch)

Figure 7-55

Installation

Recommended screw size and torque value: M3: 4–6 kg-cm / (3.5–5.2 lb-in.) / (0.39–0.59 Nm)
M3.5: 4–6 kg-cm / (3.5–5.2 lb-in.) / (0.39–0.59 Nm)
M4: 6–8 kg-cm / (5.2–6.9 lb-in.) / (0.59–0.78 Nm)

Frame A

1) Aim the clips at the slots to assemble the conduit box. 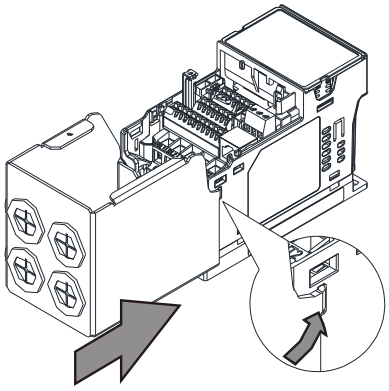 Figure 7-56	2) Tighten the screws to connect with the motor. 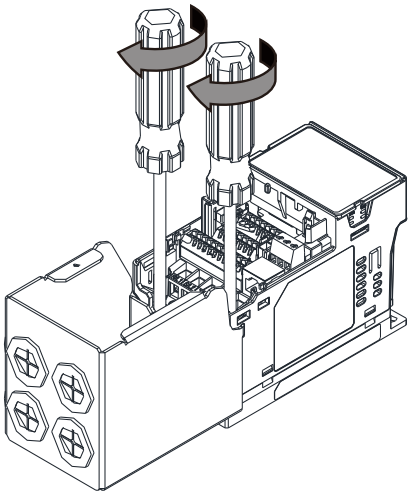 Figure 7-57
3) Install the front cover of the motor. 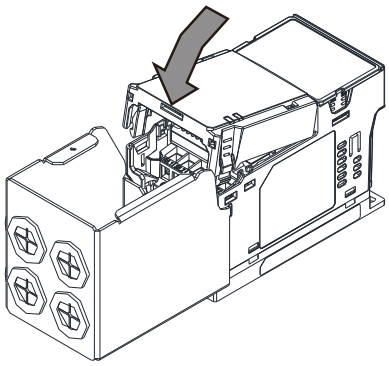 Figure 7-58	4) Install the front cover of the conduit box and tighten the screw. 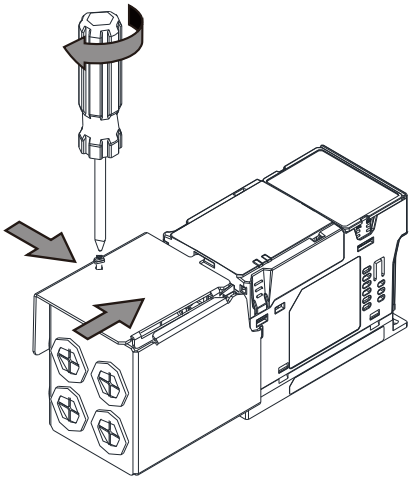 Figure 7-59
5) Attach the dust patch. 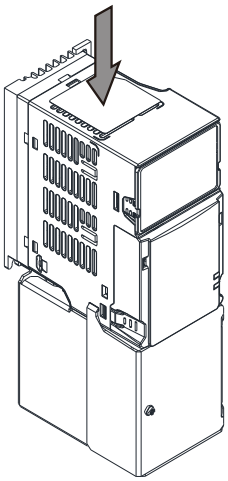 Figure 7-60	

Frame B–F

1) Aim the clips at the slots to assemble the conduit box.

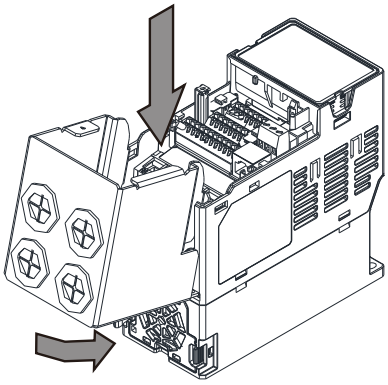

Figure 7-61

2) Tighten the screws to connect with the motor.

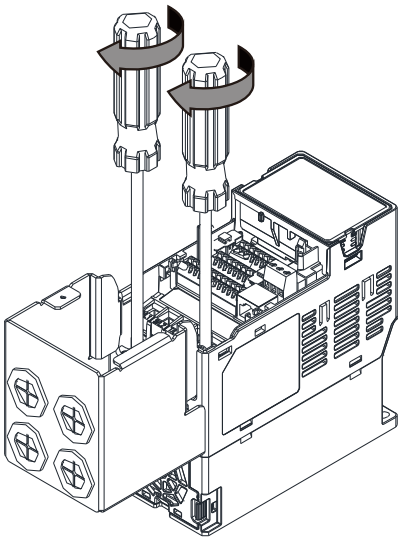

Figure 7-62

3) Install the front cover of the motor.

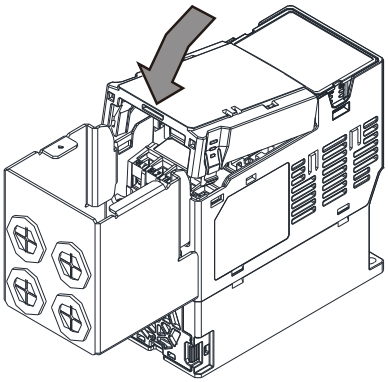

Figure 7-63

4) Install the front cover of the conduit box and tighten the screw.

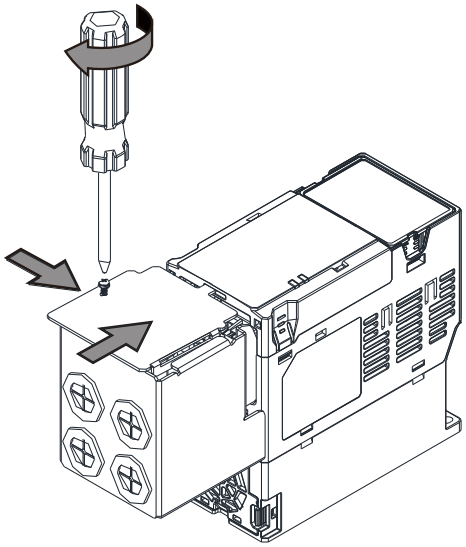

Figure 7-64

5) Attach the dust patch.

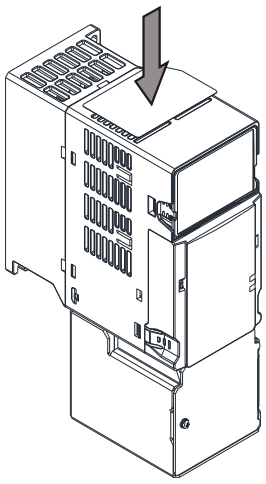

Figure 7-65

7-10 Fan Kit

Frame	Fan Model	Fan Kit
A	MKM-FKMA	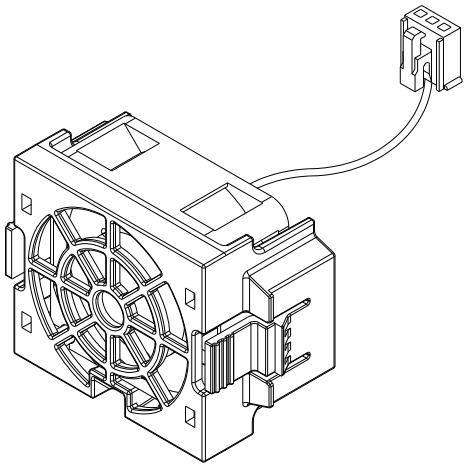 Figure 7-66
B	MKM-FKMB	
C	MKM-FKMC	
D	MKM-FKMD	
E	MKM-FKME	
F	MKM-FKMF	

Fan Removal

1. As shown in the figure below, press the tabs on both sides of the fan to remove it.

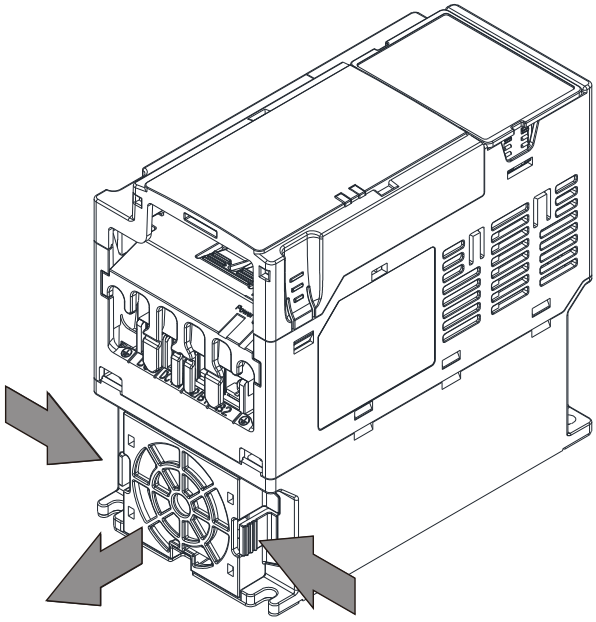

Figure 7-67

2. Disconnect the power cable while removing the fan.

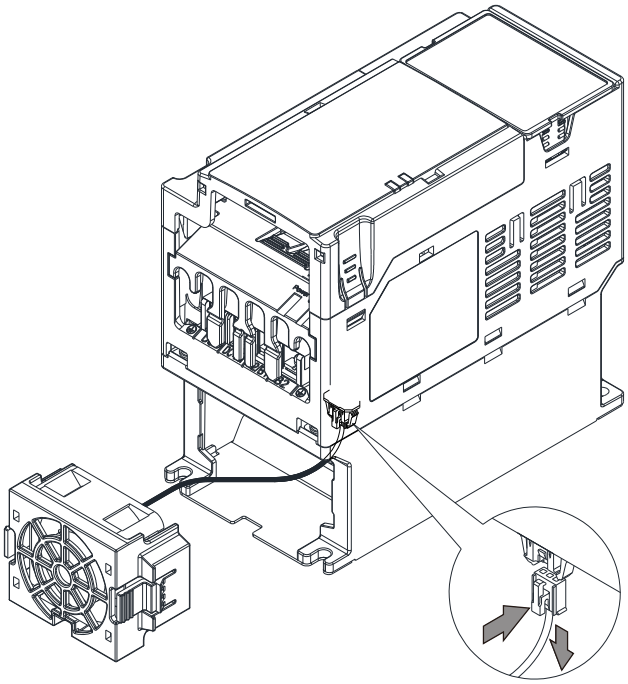

Figure 7-68

7-11 Keypad Panel Mounting

KPMS-LE01 Keypad Panel Mounting:

In order to avoid the motor damage, please be sure to refer to the screw size and torque values to tighten the screws.

1. Install the extension cable to motor:

Unit: mm (inch)

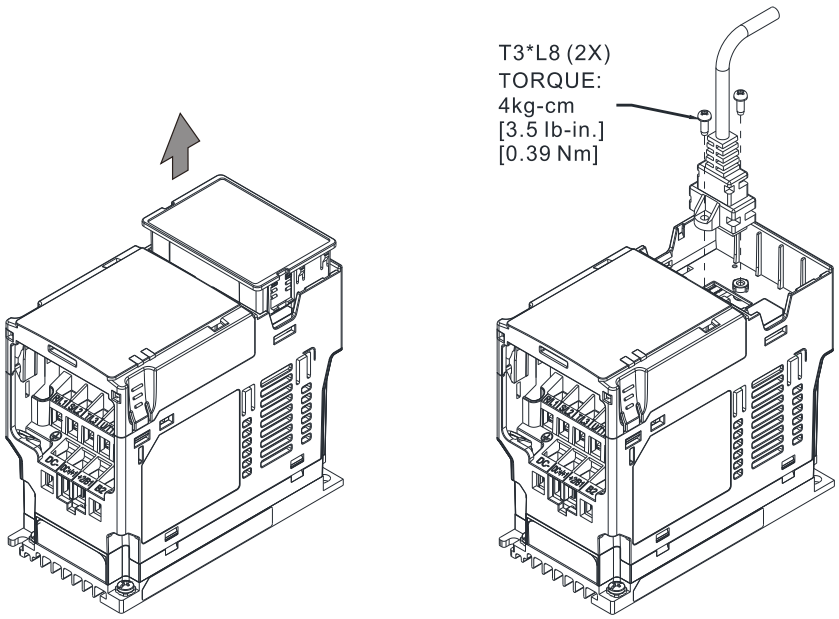

Figure 7-69

The extension cable models and cable length specifications are listed in the table below.

Models	EG0610C	EG1010C	EG2010C	EG3010C	EG5010C
Extension Cable Length (Unit: mm (inch))	600 (23.62)	1000 (39.37)	2000 (78.74)	3000 (118.11)	5000 (196.85)

Table 7-54

2. Method 1: Direct mounting on a plate

Unit: mm (inch)

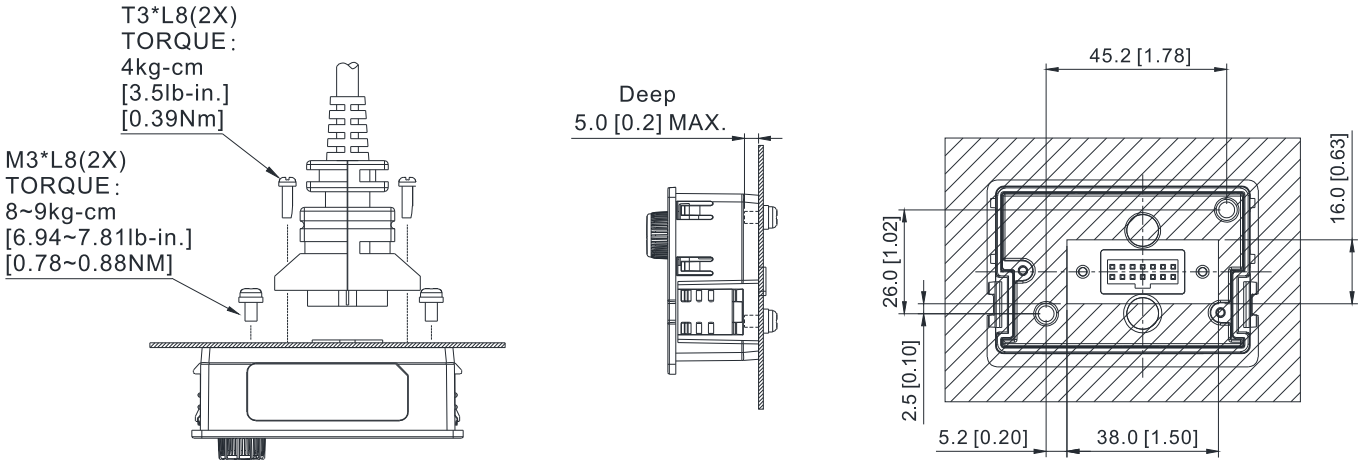

Figure 7-70

3. Method 2: Mounting through a plate

   Plate Thickness = 1.2 (0.05) or 2.0 (0.08)

Unit: mm (inch)

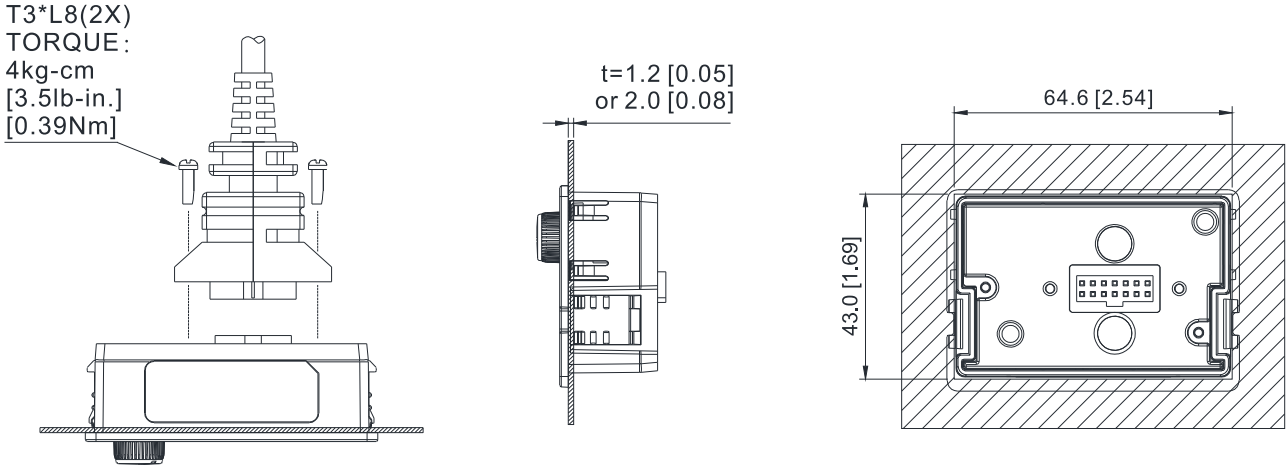

Figure 7-71

7-12 DIN-Rail Mounting

MKM-DRB (Applicable for Frame A and Frame B)

Screw	Torque
M4*2PCS	8–10 kg-cm (6.9–8.7 lb-in.) (0.78–0.98 Nm)

Table 7-55

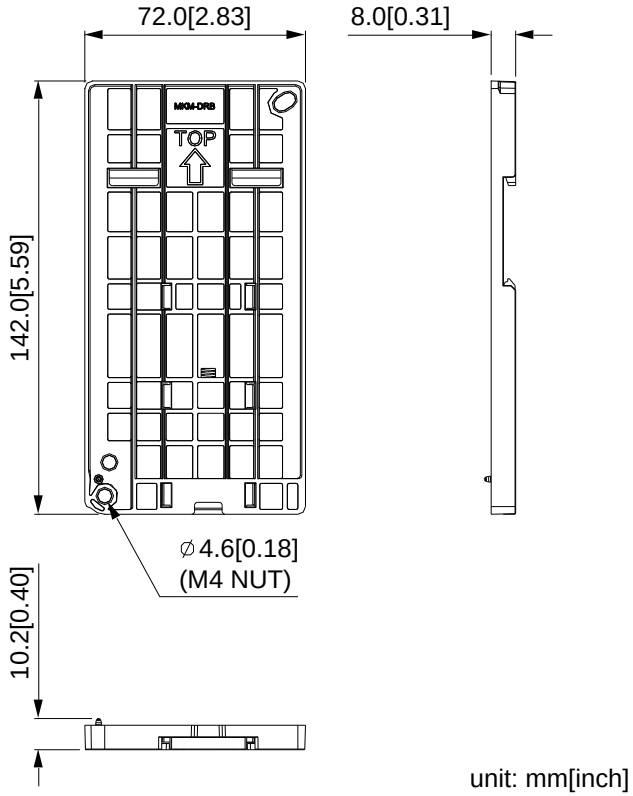

Figure 7-72

MKM-DRC (Applicable for Frame C)

Screw	Torque
M5*4PCS	10–12 kg-cm (8.7–10.4 lb-in.) (0.98–1.18 Nm)

Table 7-56

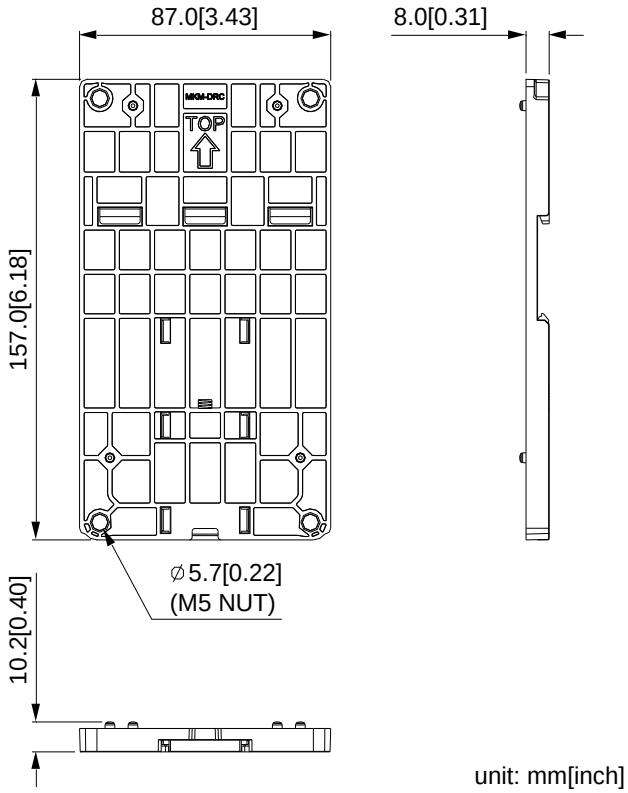

Figure 7-73

Installation

Model	Screw	Torque
MKM-DRB	M4*P0.7*2PCS	8–10 kg-cm / (6.9–8.7 lb-in.) / (0.78–0.98 Nm)
MKM-DRC	M5*P0.8*4PCS	10–12 kg-cm / (8.7–10.4 lb-in.) / (0.98–1.18 Nm)

Table 7-57

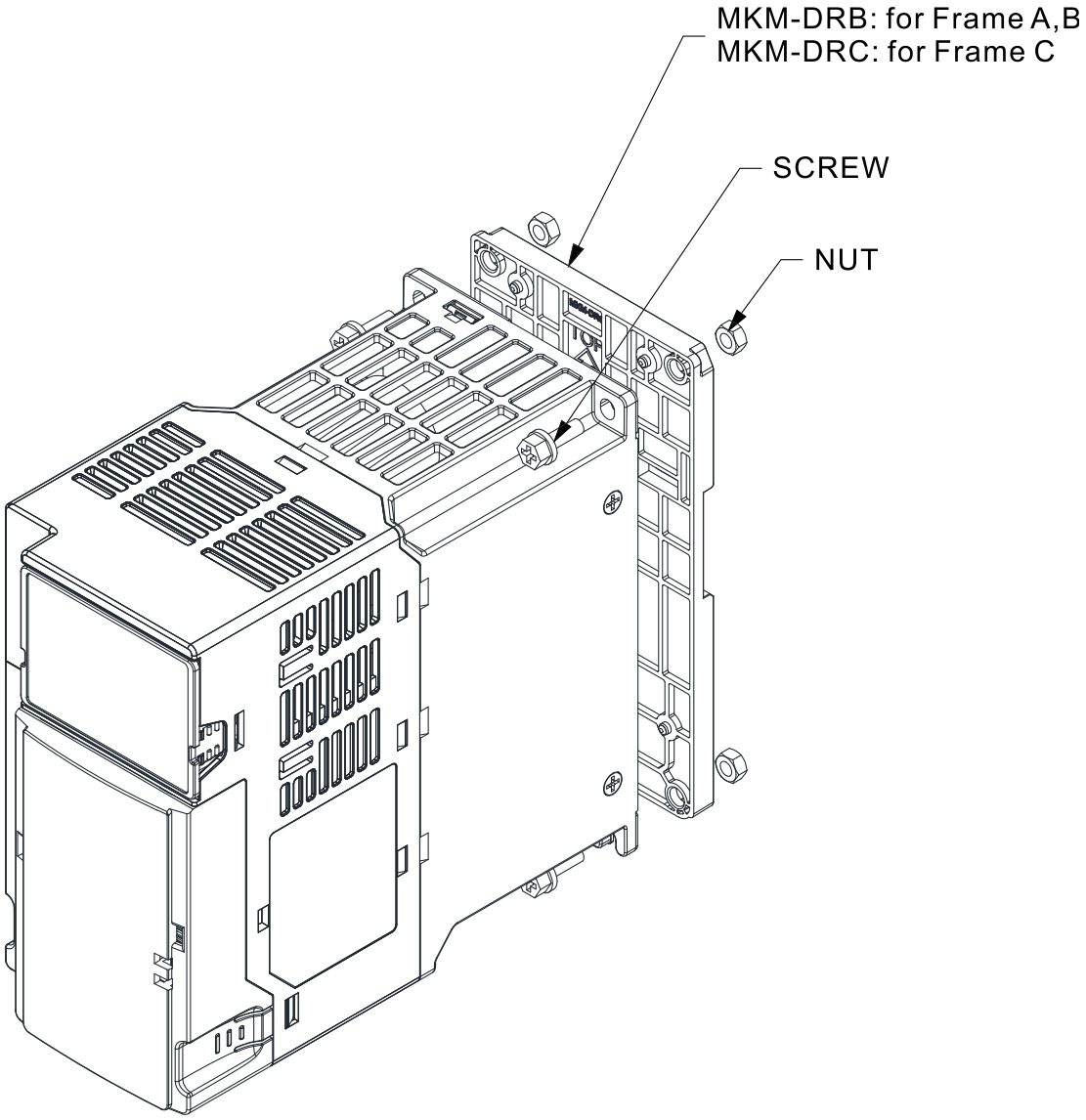

Figure 7-74

7-13 Mounting Adapter Plate

The mounting adapter plate is to change the wiring method for the ME300 / MS300 / MH300 series to provide you a flexible installation. It changes the wiring method from the “bottom-mains input/ bottom-motor output" to the “top-mains input/bottom-motor output" for ME300 / MS300 / MH300. Therefore, you can use the mounting adapter plate to change the drive from VFD-E/VFD-EL series to ME300/ MS300/MH300 series without changing the original wiring method and fixing hole. The following table shows the correspondences.

Series / Models	ME / MS / MH300	VFD-E	VFD-EL
MKM-MAPB	Frame A–B	Frame A	Frame A
MKM-MAPC	Frame C	Frame B	Frame B

Table 7-58

MKM-MAPB: Applicable for Frame A and B

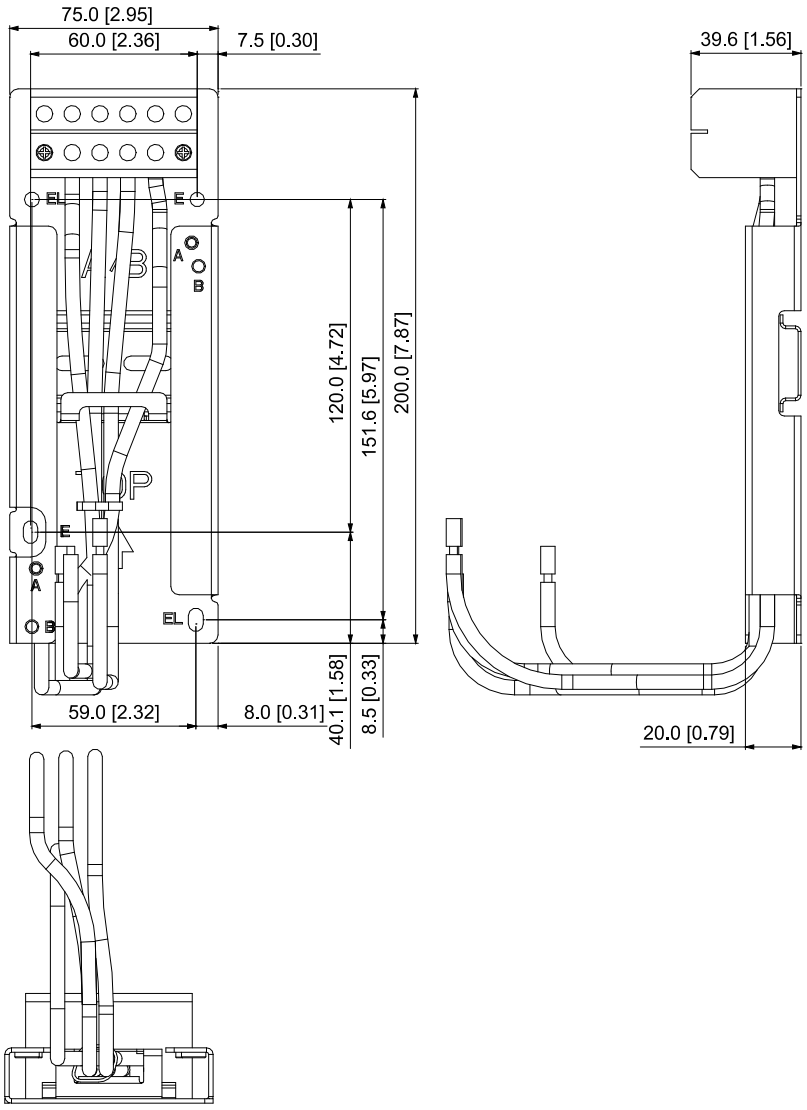

Unit: mm (inch)

Figure 7-75

MKM-MAPC: Applicable for Frame C

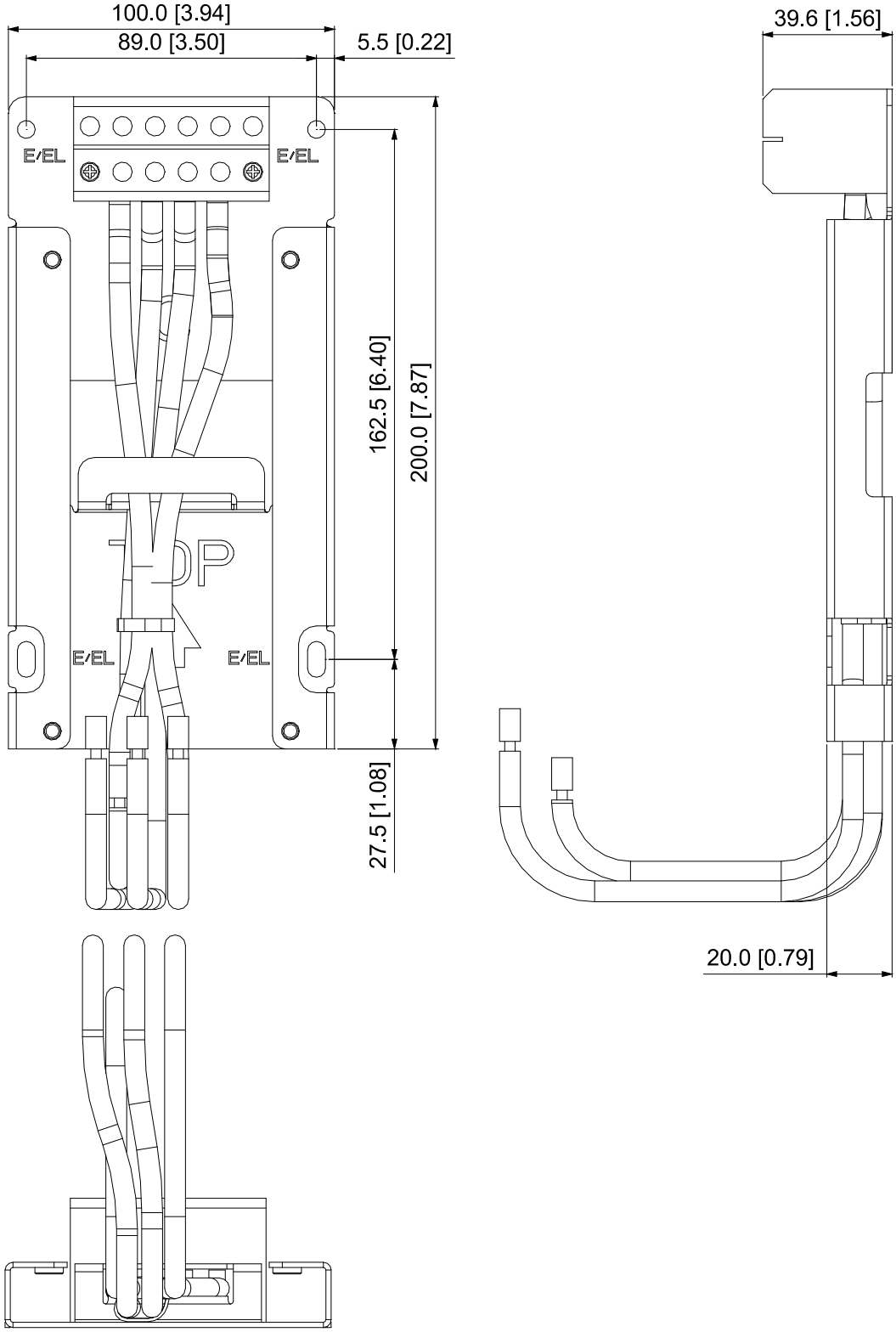

Unit: mm (inch)

Figure 7-76

Installation

Frame A and B

Screw	Torque
M4	14–16 kg-cm / (12.4–13.9 lb-in.) / (1.37–1.57 Nm)
M5	16–20 kg-cm / (13.9–17.4 lb-in.) / (1.57–1.96 Nm)

Table 7-59

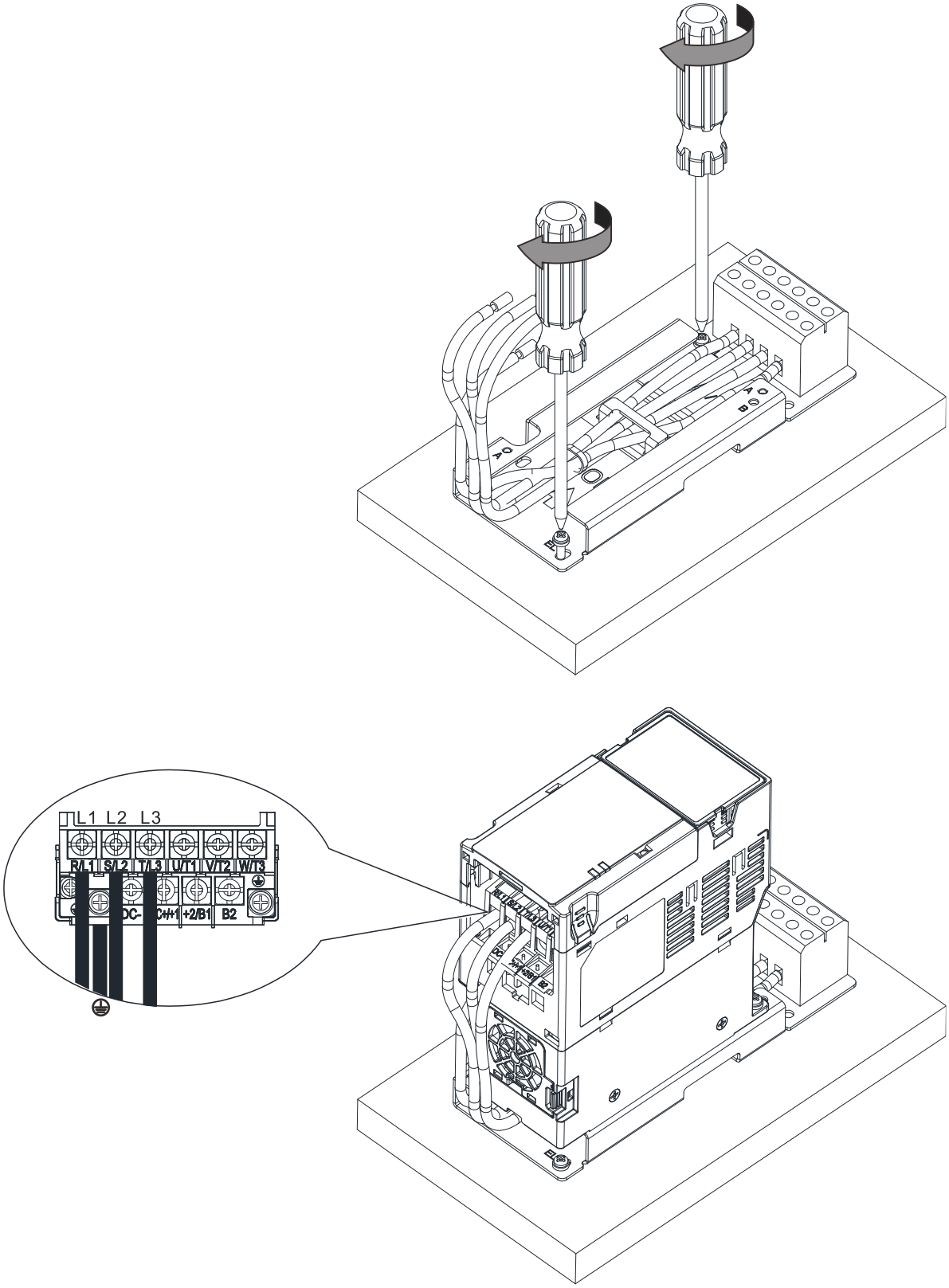

Figure 7-77

Frame C

Screw	Torque
M4	14–16 kg-cm / (12.4–13.9 lb-in.) / (1.37–1.57 Nm)
M5	16–20 kg-cm / (13.9–17.4 lb-in.) / (1.57–1.96 Nm)

Table 7-60

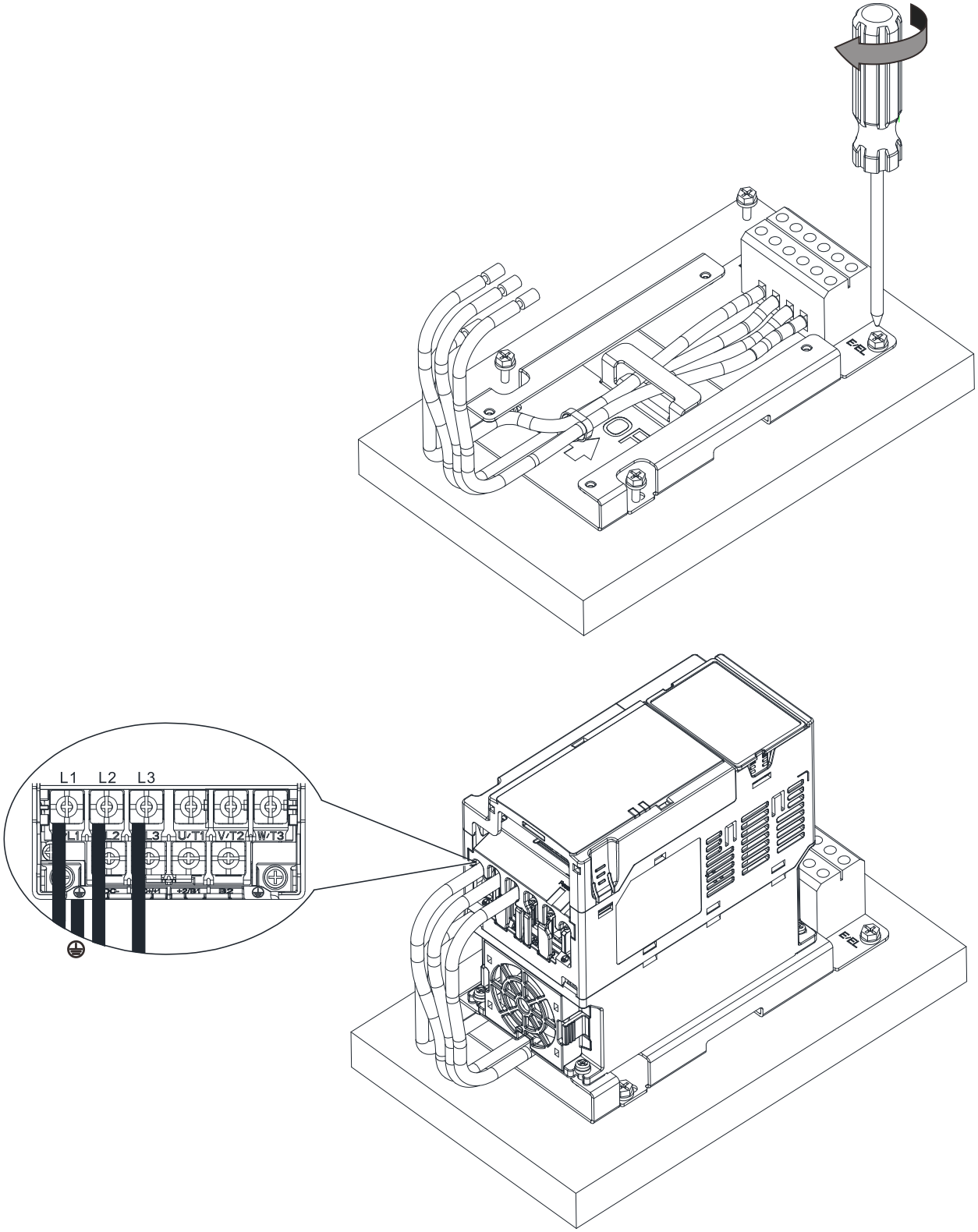

Figure 7-78

7-14 Digital Keypad - KPC-CC01

7-14-1 Digital Keypad KPC-CC01

The default communication protocol for MS300 is ASCII 9600, 7, N, 2, but the communication protocol for KPC-CC01 is RTU 19200, 8, N, 2. Therefore, you must set MS300 communication parameters so as to connect with the digital keypad KPC-CC01. The setting steps are as follows:

- Set Pr.09-00 communication address = 1
- Set Pr.09-01 COM1 transmission speed (Baud rate) = 19.2 Kbps
- Set Pr.09-04 COM1 communication protocol = 13: 8N2 (RTU)

When using MS300 firmware version is v2.01 or later versions and the KPC-CC01 firmware version is v1.46 or later versions, the communication will be set up automatically when MS300 is connected to the digital keypad KPC-CC01, therefore, it is no need to set relevant parameters manually.

KPC-CC01

Communication Interface:
RJ45 (socket), RS-485 interface

Communication protocol:
RTU19200, 8, N, 2

Installation Method

☑ The embedded type can be installed flat on the surface of the control box. The front cover is waterproof.
☑ Buy a MKC-KPPK model for wall mounting or embedded mounting. Its protection level is IP66.
☑ The maximum RJ45 extension lead is 5 m (16 ft)
☑ This keypad can only be used on Delta's motor drive C2000 series, CH2000, CP2000, MS300, MH300 and ME300.

Keypad Function Descriptions

Key	Descriptions
RUN	Start Operation Key 1. Only valid when the source of operation command is the keypad. 2. Operates the AC motor drive by the function setting. The RUN LED will be ON. 3. Can be pressed repeatedly at the stop process.
STOP RESET	Stop Command Key. 1. This key has the highest priority when the command is from the keypad. 2. When it receives the STOP command, regardless of whether the AC motor drive is in operation or stop status, the AC motor drive executes the "STOP" command. 3. Use the RESET key to reset the drive after a fault occurs. 4. If you cannot reset after the error: a. The condition which triggers the fault is not cleared. After you clear the condition, you can then reset the fault. b. The drive is in fault status when powered on. After you clear the condition, restart and then you can reset the fault.

Key	Descriptions
FWD REV	Operation Direction Key 1. Only controls the operation direction, NOT the drive activation. FWD: forward, REV: reverse. 2. Refer to the LED descriptions for more details.
ENTER	ENTER Key Goes to the next menu level. If at the last level, press ENTER to execute the command.
ESC	ESC Key Leaves the current menu and returns to the previous menu; also functions as a return key or cancel key in a sub-menu.
MENU	Returns to the main menu. Menu commands: 1. Parameter Setup 7. Language Setup 13. Start-up Menu 2. Quick Start 8. Time Setup 14. Main Page 3. Application Selection List 9. Keypad Locked 15. PC Link 4. Changed List 10. PLC Function 16. Start Wizard 5. Copy Parameter 11. Copy PLC 6. Fault Record 12. Display Setup
< > ^ v	Direction: Left / Right / Up / Down 1. In the numeric value setting mode, moves the cursor and changes the numeric value. 2. In the menu/text selection mode, selects an item.
F1 F2 F3 F4	Function Key 1. The functions keys have defaults and can also be user-defined. The defaults for F1 and F4 work with the function list below. For example, F1 is the JOG function, and F4 is a speed setting key for adding/deleting user-defined parameters. 2. Other functions must be defined using TPEditor. Download TPEditor software at Delta website. Select TPEditor version 1.60 or later. Refer to the installation instruction for TPEditor in Section 7-14-3.
HAND	HAND Key 1. Use this key to select HAND mode. In this mode, the drive's parameter settings for frequency command source is Pr.00-30, and that for operation command source is Pr.00-31. 2. Press the HAND key at STOP, then the setting switches to the HAND frequency source and HAND operation source. 3. Press HAND key at RUN, and it stops the AC motor drive first (displays AHSP warning), and switches to HAND frequency source and HAND operation source. 4. Successful mode switching for the KPC-CC01 displays HAND mode on the screen.
AUTO	AUTO Key 1. The default of the drive is AUTO mode. 2. Use this key to select AUTO mode. In this mode, the drive's parameter settings for frequency command source is Pr.00-20, and for operation command is Pr.00-21.

Key	Descriptions
	3. Press the AUTO key at STOP, then the setting switches to the AUTO frequency source and AUTO operation source. 4. Press AUTO key at RUN, and it stops the AC motor drive first (displays AHSP warning), and switches to AUTO frequency source and AUTO operation source. 5. Successful mode switching for the KPC-CC01 displays AUTO mode on the screen

NOTE: The defaults for the frequency command and operation command source of HAND / AUTO mode are both from the keypad.

LED Function Descriptions

LED	Descriptions
STOP RESET	Steady ON: STOP indicator for the AC motor drive. Blinking: the drive is in standby. Steady OFF: the drive does not execute the STOP command.
FWD REV	Operation Direction LED 1. Green light: the drive is running forward. 2. Red light: the drive is running backward. 3. Flashing light: the drive is changing direction. Operation Direction LED under Torque Mode 1. Green light: when the torque command ≥ 0, and the motor is running forward. 2. Red light: when the torque command < 0, and the motor is running backward. 3. Twinkling light: when the torque command < 0, and the motor is running forward.
CANopen–RUN	RUN LED:

LED Status	Condition/ State
OFF	CANopen at initial No LED
Blinking	CANopen at pre-operation 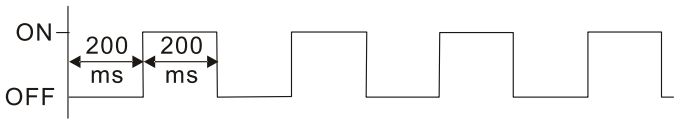
Single Flash	CANopen at stopped 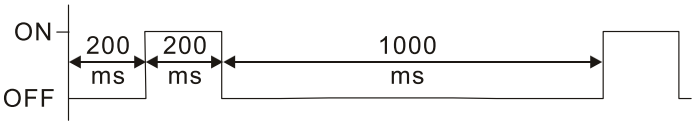
ON	CANopen at operation status

LED	Descriptions
CANopen–ERR	ERR LED:

LED status	Condition/ State
OFF	No Error
Single Flash	At least one packet of CANopen is in failure 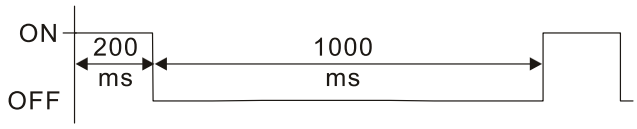
Double Flash	Node guarding failure or heartbeat message failure 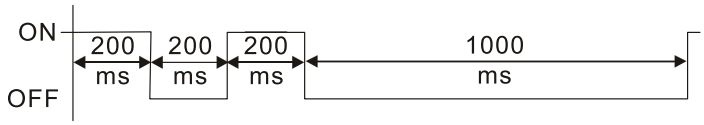
Triple Flash	Synchronization failure 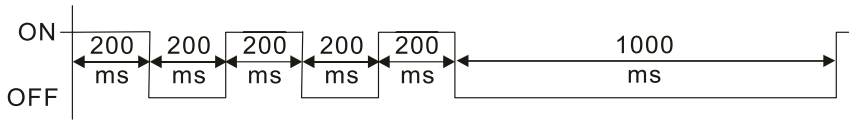
ON	Bus off

7-14-2 Function of Digital Keypad KPC-CC01

POWER ON

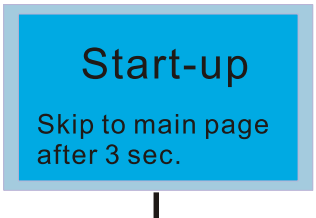

1) The default Start-up page is Delta Logo. (Default 1 and 2)
2) User can customize their start-up page through the edited function. (Need to purchase the optional accessories.)

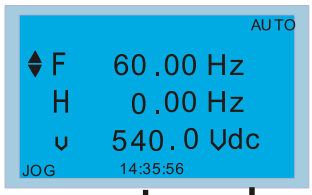

→ The top line of LCD displays the status of drive.

After you select the main menu, the start-up screen displays in the user-defined format. The page on the left shows the Delta default setting.

→ The bottom line of LCD displays time and JOG.

Press once

Press again

Press again

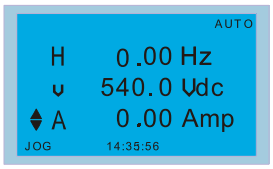

Press MENU

MENU

1: Parameter Setup
2: Quick Start
3: Application Selection List
4: Changed List
5: Copy Parameter
6: Fault Record
7: Language Setup
8: Time Setup
9: Keypad Locked
10: PLC Function
11: Copy PLC
12: Display Setup
13: Start-up Menu
14: Main Page
15: PC Link
16: Start Wizard

NOTE:

1. Start-up screen can only display pictures, not animation.
2. When powered ON, it displays the start-up screen then the main screen. The main screen displays Delta's default setting F/H/A/U. You can set the display order with Pr.00-03 (Start-up display). When you select the U screen, use the left/right keys to switch between the items, and set the display order for the U screen with Pr.00-04 (User display).

Display Icons

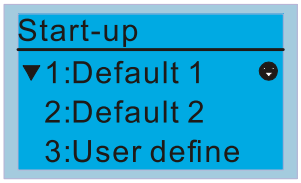

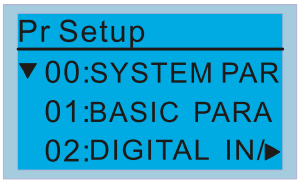

● : present setting

▼ : Scroll down the page for more options

Press ^ v for more options

▶ : show complete sentence

Press < > for complete information

Display items

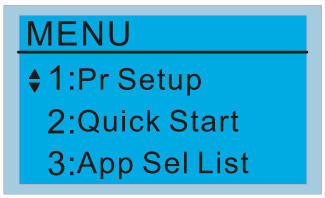

MENU

1: Parameter Setup
2: Quick Start
3: Application Selection List
4: Changed List
5: Copy Parameter
6: Fault Record
7: Language Setup
8: Time Setup
9: Keypad Locked
10: PLC Function
11: Copy PLC
12: Display Setup
13: Start-up Menu
14: Main Page
15: PC Link
16: Start Wizard

1. Parameter Setup

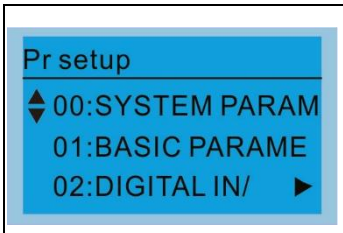

Press ENTER to select.

Press ^ v to select the parameter group.

Once you select a parameter group, press ENTER to go into that group.

Example: Setup source for the master frequency command.

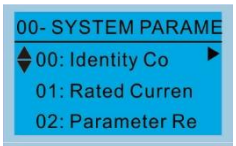

In the Group 00 Motor Drive Parameter, use the Up/Down keys to select parameter 20: Auto Frequency Command.

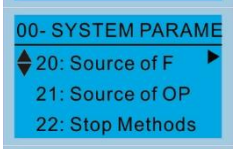

Press ENTER to go to this parameter's setting menu.

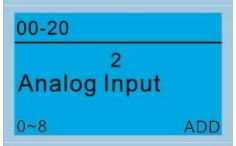

Use the Up/Down keys to choose a setting.
For example: choose 2 Analog Input, and then press ENTER key.

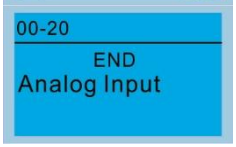

After you press ENTER, END is displayed which means that the parameter setting is done.

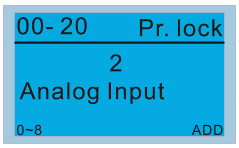

NOTE: When parameter lock / password protection function is enabled, it displays "Pr. lock" on the upper right corner of the keypad. The parameter cannot be written or is protected by the password under this circumstances.

2. Quick Start

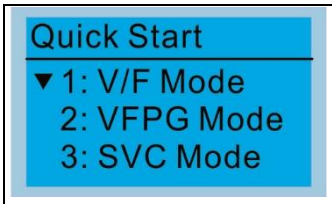

Press ENTER to select.

Quick Start:
1. V/F Mode
2. SVC Mode
3. My Mode

1. VF Mode

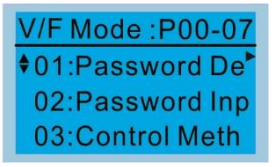

01:Password Decoder

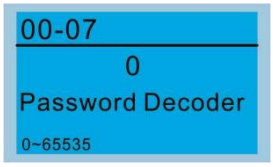

Items
1. Parameter protection password input (Pr.00-07)
2. Parameter protection password setting (Pr.00-08)
3. Control mode (Pr.00-10)
4. Speed control mode (Pr.00-11)
5. Load selection (Pr.00-16)
6. Carrier frequency (Pr.00-17)
7. Master frequency command (AUTO) source (Pr.00-20)
8. Operation command (AUTO) source (Pr.00-21)
9. Stop method (Pr.00-22)
10. Digital keypad STOP function (Pr.00-32)
11. Max. operation frequency (Pr.01-00)
12. Output frequency of motor 1 (Pr.01-01)
13. Output voltage of motor 1 (Pr.01-02)
14. Mid-point frequency 1 of motor 1 (Pr.01-03)
15. Mid-point voltage 1 of motor 1 (Pr.01-04)
16. Mid-point frequency 2 of motor 1 (Pr.01-05)
17. Mid-point voltage 2 of motor 1 (Pr.01-06)
18. Min. output frequency of motor 1 (Pr.01-07)
19. Min. output voltage of motor 1 (Pr.01-08)
20. Output frequency upper limit (Pr.01-10)
21. Output frequency lower limit (Pr.01-11)
22. Acceleration time 1 (Pr.01-12)
23. Deceleration time 1 (Pr.01-13)
24. Over-voltage stall prevention (Pr.06-01)
25. Derating protection (Pr.06-55)
26. Software brake level (Pr.07-00)
27. Speed tracking during start-up (Pr.07-12)
28. Emergency stop (EF) & force to stop selection (Pr.07-20)
29. Torque command filter time (Pr.07-24)

30. Slip compensation filter time (Pr.07-25)
31. Torque compensation gain (Pr.07-26)
32. Slip Compensation Gain (Pr.07-27)

2. SVC Mode

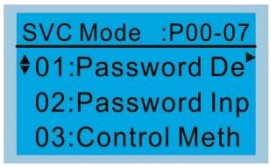

01: Password Decoder

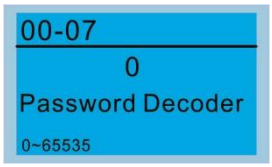

Items
1. Parameter protection password input (Pr.00-07)
2. Parameter protection password setting (Pr.00-08)
3. Control mode (Pr.00-10)
4. Speed control mode (Pr.00-11)
5. Load selection (Pr.00-16)
6. Carrier frequency (Pr.00-17)
7. Master frequency command (AUTO) source (Pr.00-20)
8. Operation command (AUTO) source (Pr.00-21)
9. Stop method (Pr.00-22)
10. Digital keypad STOP function (Pr.00-32)
11. Max. operation frequency (Pr.01-00)
12. Output frequency of motor 1 (Pr.01-01)
13. Output voltage setting of motor 1 (Pr.01-02)
14. Min. output frequency of motor 1 (Pr.01-07)
15. Min. output voltage of motor 1 (Pr.01-08)
16. Output frequency upper limit (Pr.01-10)
17. Output frequency lower limit (Pr.01-11)
18. Acceleration time 1 (Pr.01-12)
19. Deceleration time 1 (Pr.01-13)
20. Full-load current for induction motor 1 (Pr.05-01)
21. Rated power for induction motor 1 (Pr.05-02)
22. Rated speed for induction motor 1 (Pr.05-03)
23. Number of poles for induction motor 1 (Pr.05-04)
24. No-load current for induction motor 1 (Pr.05-05)
25. Over-voltage stall prevention (Pr.06-01)
26. Over-current stall prevention during acceleration (Pr.06-03)
27. Derating protection (Pr.06-55)
28. Software brake level (Pr.07-00)
29. Emergency stop (EF) & Force to stop selection (Pr.07-20)
30. Torque command filter time (Pr.07-24)
31. Slip compensation filter time (Pr.07-25)
32. Slip compensation gain (Pr.07-27)

3. My Mode

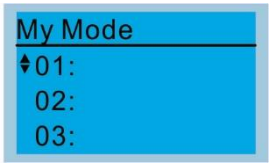

Press F4 in parameter setting screen to save the parameter to My Mode. To delete or correct the parameter, select this parameter and press F4 for DEL in the bottom right corner.

Items
You can save 01–32 sets of parameters (Pr).
Setup process
1. Go to Parameter Setup function. Press ENTER to select the parameter to use. There is an ADD in the bottom right corner of the screen. Press F4 to add this parameter to My Mode.

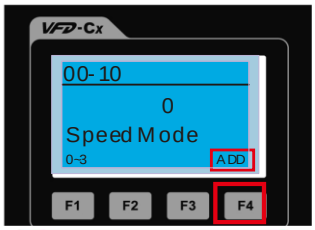

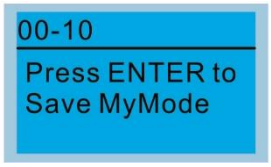

2. The parameter (Pr) displays in My mode if it is properly saved. To correct or to delete this parameter, press F4 for DEL.

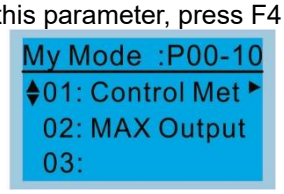

3. To delete a parameter, go to My Mode and select the parameter to delete.
   Press ENTER to enter the parameter setting screen. DEL appears in the bottom left corner of the screen. Press F4 to delete this parameter from My Mode.

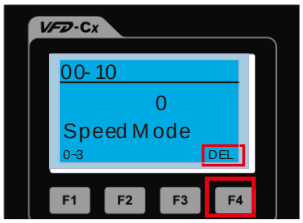

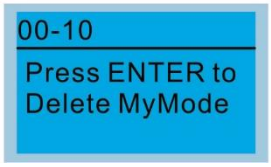

4. After you press ENTER to delete <01 Control Mode>, the <02 Maximum Operating Frequency > automatically replaces <01 Control Mode>.

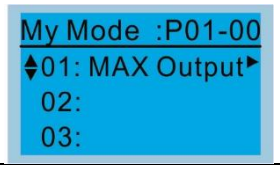

3. Application Selection List

App Sel List
No Function
List PrNum =000
ENTER or ESC

This function enables you to select application and its parameter sets.

Example:
In the menu content, select 3: Application Selection List

MENU
1:Pr Setup
2:Quick Start
3:App Sel List

Press ENTER to go into the Application Selection List

13-00
0
No Function
0~10

Select Application

13-00
3
Fan
0~10

Press ENTER to enter the application selection screen, and the selected application industry is “Fan”.

App Sel List
Fan
List PrNum =033
ENTER or ESC

Press ENTER to enter the Fan application screen.

Map to : P00-11
01: Velocity Mo
02: Load Selecti
03: Carrier FREQ

Press the Up/Down keys to select the parameter to set.

Map to : P00-11
01: Velocity Mo
02: Load Selecti
03: Carrier FREQ

Map to : P07-33
31: Momentary Po
32: Auto Restart
33: Reset Resta

00-16
0
Light duty
0~1

Select 0: Normal duty or 1: Heavy duty according to your needs, and then press ENTER.

4. Changed List

Changed List
Changed Pr
List PrNum =026
ENTER or ESC

This function records the parameters you have changed.
Example:
Set Pr.13-00 Application Selection = 3: Fan

13-00
0
No Function
0~10

13-00
3
Fan
0~10

Enter the changed list screen. List PrNum=026 means that there are 26 parameters that have been changed.

Changed List
Changed Pr
List PrNum =026
ENTER or ESC

Press ENTER to enter the changed list screen.

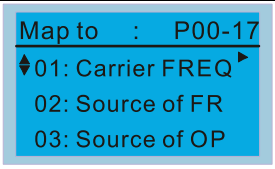

Use the Up / Down keys to select the parameters to check or to change.
Press ENTER to enter the parameter.

5. Copy Parameter

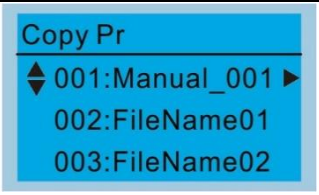

Press ENTER to go to 001–004 content storage

Four groups of parameters are available to copy.
The steps are shown in the example below.
Example: parameter saved in the motor drive.

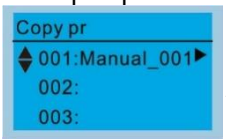

1. Go to Copy Parameter
2. Select the parameter group to copy and press ENTER.

1. Select 1: keypad →VFD.
2. Press ENTER to go to the “keypad→VFD” screen.

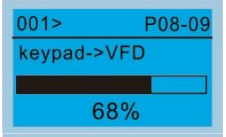

Begin copying parameters until it is done.

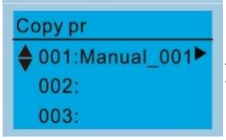

After copying is done, the keypad automatically returns to this screen.

Example: parameter saved in the keypad.

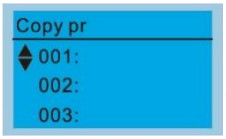

1. Go to Copy parameter
2. Select the parameter group to copy and press ENTER.

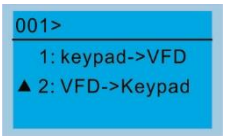

Press ENTER to go to the “VFD→keypad” screen.

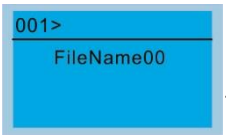

Press the Up / Down keys to select a symbol.
Press the Left / Right keys to move the cursor to select a file name.

String & Symbol Table:
! " # $ % & ' ( ) * + · - · / 0 1 2 3 4 5 6 7 8 9 : ; < = > ? @ A B C D E F G H I J K L M N O P Q R S T U V W X Y Z [\ ] ^ _ ' a b c d f g h i j k l m n o p q r s t u v w x y z { | } ~

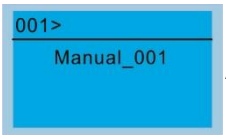

After you confirm the file name, press ENTER.

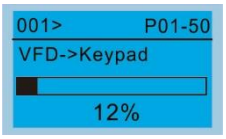

Begin copying parameters until it is done.

	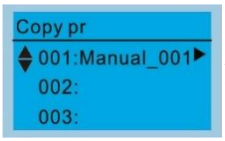 After copying is done, the keypad automatically returns to this screen. 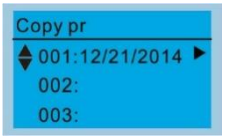 Press the Right key to see the date of the parameters copied. 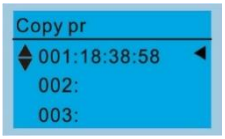 Press the Right key to see the time of the parameters copied.

6. Fault Record

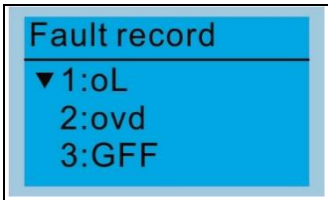 Press ENTER to see an error record's details.	Able to store 6 error codes (Keypad V1.02 and previous versions) Able to store 30 error codes (Keypad V1.20 and later version) The most recent error record shows as the first record. Choose an error record to see details such as date, time, frequency, current, voltage, and DC bus voltage. Press the Up / Down keys to select an error record. Press ENTER to see that error record's details. 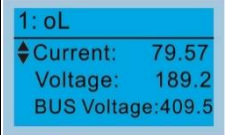 Press the Up / Down keys to scroll through an error record's details such as date, time, frequency, current, voltage, and DC bus voltage. Press ESC to return to the Fault record screen. Press the Up / Down keys to select the next error code. After selecting an error code, press ENTER to see that error record's details. 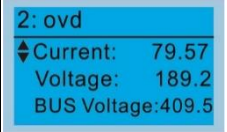 Press the Up / Down keys to see an error record's details such as date, time, frequency, current, voltage, and DC bus voltage. **NOTE:** The AC motor drive actions are recorded and saved to the KPC-CC01. When you remove the KPC-CC01 and connect it to another AC motor drive, the previous fault records are not deleted. The new fault records of the new AC motor drive continue to be added to the KPC-CC01.

7. Language Setup

 Press the Up / Down keys to select the language, and then press ENTER.	The language setting option is displayed in the language of your choice. Language setting options: 1. English 5. Русский 9. Polski 2. 繁體中文 6. Español 10. Deutsch 3. 简体中文 7. Português 11. Italiano 4. Türkçe 8. français 12. Svenska

8. Time Setup

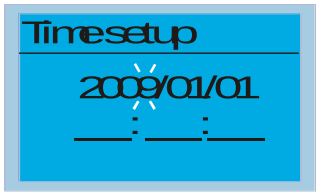

Press the Left / Right keys to select Year, Month, Day, Hour, Minute or Seconds to change.

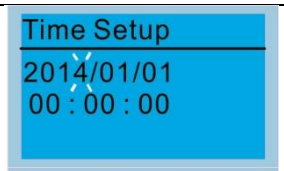

Press the Up / Down keys to set the Year

Press the Up / Down keys to set the Month

Press the Up / Down keys to set the Day

Press the Up / Down keys to set the Hour

Press the Up / Down keys to set the Minute

Press the Up / Down keys to set the Second

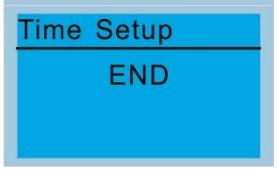

Press ENTER to confirm the Time Setup.

NOTE:

Limitation: The charging process for the keypad super capacitor finishes in about 6 minutes. **When the digital keypad is removed, the time setting is saved for 7 days**. After 7 days, you must reset the time.

9. Keypad Locked

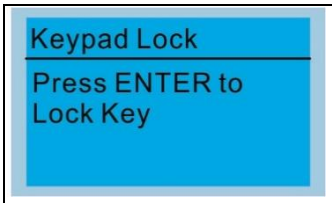

Press ENTER to lock

Lock the keypad

Use this function to lock the keypad. The main screen does not display “keypad locked” when the keypad is locked; however, it displays the message “Press ESC 3 sec to UnLock Key” when you press any key.

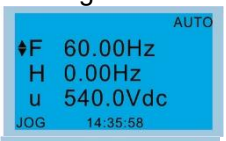

When the keypad is locked, the main screen does not indicate the lock status.

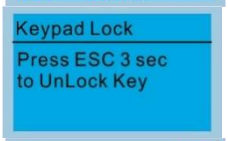

Press any key on the keypad; a message displays as shown on the left.

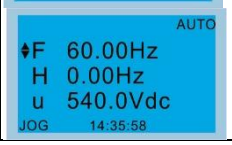

If you do not press the ESC key, the keypad automatically returns to this screen.

	Keypad Lock Press ESC 3 sec to UnLock Key	Press any key on the keypad; a message displays as shown on the left.
	AUTO F 60.00Hz H 0.00Hz u 540.0Vdc JOG 14:35:58	Press ESC for 3 seconds to unlock the keypad; the keypad returns to this screen. All keys on the keypad is functional. Turning the power off and on does not lock the keypad.

10. PLC Function

PLC 1.Disable 2.PLC Run 3.PLC Stop Press the Up/Down keys to select a PLC function, and then press ENTER.	When activating and stopping the PLC function (choosing 2: PLC Run or 3: PLC Stop), the PLC status displays on main screen (Delta default setting).	
	PLC 1.Disable 2.PLC Run 3.PLC Stop	Choose option 2: PLC Run to enable the PLC function.
	PLC/RUN AUTO F 60.00Hz H 0.00Hz u 540.0Vdc JOG 14:35:58	The default on the main screen displays the PLC / RUN status message.
	PLC 1.Disable 2.PLC Run 3.PLC Stop	Choose option 3: PLC Stop to disable the PLC function.
	PLC/STOP AUTO F 60.00Hz H 0.00Hz u 540.0Vdc JOG 14:35:58	The default on the main screen displays the PLC / STOP status message.
	PLC/STOP AUTO Warning PLFF Function defect	If the PLC program is not available in the control board, the PLFF warning displays when you choose option 2 or 3. In this case, choose option 1: Disable to clear PLFF warning.

11. Copy PLC

Copy PLC 001:Manual_001 002:FileName01 003:FileName02	Four groups of parameters are available to copy. The steps are shown in the example below. Example: PLC program saved in the motor drive.	
	Copy PLC 001:Manual_001 002: 003:	1. Go to Copy PLC 2. Select the PLC program to copy and press ENTER.
	001> 1: keypad->VFD 2: VFD->Keypad	1. Select 1: keypad→VFD. 2. Press ENTER to go to the “keypad→VFD” screen.
	001> 4170 keypad->VFD 34%	Begin copying the PLC program until it is done.
	Copy PLC 001:Manual_001 002: 003:	After copying is done, the keypad automatically returns to this screen.
	NOTE:	
	001> 0 ERR8 Type Mismatch	If you select “Option 1: keypad→VFD”, check if the PLC program is built-in to the KPC-CC01 keypad. If the PLC program is not available in the keypad when you select “Option 1: keypad→VFD”, an “ERR8 Warning: Type Mismatch” displays on the screen.

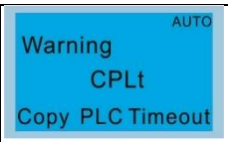

If you unplug the keypad and plug it back while copying the PLC program, the screen displays a CPLt warning.

Example: PLC program saved in the keypad.

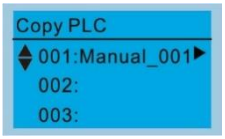

1. Go to Copy PLC.
2. Select the PLC program to copy and press ENTER.

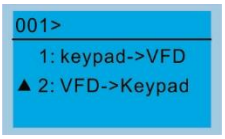

Press ENTER to go to the “VFD→keypad” screen.

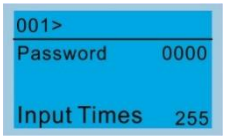

If the WPLSoft editor is installed and uses password, enter the password to save the file to the keypad.

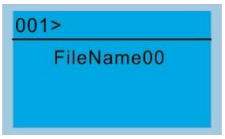

Press the Up/ Down keys to select a symbol.
Press the Left/ Right keys to move the cursor to select a file name.

String & Symbol Table:

! " # $ % & ' ( ) * + · - · / 0 1 2 3 4 5 6 7 8 9 : ; < = > ? @ A B C D E F G H I J K L M N O P Q R S T U V W X Y Z [\ ] ^ _ ' a b c d f g h i j k l m n o p q r s t u v w x y z { | } ~

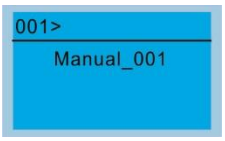

After you confirm the file name, press ENTER.

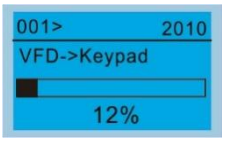

Begin copying the PLC program until it is done.

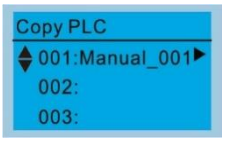

After copying is done, the keypad automatically returns to this screen.

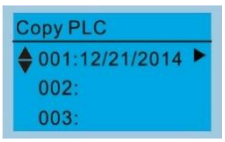

Press the Right key to see the date of the program copied.

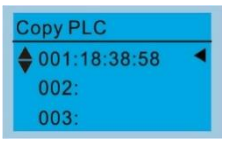

Press the Right key to see the time of the program copied.

12. Display setup

Press ENTER to go to the setting screen.

1. Contrast

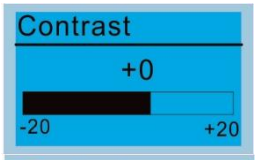

Press the Up / Down keys to adjust the setting value.

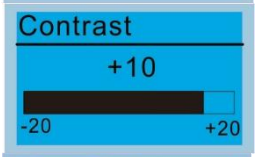

For example, increase Contrast to +10.

After you set the value, press ENTER to see the screen display after contrast is adjusted to +10.

Then press ENTER and decrease the Contrast to -10.

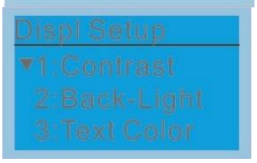

Press ENTER to see screen display after contrast is adjusted to -10.

2. Back-light

Press ENTER to go to the Back-Light Time Setting screen.

Press the Up / Down keys to adjust the setting value.

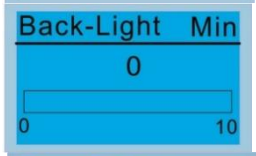

When the setting value is 0 Min, the backlight remains on.

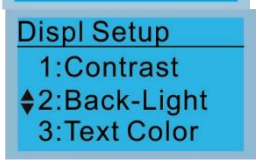

When the setting value is 10 Min, the backlight turns off in 10 minutes.

3. Text Color

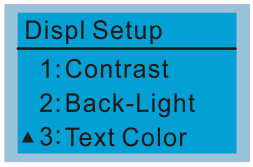

Press ENTER to go to the Text Color Setting screen.

The default value is White Text.

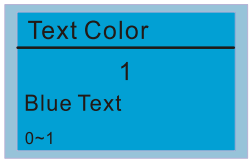

Press the Up / Down keys to adjust the setting value, and then press ENTER.

	The setting value changes to Blue Text.

13. Start-up

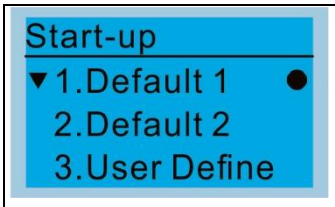	1. Default 1 DELTA LOGO 2. Default 2 DELTA Text 3. User Define: an optional accessory is required (TPEditor & USB / RS-485 Communication Interface-IFD6530) to design your own start-up screen. If the editor accessory is not installed, the User Define option displays a blank screen. USB/RS-485 Communication Interface-IFD6530 Refer to Chapter 07 Optional Accessories for more details. TPEditor: Download TPEditor software at Delta website. Select TPEditor version 1.60 or later. Refer to the installation instruction for TPEditor in Section 7-14-3.

14. Main page

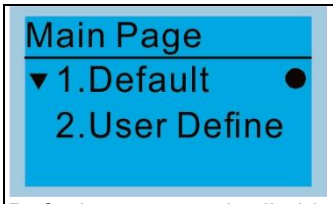 Default screen and editable screen are available. Press ENTER to select.	1. Default page 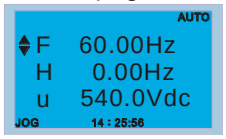 F 60.00Hz >>> H >>> A >>> U (options rotate) 2. User Define: an optional accessory is required (TPEditor & USB / RS-485 Communication Interface-IFD6530) to design your own main screen. If the editor accessory is not installed, the User Define option displays a blank screen. 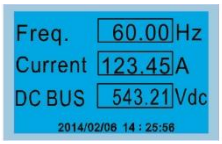 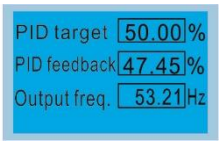 USB/RS-485 Communication Interface-IFD6530 Refer to Chapter 07 Optional Accessories for more details. TPEditor Download TPEditor software at Delta website. Select TPEditor version 1.60 or later. Refer to the installation instruction for TPEditor in Section 7-14-3.

15. PC Link

1. TPEditor: This function enables you to connect the keypad to a computer then download and edit user-defined screens.

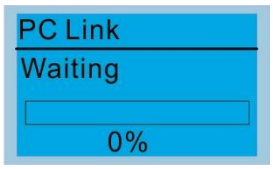

Press ENTER to go to Waiting to connect to PC screen.

In TPEditor, from the **Communication** menu, choose **Write to HMI**.

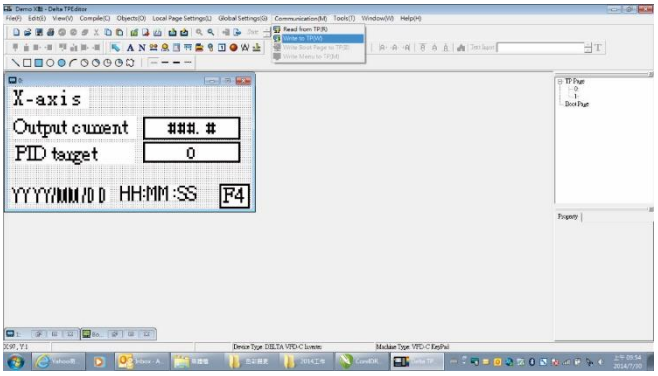

In the **Confirm** message box, click **YES**.

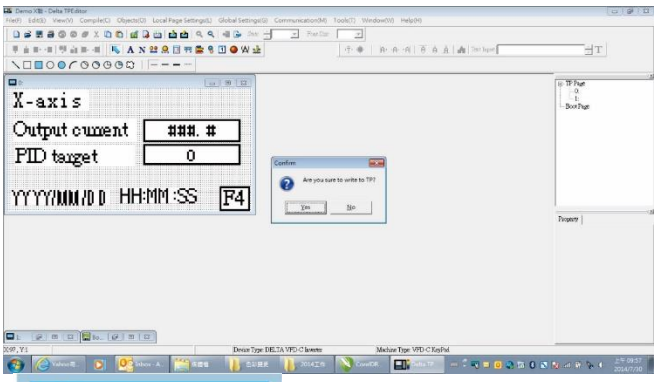

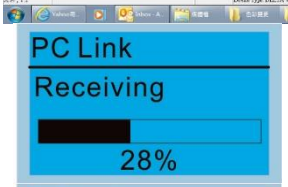

The software starts downloading screens to edit to the KPC-CC01.

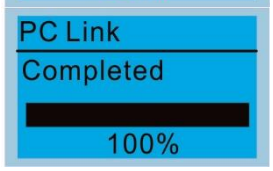

Download completed.

2. VFDSoft: This function enables you to link to the VFDSoft then upload the parameters 1–4 you have saved in the KPC-CC01.
NOTE: If the Operation System (OS) of your computer is Windows 10, right-click the VFDSoft icon to enter the **Property**. Then, click the **Compatibility** tab and select the **Run the program as an administrator** checkbox (as shown in the red frames in the figure below).

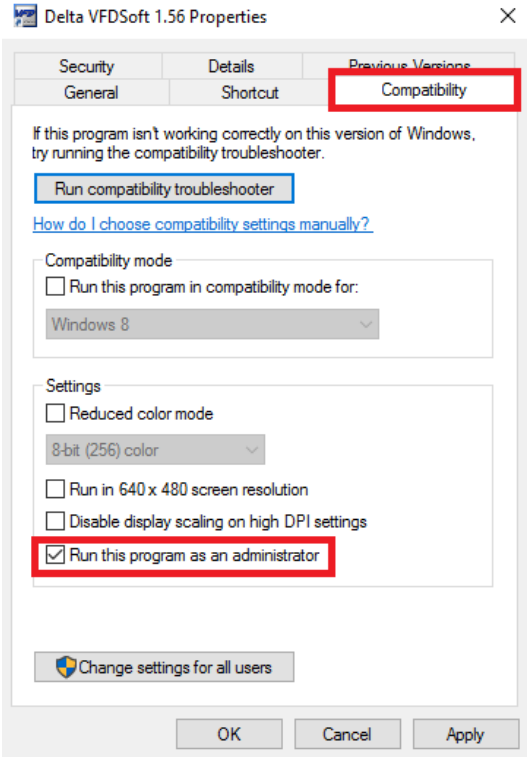

3. Connecting the KPC-CCO1 to a computer

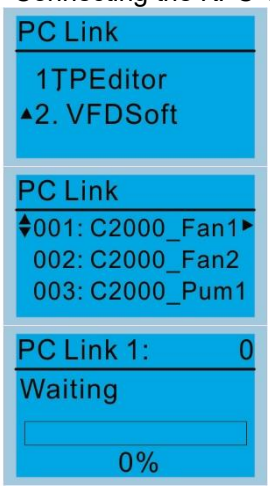

Select 2: VFDSoft, and then press ENTER.

Press the Up / Down keys to select a parameter group to upload to the VFDSoft.

Press ENTER to go to Waiting to connect to PC screen.

Open VFDSoft and click **Parameter** on the toolbar.

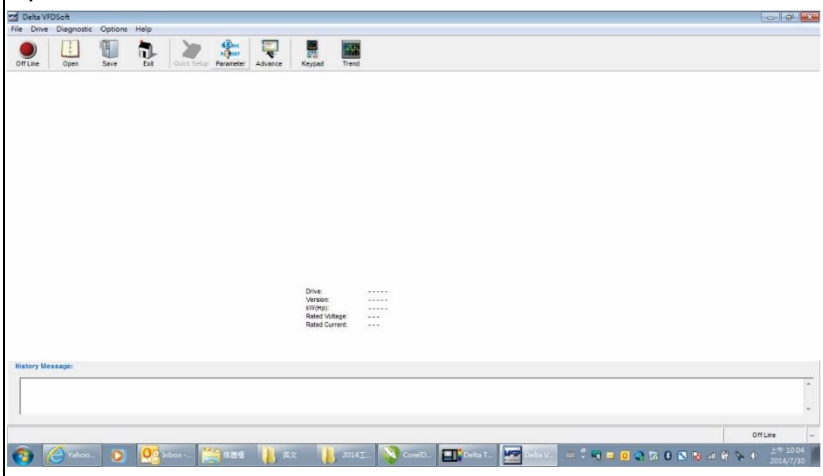

In the Parameter Management, from the **Table** menu, choose **Read from KPC-CC01**.

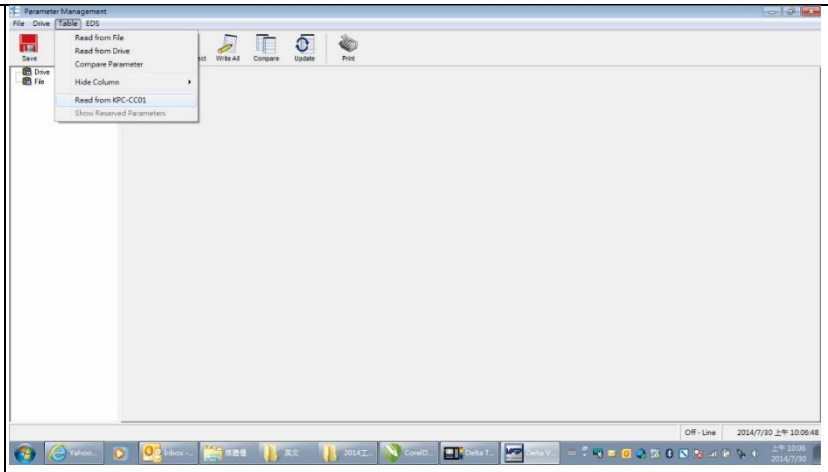

Choose the correct communication port and click **OK**.

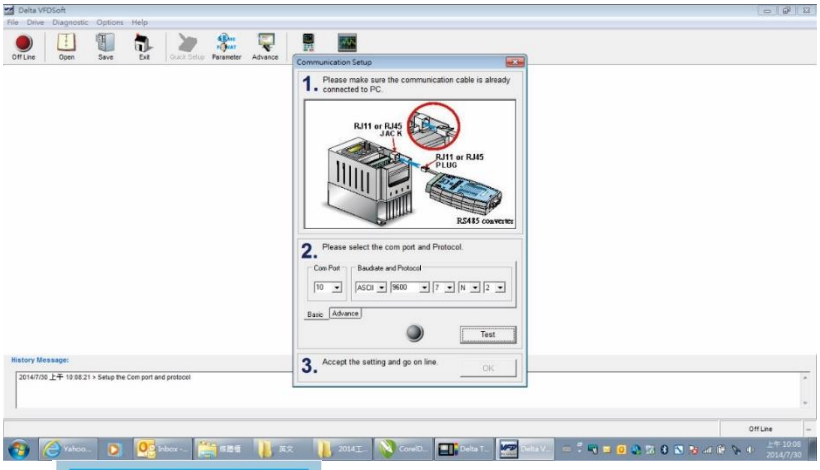

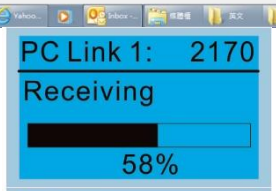

Start to upload parameters to VFDSoft.

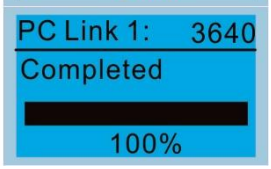

Uploading parameter is completed.

Before using the user-defined start-up screen and user-defined main screen, you must preset the start-up screen and the main screen as user-defined. If you do not download the user-defined screen to the KPC-CC01, the start-up screen and the main screen are blank.

16. Start Wizard

16.1 New drive start-up setting process

When a new drive is powered on, it directly enters the Start Wizard. There are three modes in the start-up setting process: Start Wizard, Exit Wizard and Test Mode.

(1) Start Wizard:

- In Start Wizard, you can set drive's parameters such as Calendar, Maximum operation frequency and Maximum voltage…; refer to Table 1 for setting items and orders.
- The drive exits Start Wizard when you finish the complete setting process, and will not enter this process when rebooting the power.

(2) Exit Wizard:

- Exit the Start Wizard mode. The drive does not go to Start Wizard when rebooting the power.

(3) Test Mode:

- This function is hidden to avoid misuse. Refer to the following flow chart to enter Test Mode.
- When the drive is in Test mode, it temporarily disables the Start Wizard and Exit Wizard mode.
- The Test Mode is designed for distributors / suppliers / clients to manage and operate the drive before shipping it out.
- If you enter Test Mode without exiting the Start Wizard process, the drive will begin with the new drive start-up process upon next power on.

Setting Order	Description	Parameter
1	Calendar	N/A
2	Output frequency of motor 1	01-01
3	Output voltage of motor 1	01-02
4	Full-load current for induction motor 1 (A)	05-01
5	Number of poles for induction motor 1	05-04
6	Rated speed for induction motor 1 (rpm)	05-03
7	Minimum output frequency of motor 1	01-07
8	Maximum operation frequency	01-00
9	Master frequency command source (AUTO) / Source selection of the PID target	00-20
10	Operation command source (AUTO)	00-21
11	V/F curve selection	01-43
12	Acceleration time 1	01-12
13	Deceleration time 1	01-13

Table 7-61 Start Wizard setting items

Other displays

When a fault occurs, the screen display shows the fault or warning:

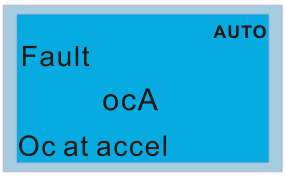

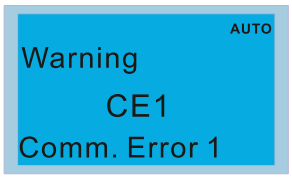

1. Press the STOP / RESET key to reset the fault code. If there is no response, contact your local distributor or return the unit to the factory. To view the fault DC bus voltage, output current and output voltage, press MENU and then choose 6: Fault Record.
2. After resetting, if the screen returns to the main page and shows no fault after your press ESC, the fault is cleared.
3. When the fault or warning message appears, the LED backlight blinks until you clear the fault or warning.

Optional accessory: RJ45 Extension Lead for Digital Keypad

Part No.	Description
CBC-K3FT	RJ45 extension lead, 3 feet (approximately 0.9 m)
CBC-K5FT	RJ45 extension lead, 5 feet (approximately 1.5 m)
CBC-K7FT	RJ45 extension lead, 7 feet (approximately 2.1 m)
CBC-K10FT	RJ45 extension lead, 10 feet (approximately 3 m)
CBC-K16FT	RJ45 extension lead, 16 feet (approximately 4.9 m)

Table 7-62

NOTE: When you need communication cables, buy non-shielded, 24 AWG, four-wire twisted pair, 100 ohms communication cables.

7-14-3 TPEditor Installation Instruction

TPEditor can edit up to 256 HMI (Human-Machine Interface) pages with a total storage capacity of 256 KB. Each page can include 50 normal objects and 10 communication objects.

1. TPEditor: Setup & Basic Functions

(1) Run TPEditor version 1.60 or above by double-clicking the program icon.

(2) On the **File** menu, click **New**. In the New Project dialog box, for **Set Device Type**, select **DELTA VFD-C Inverter**. For **TP Type**, select **VFD-C KeyPad**. For **File Name**, enter TPE0 and then click **OK**.

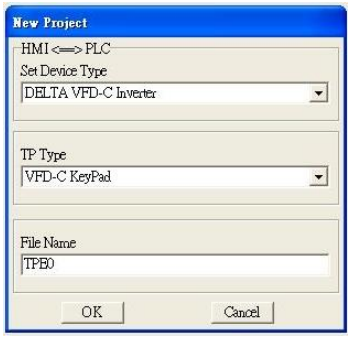

(3) The editor displays the Design window. On the **Edit** menu, click **Add a New Page**. You can also right-click on the TP page in the upper right corner of the Design window and click **Add** to add one more page(s) to edit.

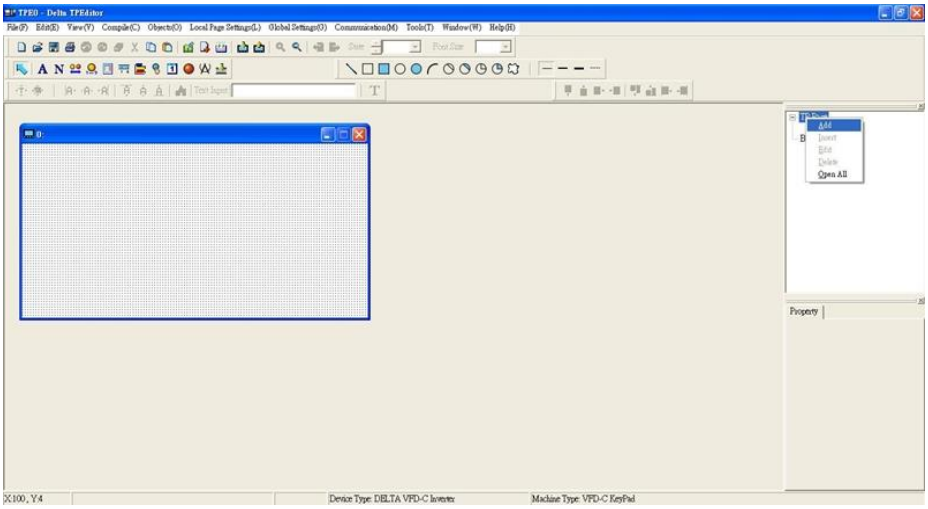

(4) Edit the start-up screen

(5) Add static text. Open a blank page (step 3), then on the toolbar click . Double-click the blank page to display the **Static Text Setting** dialog box, and then enter the static text.

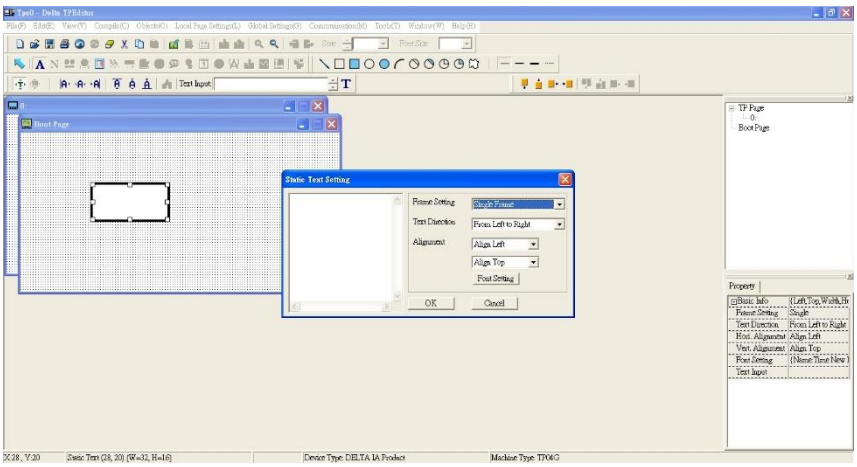

(6) Add a static bitmap. Open a blank page (step 3), then on the toolbar, click . Double-click the blank page to display the **Static Bitmap Setting** dialog box where you can choose the bitmap.

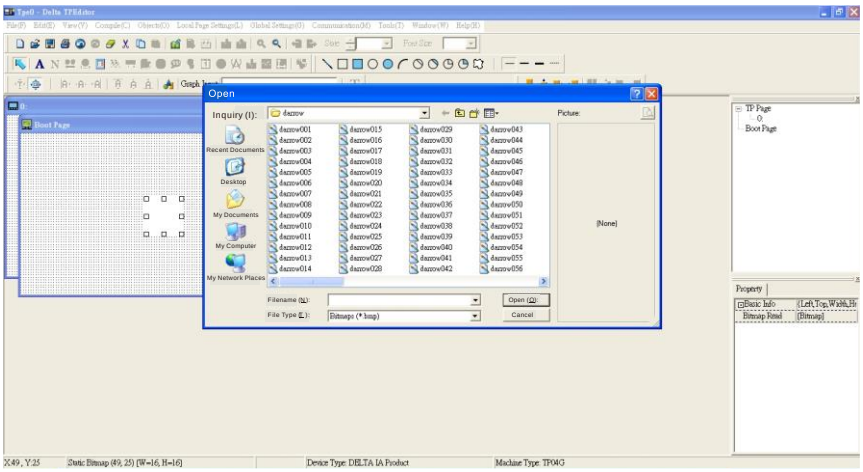

You can only use images in the BMP format. Click the image and then click Open to show the image in the page.

(7) Add a geometric bitmap. There are 11 kinds of geometric bitmaps to choose. Open a new blank page (step 3), then on the toolbar click the geometric bitmap icon that you need . In the page, drag the geometric bitmap and enlarge it to the size that you need.

(8) When you finish editing the start-up screen, on the **Communication** menu, click **Input User Defined Keypad Starting Screen.**

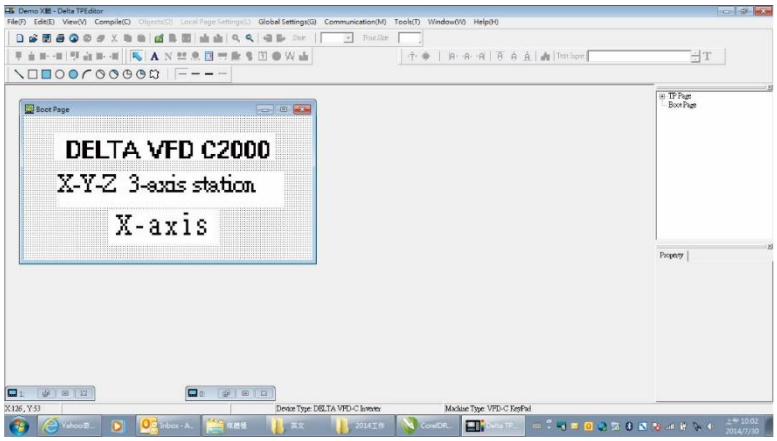

(9) Download the new setting: On the **Tool** menu, click **Communication**. Set up the communication port and speed for the IFD6530. There are three speeds available: 9600 bps, 19200 bps, and 38400 bps.

(10) On the **Communication** menu, click **Input User Defined Keypad Starting Screen**.

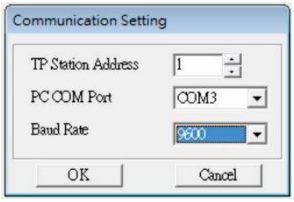

(11) The Editor displays a message asking you to confirm the new setting. Before you click **OK**, on the keypad, go to MENU, select PC LINK, press ENTER and then wait for few seconds. Then click **YES** in the confirmation dialog box to start downloading.

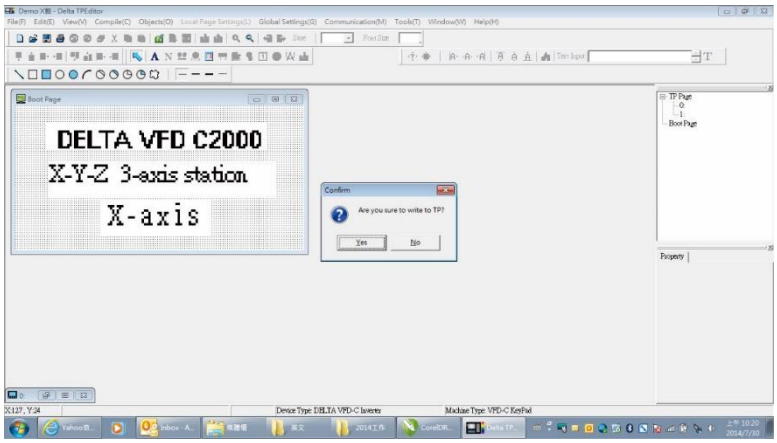

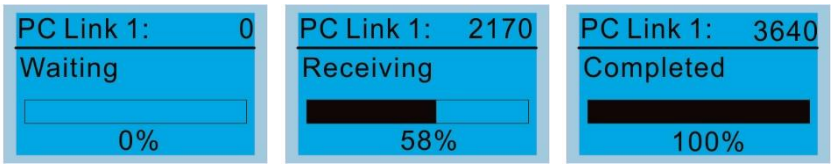

2. Edit the Main Page and Download to the Keypad

(1) In the Editor, add a page to edit. On the **Edit** menu, click **Add a New Page**. You can also right-click on the TP page in the upper right corner of the Design window and click **Add** to add one more pages to edit. This keypad currently supports up to 256 pages.

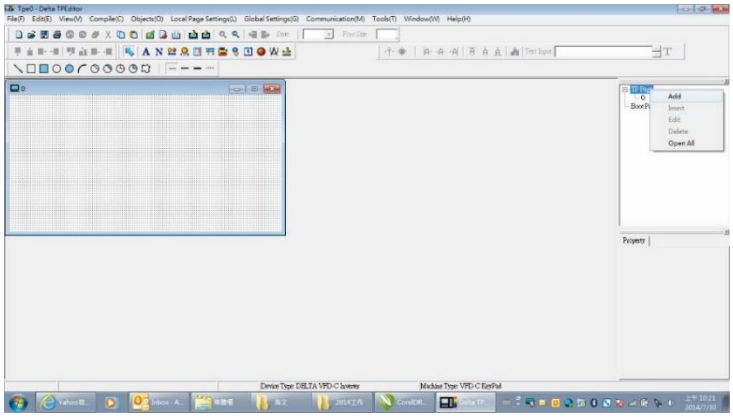

(2) In the bottom right-hand corner of the Editor, click the page number to edit, or on the **View** menu, click **HMI Page** to start editing the main page. As shown in the picture above, the following objects are available. From left to right they are: Static Text, ASCII Display, Static Bitmap, Scale, Bar Graph, Button, Clock Display, Multi-state bit map, Units, Numeric Input, the 11 geometric bitmaps, and lines of different widths. Use the same steps to add Static Text, Static Bitmap, and geometric bitmaps as for the start-up page.

(3) Add a numeric/ASCII display. On the toolbar, click the **Numeric/ASCII** button. In the page, double-click the object to specify the **Refer Device**, **Frame Setting**, **Font Setting** and **Alignment**.

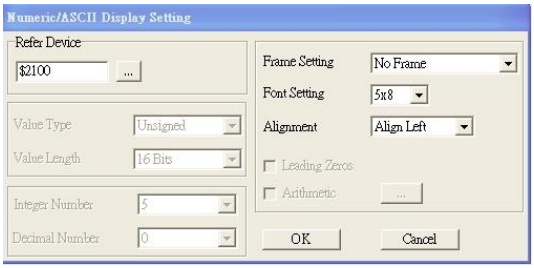

Click **(…)**. In the **Refer Device** dialog box, choose the VFD communication port that you need. If you want to read the output frequency (H), set the **Absolute Addr.** to 2202. For other values, refer to the ACMD Modbus Comm Address List (see Pr.09-04 in Chapter 12 Group 09 Communication Parameters).

(4) Scale Setting. On the toolbar, click to add a scale. You can also edit the Scale Setting in the Property Window on the right-hand side of your computer screen.

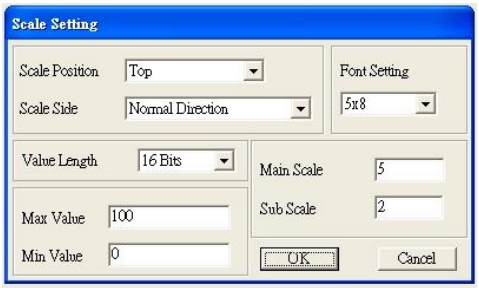

A. **Scale Position**: specifies where to place the scale.

B. **Scale Side**: specifies whether the scale is numbered from smaller numbers to larger numbers or from larger to smaller.

C. **Font Setting**: specifies the font.

D. **Value Length**: specifies 16 bits or 32 bits.

E. **Main Scale & Sub-Scale**: divides the whole scale into equal parts; enter the numbers for the main scale and sub-scale.

F. **Max Value & Min Value**: specifies the numbers on the two ends of the scale. They can be negative numbers, but the maximum and minimum values are limited by the **Value Length** setting. For example, when **Value Length** is **hexadecimal** (**16 bits**), the maximum and the minimum value cannot be entered as -40000.

G. Clicking **OK** creates a scale as in the picture below.

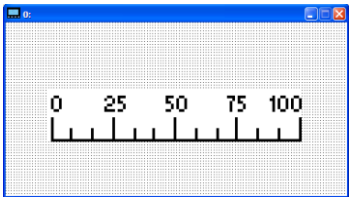

(5) Bar Graph setting. On the toolbar, click to add a bar graph.

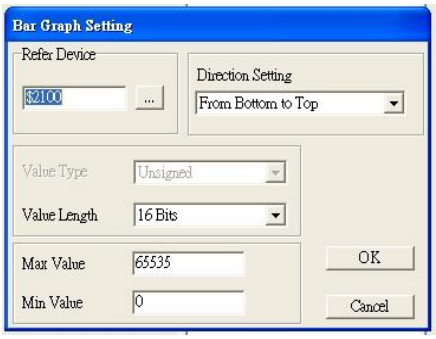

A. **Refer Device**: specifies the VFD communication port.

B. **Direction Setting**: specifies the direction: **From Bottom to Top**, **From Top to Bottom**, **From Left to Right** or **From Right to Left**.

C. **Max Value** and **Min Value**: specifies the maximum value and minimum value. A value smaller than or equal to the minimum value causes the bar graph to be blank (0). A value is bigger or equal to the maximum value causes the bar graph is full (100%). A value between the minimum and maximum values causes the bar graph to be filled proportionally.

(6) Button: on the toolbar, click . Currently this function only allows the keypad to switch pages; other functions are not yet available (including text input and insert image). In the blank page, double-click to open the Button Setting dialog box.

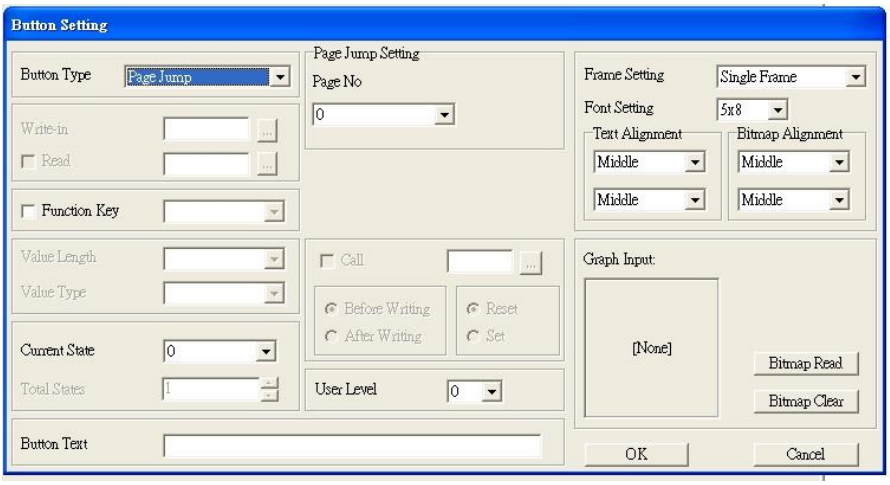

Button Type: specifies the button's functions.

Page Jump and **Constant Setting** are the only functions currently supported.

A. Page Jump Setting

- **Page Jump Setting**: in the **Button Type** list, choose **Page Jump** to show the **Page Jump Setting**.
- **Function Key**: specifies the functions for the following keys on the KPC-CC01 keypad: F1, F2, F3, F4, Up, Down, Left and Right. Note that the Up and Down keys are locked by TPEditor. You cannot program these two keys. If you want to program Up and Down keys, on the **Tool** menu, click **Function Key Setting**, and then click **Re-Define Up/Down Key**.

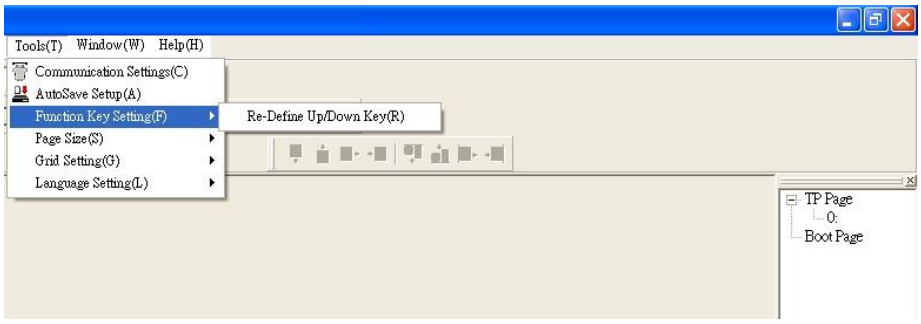

- **Button Text**: specifies the text that appears on a button. For example, when you enter Next Page for the button text, that text appears on the button.

B. Constant Setting

This function specifies the memory address' values for the VFD or PLC. When you press the **Function Key**, it writes a value to the memory address specified by the value for **Constant Setting**. You can use this function to initialize a variable.

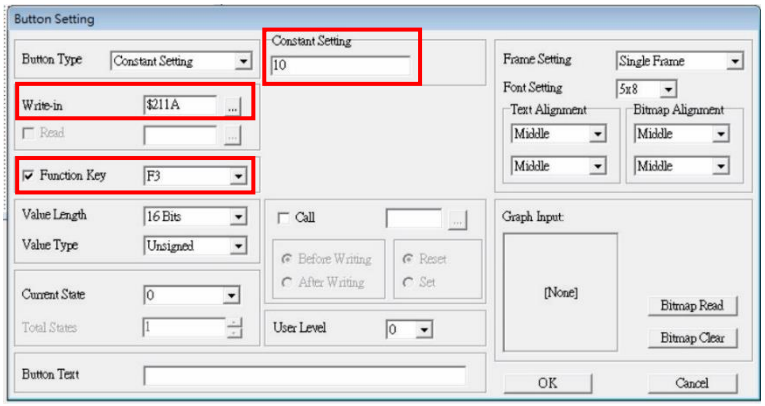

(7) **Clock Display Setting**: on the toolbar, click . You can display the time, day, or date on the keypad.

Open a new page and click once in that window to add a clock display.

Choose to display **Time**, **Day**, or **Date** on the keypad. To adjust time, go to #8 on the keypad's menu.

You can also specify the **Frame Setting**, **Font Setting**, and **Alignment**.

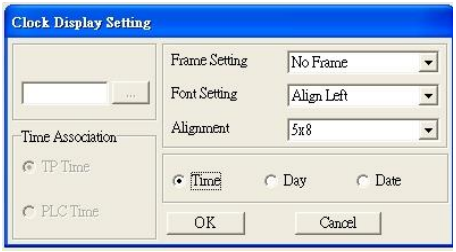

(8) Multi-state bitmap: on the toolbar, click . Open a new page and click once in that window to add a Multi-state bitmap. This object reads a bit's property value from the PLC. It defines the image or text that appears when this bit is 0 or 1. Set the initial status (**Current State**) to be 0 or 1 to define the displayed image or text.

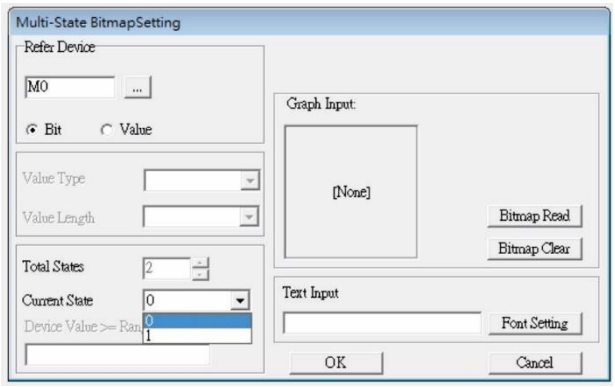

(9) Unit Measurement: on the toolbar, click .

Open a new blank page, and double-click on that window to display the **Units Setting** dialog box.

Choose the **Metrology Type** and the **Unit Name**. For **Metrology**, the choices are Length, Square Measure, Volume/Solid Measure, Weight, Speed, Time, and Temperature. The unit name changes automatically when you change metrology type.

(10) Numeric Input Setting: on the toolbar, click .

This object enables you to provide parameters or communication ports (0x22xx) and to input numbers. Open a new file and double click on that window to display the **Numeric Input Setting** dialog box.

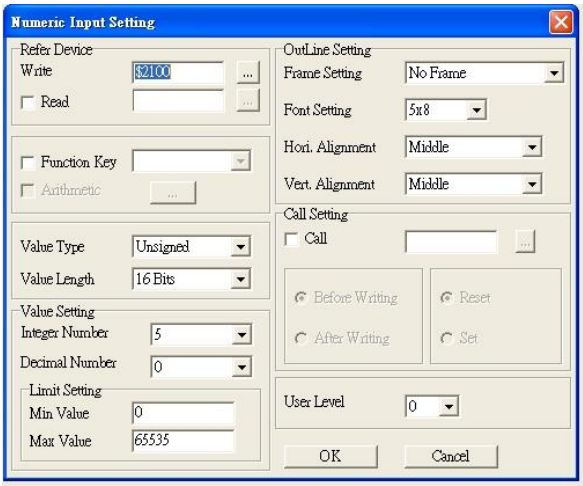

A. **Refer Device**: specifies the **Write** and the **Read** values. Enter the numbers to display and the corresponding parameter and communication port numbers. For example, enter 012C to Read and Write Parameter Pr.01-44.

B. **OutLine Setting**: specifies the **Frame Setting**, **Font Setting**, **Hori. Alignment**, and **Vert. Alignment** for the outline.

C. **Function Key**: specifies the function key to program on the keypad in the **Function Key** box. The corresponding key on the keypad starts to blink. Press ENTER to confirm the setting.

D. **Value Type** and **Value Length**: specify the range of the **Min Value** and **Max Value** for the **Limit Setting**. Note that the corresponding supporting values for MS300 must be 16 bits. 32-bit values are not supported.

E. **Value Setting**: automatically set by the keypad itself.

F. **Limit Setting**: specifies the range for the numeric input here.
For example, if you set **Function Key** to **F1**, **Min Value** to 0 and **Max Value** to 4, when you press F1 on the keypad, then you can press Up/Down on the keypad to increase or decrease the value. Press ENTER on the keypad to confirm your setting. You can also view the parameter table 01-44 to verify if you correctly entered the value.

(11) Download the TP page. Press Up/Down on the keypad to select #15 PC Link.
Then press ENTER on the keypad. The screen displays “Waiting”. In TPEditor, choose a page that you have created, and then on the **Communication** menu click **Write to TP** to start downloading the page to the keypad
When you see “Completed” on the keypad screen, the download is finished. You can then press ESC on the keypad to go back to the menu screen.

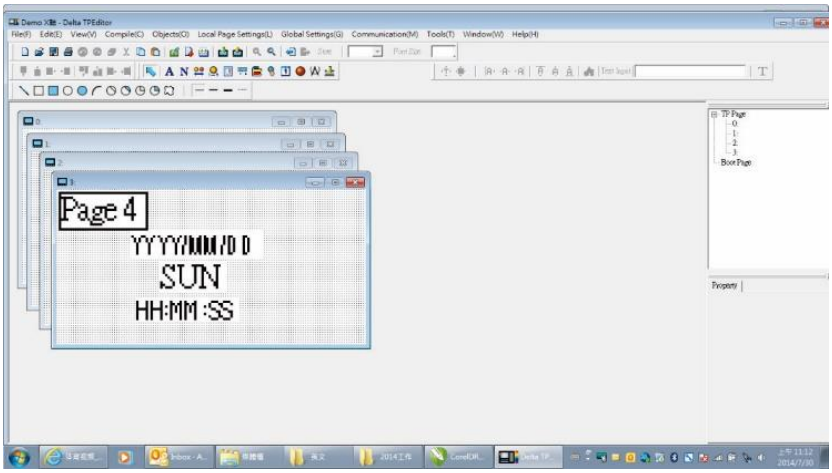
Page 4
YYYY/MM/DD
SUN
HH:MM:SS

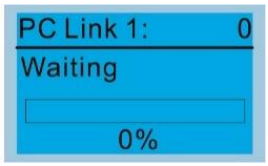
PC Link 1: 0
Waiting
0%

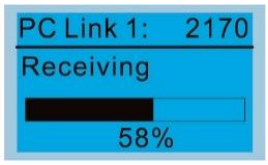
PC Link 1: 2170
Receiving
58%

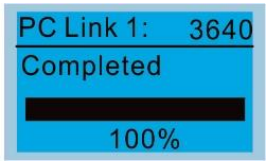
PC Link 1: 3640
Completed
100%

7-14-4 Digital Keypad KPC-CC01 Fault Codes and Descriptions

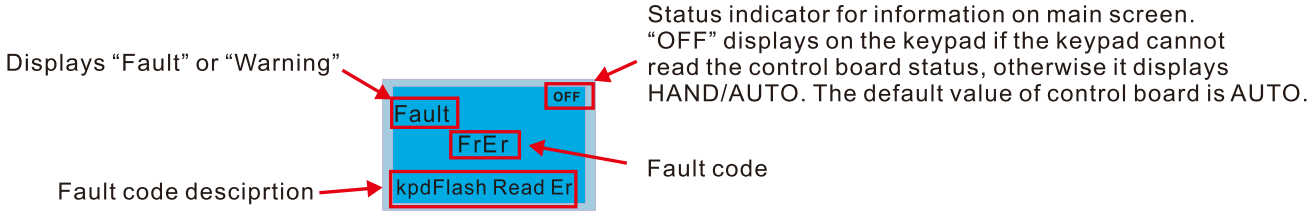

Fault Codes

LCD Display	Fault Name	Description	Corrective Actions
AUTO Fault FrEr kpd Flash Read Er	Flash memory read error (FrEr)	Keypad flash memory read error	Error in the keypad’s flash memory. 1. Press RESET to clear the errors. 2. Check for any problem on Flash IC. 3. Shut down the system, wait for ten minutes, and then restart the system. If none of the above solutions works, contact your authorized local dealer for assistance.
AUTO Fault FsEr kpd Flash Save Er	Flash memory save error (FsEr)	Keypad flash memory save error	Error in the keypad’s flash memory. 1. Press RESET to clear the errors. 2. Check for any problem on Flash IC. 3. Shut down the system, wait for ten minutes, and then restart the system. If none of the above solutions works, contact your authorized local dealer for assistance.
AUTO Fault FPEr kpd Flash Pr Er	Flash memory parameter error (FPEr)	Keypad flash memory parameter error	Error in the default parameters. It might be caused by a firmware update. 1. Press RESET to clear the errors. 2. Check for any problem on Flash IC. 3. Shut down the system, wait for ten minutes, and then restart the system. If none of the above solutions works, contact your local authorized dealer for assistance.
AUTO Fault VFDr Read VFD Info Er	Reading AC motor drive data error (VFDr)	Keypad error when reading AC motor drive data	Keypad cannot read any data sent from the VFD. 1. Verify that the keypad is properly connected to the motor drive by a communication cable such as RJ45. 2. Press RESET to clear the errors. 3. Shut down the system, wait for ten minutes, and then restart the system. If none of the above solutions works, contact your local authorized dealer for assistance.
AUTO Fault CPUEr CPU Error	CPU error (CPUEr)	Keypad CPU error	A serious error in the keypad’s CPU. 1. Check for any problem on CPU clock. 2. Check for any problem on Flash IC. 3. Check for any problem on RTC IC. 4. Verify that the communication quality of the RS-485 cable is good. 5. Shut down the system, wait for ten minutes, and then restart the system. If none of the above solutions works, contact your local authorized dealer for assistance.

Table 7-63

Warning Codes

LCD Display	Warning Name	Description	Corrective Actions
AUTO Warning CE1 Comm. Error 1	Communication error 1 (CE1)	Modbus function code error	Motor drive does not accept the communication command sent from the keypad. 1. Verify that the keypad is properly connected to the motor drive by a communication cable such as RJ45. 2. Press RESET to clear the errors. If none of the above solutions works, contact your local authorized dealer for assistance.
AUTO Warning CK1 Comm Command Er	Communication command error 1 (CK1)	Keypad communication data, illegal function code (Keypad auto-detect this error and display it)	Keypad does not accept the motor drive's communication command. 1. Remove the keypad and reconnect it. 2. Verify if the Baud rate = 19200 bps, and the Format = RTU8, N, 2 3. Verify if the keypad is properly connected to the motor drive on the communication contact by a communication cable such as RJ45. If none of the above solution works, contact your local authorized dealer.
AUTO Warning CE2 Comm. Error 2	Communication error 2 (CE2)	Modbus data address error	Motor drive does not accept the keypad's communication address. 1. Verify that the keypad is properly connected to the motor drive by a communication cable such as RJ45. 2. Press RESET to clear the errors. If none of the above solutions works, contact your local authorized dealer for assistance.
AUTO Warning CK2 Comm Address Er	Communication address error (CK2)	Keypad communication data, illegal data address (Keypad auto-detect this error and display it)	Keypad does not accept the motor drive's communication command. 1. Remove the keypad and reconnect it. 2. Verify if the Baud rate = 19200 bps, and the Format = RTU8, N, 2 3. Verify if the keypad is properly connected to the motor drive on the communication contact by a communication cable such as RJ45. If none of the above solution works, contact your local authorized dealer.
AUTO Warning CE3 Comm. Error 3	Communication error 3 (CE3)	Modbus data value error	Motor drive does not accept the communication data sent from the keypad. 1. Verify that the keypad is properly connected to the motor drive by a communication cable such as RJ45. 2. Press RESET to clear the errors. If none of the above solution works, contact your local authorized dealer for assistance.
AUTO Warning CK3 Comm Data Error	Communication data error (CK3)	Keypad communication data, illegal data value (Keypad auto-detect this error and display it)	Keypad does not accept the motor drive's communication command. 1. Remove the keypad and reconnect it. 2. Verify if the Baud rate = 19200 bps, and the Format = RTU8, N, 2 3. Verify if the keypad is properly connected to the motor drive on the communication contact by a communication cable such as RJ45. If none of the above solution works, contact your local authorized dealer.

LCD Display	Warning Name	Description	Corrective Actions
AUTO Warning CE4 Comm. Error 4	Communication error 4 (CE4)	Modbus slave drive error	Motor drive cannot process the communication command sent from the keypad. 1. Verify that the keypad is properly connected to the motor drive by a communication cable such as RJ45. 2. Press RESET to clear the errors. 3. Shut down the system, wait for ten minutes, and then restart the system. If none of the above solutions works, contact your local authorized dealer for assistance.
AUTO Warning CK4 Comm Slave Error	Communication slave error (CK4)	Keypad communication data is written to read-only address (Keypad auto-detect this error and display it)	Keypad does not accept the motor drive's communication command. 1. Remove the keypad and reconnect it. 2. Verify if the Baud rate = 19200 bps, and the Format = RTU8, N, 2 3. Verify if the keypad is properly connected to the motor drive on the communication contact by a communication cable such as RJ45. If none of the above solution works, contact your local authorized dealer.
AUTO Warning CE10 Comm. Error 10	Communication error 10 (CE10)	Modbus transmission time-out	Motor drive does not respond to the communication command sent from the keypad. 1. Verify that the keypad is properly connected to the motor drive by a communication cable such as RJ45. 2. Press RESET to clear the errors. 3. Shut down the system, wait for ten minutes, and then restart the system. If none of the above solutions works, contact your local authorized dealer for assistance.
AUTO Warning CK10 KpdComm Time Out	Keypad communication time out (CK10)	Keypad communication data, transmission time-out (Keypad auto-detect this error and display it).	Keypad does not accept the motor drive's communication command. 1. Remove the keypad and reconnect it. 2. Verify if the Baud rate = 19200 bps, and the Format = RTU8, N, 2 3. Verify if the keypad is properly connected to the motor drive on the communication contact by a communication cable such as RJ45. If none of the above solution works, contact your local authorized dealer.
AUTO Warning TPNO TP No Object	TP object not defined (TPNO)	Object not supported by TPEditor	If none of the above solution works, contact your local authorized dealer. Keypad's TPEditor uses an unsupported object. 1. Verify that the TPEditor is not using an unsupported object or setting. Delete unsupported objects and unsupported settings. 2. Re-edit the object in the TPEditor, and then download it to the keypad. 3. Verify that the motor drive supports the TP functions. If the drive does not support TP function, the main page displays Default. If none of the above solutions works, contact your local authorized dealer for assistance.

Table 7-64

NOTE: The warning code CExx only occurs when the communication problem is between the drive and the keypad. It has nothing to do with the drive and other devices. Note the warning code description to find the cause of the error if CExx appears.

File Copy Setting Fault Description:

These faults occur when KPC-CC01 cannot perform the command after clicking the ENTER key in the copy function.

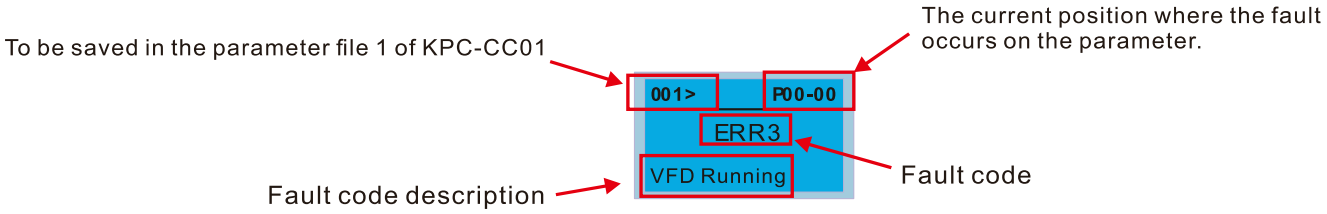

LCD Display	Fault Name	Description	Corrective Actions
001> P00-00 ERR1 Read Only	Read only (ERR1)	Parameter and file are read-only	The parameter/file is read-only and cannot be written to. 1. Verify the specification in the user manual. If this solution does not work, contact your local authorized dealer for assistance.
001> P00-00 ERR2 Write Fail	Write in error (ERR2)	Fail to write parameter and file	An error occurred while writing to a parameter/file. 1. Check for any problem on Flash IC. 2. Shut down the system, wait for ten minutes, and then restart the system. If this solution does not work, contact your local authorized dealer for assistance.
001> P00-00 ERR3 VFD Running	Drive operating (ERR3)	AC motor drive is in operating status	A setting cannot be changed while the motor drive is in operation. 1. Verify that the drive is not in operation. If this solution does not work, contact your local authorized dealer for assistance.
001> P00-00 ERR4 Pr Lock	Parameter locked (ERR4)	AC motor drive parameter is locked	A setting cannot be changed because a parameter is locked. 1. Check if the parameter is locked. If it is locked, unlock it and try to set the parameter again. If this solution does not work, contact your local authorized dealer for assistance.
001> P00-00 ERR5 Pr Changing	Parameter changing (ERR5)	AC motor drive parameter is changing	A setting cannot be changed because a parameter is being modified. 1. Check if the parameter is being modified. If it is not being modified, try to change that parameter again. If this solution does not work, contact your local authorized dealer for assistance.
001> P00-00 ERR6 Fault Code	Fault code (ERR6)	Fault code is not cleared	A setting cannot be changed because an error has occurred in the motor drive. 1. Check if an error occurred in the motor dive. If there is no error, try to change the setting again. If this solution does not work, contact your local authorized dealer for assistance.
001> P00-00 ERR7 Warning Code	Warning code (ERR7)	Warning code is not cleared	A setting cannot be changed because of a warning message given to the motor drive. 1. Check if there is a warning message given to the motor drive. If this solution does not work, contact your local authorized dealer for assistance.

LCD Display	Fault Name	Description	Corrective Actions
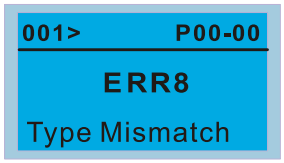	File type mismatch (ERR8)	File type mismatch	Data to be copied are not the correct type, so the setting cannot be changed. 1. Check if the products' serial numbers to be copied are in the same category. If they are in the same category, try to copy the setting again. If this solution does not work, contact your authorized dealer for assistance.
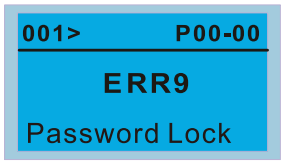	Password locked (ERR9)	File is locked with password	A setting cannot be changed because some data are locked. 1. Check if the data are unlocked or able to be unlocked. If the data are unlocked, try to change the setting again. 2. Shut down the system, wait for ten minutes, and then restart the system. If none of the above solutions works, contact your authorized dealer for assistance.
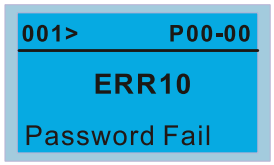	Password fail (ERR10)	File password mismatch	A setting cannot be changed because the password is incorrect. 1. Check if the password is correct. If the password is correct, try to change the setting again. 2. Shut down the system, wait for ten minutes, and then restart the system. If none of the above solutions works, contact your authorized dealer for assistance.
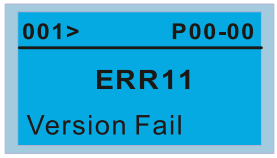	Version fail (ERR11)	File version mismatch	A setting cannot be changed because the version of the data is incorrect. 1. Check if the version of the data matches the motor drive. If it matches, try to change the setting again. If this solution does not work, contact your authorized dealer for assistance.
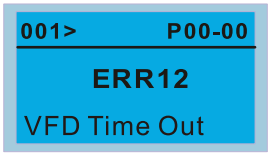	VFD Time out (ERR12)	AC motor drive copy function time-out	A setting cannot be changed because the data copying time-out expired. 1. Try copying the data again. 2. Check if copying data is authorized. If it is authorized, try to copy the data again. 3. Shut down the system, wait for ten minutes, and then restart the system. If none of the above solutions works, contact your authorized dealer for assistance.

Table 7-65

NOTE: The content in this section only applies to the KPC-CC01 keypad V1.01 and later versions.

7-14-5 Unsupported Functions when Using TPEditor with the KPC-CC01

1. Local Page Setting and Global Setting functions are not supported.

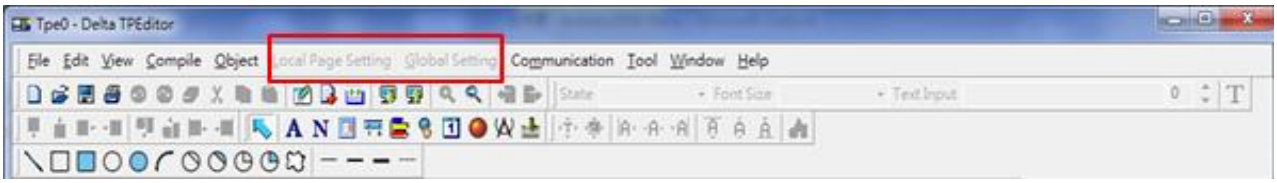

2. In the Communication menu, Read from TP function is not supported.

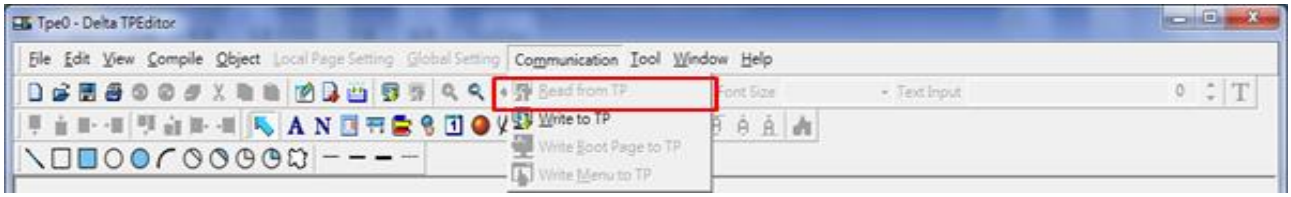

3. In the RTC Display Setting, you cannot change the Refer Device.

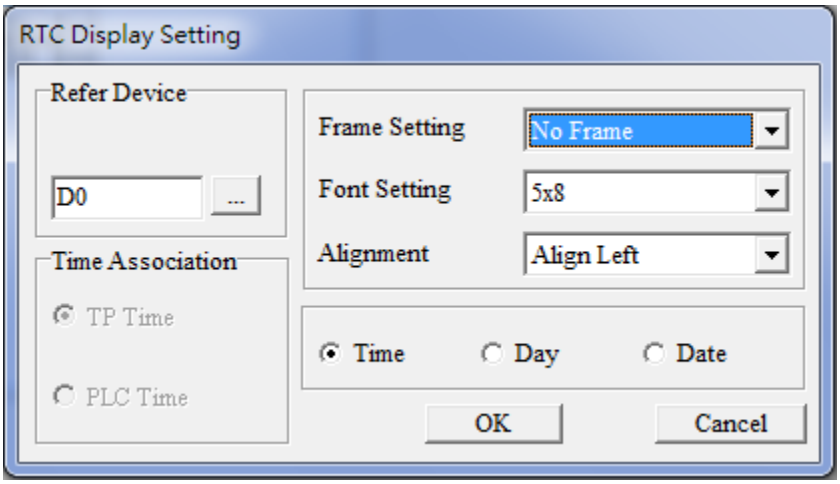

[This page intentionally left blank]

Chapter 8 Option Cards

8-1 Option Card Installation

8-2 CMM-PD02 -- Communication card, Profibus DP

8-3 CMM-DN02 -- Communication card, DeviceNet

8-4 CMM-EIP02 -- Communication Extension Card, (Single-port) EtherNet/IP, Modbus TCP

8-5 CMM-EIP03 -- (Dual-port) EtherNet/IP, Modbus TCP

8-6 CMM-COP02 -- Communication Extension Card, CANopen

8-7 CMM-EC02 -- Communication Extension Card, EtherCAT

8-8 EMM-BPS02 -- +24V Power Extension Card

8-9 CMM-PN02 -- Communication Card, PROFINET

8-10 Delta Standard Fieldbus Cables

The option cards in this chapter are optional accessories. Select the applicable option cards for your motor drive, or contact your local distributor for suggestions. The option cards can significantly improve the efficiency of the motor drive. To prevent damage to the motor drive during installation, remove the digital keypad and the cover before wiring.

8-1 Option Card Installation

Mounting Position of Option Cards

Frame A–D

Mounting position 1, 2 (Option card mounting box)

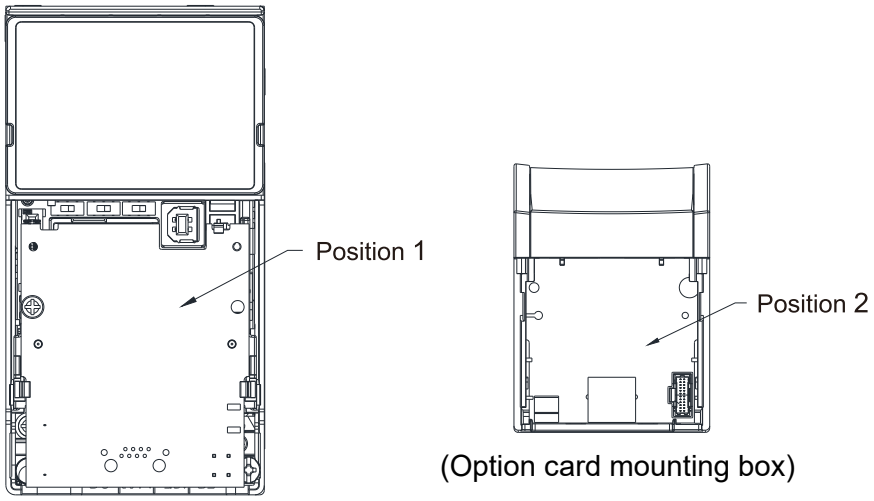

Figure 8-1

Frame E and F

Mounting position 1

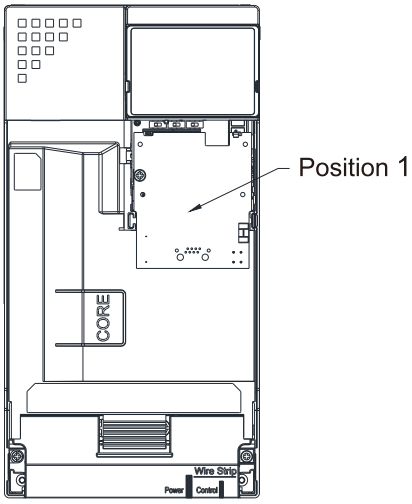

Figure 8-2

NOTE: Frame E and F do not support a second option card installation, so there is no mounting position 2.

The Wiring of Option Cards

MS300 control board connector

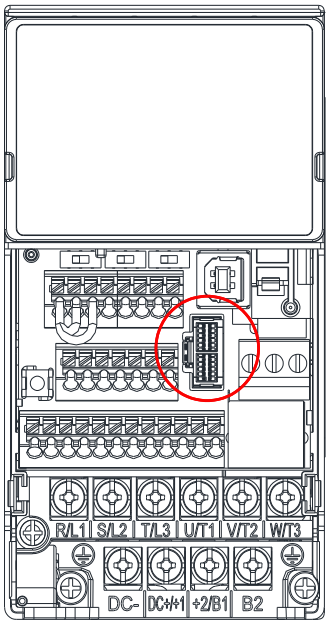

Figure 8-3

Option card connector

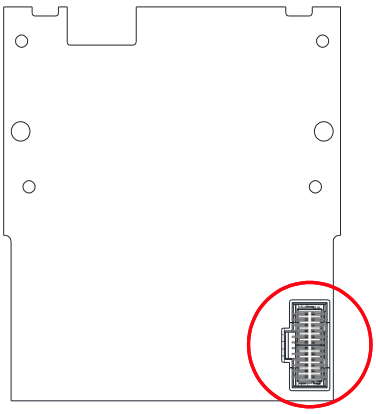

Figure 8-4

NOTE: Do NOT misuse the cables for the communication cards and the cables for the power card. You must read the descriptions on the cables before wiring.

- **Communication Card Cables**

To correctly use the communication cards, you must purchase the communication card along with the connection cables. Check your communication card models first. Then, select your applicable connection cables according to the mounting positions by different frames. Two cable length are available for your choice. See the table below to select your applicable communication card cables.

<table>
<tr><td>Communication Card</td><td colspan="2">CMM-DN02, CMM-EIP02, CMM-EIP03, CMM-PD02, CMM-COP02</td><td colspan="2">CMM-EC02*, CMM-PN02</td></tr>
<tr><td rowspan="2">Mounting Position / Cable Model</td><td>Mounting Position 1</td><td>Mounting Position 2</td><td>Mounting Position 1</td><td>Mounting Position 2</td></tr>
<tr><td>Cable Model#</td><td>Cable Model#</td><td>Cable Model#</td><td>Cable Model#</td></tr>
<tr><td>Frame A</td><td rowspan="2">CBM-CL01A</td><td>CBM-CC01A</td><td rowspan="2">CBM-CL01A</td><td>CBM-CL01A</td></tr>
<tr><td>Frame B</td><td rowspan="3">CBM-CC02A</td><td rowspan="3">CBM-CL02A</td></tr>
<tr><td>Frame C</td><td rowspan="4">CBM-CL02A</td><td rowspan="4">CBM-CL02A</td></tr>
<tr><td>Frame D</td></tr>
<tr><td>Frame E</td><td rowspan="2">N/A</td><td rowspan="2">N/A</td></tr>
<tr><td>Frame F</td></tr>
<tr><td colspan="5">NOTE: An option card mounting box is included upon purchasing the communication card CMM-EC02, you need to purchase it with CBM-CL01A or CBM-CL02A</td></tr>
</table>

Table 8-1

Cable Model	Figure
CBM-CL01A CBM-CC01A	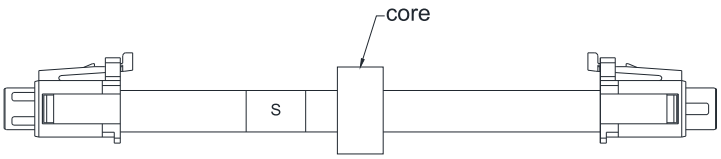 Figure 8-5
CBM-CL02A CBM-CC02A	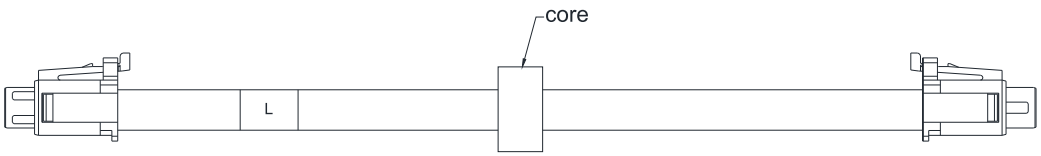 Figure 8-6

- **Power Card Cables**

An option card mounting box and cables with two different length are included when you purchase the power card EMM-BPS02 (DC 24 V backup power supply card), so you do not need to purchase it with the connection cables. “**BPS use only**” and “# S” or “# L” are marked on the EMM-BPS02 power card cable. See the table below to select your applicable power card cables according to different mounting positions.

<table>
<tr><td>Power Card</td><td colspan="2">EMM-BPS02</td></tr>
<tr><td rowspan="2">Mounting Position / Cable Model</td><td>Mounting Position 1</td><td>Mounting Position 2</td></tr>
<tr><td>Cable Model#</td><td>Cable Model#</td></tr>
<tr><td>Frame A</td><td rowspan="2"># S</td><td># S</td></tr>
<tr><td>Frame B</td><td rowspan="3"># L</td></tr>
<tr><td>Frame C</td><td rowspan="4"># L</td></tr>
<tr><td>Frame D</td></tr>
<tr><td>Frame E</td><td rowspan="2">N/A</td></tr>
<tr><td>Frame F</td></tr>
</table>

Table 8-2

<table>
<tr><th>Cable Model</th><th>Figure</th></tr>
<tr><td># S</td><td> 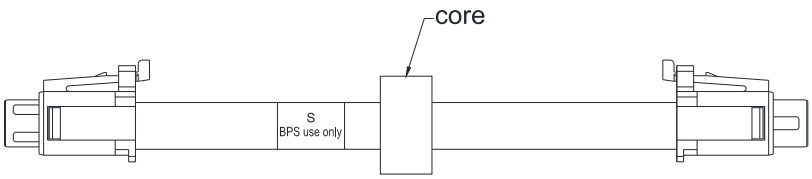

Figure 8-7</td></tr>
<tr><td># L</td><td> 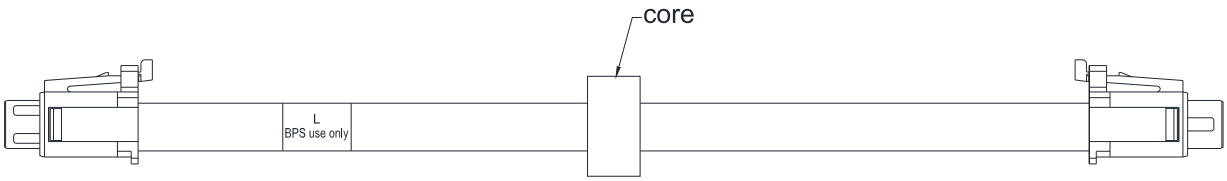

Figure 8-8</td></tr>
</table>

Option Card Mounting Position 1 (A–D)

Installation method: **Back-mount** the option card by connecting **flat cables** to the control board.

1. Turn off the power of the motor drive, and then remove the front cover, as shown in Figure 8-9.
2. Assemble the connection cable: Connect the connector at one end of the connection cable to the control board connector. Refer to Section 8-1 **The Wiring of Option Cards** for more information on connection methods.
3. Assemble the supported frame of the option card: Aim the two clips at the two slots on the motor drive, and then press downward to have the two clips engage the slots, as shown in Figure 8-10.
4. Assemble the connection cable: Connect the connector at the other end of the connection cable to the connector of the option card.
5. Assemble the option card: Have the terminal block and connector of the option card face downward, aim the two holes of the option card to the position column and press downward so that the three clips engage the option card, as shown in Figure 8-11.
6. Make sure that three clips properly engage the option card and then tighten the screws (suggested torque value: 4–6 kg-cm / (3.5–5.2 lb-in.) / (0.39–0.59 Nm), as shown in Figure 8-12.
7. Assembly is completed, as shown in Figure 8-13.

(Take communication card as an example)

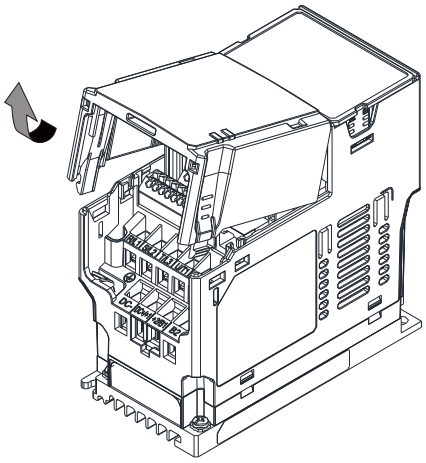

Figure 8-9

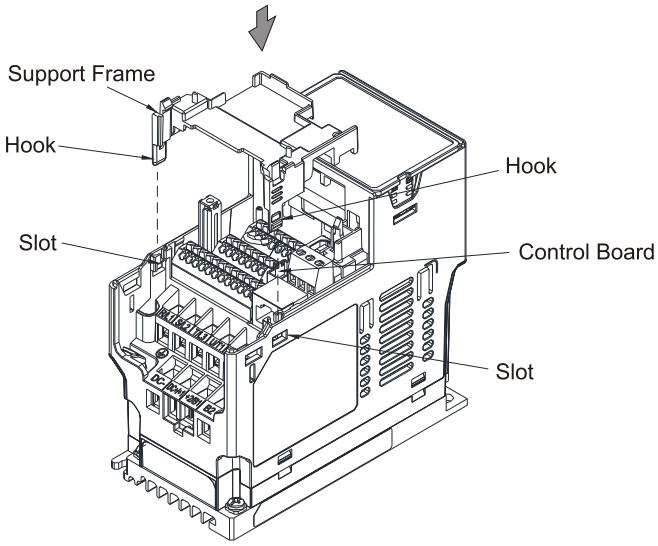

Figure 8-10

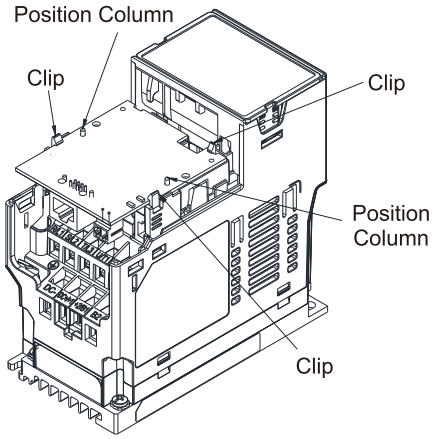

Figure 8-11

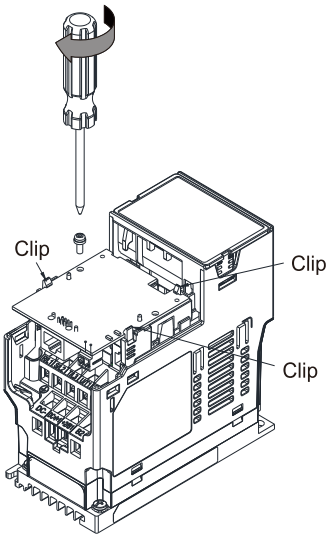

Figure 8-12

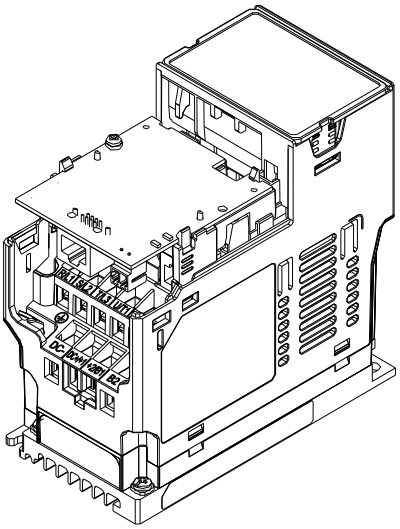

Figure 8-13

Option Card Mounting Position 1 (E, F)

Installation method: **Back-mount** the option card by connecting **flat cables** to the control board.

1. Turn off the power of the motor drive, and then remove the front cover, as shown in Figure 8-14.
2. Assemble the connection cable: Connect the connector at one end of the connection cable to the control board connector. Refer to Section 8-1 **The Wiring of Option Cards** for more information on connection methods, as shown in Figure 8-15.
3. Assemble the supported frame of the option card: Aim the two clips at the two slots on the motor drive, and then press downward to have the two clips engage the slots, as shown in Figure 8-16.
4. Assembling connection cables: Connect the connector at the other end of the connection cable to the connector of option cards, and make sure the core place in the groove, as shown in the Figure 8-1
5. Assemble the option card: Have the terminal block and connector of the option card face downward, aim the two holes of the option card to the position column and press downward so that the three clips engage the option card. Make sure that three clips properly engage the option card and then tighten the screws (suggested torque value: 4–6 kg-cm / (3.5–5.2 lb-in.) / (0.39–0.59 Nm), as shown in Figure 8-18.
6. Assembly is completed, as shown in Figure 8-19.
   (Take communication card as an example)

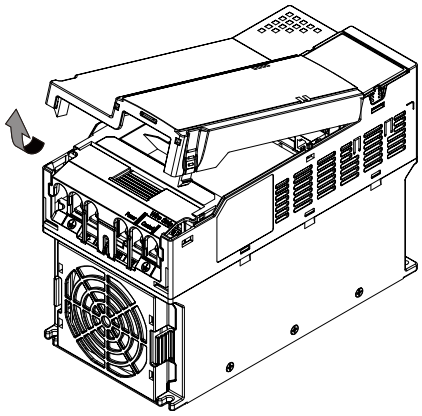

Figure 8-14

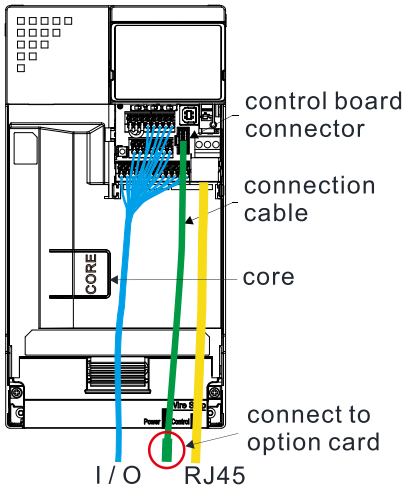

Figure 8-15

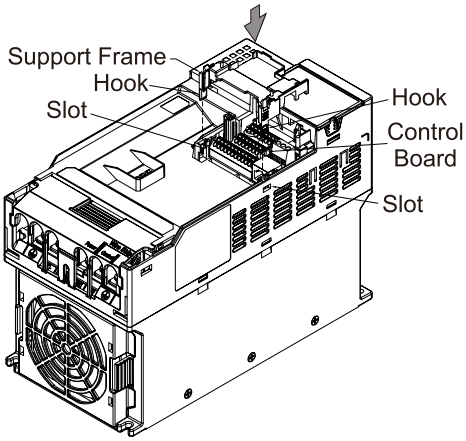

Figure 8-16

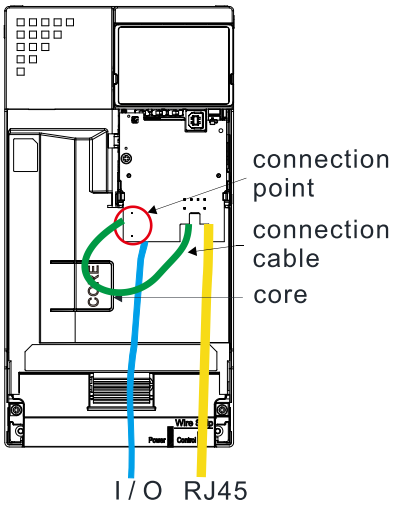

Figure 8-17

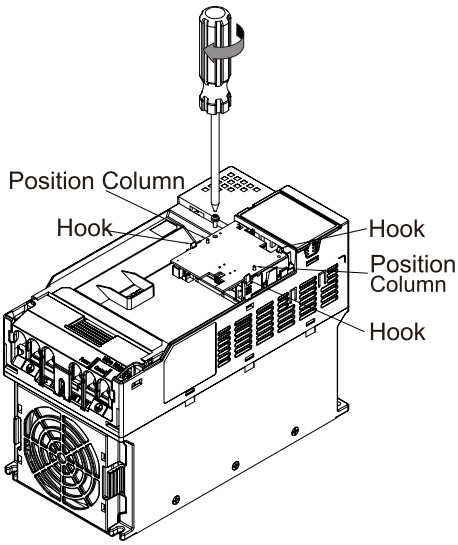

Figure 8-18

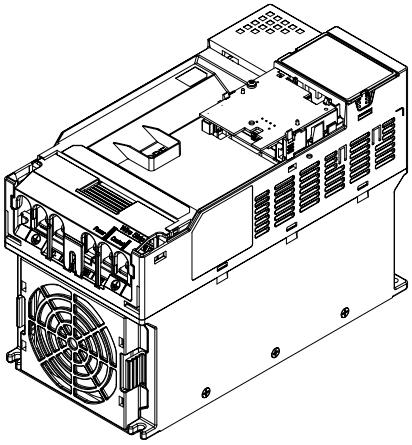

Figure 8-19

Option Card Mounting Position 2 (Frame A–D)

Installation method: **Front-mount** the option card by connecting **flat cables** to the control board.

1. Turn off the power of the motor drive and then remove the front cover, as shown in Figure 8-20.
2. Assemble the option card: Detach the upper cover of the mounting box for the option card by slipping and make the terminal block and connector of the option card face upward. Fix the front end of the option card to the slots, and press it up to assemble the option card, as shown in the Figure 8-21.
3. Make sure that two clips properly engage the option card on the backside, and then tighten the screws (suggested torque value: 4–6 kg-cm / (3.5–5.2 lb-in.) / (0.39–0.59 Nm), as shown in Figure 8-22.
4. Assemble the connection cable: Connect the connector at one end of the connection cable to the control board connector. Refer to Section 8-1 **The Wiring of Option Cards** for more information on connection methods.
5. Attach the front cover of the drive.
6. Assemble the connection cable: Connect the connector at the other end of the connection cable to the connector of the option card.
7. Attach the upper cover to the mounting box for the option card, as shown in Figure 8-23.
8. Assemble the mounting box for the option card: Aim the four clips of the mounting box for the option card at the slots on the upper cover of the motor drive, and then press downward to have the four clips engage the slots, as shown in the Figure 8-24.
9. Assembly is completed, as shown in Figure 8-25.

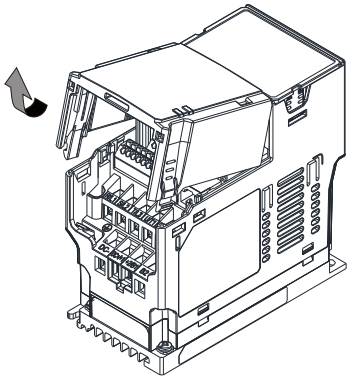

Figure 8-20

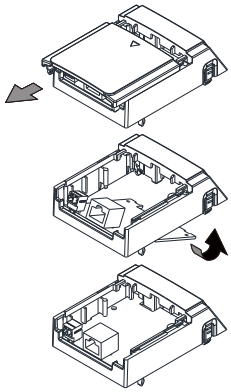

Figure 8-21

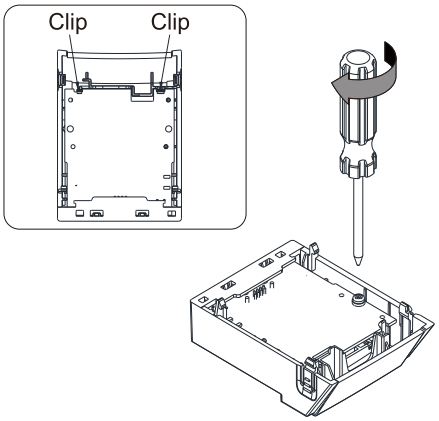

Figure 8-22

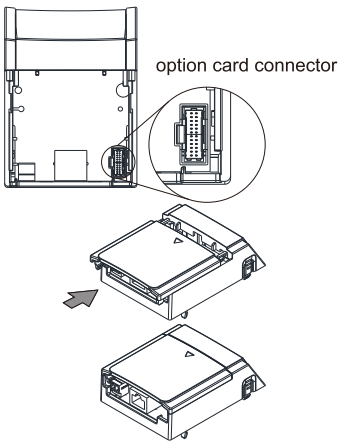

Figure 8-23

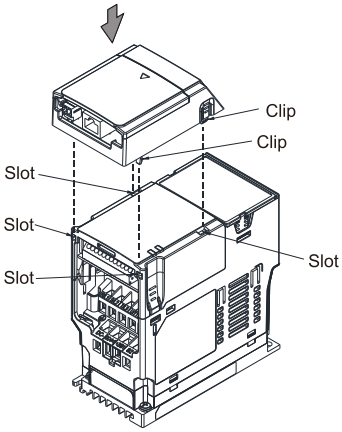

Figure 8-24

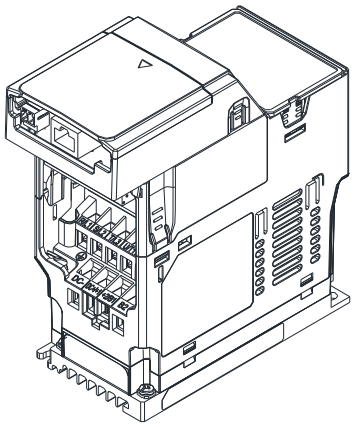

Figure 8-25

Grounded installation

- You must ground the option cards as listed below when wiring. The ground terminal is included in the option card package, as shown in Figure 8-26.
  1. CMM-PD
  2. CMM-DN
  3. CMM-EIP
  4. CMM-EIP
  5. CMM-CO 2
  6. CMM-EC
  7. EMM- S02

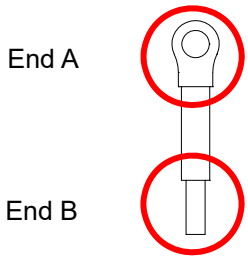

Figure 8-26

- Installation of the ground terminal:

  The B end of the grounding wire connects to the ground terminal block of the option card, as the No.6 shows in Figure 8-27 (see Chapter 8 for the ground terminal block position of other option cards). The A end of the grounding wire connects to the drive's PE, as the circles show in Figure 8-28 and Figure 8-29.

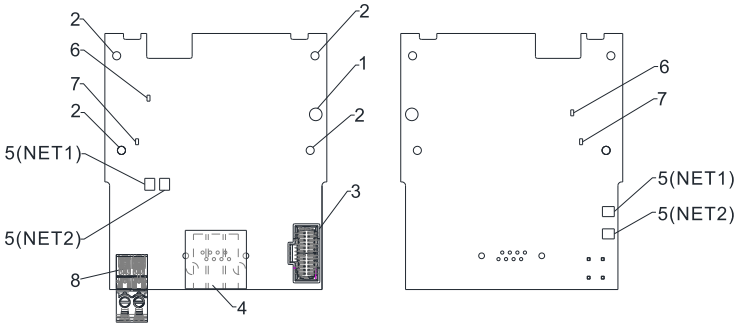

Figure 8-27

Frame A–C

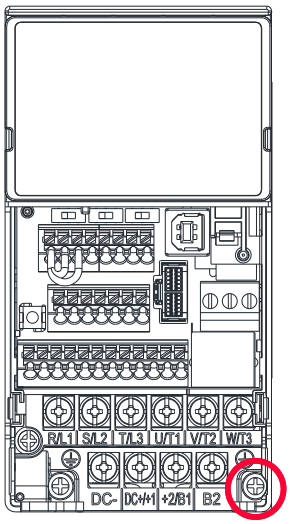

Figure 8-28

Frame D–F

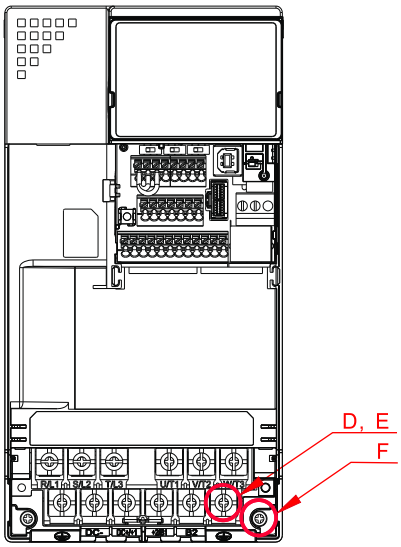

Figure 8-29

Frame	Screw Spec.	Torque (±10%)
A	M3.5	9 kg-cm/ (7.8 lb-in)/ (0.88 Nm)
B	M4	15 kg-cm/ (13.0 lb-in)/ (1.47 Nm)
C	M4	20 kg-cm/ (17.4 lb-in)/ (1.96 Nm)

Table 8-3

Frame	Screw Spec.	Torque (±10%)
D	M4	20 kg-cm/ (17.4 lb-in)/ (1.96 Nm)
E	M5	25 kg-cm/ (21.7 lb-in)/ (2.45 Nm)
F	M4	20 kg-cm/ (17.4 lb-in)/ (1.96 Nm)

Table 8-4

8-2 CMM-PD02 -- Communication card, Profibus DP

8-2-1 Product Profile

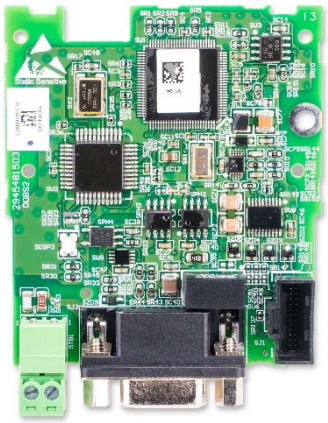

Figure 8-30

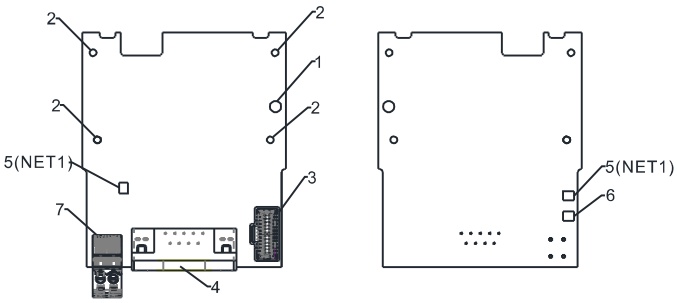

Figure 8-31

Wire gauge: 0.25–0.5 mm^2 / (24–20 AWG)
Stripping length: 7–8 mm
Screw torque: 2 kg-cm / (1.7 lb-in.) / (0.2 Nm)

1. Screw fixing hole
2. Positioning hole
3. AC motor drive connection port
4. Communication port
5. Indicator NET1
6. POWER indicator
7. Ground terminal block

8-2-2 Features

1. Supports PZD control data exchange.
2. Supports PKW access AC motor drive parameters.
3. Supports user diagnosis function.
4. Auto-detects baud rates; supports a maximum of 12 Mbps.

8-2-3 Specifications

PROFIBUS DP Connector

Interface	DB9 connector
Transmission Method	High-speed RS-485
Transmission Cable	Shielded twisted-pair cable
Electrical Isolation	500 V_{DC}

Table 8-5

Communication

Message Type	Cyclic data exchange
Module Name	CMM-PD02
GSD Document	DELA08DB.GSD
Product ID	08DB (HEX)
Serial Transmission Speed Supported (Auto-Detection)	9.6 Kbps; 19.2 Kbps; 93.75 Kbps; 187.5 Kbps; 500 Kbps; 1.5 Mbps; 3 Mbps; 6 Mbps; 12 Mbps (bits per second)

Table 8-6

Electrical Specifications

Power Supply Voltage	15 V_{DC} (supplied by the AC motor drive)
Insulation Voltage	500 V_{DC}
Power Consumption	1 W
Weight	28 g

Table 8-7

Environmental Conditions

Noise Immunity	ESD (IEC 61800-5-1, IEC 6100-4-2) EFT (IEC 61800-5-1, IEC 6100-4-4) Surge Test (IEC 61800-5-1, IEC 6100-4-5) Conducted Susceptibility Test (IEC 61800-5-1, IEC 6100-4-6)
Operation / Storage	Operation: -10–50ºC (temperature), 90% (humidity) Storage: -25–70ºC (temperature), 95% (humidity)
Shock / Vibration Resistance	International standards: IEC 61131-2, IEC 68-2-6 (TEST Fc) / IEC 61131-2 & IEC 68-2-27 (TEST Ea)

Table 8-8

8-2-4 Installation

PROFIBUS DP Connector

PIN	Signal	Definition
1	-	Not defined
2	-	Not defined
3	Rxd / Txd-P	Sending / receiving data P(B)
4	-	Not defined
5	DGND	Data reference ground
6	VP	Power voltage – positive
7	-	Not defined
8	Rxd / Txd-N	Sending / receiving data N(A)
9	-	Not defined

Table 8-9

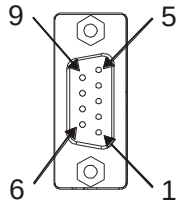

Figure 8-32

8-2-5 LED Indicator & Troubleshooting

There are two LED indicators on the CMM-PD02: POWER LED and NET LED. POWER LED displays the status of the working power. NET LED displays the connection status of the communication.

POWER LED

LED Status	Indication	Corrective Action
Green light ON	Power supply in normal status.	No action is required.
OFF	No power	Check if the connection between the CMM-PD02 and the AC motor drive is normal.

Table 8-10

NET LED

LED Status	Indication	Corrective Action
Green light ON	Normal status	No action is required.
Red light ON	The CMM-PD02 is not connected to PROFIBUS DP bus.	Connect the CMM-PD02 to the PROFIBUS DP bus.
Red light flashes	Invalid PROFIBUS communication address	Set the PROFIBUS address of the CMM-PD02 between 1–125 (decimal).
Orange light flashes	The CMM-PD02 fails to communicate with the AC motor drive.	Switch off the power and check whether the CMM-PD02 is correctly installed and normally connected to the AC motor drive.

Table 8-11

8-3 CMM-DN02 -- Communication card, DeviceNet

8-3-1 Product Profile

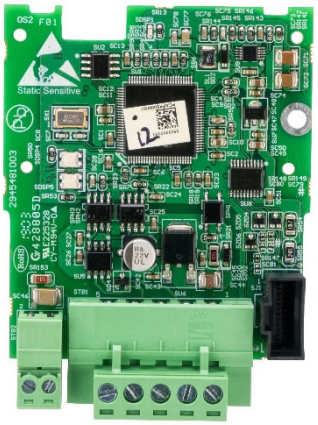

Figure 8-33

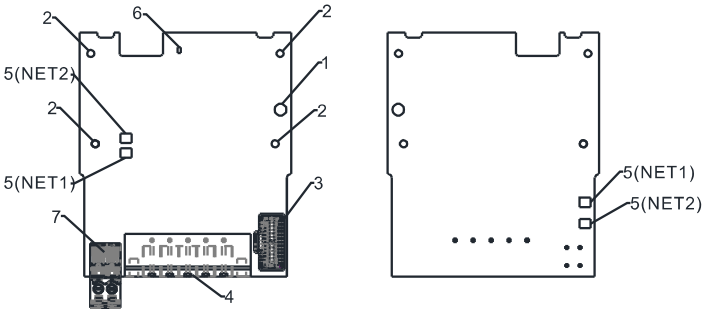

Figure 8-34

Wire gauge: 0.25–0.5 mm^2 / (24–20 AWG)
Stripping length: 7–8 mm
Screw torque: 2 kg-cm / (1.7 lb-in.) / (0.2 Nm)

1. Screw fixing hole
2. Positioning hole
3. AC motor drive connection port
4. Communication Port
5. Indicator NET1 (MS), NET2 (NS)
6. POWER indicator
7. Ground terminal block

8-3-2 Features

1. Based on the high-speed communication interface of Delta's HSSP protocol, the AC motor drive can be controlled in real-time.
2. Supports Group 2 only connection and polling I/O data exchange.
3. For I/O mapping, supports a maximum of 32 words input and 32 words output.
4. Supports EDS file configuration in DeviceNet configuration software.
5. Supports all baud rates on DeviceNet bus: 125 Kbps, 250 Kbps, 500 Kbps and extendable baud rate mode.
6. Node address and baud rate can be set in the AC motor drive.
7. Power is supplied from the AC motor drive.

8-3-3 Specifications

DeviceNet Connector

Interface	5-PIN open pluggable connector. PIN interval: 5.08 mm
Transmission Method	CAN
Transmission Cable	Shielded twisted-pair cable (with 2 power cables)
Transmission Speed	125 Kbps, 250 Kbps, 500 Kbps and extendable baud rate mode
Network Protocol	DeviceNet protocol

Table 8-12

AC Motor Drive Connection Port

Interface	24 PIN communication terminal
Transmission Method	SPI communication
Terminal Function	1. Communication module communicates with the AC motor drive through this port. 2. The AC motor drive supplies power to communication module through this port.
Communication Protocol	Delta HSSP protocol

Table 8-13

Electrical Specifications

Power Supply Voltage	15 V_{DC} (supplied by the AC motor drive)
Insulation Voltage	500 V_{DC}
Communication Cable Power Consumption	0.85 W
Power Consumption	1 W
Weight	23 g

Table 8-14

Environmental Conditions

Noise Immunity	ESD (IEC 61800-5-1, IEC 6100-4-2) EFT (IEC 61800-5-1, IEC 6100-4-4) Surge Test (IEC 61800-5-1, IEC 6100-4-5) Conducted Susceptibility Test (IEC 61800-5-1, IEC 6100-4-6)
Operation / Storage	Operation: -10–50ºC (temperature), 90% (humidity) Storage: -25–70ºC (temperature), 95% (humidity)
Shock / Vibration Resistance	International standards: IEC 61800-5-1, IEC 60068-2-6 / IEC 61800-5-1, IEC 60068-2-27

Table 8-15

DeviceNet Connector

PIN	Signal	Color	Definition
1	V+	Red	24 VDC
2	H	White	Signal+
3	S	-	Ground
4	L	Blue	Signal-
5	V-	Black	0 V

Table 8-16

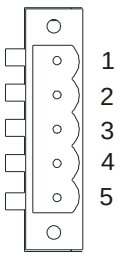

Figure 8-35

8-3-4 LED Indicator & Troubleshooting

There are two LED indicators on the CMM-DN02: NS LED and MS LED. NS LED and MS LED are dual-color LEDs, displaying the connection status and error messages of the communication module.

NS LED

LED Status	Indication	Corrective Action
OFF	No power supply or the CMM-DN02 does not pass the MAC ID test.	1. Check the power to the CMM-DN02 and see if the connection is normal. 2. Make sure there is at least one node on the bus. 3. Check if the baud rate of the CMM-DN02 is the same as that of the other nodes.
Green light flashes	The CMM-DN02 is on-line but does not connect to the master.	1. Configure the CMM-DN02 to the scan list of the master. 2. Re-download the configured data to the master.
Green light ON	The CMM-DN02 is on-line and normally connects to the master.	No action is required.

LED Status	Indication	Corrective Action
Red light flashes	The CMM-DN02 is on-line, but I/O connection is timed-out.	1. Check if the network connection is normal. 2. Check if the master operates normally.
Red light ON	1. Broken communication 2. MAC ID test failure 3. No network power supply. 4. CMM-DN02 is off-line.	1. Make sure all MAC IDs on the network are unique. 2. Check if the network installation is normal. 3. Check if the baud rate of the CMM-DN02 is the same as that of the other nodes. 4. Check if the node address of the CMM-DN02 is illegal. 5. Check if the network power supply is normal.

Table 8-17

MS LED

LED Status	Indication	Corrective Action
OFF	No power supply or device is off-line	Check the power supply of the CMM-DN02 and see if the connection is normal.
Green light flashes	Waiting for I/O data	Switch the master PLC to RUN status.
Green light ON	I/O data is normal	No action is required.
Red light flashes	Mapping error	1. Reset the CMM-DN02. 2. Re-power the AC motor drive.
Red light ON	Hardware error	1. See the fault codes displayed on the keypad and find the causes. 2. Return the unit to the factory for repair if necessary.
Orange light flashes	The CMM-DN02 is connecting with the AC motor drive.	If the flashing lasts for a long period of time, turn off the power to check if the CMM-DN02 and the AC motor drive install correctly and are normally connected to each other.

Table 8-18

8-4 CMM-EIP02 -- Communication Extension Card, (Single-port) EtherNet/IP, Modbus TCP

8-4-1 Product Profile

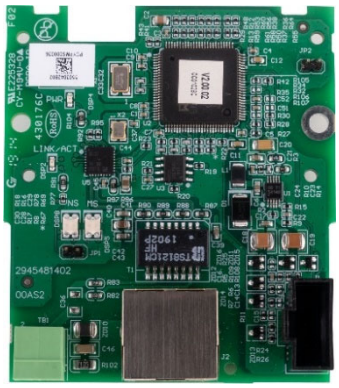

Figure 8-36

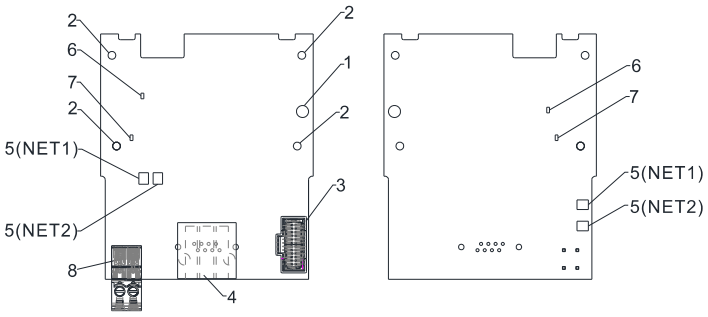

Figure 8-37

Wire gauge: 0.25–0.5 mm^2 (24–20 AWG)
Stripping length: 7–8 mm
Screw torque: 4–6 kg-cm / (3.5–5.2 lb-in.) / (0.39–0.59 Nm)

1. Screw fixing hole
2. Positioning hole
3. AC motor drive connection port
4. Communication port
5. Indicator
   NET1 (NS), NET2 (MS)
6. POWER indicator
7. Ground terminal block

8-4-2 Features

1. Supports Modbus TCP and EtherNet/IP protocol
2. 32 / 32 words parameter reading / writing correspondence
3. User-defined corresponding parameters
4. MDI / MDI-X auto-detect
5. E-mail alarm
6. IP filter simple firewall function

8-4-3 Specifications

Network Interface

Interface	RJ45 with Auto MDI / MDIX
Number Of Ports	1 Port
Transmission Method	IEEE 802.3, IEEE 802.3u
Transmission Cable	Category 5e shielding 100 M
Transmission Speed	10/100 Mbps Auto-Detect
Network Protocol	ICMP, IP, TCP, UDP, DHCP, HTTP, SMTP, Modbus TCP, EtherNet/IP, Delta Configuration

Table 8-19

Electrical Specifications

Power Supply Voltage	15 V_{DC}
Insulation Voltage	500 V_{DC}
Power Consumption	0.8 W
Weight	25 g

Table 8-20

Environmental Conditions

Noise Immunity	ESD (IEC 61800-5-1, IEC 61000-4-2) EFT (IEC 61800-5-1, IEC 61000-4-4) Surge Test (IEC 61800-5-1, IEC 61000-4-5) Conducted Susceptibility Test (IEC 61800-5-1, IEC 61000-4-6)
Operation / Storage	Operation: -10–50°C (temperature), 90% (humidity) Storage: -25–70°C (temperature), 95% (humidity)
Shock / Vibration Resistance	International standards: IEC 61800-5-1, IEC 60068-2-6 / IEC 61800-5-1, IEC 60068-2-27

Table 8-21

8-4-4 Installation

Connecting the CMM-EIP02 to the Network

1. Turn off the power of the drive.
2. Open the front cover of the drive.
3. Connect the CAT-5e network cable to the RJ45 port of the CMM-EIP02 (as shown in the right figure).

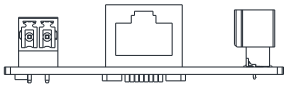

Figure 8-38

RJ45 PIN Definition

PIN	Signal	Definition
1	Tx+	Positive pole for data transmission
2	Tx-	Negative pole for data transmission
3	Rx+	Positive pole for data reception
4	--	N/C

Table 8-22

PIN	Signal	Definition
5	--	N/C
6	Rx-	Negative pole for data reception
7	--	N/C
8	--	N/C

Table 8-23

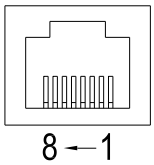

Figure 8-39

8-4-5 MS300 Communication Parameter Settings when Connecting to Ethernet

When you connect the MS300 to Ethernet, set up the communication parameters based on the table below. The Ethernet master reads and writes the frequency command words and operation command words after you set the communication parameters.

Parameters	Function	Current Setting Value	Description
00-20	Master frequency command source	8	The frequency command is controlled by the communication card.
00-21	Operation command source	5	The operation command is controlled by the communication card.
09-30	Communication decoding method	0	The decoding method for Delta AC motor drive.
09-75	IP configuration	0	0: Static IP 1: Dynamic IP (DHCP)
09-76	IP address 1	192	IP address 192.168.1.5
09-77	IP address 2	168	IP address 192.168.1.5

Parameters	Function	Current Setting Value	Description
09-78	IP address 3	1	IP address 192.168.1.5
09-79	IP address 4	5	IP address 192.168.1.5
09-80	Netmask 1	255	Netmask 255.255.255.0
09-81	Netmask 2	255	Netmask 255.255.255.0
09-82	Netmask 3	255	Netmask 255.255.255.0
09-83	Netmask 4	0	Netmask 255.255.255.0
09-84	Default gateway 1	192	Default gateway 192.168.1.1
09-85	Default gateway 2	168	Default gateway 192.168.1.1
09-86	Default gateway 3	1	Default gateway 192.168.1.1
09-87	Default gateway 4	1	Default gateway 192.168.1.1

Table 8-24

8-4-6 LED Indicator & Troubleshooting

There are four LED indicators on the CMM-EIP02: NET1 (NS), NET2 (MS), POWER LED and LINK LED. NET1 displays the network status, NET2 displays the module status. POWER LED displays the status of the working power. LINK LED displays the connection status of the communication.

LED Indicators

LED Indicators	Status		Indication	Corrective Action
NET1 (NS)	The red and green lights flash alternately		Self-test of network status.	No action is required.
	OFF		Network not connected.	Check if the network cable is connected.
	Red	ON	Duplicate IP.	Check if the IP setting is wrong.
		Flashes	Communication time out / disconnected / IP changed.	Check if the communication setting is wrong.
	Green	ON	Network connection in normal status.	No action is required.
		Flashes	Sending / receiving network packet.	No action is required.
NET2 (MS)	The red and green lights flash alternately		Self-test of product status .	No action is required.
	OFF		No power supply.	Check the power supply.
	Red	ON	An error cannot be restored occurs.	Hardware malfunction, contact with the dealer.
		Flashes	An error can be restored occurs.	Check if any parameter setting is wrong.
	Green	ON	The parameter setting finished.	No action is required.
		Flashes	No parameter setting.	Follow manual instructions to set parameters.
POWER	Orange	ON	Power supply in normal status.	No action is required.
	OFF		No power supply.	Check the power supply.

LED Indicators	Status		Indication	Corrective Action
LINK	Orange	On	Network connection in normal status.	No action is required.
		Flashes	Sending / receiving network packet.	No action is required.
	OFF		Network not connected.	Check if the network cable is connected.

Table 8-25

Troubleshooting

Abnormality	Cause	Corrective Action
Cannot find communication card	The CMM-EIP02 is not connected to the network.	Ensure that the CMM-EIP02 is correctly connected to the network.
	The PC and the CMM-EIP02 are in different networks and blocked by network firewall.	Search by IP or set up relevant settings using the AC motor drive keypad.
Cannot open CMM-EIP02 setup page	The CMM-EIP02 is not connected to the network.	Ensure that the CMM-EIP02 is correctly connected to the network.
	Incorrect communication setting in DCISoft	Ensure that the communication setting in DCISoft is set to Ethernet.
	The PC and the CMM-EIP02 are in different networks and blocked by network firewall.	Set up with the AC motor drive keypad.
The CMM-EIP02 setup page opens successfully but webpage monitoring is unavailable	Incorrect network setting in the CMM-EIP02	Check if the network setting for the CMM-EIP02 is correct. For the Intranet setting in your company, please consult your IT staff. For the Internet setting at home, please refer to the network setting instructions provided by your ISP.
Cannot send e-mails	Incorrect network setting in the CMM-EIP02	Check if the network setting for the CMM-EIP02 is correct.
	Incorrect mail server setting	Confirm the IP address for the SMTP-Server.

Table 8-26

8-5 CMM-EIP03 -- (Dual-port) EtherNet/IP, Modbus TCP

8-5-1 Product Profile

Figure 8-40

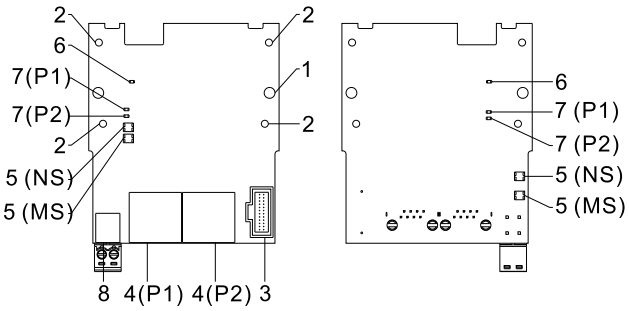

Figure 8-41

1. Screw fixing hole
2. Positioning hole
3. AC motor drive connection port
4. Communication Port: P1 (PORT1), P2 (PORT2)
5. Indicator lights: NS, MS
6. Indicator light: POWER
7. Indicator light of LINK: P1 (PORT 1), P2 (PORT 2)
8. Ground terminal block

Wire gauge: 0.25–0.5 mm^2 / (24–20 AWG)
Stripping length: 7–8 mm
Torque: 4–6 kg-cm / (3.5–5.2 lb-in.) / (0.39–0.59 Nm)

8-5-2 Features

1. Supports Modbus TCP and EtherNet/IP protocol
2. 32 / 32 words read / write parameters correspondence
3. User-defined corresponding parameters
4. MDI / MDI-X auto-detect
5. E-mai alarm
6. IP Filter simple firewall function

8-5-3 Specifications

Network Interface

Interface	RJ45 with Auto MDI / MDIX
Number of Ports	1 Port
Transmission Method	IEEE 802.3, IEEE 802.3u
Transmission Cable	Category 5e shielding 100 M
Transmission Speed	10 / 100 Mbps Auto-Detect
Network Protocol	ICMP, IP, TCP, UDP, DHCP, HTTP, SMTP, Modbus TCP, EtherNet / IP, Delta Configuration

Table 8-27

Electrical Specifications

Power Supply Voltage	15 V_{DC}
Insulation Voltage	500 V_{DC}
Power Consumption	1.3 W
Weight	30 g

Table 8-28

Environmental Conditions

Noise Immunity	ESD (IEC 61800-5-1, IEC 61000-4-2) EFT (IEC 61800-5-1, IEC 61000-4-4) Surge Test (IEC 61800-5-1, IEC 61000-4-5) Conducted Susceptibility Test (IEC 61800-5-1, IEC 61000-4-6)
Operation / Storage	Operation: -10–50°C (temperature), 90% (humidity) Storage: -25–70°C (temperature), 95% (humidity)
Shock / Vibration Resistance	International standards: IEC 61800-5-1, IEC 60068-2-6 / IEC 61800-5-1, IEC 60068-2-27

Table 8-29

8-5-4 Installation

Connecting the CMM-EIP03 to the Network

1. Switch OFF the power supply.
2. Open the front cover of the drive.
3. Connect the CAT-5e network cable to the RJ45 port on the CMM-EIP03 (as shown in the right figure).

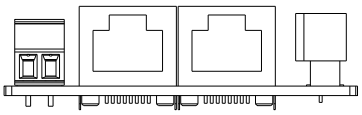

Figure 8-42

RJ45 PIN Definition

PIN	Signal	Definition
1	Tx+	Positive pole for data transmission
2	Tx-	Negative pole for data transmission
3	Rx+	Positive pole for data reception
4	--	N/C

Table 8-30

PIN	Signal	Definition
5	--	N/C
6	Rx-	Negative pole for data reception
7	--	N/C
8	--	N/C

Table 8-31

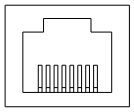

Figure 8-43

8-5-5 Communication Parameter Settings when MS300 Connects to Ethernet

When you connect the MS300 to EtherNet, set up the communication parameters based on the table below. The EtherNet master reads and writes the frequency command words and operation command words for the MS300 after you set the communication parameters.

Parameter	Function	Current Set Value	Definition of Parameter Values
00-20	Frequency command source	8	The frequency command is controlled by the communication card.
00-21	Operation command source	5	The operation command is controlled by the communication card.
09-30	Decoding method for communication	0	The decoding method for Delta AC motor drive.
09-75	IP setting	0	Static IP (0) / Dynamic distribution IP (1)
09-76	IP address 1	192	IP address 192.168.1.5
09-77	IP address 2	168	IP address 192.168.1.5
09-78	IP address 3	1	IP address 192.168.1.5

Parameter	Function	Current Set Value	Definition of Parameter Values
09-79	IP address 4	5	IP address 192.168.1.5
09-80	Netmask 1	255	Netmask 255.255.255.0
09-81	Netmask 2	255	Netmask 255.255.255.0
09-82	Netmask 3	255	Netmask 255.255.255.0
09-83	Netmask 4	0	Netmask 255.255.255.0
09-84	Default gateway 1	192	Default gateway 192.168.1.1
09-85	Default gateway 2	168	Default gateway 192.168.1.1
09-86	Default gateway 3	1	Default gateway 192.168.1.1
09-87	Default gateway 4	1	Default gateway 192.168.1.1

Table 8-32

8-5-6 LED Indicator Light & Troubleshooting

There are four LED indicator lights on CMM-EIP03: POWER LED displays the status of the working power; LINK LED displays the connection status of the communication.

LED Indicators

LED Indicators	Status		Indication	Corrective Action
NET1 (NS)	The red and green lights flash alternately		Self-test of network status	No action is required.
	OFF		Network not connected	Check if the network cable is connected.
	Red	ON	Duplicate IP	Check if the IP setting is wrong.
		Flashes	Communication time out / disconnected / IP changed	Check if the communication setting is wrong.
	Green	ON	Network connection in normal status	No action is required.
		Flashes	Sending / receiving network packet	No action is required.
NET2 (MS)	The red and green lights flash alternately		Self-test of product status	No action is required.
	OFF		No power supply	Check the power supply.
	Red	ON	An error cannot be restored occurs	Hardware malfunction, contact with the dealer.
		Flashes	An error can be restored occurs	Check if any parameter setting is wrong.
	Green	ON	The parameter setting finished	No action is required.
		Flashes	No parameter setting	Follow manual instructions to set parameters.
POWER	Orange	ON	Power supply in normal status	No action is required.
	OFF		No power supply	Check the power supply.
LINK	Orange	ON	Network connection in normal status	No action is required.
		Flashes	Sending / receiving network packet	No action is required.
	OFF		Network not connected	Check if the network cable is connected.

Table 8-33

Troubleshooting

Abnormality	Cause	Corrective Action
Cannot find communication card	The CMM-EIP03 does not connect to the network.	Make sure the CMM-EIP03 correctly connects to the network.
	The PC and the CMM-EIP03 are in different networks and blocked by network firewall.	Search by IP or set up relevant settings using the AC motor drive keypad.
Fails to open CMM-EIP03 setup page	The CMM-EIP03 does not connect to the network.	Make sure the CMM-EIP03 connects to the network.
	Incorrect communication setting in DCISoft.	Make sure the communication setting in DCISoft is set to EtherNet.
	The PC and the CMM-EIP03 are in different networks and blocked by network firewall.	Set up with the AC motor drive keypad.
Able to open the CMM-EIP03 setup page but fails to use webpage monitoring	Incorrect network setting in the CMM-EIP03.	Check if the network setting for the CMM-EIP03 is correct. For the Intranet setting in your company, please consult your IT staff. For the Internet setting at home, please refer to the network setting instruction provided by your supplier ISP.
Fails to send e-mail	Incorrect network setting in the CMM-EIP03.	Check if the network setting for the CMM-EIP03 is correct.
	Incorrect mail server setting.	Confirm the IP address for the SMTP-Server.

Table 8-34

8-6 CMM-COP02 -- Communication Extension Card, CANopen

8-6-1 Product Profile

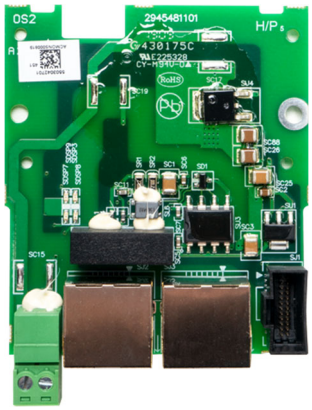

Figure 8-44

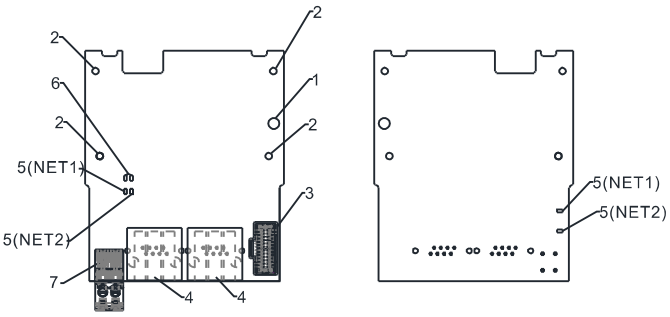

Figure 8-45

1. Screw fixing hole
2. Positioning hole
3. AC motor drive connection port
4. Communication port
5. Indicator NET1, NET2
6. Indicator light: POWER
7. Ground terminal block

Wire gauge: 0.25–0.5 mm^2 (24–20 AWG)
Stripping length: 7–8 mm
Screw torque: 2 kg-cm / (1.7 lb-in.) / (0.2 Nm)

8-6-2 RJ45 Pin Definition

Socket

Figure 8-46

PIN	Signal	Definition
1	CAN_H	CAN_H bus line (dominant high)
2	CAN_L	CAN_L bus line (dominant low)
3	CAN_GND	Ground / 0 V / V-
7	CAN_GND	Ground / 0 V / V-

Table 8-35

8-6-3 Specifications

Interface	RJ45
Number of Ports	2 Port
Transmission Method	CAN
Transmission Cable	CAN standard cable
Transmission Speed	1 Mbps; 500 Kbps; 250 Kbps; 125 Kbps; 100 Kbps; 50 Kbps
Communication Protocol	CANopen protocol
Terminating Resistance	CMM-COP02 contains terminal resistance accessories. Install the terminal resistance accessories to one of the network connectors when using CMM-COP02.

Table 8-36

8-6-4 CANopen Communication Cable

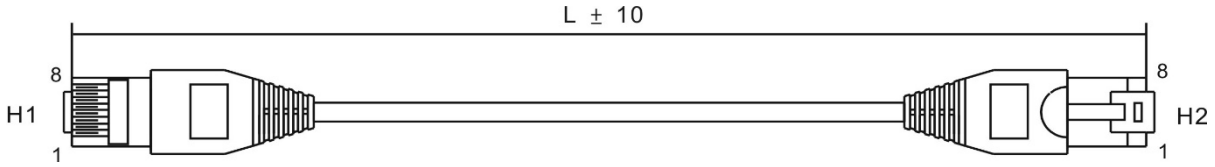

Figure 8-47

Title	Part No.	L	
		mm	inch
1	UC-CMC003-01A	300	11.8
2	UC-CMC005-01A	500	19.6
3	UC-CMC010-01A	1000	39
4	UC-CMC015-01A	1500	59
5	UC-CMC020-01A	2000	78.7
6	UC-CMC030-01A	3000	118.1
7	UC-CMC050-01A	5000	196.8
8	UC-CMC100-01A	10000	393.7
9	UC-CMC200-01A	20000	787.4

Table 8-37

8-6-5 CANopen Dimension

Model: TAP-CN03

Unit: mm (inch)

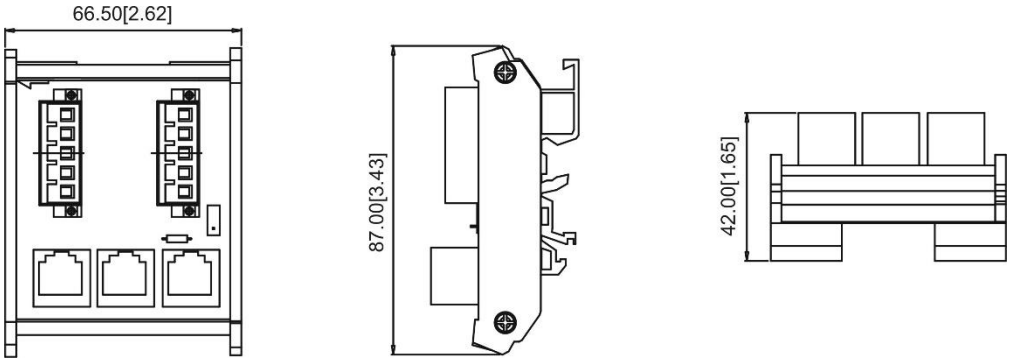

Figure 8-48

NOTE: For details on how to operate the CANopen communication card, refer to the CANopen operation manual or download the related manuals from Delta's website at http://www.delta.com.tw/industrialautomation/.

8-7 CMM-EC02 – Communication Extension Card, EtherCAT

8-7-1 Product Profile

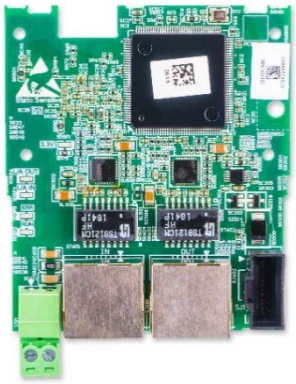

Figure 8-49

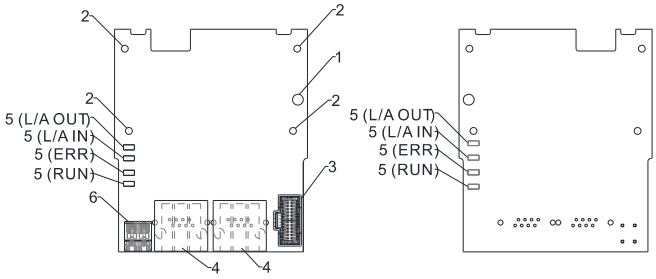

Figure 8-50

1. Screw fixing hole
2. Positioning hole
3. AC motor drive connection port
4. Communication port
5. Indicator
6. Ground terminal block

Wire gauge: 0.25–0.5 mm^2 (24–20 AWG)
Stripping length: 7–8 mm
Screw torque: 2 kg-cm / (1.7 lb-in.) / (0.2 Nm)

8-7-2 Features

1. Supports speed mode
2. Supports standard CANopen CiA 402 decoding (CoE)
3. Supports reading and writing parameters
4. Supports stop during disconnection

8-7-3 Specifications

Network Interface

Interface	RJ45
Number of Ports	2 ports
Transmission Method	IEEE 802.3, IEEE 802.3u
Transmission Cable	Category 5e shielding 100M
Transmission Speed	100 Mbps

Table 8-38

Electrical Specifications

Power Supply Voltage	15 V_{DC}
Power Consumption	0.8 W
Insulation Voltage	500 V_{DC}
Weight	27 g

Table 8-39

Environmental Conditions

Noise Immunity	ESD (IEC 61800-5-1, IEC 6100-4-2) EFT (IEC 61800-5-1, IEC 6100-4-4) Surge Test (IEC 61800-5-1, IEC 6100-4-5) Conducted Susceptibility Test (IEC 61800-5-1, IEC 6100-4-6)
Operation / Storage	Operation: -10–50º C (temperature), 90% (humidity) Storage: -25–70º C (temperature), 95% (humidity)
Shock / Vibration Resistance	International standards: IEC 61800-5-1, IEC 60068-2-6 / IEC 61800-5-1, IEC 60068-2-27

Table 8-40

8-7-4 RJ45 PIN Definition

RJ45	PIN	Signal	Definition
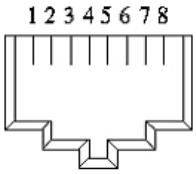 Figure 8-51	1	Tx+	Data transmit positive
	2	Tx-	Data transmit negative
	3	Rx+	Data receive positive
	4	--	N/C
	5	--	N/C
	6	Rx-	Data receive negative
	7	--	N/C
	8	--	N/C

Table 8-41

8-7-5 Communication Parameter Settings when MS300 Connects to EtherCAT

When operating MH300 with a CMM-EC02 card, you should set the control source and operation source to be controlled by the communication card. Follow the table below to set up the corresponding parameters.

Parameter	Setting Value / Display	Description
00-20	8	The frequency command is controlled by the communication card.
00-21	5	The control command is controlled by the communication card.
09-30	1	Communication decoding method: EtherCAT only supports decoding method 2 (60xx).
09-60	6	Communication card identification: When the drive connects with CMM-EC02, the display shows 6 (EtherCAT Slave).

Table 8-42

8-7-6 LED Indicator Light

LED	Status		Indication
RUN	Green	ON	Normal operation
		Flashes	Pre-operation (The light stays ON for 200 ms and then goes OFF for 200 ms alternately)
			Operate in safe mode (The light stays ON for 200 ms and then goes OFF for 1000 ms alternately)
		OFF	Initial state
ERROR	Red	Flashes	Basic configuration error (The light stays ON for 200 ms and then goes OFF for 200 ms alternately)
			Status switching error (The light stays ON for 200 ms and then goes OFF for 1000 ms alternately)
			Time out (The light stays ON for 200 ms twice, and then goes OFF for 200 ms alternately)
		OFF	No errors

LED	Status		Indication
LINK-IN	Green	ON	Network connection is in normal status
		Flashes	Network is in operation
		OFF	Doesn’t connect to network
LINK-OUT	Green	ON	Network connection is in normal status
		Flashes	Network is in operation
		OFF	Doesn’t connect to network

Table 8-43

8-7-7 Network Connection

Pay attention to the connection method for EtherCAT because its packet delivery is directional. When front-mounting the communication card, the delivery direction for CMM-EC02 is from left (IN) to right (OUT). The diagram below shows the correct wiring for front-mounting CMM-EC01.

Front-mounting the communication card:

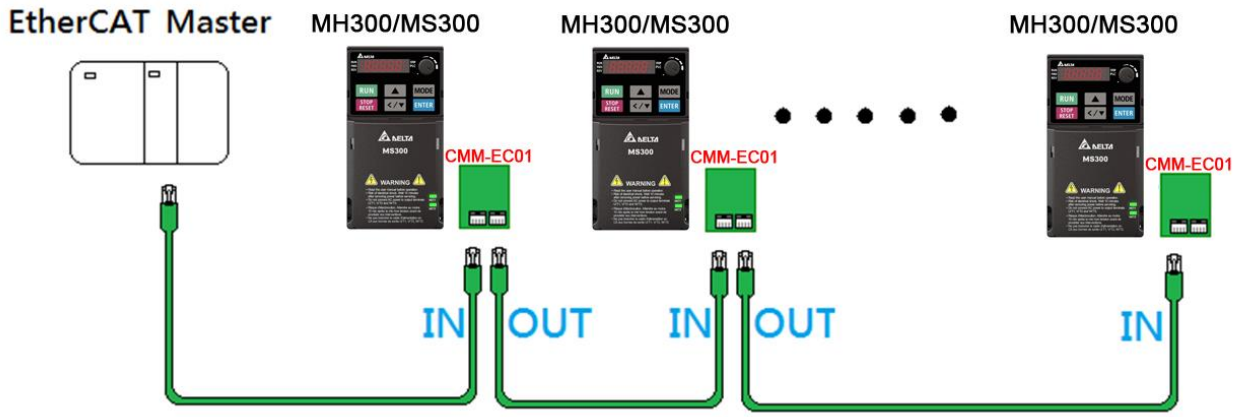

Figure 8-52

After finishing assembling the hardware, supply power to the drive. Then, Pr.09-60 on the drive should display “EtherCAT”, with a current value of 6. If not, make sure your version of the drive is correct (MS300 needs firmware version 1.02 or later) and verify if the communication card is correctly connected.

8-8 EMM-BPS02 -- +24V Power Extension Card

8-8-1 Product Profile

Figure 8-53

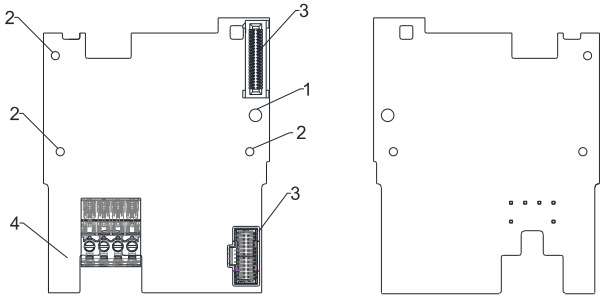

Figure 8-54

1. Screw fixing hole
2. Positioning hole
3. AC motor drive connection port (Refer to subsection 8-1-2 for installation)
4. AC motor drive connection port (Refer to subsection 8-1-4 for installation)
5. +24 V terminal block

Wire gauge: 0.25–0.5 mm^2 (24–20 AWG)
Stripping length: 7–8 mm
Screw torque: 2 kg-cm / (1.7 lb-in.) / (0.2 Nm)

	Terminal	Description
Extra 24V Power Card	24V GND	Input power: 24 V ±5% Maximum input current: 0.5 A

Table 8-44

8-8-2 Features

1. Provides external power supply.
2. Supports 24 V_{DC} input.
3. Supports parameter reading and writing and status monitoring of the drive.

8-8-3 Specifications

When the drive is only powered by the EMM-BPS02, the EMM-BPS02 ensures the communication works normally, and supports all communication cards and the following functions.

- Parameter reading and writing.
- Keypad display.
- Keys on the keyboard panel (except the RUN key).
- Analog input with +10 V terminal supply power.
- Multi-function inputs (FWD, REV, MI1–MI7) with +24 V terminal or external power supply.
- Relay output.
- Pulse sequence frequency command.

The following functions does not support:

- DFM digital frequency signal output.
- AFM multi-function analog voltage output.
- PLC functions.

8-8-4 The Cable Connection of +24V Power Card

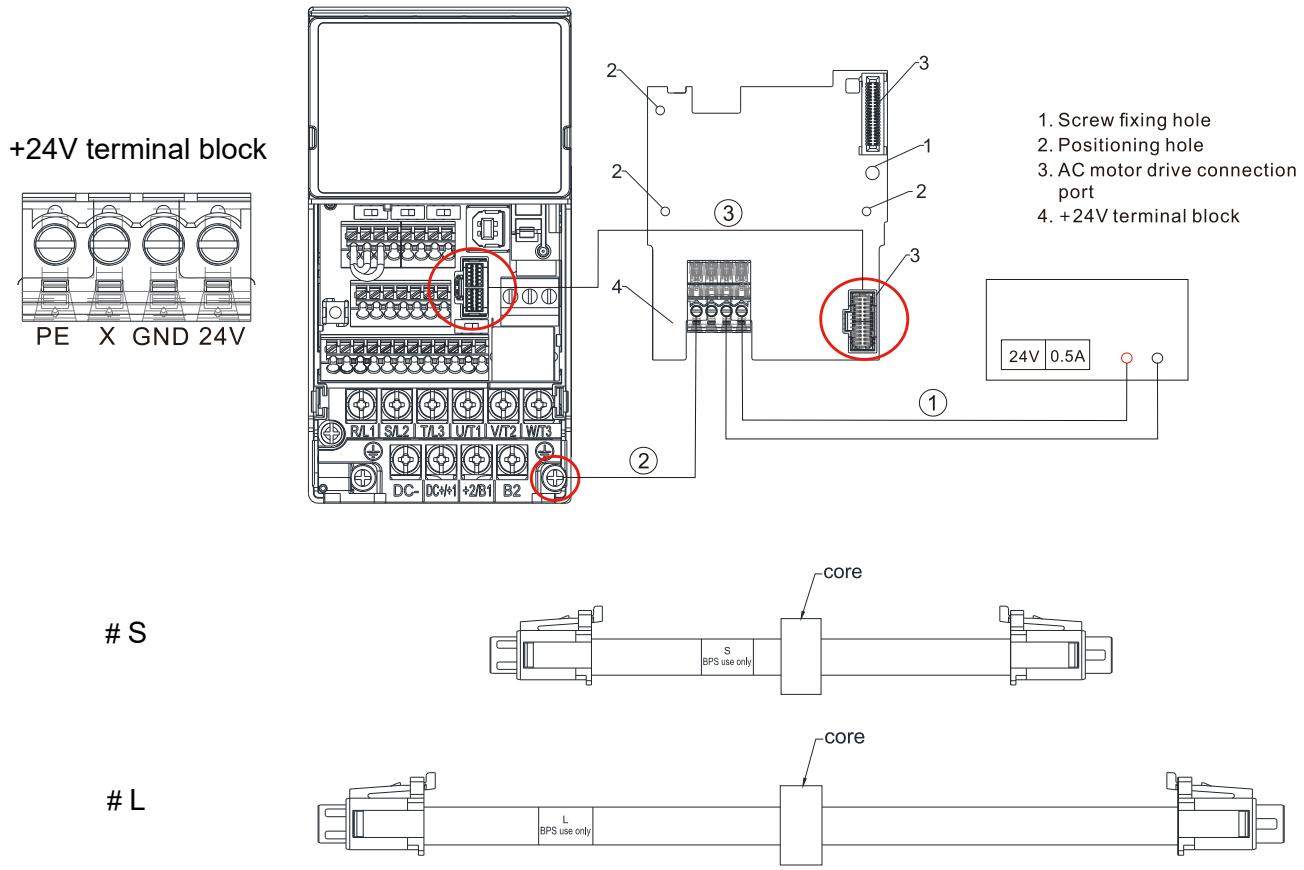

Figure 8-55

Operating procedures (refer to the mark ①②③ in the Figure 8-50)

① Choose the power supply or the host to connect the positive and negative electrodes to +24V power card.

② Connect the ground terminal of +24V power card and the ground terminal of the drive.

③ Connect one side of the cable to the connection port of the drive and another side to the +24V power card's.

8-9 CMM-PN02 -- Communication Card, PROFINET

8-9-1 Product Profile

Figure 8-56

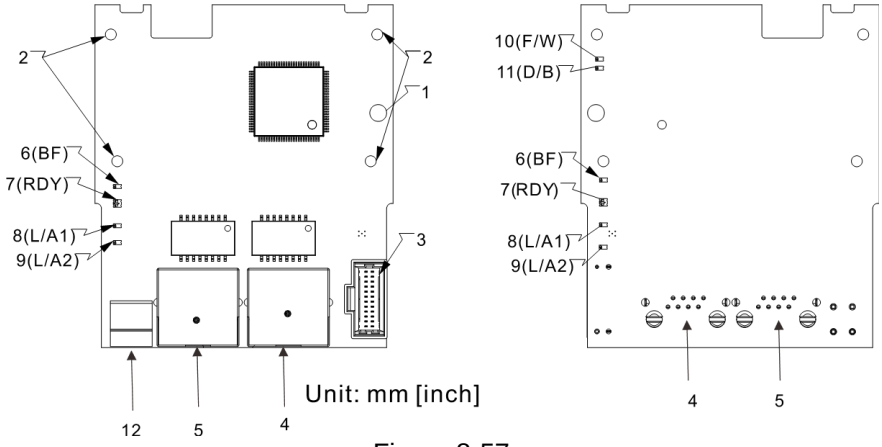

Figure 8-57

Wire: 0.2–0.5 mm^2 [24–20 AWG]
Stripping length: 7–8 mm
Torque: 2 kg-cm / [1.7 lb-in.] / [0.2 Nm]

1. Screw fastening hole
2. Positioning hole for communication card
3. Control Panel connection port
4. RJ45 connection port (Port 2)
5. RJ45 connection port (Port 1)
6. BF out indicator
7. Ready out indicator
8. Link PHY1 indicator (Port 1)
9. Link PHY2 indicator (Port 2)
10. F/W indicator
11. D/B indicator
12. PE grounding terminal

8-9-2 Features

CMM-PN02 connects MS300 drive to PROFINET to exchange data with the host controller easily. This simple network solution saves cost and time for connection and installation of factory automation. Moreover, its components are compatible with suppliers.

By installing CMM-PN02 in MS300 through the main PROFINET device, you can:

1. Control the drive through PROFINET
2. Modify the drive's parameters through PROFINET
3. Monitor the drive's status through PROFINET

8-9-3 Specifications

Network Interface

Interface	RJ45
Number of ports	2 ports
Communication Mode	IEEE 802.3
Cable	Category 5e shielding 100 M
Transmission speed	10/100 Mbps auto-negotiate
Communication protocol	PROFINET

Table 8-45

Electrical Specifications

Power supply voltage	15 V_{DC}
Power consumption	0.8 W
Insulation voltage	500 V_{DC}
Weight	27

Table 8-46

Environmental Conditions

Noise immunity	ESD (IEC 61800-5-1, IEC 6100-4-2) EFT (IEC 61800-5-1, IEC 6100-4-4) Surge Test (IEC 61800-5-1, IEC 6100-4-5) Conducted Susceptibility Test (IEC 61800-5-1, IEC 6100-4-6)
Operating temperature	-10–50°C (temperature), 90% (humidity)
Storage temperature	-25–70°C (temperature), 95% (humidity)
Vibration / Shock resistance	International standards IEC 61800-5-1, IEC 60068-2-6/IEC 61800-5-1, IEC 60068-2-27

Table 8-47

8-9-4 Definition of RJ45 Pin

RJ45 Pinout Diagram	PIN	Definition	Description
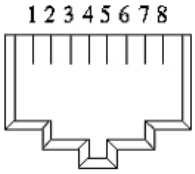 Figure 8-58	1	Tx+	Positive pole for data transmission
	2	Tx-	Negative pole for data transmission
	3	Rx+	Positive pole for receiving data
	4	--	N/C
	5	--	N/C
	6	Rx-	Negative pole for receiving data
	7	--	N/C
	8	--	N/C

Table 8-48

8-9-5 MS300 Drive Settings

When you operate MS300 through CMM-PN02, you should set the communication card as the source of MS300 controls and settings. You need to use the keypad to configure the following parameter addresses to the corresponding values:

Parameter	Settings / Displayed Value	Description of Function
00-20	8	Set communication card as the source of frequency command.
00-21	5	Set communication card as the source of control.
09-30	1	Decoding method is either 60xx or 20xx.
09-60	12	Communication card identification: When CMM-PN02 communication card is connected, the value of this parameter displays “12”.

Table 8-49

NOTE: To make PLC or the host controller to identify CMM-PN02, it is necessary to load the product description file of CMM-PN02 (GSDML). You can download it directly from Delta’s official website.

8-9-6 MAC Address Definition

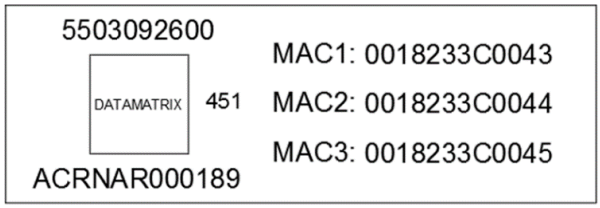

Figure 8-59

Definition	Description
MAC1	Port 1 MAC Address
MAC2	Port 2 MAC Address
MAC3	Interface MAC Address

Table 8-50

8-9-7 LED Indicators

Name	Indicator Status		Indication
BF (bus fault) indicator	Red LED	Always on	Disconnected with PROFINET Controller
		Flashing	Normal connection, but abnormal communication with PROFINET Controller.
		Off	Normal connection with PROFINET Controller
RDY indicator	Red / Green LED	Always orange	PROFINET diagnostic
		Always green	PROFINET card ready.
L/A1 (Link/ Act1) indicator	Green LED	Always on	L/A1 has network signal.
		Flashing	L/A1 is handshaking data.
		Off	L/A1 doesn't have network signal.
L/A2 (Link' Act2) indicator	Green LED	Always on	L/A2 has network signal.
		Flashing	L/A2 is handshaking data
		Off	L/A2 doesn't have network signal.

Table 8-51

8-9-8 Connecting to the Network

The wiring of CMM-PN02:

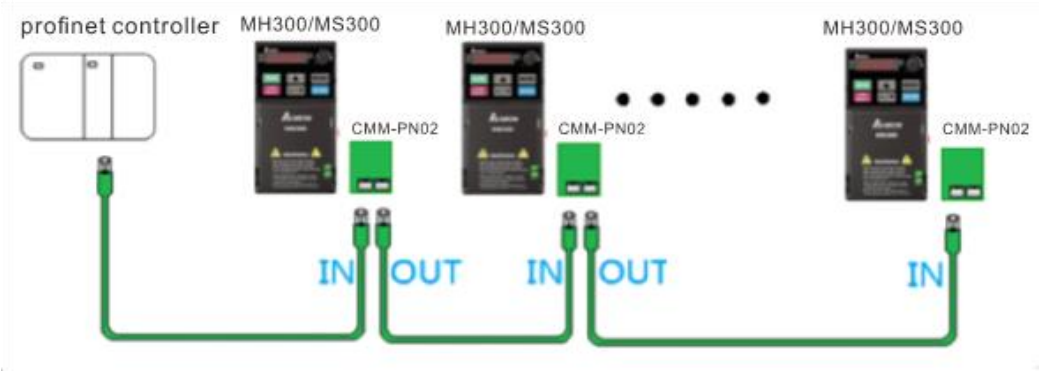

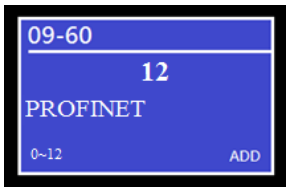

Figure 8-60

When the installation is finished, supply electricity to the drive. The Pr.09-60 of the drive should be able to display "PROFINET" with a current value of 12. If not, make sure your version of the drive is correct (MS300 needs v.2.02 or later versions) and the communication card is correctly connected.

8-10 Delta Standard Fieldbus Cables

Delta Cables	Part Number	Description	Length
CANopen Cable / Digital Keypad RJ45 Extension Lead	UC-CMC003-01A	CANopen cable, RJ45 connector	0.3 m
	UC-CMC005-01A	CANopen cable, RJ45 connector	0.5 m
	UC-CMC010-01A	CANopen cable, RJ45 connector	1 m
	UC-CMC015-01A	CANopen cable, RJ45 connector	1.5 m
	UC-CMC020-01A	CANopen cable, RJ45 connector	2 m
	UC-CMC030-01A	CANopen cable, RJ45 connector	3 m
	UC-CMC050-01A	CANopen cable, RJ45 connector	5 m
	UC-CMC100-01A	CANopen cable, RJ45 connector	10 m
	UC-CMC200-01A	CANopen cable, RJ45 connector	20 m
DeviceNet Cable	UC-DN01Z-01A	DeviceNet cable	305 m
	UC-DN01Z-02A	DeviceNet cable	305 m
Ethernet / EtherCAT Cable	UC-EMC003-02A	Ethernet / EtherCAT cable, Shielding	0.3 m
	UC-EMC005-02A	Ethernet / EtherCAT cable, Shielding	0.5 m
	UC-EMC010-02A	Ethernet / EtherCAT cable, Shielding	1 m
	UC-EMC020-02A	Ethernet / EtherCAT cable, Shielding	2 m
	UC-EMC050-02A	Ethernet / EtherCAT cable, Shielding	5 m
	UC-EMC100-02A	Ethernet / EtherCAT cable, Shielding	10 m
	UC-EMC200-02A	Ethernet / EtherCAT cable, Shielding	20 m
PROFIBUS Cable	UC-PF01Z-01A	PROFIBUS DP cable	305 m
Communication Card Connection Cable	CBM-CL01A	Communication card connection cable	145 mm
	CBM-CL02A	Communication card connection cable	250 mm
	CBM-CC01A	Communication card connection cable	145 mm
	CBM-CC02A	Communication card connection cable	250 mm

Table 8-52

Chapter 9 Specifications

9-1 115V Models

9-2 230V Models

9-3 460V Models

9-4 575V Models

9-5 General Specifications

9-6 Environment for Operation, Storage and Transportation

9-7 Derating for Ambient Temperature, Altitude and Carrier Frequency

9-1 115V Models

115V models one-phase (without built-in filter)

Frame			A				C	
Model VFD_ _ _ _ _ _ _ _ AA			1A6MS11___		2A5MS11___		4A8MS11___	
			ANS	ENS	ANS	ENS	ANS	ENS
Applicable Motor Output (kW)			0.2		0.4		0.75	
Applicable Motor Output (HP)			1/4		1/2		1	
Output*	Heavy Duty	Rated Output Capacity (kVA)	0.6		1.0		1.8	
		Rated Output Current (A)	1.6		2.5		4.8	
		Carrier Frequency (kHz)	2–15 (Default: 4)					
	Normal Duty	Rated Output Capacity (kVA)	0.7		1.0		2.1	
		Rated Output Current (A)	1.8		2.7		5.5	
		Carrier Frequency (kHz)	2–15 (Default: 4)					
Input	Rated Input Current (A)	Heavy Duty	6.0		9.4		18	
		Normal Duty	6.8		10.1		20.6	
	Rated Voltage / Frequency		One-phase 100–120 V_{AC} (-15–10%), 50/60 Hz					
	Mains Input Voltage Range (V_{AC})		85–132					
	Mains Frequency Range (Hz)		47–63					
Weight (kg)			0.65		0.74		1.24	
Cooling Method			Convective cooling				Fan cooling	
EMC Filter			Optional					
IP Rating			IP20	IP40*	IP20	IP40*	IP20	IP40*

Table 9-1

NOTE:

1. Output*: Default is heavy duty.
2. IP40*: The IP ratings of the wiring area (main circuit terminals and control terminals for frame A/B/C/D/E/F) and the vent near the capacitor (frame C/D/E/F) are both IP20.
3. The value of the carrier frequency is a factory default. Decrease the current value if you need to increase the carrier frequency. Refer to Section 9-7 Derating for Ambient Temperature and Altitude for details.
4. For shock or impact load applications, select a drive with a larger capacity model.

9-2 230V Models

230V models one-phase

Frame			A				B			
Model VFD_ _ _ _ _ _ _ _AA			1A6MS21□□□		2A8MS21□□□		1A6MS21AFS	2A8MS21AFS	4A8MS21□□□	
			ANS	ENS	ANS	ENS			ANS	ENS
Applicable Motor Output (kW)			0.2		0.4		0.2	0.4	0.75	
Applicable Motor Output (HP)			1/4		1/2		1/4	1/2	1	
Output*	Heavy Duty	Rated Output Capacity (kVA)	0.6		1.1		0.6	1.1	1.8	
		Rated Output Current (A)	1.6		2.8		1.6	2.8	4.8	
		Carrier Frequency (kHz)	2–15 (Default: 4)							
	Normal Duty	Rated Output Capacity (kVA)	0.7		1.2		0.7	1.2	1.9	
		Rated Output Current (A)	1.8		3.2		1.8	3.2	5	
		Carrier Frequency (kHz)	2–15 (Default: 4)							
Input	Rated Input Current (A)	Heavy Duty	5.1		7.3		5.1	7.3	10.8	
		Normal Duty	5.8		8.3		5.8	8.3	11.3	
	Rated Voltage / Frequency		One-phase 200–240 V_{AC} (-15–10%), 50 / 60 Hz							
	Mains Input Voltage Range (V_{AC})		170–265							
	Mains Frequency Range (Hz)		47–63							
Weight (kg)			0.65		0.76		1.32	1.32	0.95	
Cooling Method			Convective cooling					Fan cooling	Convective cooling	
EMC Filter			Optional				Built-in		Optional	
IP Rating			IP20	IP40*	IP20	IP40*	IP20			IP40*

Table 9-2

NOTE:

1. Output*: Default is heavy duty.
2. IP40*: The IP ratings of the wiring area (main circuit terminals and control terminals for frame A/B/C/D/E/F) and the vent near the capacitor (frame C/D/E/F) are both IP20.
3. The value of the carrier frequency is a factory default. Decrease the current value if you need to increase the carrier frequency. Refer to Section 9-7 Derating for Ambient Temperature and Altitude for details.
4. For shock or impact load applications, select a drive with a larger capacity model.

230V models one-phase

Frame			B	C					
Model VFD_ _ _ _ _ _ _ _AA			4A8MS21AFS	7A5MS21___			11AMS21___		
				ANS	ENS	AFS	ANS	ENS	AFS
Applicable Motor Output (kW)			0.75	1.5			2.2		
Applicable Motor Output (HP)			1	2			3		
Output*	Heavy Duty	Rated Output Capacity (kVA)	1.8	2.9			4.2		
		Rated Output Current (A)	4.8	7.5			11		
		Carrier Frequency (kHz)	2–15 (Default: 4)						
	Normal Duty	Rated Output Capacity (kVA)	1.9	3.2			4.8		
		Rated Output Current (A)	5	8.5			12.5		
		Carrier Frequency (kHz)	2–15 (Default: 4)						
Input	Rated Input Current (A)	Heavy Duty	10.8	16.5			24.2		
		Normal Duty	11.3	18.5			27.5		
	Rated Voltage / Frequency		One-phase 200–240 V_{AC} (-15–10%), 50 / 60 Hz						
	Mains Input Voltage Range (V_{AC})		170–265						
	Mains Frequency Range (Hz)		47–63						
Weight (kg)			1.32	1.24		1.8	1.24		1.8
Cooling Method			Fan cooling						
EMC Filter			Built-in	Optional		Built-in	Optional		Built-in
IP Rating			IP20		IP40*	IP20		IP40*	IP20

Table 9-3

NOTE:

1. Output*: Default is heavy duty.
2. IP40*: The IP ratings of the wiring area (main circuit terminals and control terminals for frame A/B/C/D/E/F) and the vent near the capacitor (frame C/D/E/F) are both IP20.
3. The value of the carrier frequency is a factory default. Decrease the current value if you need to increase the carrier frequency. Refer to Section 9-7 Derating for Ambient Temperature and Altitude for details.
4. For shock or impact load applications, select a drive with a larger capacity model.

230V models three-phase

Frame			A						B		C	
Model VFD_ _ _ _ _ _ _ _AA			1A6MS23___		2A8MS23___		4A8MS23___		7A5MS23___		11AMS23___	
			ANS	ENS	ANS	ENS	ANS	ENS	ANS	ENS	ANS	ENS
Applicable Motor Output (kW)			0.2		0.4		0.75		1.5		2.2	
Applicable Motor Output (HP)			1/4		1/2		1		2		3	
Output*	Heavy Duty	Rated Output Capacity (kVA)	0.6		1.1		1.8		2.9		4.2	
		Rated Output Current (A)	1.6		2.8		4.8		7.5		11	
		Carrier Frequency (kHz)	2–15 (Default: 4)									
	Normal Duty	Rated Output Capacity (kVA)	0.7		1.2		1.9		3.0		4.8	
		Rated Output Current (A)	1.8		3.2		5		8		12.5	
		Carrier Frequency (kHz)	2–15 (Default: 4)									
Input	Rated Input Current (A)	Heavy Duty	1.9		3.4		5.8		9.0		13.2	
		Normal Duty	2.2		3.8		6.0		9.6		15	
	Rated Voltage / Frequency		Three-phase 200–240 V_{AC} (-15–10%), 50 / 60 Hz									
	Mains Input Voltage Range (V_{AC})		170–265									
	Mains Frequency Range (Hz)		47–63									
Weight (kg)			0.65		0.68		0.81		1.05		1.24	
Cooling Method			Convective cooling						Fan cooling			
EMC Filter			Optional									
IP Rating			IP20	IP40*	IP20	IP40*	IP20	IP40*	IP20	IP40*	IP20	IP40*

Table 9-4

NOTE:

1. Output*: Default is heavy duty.
2. IP40*: The IP ratings of the wiring area (main circuit terminals and control terminals for frame A/B/C/D/E/F) and the vent near the capacitor (frame C/D/E/F) are both IP20.
3. The value of the carrier frequency is a factory default. Decrease the current value if you need to increase the carrier frequency. Refer to Section 9-7 Derating for Ambient Temperature and Altitude for details.
4. For shock or impact load applications, select a drive with a larger capacity model.

230V models three-phase

Frame			C		D		E				F	
Model VFD_ _ _ _ _ _ _ _AA			17AMS23□□□		25AMS23□□□		33AMS23□□□		49AMS23□□□		65AMS23□□□	
			ANS	ENS	ANS	ENS	ANS	ENS	ANS	ENS	ANS	ENS
Applicable Motor Output (kW)			3.7 / 4		5.5		7.5		11		15	
Applicable Motor Output (HP)			5		7.5		10		15		20	
Output*	Heavy Duty	Rated Output Capacity (kVA)	6.5		9.5		12.6		18.7		24.8	
		Rated Output Current (A)	17		25		33		49		65	
		Carrier Frequency (kHz)	2–15 (Default: 4)									
	Normal Duty	Rated Output Capacity (kVA)	7.4		10.3		13.7		19.4		26.3	
		Rated Output Current (A)	19.5		27		36		51		69	
		Carrier Frequency (kHz)	2–15 (Default: 4)									
Input	Rated Input Current (A)	Heavy Duty	20.4		30		39.6		58.8		78	
		Normal Duty	23.4		32.4		43.2		61.2		82.8	
	Rated Voltage / Frequency		Three-phase 200–240 V_{AC} (-15–10%), 50 / 60 Hz									
	Mains Input Voltage Range (V_{AC})		170–265									
	Mains Frequency Range (Hz)		47–63									
Weight (kg)			1.24		2.07		3.97		3.97		6.25	
Cooling Method			Fan cooling									
EMC Filter			Optional									
IP Rating			IP20	IP40*	IP20	IP40*	IP20	IP40*	IP20	IP40*	IP20	IP40*

Table 9-5

NOTE:

1. Output*: Default is heavy duty.
2. IP40*: The IP ratings of the wiring area (main circuit terminals and control terminals for frame A/B/C/D/E/F) and the vent near the capacitor (frame C/D/E/F) are both IP20.
3. The value of the carrier frequency is a factory default. Decrease the current value if you need to increase the carrier frequency. Refer to Section 9-7 Derating for Ambient Temperature and Altitude for details.
4. For shock or impact load applications, select a drive with a larger capacity model.

9-3 460V Models

460V models three-phase

Frame			A				B				
Model VFD_ _ _ _ _ _ _ _AA			1A5MS43□□□		2A7MS43□□□		1A5MS43AFS	2A7MS43AFS	4A2MS43□□ S		
			ANS	ENS	ANS	ENS			AN	EN	AF
Applicable Motor Output (kW)			0.4		0.75		0.4	0.75	1.5		
Applicable Motor Output (HP)			0.5		1		0.5	1	2		
Output*	Heavy Duty	Rated Output Capacity (kVA)	1.1		2.1		1.1	2.1	3.2		
		Rated Output Current (A)	1.5		2.7		1.5	2.7	4.2		
		Carrier Frequency (kHz)	2–15 (Default: 4)								
	Normal Duty	Rated Output Capacity (kVA)	1.4		2.3		1.4	2.3	3.5		
		Rated Output Current (A)	1.8		3		1.8	3	4.6		
		Carrier Frequency (kHz)	2–15 (Default: 4)								
Input	Rated Input Current (A)	Heavy Duty	1.7		3.0		1.7	3.0	4.6		
		Normal Duty	2.0		3.3		2.0	3.3	5.1		
	Rated Voltage / Frequency		Three-phase 380–480 V_{AC} (-15–10%), 50 / 60 Hz								
	Mains Input Voltage Range (V_{AC})		323–528								
	Mains Frequency Range (Hz)		47–63								
Weight (kg)			0.76		0.81		1.32	1.32	1.0	1.32	
Cooling Method			Convective cooling				Fan cooling				
EMC Filter			Optional				Built-in		Optional		Built-in
IP Rating			IP20	IP40*	IP20	IP40*	IP20			IP40*	IP20

Table 9-6

NOTE:

1. Output*: Default is heavy duty.
2. IP40*: The IP ratings of the wiring area (main circuit terminals and control terminals for frame A/B/C/D/E/F) and the vent near the capacitor (frame C/D/E/F) are both IP20.
3. The value of the carrier frequency is a factory default. Decrease the current value if you need to increase the carrier frequency. Refer to Section 9-7 Derating for Ambient Temperature and Altitude for details.
4. For shock or impact load applications, select a drive with a larger capacity model.

460V models three-phase

Frame			C									D					
Model VFD_ _ _ _ _ _ _ _AA			5A5MS43__S			7A3MS43__S			9A0MS43__S			13AMS43__S			17AMS43__S		
			AN	EN	AF	AN	EN	AF	AN	EN	AF	AN	EN	AF	AN	EN	AF
Applicable Motor Output (kW)			2.2			3			3.7 / 4			5.5			7.5		
Applicable Motor Output (HP)			3			4			5			7.5			10		
Output*	Heavy Duty	Rated Output Capacity (kVA)	4.2			5.6			6.9			9.9			13		
		Rated Output Current (A)	5.5			7.3			9			13			17		
		Carrier Frequency (kHz)	2~15 (Default: 4)														
	Normal Duty	Rated Output Capacity (kVA)	5.0			6.1			8.0			12			15.6		
		Rated Output Current (A)	6.5			8			10.5			15.7			20.5		
		Carrier Frequency (kHz)	2~15 (Default: 4)														
Input	Rated Input Current (A)	Heavy Duty	6.1			8.1			9.9			14.3			18.7		
		Normal Duty	7.2			8.9			11.6			17.3			22.6		
	Rated Voltage / Frequency		Three-phase 380–480 V_{AC} (-15–10%), 50 / 60 Hz														
	Mains Input Voltage Range (V_{AC})		323–528														
	Mains Frequency Range (Hz)		47–63														
Weight (kg)			1.24		1.80	1.24		1.80	1.24		1.80	2.07		2.91	2.07		2.91
Cooling Method			Fan cooling														
EMC Filter			Optional		Built-in	Optional		Built-in	Optional		Built-in	Optional		Built-in	Optional		Built-in
IP Rating			IP20	IP40*	IP20		IP40*	IP20		IP40*	IP20		IP40*	IP20		IP40*	IP20

Table 9-7

NOTE:

1. Output*: Default is heavy duty.
2. IP40*: The IP ratings of the wiring area (main circuit terminals and control terminals for frame A/B/C/D/E/F) and the vent near the capacitor (frame C/D/E/F) are both IP20.
3. The value of the carrier frequency is a factory default. Decrease the current value if you need to increase the carrier frequency. Refer to Section 9-7 Derating for Ambient Temperature and Altitude for details.
4. For shock or impact load applications, select a drive with a larger capacity model.

460V models three-phase

Frame			E						F					
Model VFD_ _ _ _ _ _ _ _AA			25AMS43__S			32AMS43__S			38AMS43__S			45AMS43__S		
			AN	EN	AF	AN	EN	AF	AN	EN	AF	AN	EN	AF
Applicable Motor Output (kW)			11			15			18.5			22		
Applicable Motor Output (HP)			15			20			25			30		
Output*	Heavy Duty	Rated Output Capacity (kVA)	19.1			24.4			29			34.3		
		Rated Output Current (A)	25			32			38			45		
		Carrier Frequency (kHz)	2–15 (Default: 4)											
	Normal Duty	Rated Output Capacity (kVA)	21.3			27.4			31.6			37.3		
		Rated Output Current (A)	28			36			41.5			49		
		Carrier Frequency (kHz)	2–15 (Default: 4)											
Input	Rated Input Current (A)	Heavy Duty	27.5			35.2			41.8			49.5		
		Normal Duty	30.8			39.6			45.7			53.9		
	Rated Voltage / Frequency		Three-phase 380–480 V_{AC} (-15–10%), 50 / 60 Hz											
	Mains Input Voltage Range (V_{AC})		323–528											
	Mains Frequency Range (Hz)		47–63											
Weight (kg)			3.97		5.15	3.97		5.15	6.25		8.50	6.25		8.50
Cooling Method			Fan cooling											
EMC Filter			Optional		Built-in	Optional		Built-in	Optional		Built-in	Optional		Built-in
IP Rating			IP20	IP40*	IP20	IP20	IP40*	IP20	IP40*		IP20	IP40*		IP20

Table 9-8

NOTE:

1. Output*: Default is heavy duty.
2. IP40*: The IP ratings of the wiring area (main circuit terminals and control terminals for frame A/B/C/D/E/F) and the vent near the capacitor (frame C/D/E/F) are both IP20.
3. The value of the carrier frequency is a factory default. Decrease the current value if you need to increase the carrier frequency. Refer to Section 9-7 Derating for Ambient Temperature and Altitude for details.
4. For shock or impact load applications, select a drive with a larger capacity model.

460V plate-mounting models three-phase

Frame			A	B	C		
Model VFD_ _ _ _ _ _ _ _AA			2A7MS43PNS	4A2MS43PNS	5A5MS43PNS	7A3MS43PNS	9A0MS43PNS
Applicable Motor Output (kW)			0.75	1.5	2.2	3	3.7 / 4
Applicable Motor Output (HP)			1	2	3	4	5
Output*	Heavy Duty	Rated Output Capacity (kVA)	2.1	3.2	4.2	5.6	6.9
		Rated Output Current (A)	2.7	4.2	5.5	7.3	9
		Carrier Frequency (kHz)	2–15 (Default: 4)				
	Normal Duty	Rated Output Capacity (kVA)	2.3	3.5	5.0	6.1	8.0
		Rated Output Current (A)	3	4.6	6.5	8	10.5
		Carrier Frequency (kHz)	2–15 (Default: 4)				
Input	Rated Input Current (A)	Heavy Duty	3.0	4.6	6.1	8.1	9.9
		Normal Duty	3.3	5.1	7.2	8.9	11.6
	Rated Voltage / Frequency		Three-phase 380–480 V_{AC} (-15–10%), 50 / 60 Hz				
	Mains Input Voltage Range (V_{AC})		323–528				
	Mains Frequency Range (Hz)		47–63				
Weight (kg)			0.8	0.9	1.2		
Cooling Method			Depends on customer equipment cooling				
EMC Filter			Optional				
IP Rating			IP20 (Cable side IP00)				

Table 9-9

NOTE:

1. Output*: Default is heavy duty.
2. The value of the carrier frequency is a factory default. Decrease the current value if you need to increase the carrier frequency. Refer to Section 9-7 Derating for Ambient Temperature and Altitude for details.
3. For shock or impact load applications, select a drive with a larger capacity model.

9-4 575V Models

575V models three-phase

Frame			A	B	C		D	
Model VFD_ _ _ _ _ _ _ _AA			1A7MS53ANS	3A0MS53ANS	4A2MS53ANS	6A6MS53ANS	9A9MS53ANS	12AMS53ANS
Applicable Motor Output (kW)			0.75	1.5	2.2	3.7	5.5	7.5
Applicable Motor Output (HP)			1	2	3	5	7.5	10
Output*	Heavy Duty	Rated Output Capacity (kVA)	1.7	3	4.2	6.6	9.9	12.2
		Rated Output Current (A)	1.7	3	4.2	6.6	9.9	12.2
		Carrier Frequency (kHz)	2~15 (Default: 4)					
	Normal Duty	Rated Output Capacity (kVA)	2.1	3.6	5	8	11.5	15
		Rated Output Current (A)	2.1	3.6	5	8	11.5	15
		Carrier Frequency (kHz)	2~15 (Default: 4)					
Input	Rated Input Current (A)	Heavy Duty	2	3.5	4.9	7.7	11.5	14.2
		Normal Duty	2.4	4.2	5.8	9.3	13.4	17.5
	Rated Voltage / Frequency		Three-phase 500–600 V_{AC} (-15–10%), 50 / 60 Hz					
	Mains Input Voltage Range (V_{AC})		425–660					
	Mains Frequency Range (Hz)		47–63					
Weight (kg)			0.85	0.87	1.18	1.29	2.04	
Cooling Method			Convective cooling	Fan cooling				
EMC Filter			Optional					
IP Rating			IP20					

Table 9-10

NOTE:

1. Output*: Default is heavy duty.
2. The value of the carrier frequency is a factory default. Decrease the current value if you need to increase the carrier frequency. Refer to Section 9-7 Derating for Ambient Temperature and Altitude for details.
3. For shock or impact load applications, select a drive with a larger capacity model.

9-5 General Specifications

Control Characteristics	Control Method	V/F, SVC, FOC Sensorless
	Applicable Motor	IM (Induction Motor), Simple PM motor control (IPM and SPM)
	Starting Torque*1	150% / 3 Hz (V/F, SVC control for IM, heavy duty, rated) 100% / (motor rated frequency/20) (SVC control for PM, heavy duty, rated) 200% / 0.5 Hz (FOC control for IM, heavy duty, rated)
	Speed Control Range*1	1: 50 (V/F, SVC control for IM, heavy duty, rated) 1: 20 (SVC control for PM, heavy duty, rated) 1: 100 (FOC control for IM, heavy duty, rated)
	Max. Output Frequency	0.00–599.00 Hz
	Overload Capacity	Normal duty: 120% of rated current can endure for 1 minute during every 5 minutes 150% of rated current can endure for 3 seconds during every 30 seconds. Heavy duty: 150% of rated current can endure for 1 minute during every 5 minutes 200% of rated current can endure for 3 seconds during every 30 seconds
	Frequency Setting Signal	0–10 V / -10–10 V 4–20 mA / 0–10 V 1 channel pulse input (33 kHz), 1 channel pulse output (33 kHz)
	Main Functions	Multiple motor switching (a maximum of four independent motor parameter settings), Fast start-up, Deceleration Energy Back (DEB) function, Wobble frequency function, Fast deceleration function, Master and Auxiliary frequency source selectable, Restart after momentary power loss, Speed tracking, Over-torque detection, 16-step speed (including the master speed), Accel./decel. time switch, S-curve accel./decel., three-wire operation control, JOG frequency, Frequency upper/lower limit settings, DC brake at start-up and stop, PID control, Built-in PLC (2000 steps), and Simple positioning function.
	Application Macro	Built-in application parameter groups (selected by industry) and user-defined application parameter groups.
Protection Characteristics	Motor Protection	Over-current, Over-voltage, Over-heating, Phase loss.
	Stall Prevention	Stall prevention during acceleration, deceleration and running (independent settings).
Accessory	Communication Cards	DeviceNet, EtherNet/IP, PROFIBUS DP, Modbus TCP, CANopen, EtherCAT
	External DC Power Supply	EMM-BPS01 (24 V power backup supply card)
Certifications*2		UL, CE, RCM, TÜV (SIL 2), RoHS, REACH
Safety Function*2		TUV (SIL2)

Table 9-11

NOTE:

1. Control accuracy may vary depending on the environment, application conditions or different motors. For more information, contact Delta or your local distributors.
2. For information on Certifications and Declaration of Conformity (DoC), visit Delta | Download Center (deltaww.com).
3. The plate-mounting models do not have UL and RCM certification, the 2.2–3.7kW models are expected to obtain TUV certification in Q3 2024.

9-6 Environment for Operation, Storage and Transportation

DO NOT expose the AC motor drive to a poor environment, such as one with dust, direct sunlight, corrosive/ inflammable gasses, humidity, liquids, or excessive vibration. The salt in the air must be less than 0.01 mg/cm^2 every year.				
Environment	Installation Location	IEC 60364-1/ IEC 60664-1 Pollution degree 2, Indoor use only.		
	Surrounding Temperature	Operation	IP20 / UL Open Type	-20–50°C -20–60°C with derating
			IP40 / NEMA 1 / UL Type 1	-20–40°C
			Side-by-side Installation	-20–50°C with derating
		Storage	-40–85°C / -20~70°C (plate-mounting models)	
		Transportation	-20–70°C	
		Non-condensing, non-freezing The backing board heat dissipation temperature of the plate-mounting models need to be ≤ 90°C.		
	Rated Humidity	Operation	Maximum 90%	
		Storage / Transportation	Maximum 95%	
		No water condensation		
	Air Pressure	Operation	86–106 kPa	
		Storage/ Transportation	70–106 kPa	
	Pollution Level	IEC 60721-3		
		Storage	Class 1C2; Class 1S2	
		Transportation	Class 2C2; Class 2S2	
		Operation	Class 3C2; Class 3S2	
		Concentrate prohibited If the plate-mounting model is used or installed in a poor industrial environment (such as condensation, water, dust, etc.), please install the product in an IP54 environment (such as a cabinet).		
	Altitude	< 1000 m (For altitudes > 1000 m, derate to use it.)		
Package Drop	Storage	ISTA procedure 1A (according to weight) IEC 60068-2-31		
	Transportation			
Vibration	Operating	• 1.0 mm, peak to peak value range from 2–13.2 Hz • 0.7–2.0 G range from 13.2–55 Hz • 2.0 G range from 55–512 Hz • Compliance with IEC 60068-2-6		
	Non-operating	2.5 G peak, 5 Hz–2 kHz, 0.015" maximum displacement		
Impact	Operating	15 G, 11 ms Compliance with IEC/EN60068-2-27		
	Non-operating	30 G		

Table 9-12

9-7 Derating for Ambient Temperature, Altitude and Carrier Frequency

9-7-1 Derating Curve for Ambient Temperature and Altitude

Protection Level	Operating Environment
IP20 / UL Open Type	If the AC motor drive operates at the rated current, the ambient temperature needs to be between -20–50°C. If the temperature is above 50°C, decrease 2.5% of the rated current for every 1°C increase in temperature. The maximum allowable temperature is 60°C.
IP40 / NEMA1 / UL Type 1	If the AC motor drive operates at the rated current, the ambient temperature needs to be between -20–40°C. If the temperature is above 40°C, decrease 2.5% of the rated current for every 1°C increase in temperature. The maximum allowable temperature is 60°C.
High Altitude	If the AC motor drive is installed at an altitude of 0–1000 m, follow normal operation restrictions. For altitudes of 1000–2000 m, decrease the drive's rated current by 1% or lower the temperature by 0.5°C for every 100 m increase in altitude. The maximum altitude for corner grounded is 2000 m. If installing at an altitude higher than 2000 m is required, contact Delta for more information.

Table 9-13

Ambient Temperature Derating Curve

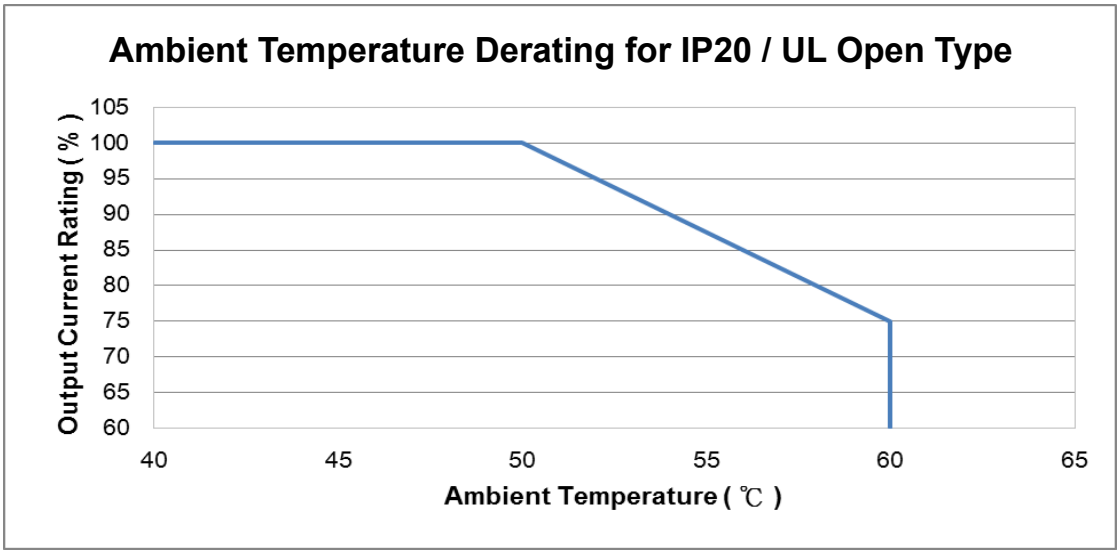

Figure 9-1

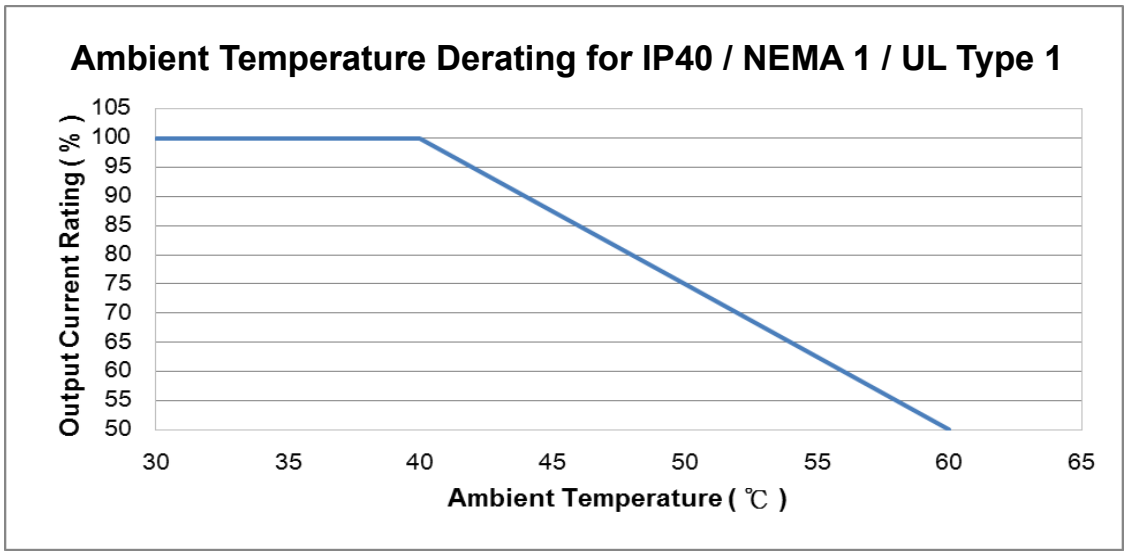

Figure 9-2

For IP20 / UL Open Type

Current derating at ambient temperature				
Ambient temperature		40˚C	45˚C	50˚C
Operating altitude above sea level (m)	0–1000	100%		
	1001–1500	100%		95%
	1501–2000	100%	95%	90%

Table 9-14

For IP40 / NEMA1 / UL Type 1

Current derating at ambient temperature				
Ambient temperature		30˚C	35˚C	40˚C
Operating altitude above sea level (m)	0–1000	100%		
	1001–1500	100%		95%
	1501–2000	100%	95%	90%

Table 9-15

Altitude Derating Curve

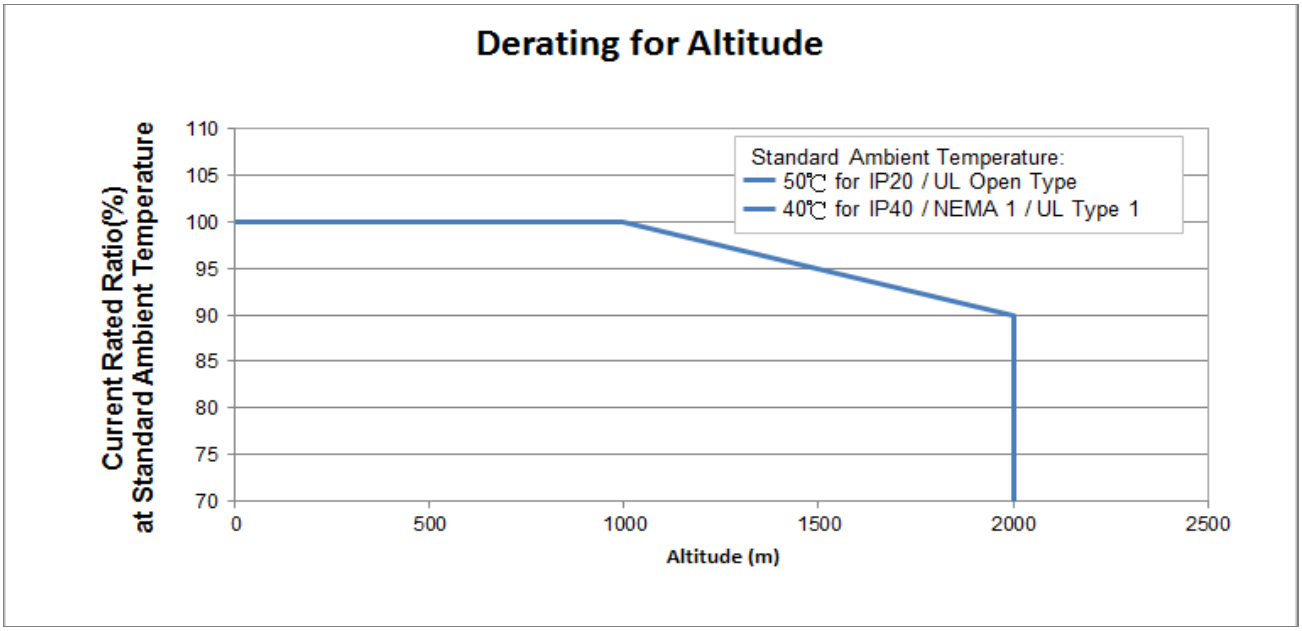

Figure 9-3

9-7-2 Derating Curve for Each Installation Method

- Single drive installation

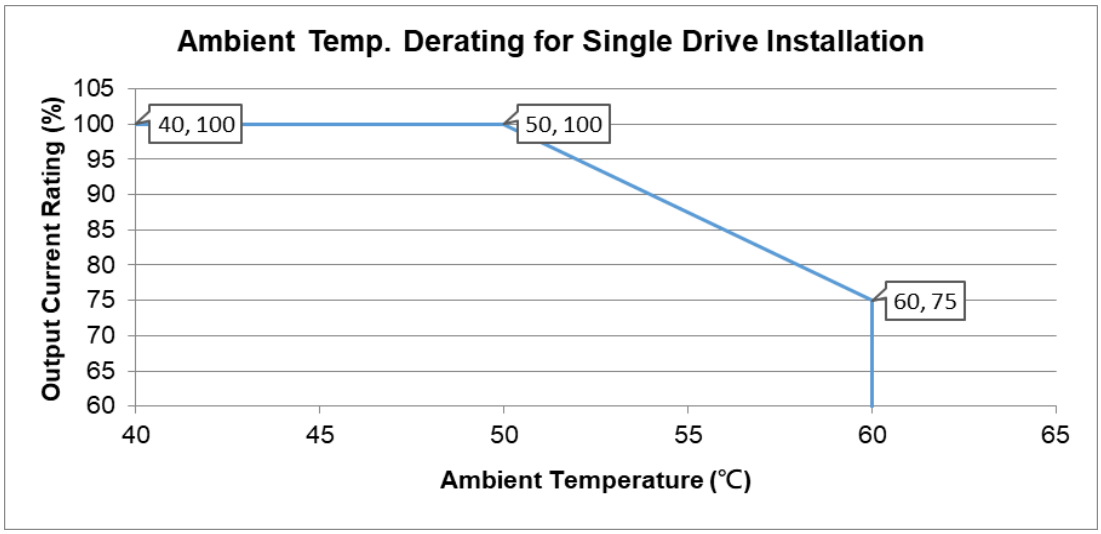

Figure 9-4

- Side-by-side horizontal installation

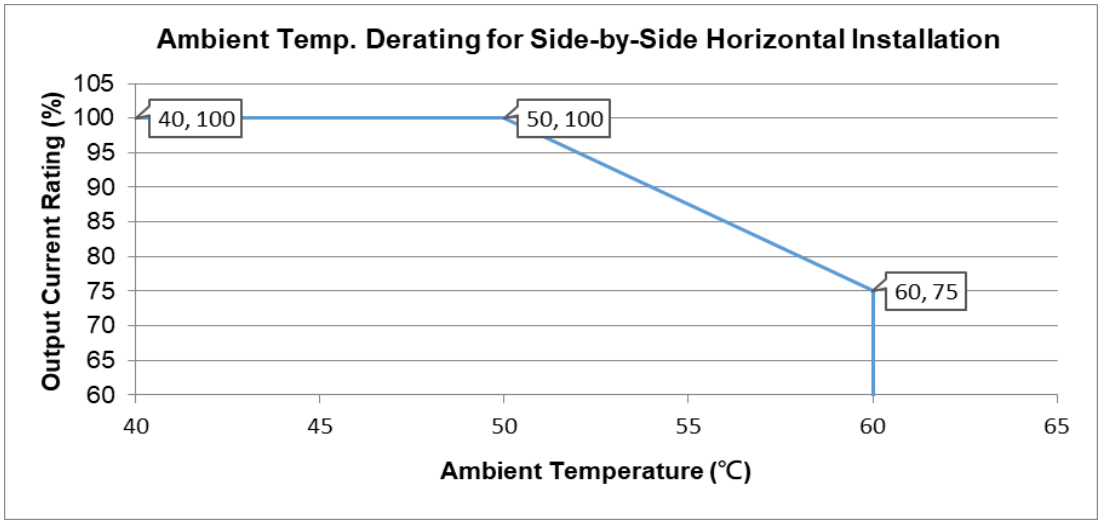

Figure 9-5

- Zero-stack installation

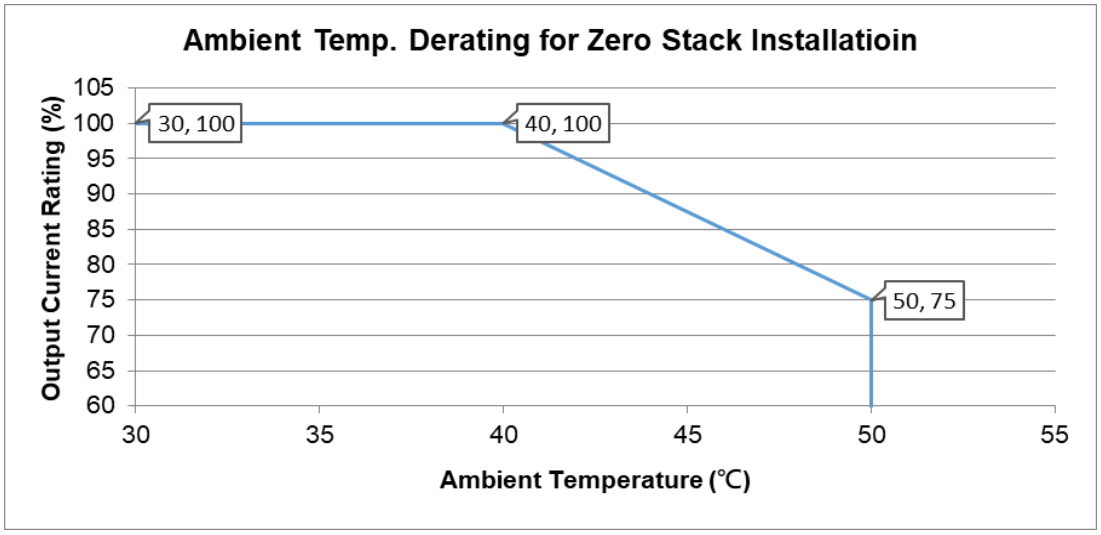

Figure 9-6

9-7-3 Derating Curve for Carrier Frequency

Normal load (Pr.00-16 = 0)

- Space Vector Modulation Mode (Pr.11-41 = 2)

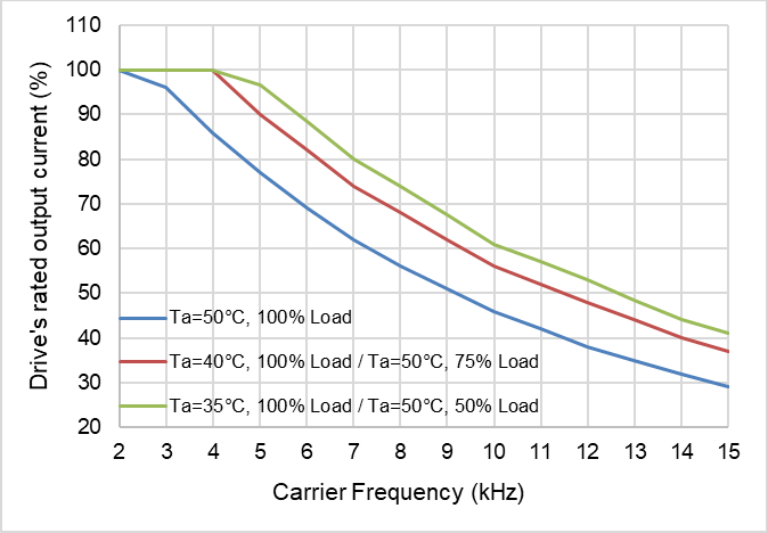

Figure 9-7

The rated output current (%) of SVPWM in normal load for different carrier frequencies:

Carrier Freq. (kHz) / Ambient Temp. (Ta), 100% Load	2	3	4	5	6	7	8	9	10	11	12	13	14	15
50°C	100	96	86	77	69	62	56	51	46	42	38	35	32	29
40°C	100	100	100	90	82	74	68	62	56	52	48	44	40	37
35°C	100	100	100	96.5	88.5	80	74	67.5	61	57	53	48.5	44	41

Table 9-16

- Two-phase Modulation Mode (Pr.11-41 = 0)

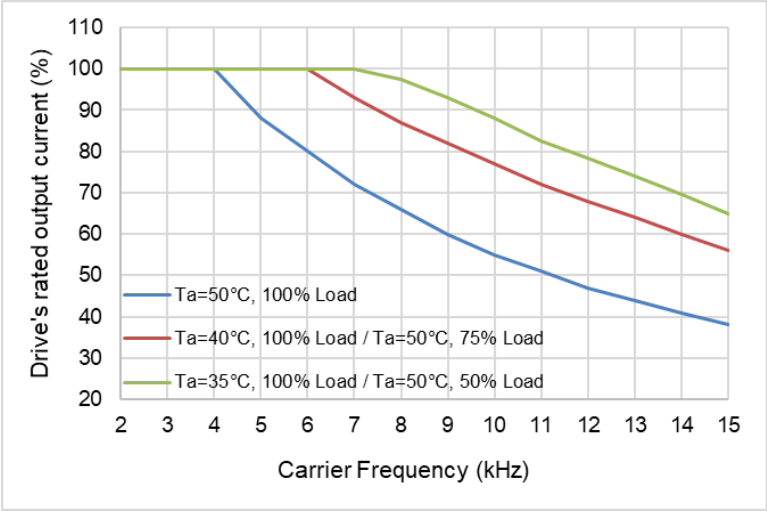

Figure 9-8

The rated output current (%) of DPWM in normal load for different carrier frequencies:

Carrier Freq. (kHz) / Ambient Temp. (Ta), 100% Load	2	3	4	5	6	7	8	9	10	11	12	13	14	15
50°C	100	100	100	88	80	72	66	60	55	51	47	44	41	38
40°C	100	100	100	100	100	93	87	82	77	72	68	64	60	56
35°C	100	100	100	100	100	100	97.5	93	88	82.5	78.5	74	69.5	65

Table 9-17

Heavy load (Pr.00-16 = 1)

- Space Vector Modulation Mode (Pr.11-41 = 2)

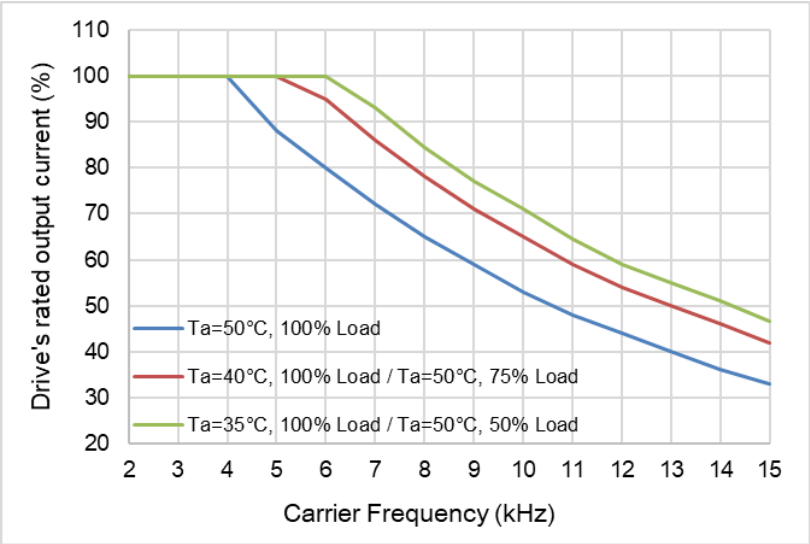

Figure 9-9

The rated output current (%) of SVPWM in heavy load for different carrier frequencies:

Carrier Freq. (kHz) / Ambient Temp. (Ta), 100% Load	2	3	4	5	6	7	8	9	10	11	12	13	14	15
50°C	100	100	100	88	80	72	65	59	53	48	44	40	36	33
40°C	100	100	100	100	95	86	78	71	65	59	54	50	46	42
35°C	100	100	100	100	100	93	84.5	77	71	64.5	59	55	51	46.5

Table 9-18

- Two-phase Modulation Mode (Pr.11-41 = 0)

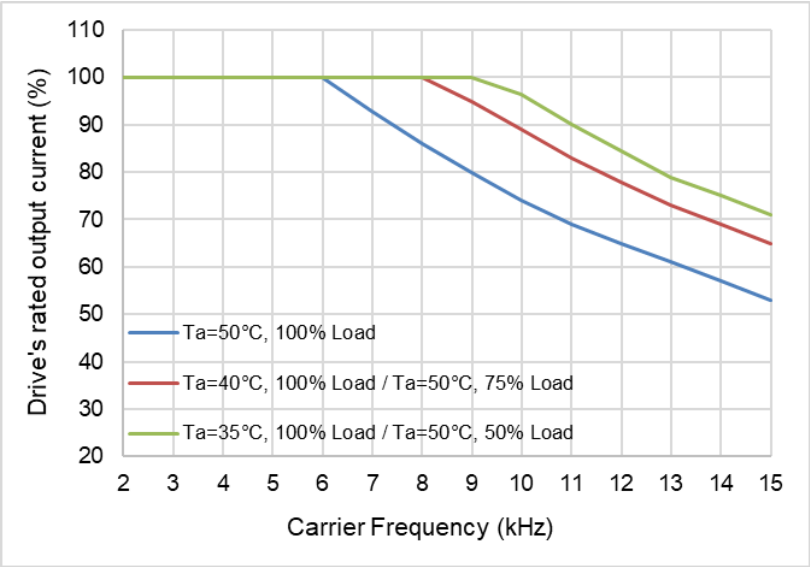

Figure 9-10

The rated output current (%) of DPWM in heavy load for different carrier frequencies:

Carrier Freq. (kHz) / Ambient Temp. (Ta), 100% Load	2	3	4	5	6	7	8	9	10	11	12	13	14	15
50°C	100	100	100	100	100	93	86	80	74	69	65	61	57	53
40°C	100	100	100	100	100	100	100	95	89	83	78	73	69	65
35°C	100	100	100	100	100	100	100	100	96.5	90	84.5	79	75	71

Table 9-19

Chapter 10 Digital Keypad

10-1 KPMS-LE01 Keyboard Panel

10-2 Keypad Operation Process

10-3 Reference Table for the Seven-segment Digital Keypad LED Display

10-1 KPMS-LE01 Keyboard Panel

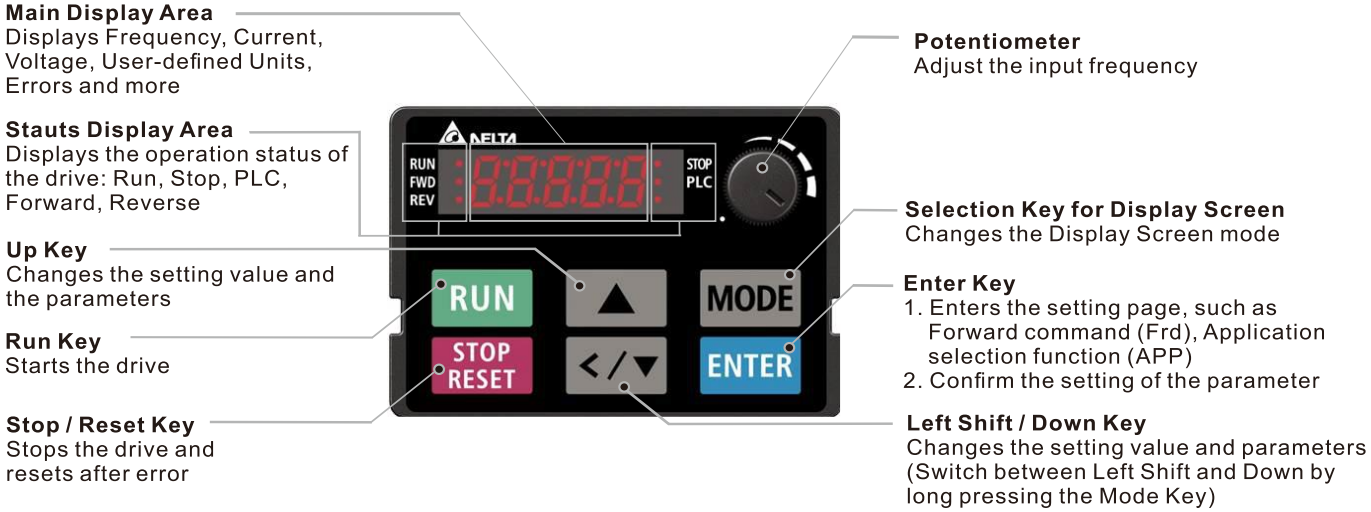

Descriptions of Keypad Functions

Displayed items	Descriptions
RUN FWD REV F60.00 STOP PLC	Displays the present frequency setting for the drive.
RUN FWD REV H50.00 STOP PLC	Displays the actual output frequency to the motor.
RUN FWD REV U 180 STOP PLC	Displays the user-defined output of a physical quantity. This example uses Pr.00-04=30 (user-defined output).
RUN FWD REV A 5.00 STOP PLC	Displays the load current.
RUN FWD REV Frd STOP PLC	Forward command
RUN FWD REV rEv STOP PLC	Reverse command
RUN FWD REV c 20 STOP PLC	Displays the count value.
RUN FWD REV 06.00 STOP PLC	Displays a parameter item.
RUN FWD REV 10 STOP PLC	Displays a parameter value.
RUN FWD REV EF STOP PLC	Displays an external fault.
RUN FWD REV End STOP PLC	Displays “End” for approximately one second if the data has been accepted and automatically stored in the register.
RUN FWD REV Err STOP PLC	Displays if the setting data is not accepted or data value exceeds the allowed range.
RUN FWD REV dELtA STOP PLC	Displays the drive is in the booting process, and the display will be cleared when the process is finished.

10-2 Keypad Operation Process

A. Main Page Selection

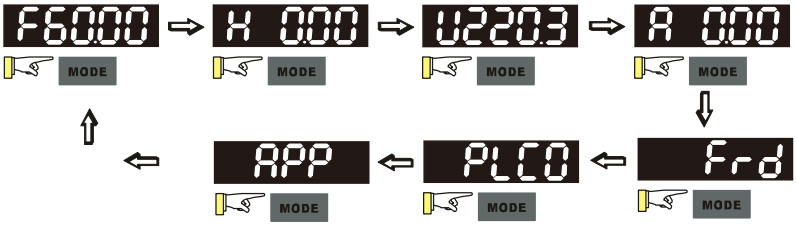

Note 1: In screen selection mode, press ENTER to set the parameters.

Note 2: App displays only when Pr.13-00≠0

Setting parameters

Note: In the parameter setting mode, you can press ENTER to return to the selection mode.

To shift data

Setting direction

(When the operation source is the digital keypad)

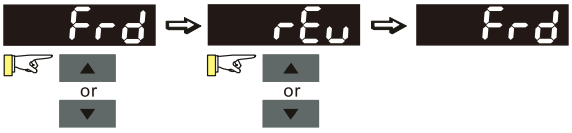

PLC setting

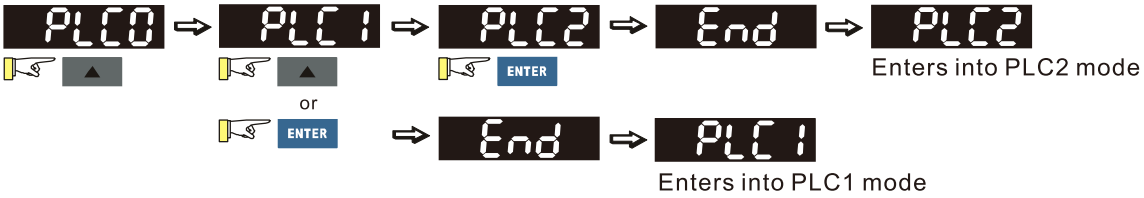

Copy Parameter (Copy parameter to Keypad)

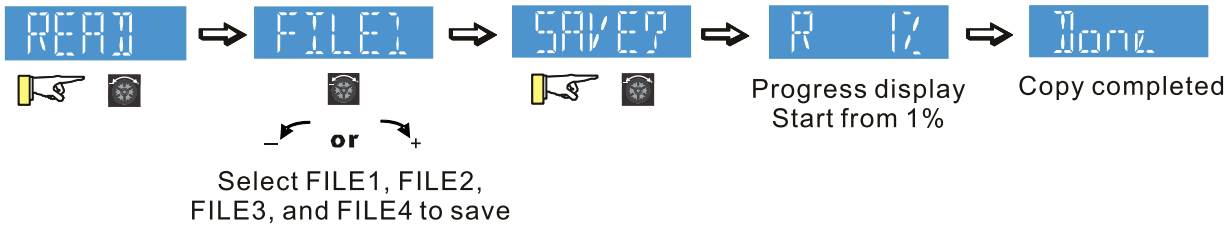

Copy Parameter (Copy parameter to the drive)

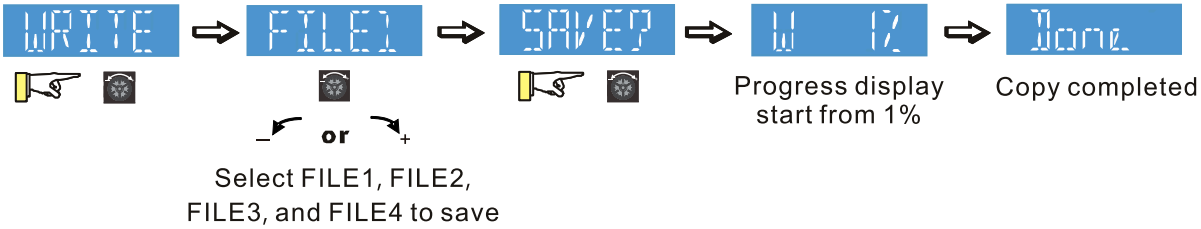

NOTE:

MS300 digital keypad does not support parameter copy functions. You must use the MH300 digital keypad KPMH-LC01 to perform the parameter copy functions.

For details on how to use the digital keypad KPMH-LC01, see Chapter 10 in the MH300 user manual.

B. F Page (Frequency command setting page)

General Mode 1

(The maximum operation frequency Pr.01-00 is in two decimal places. For example: Pr.01-00 = 60.00 Hz.)

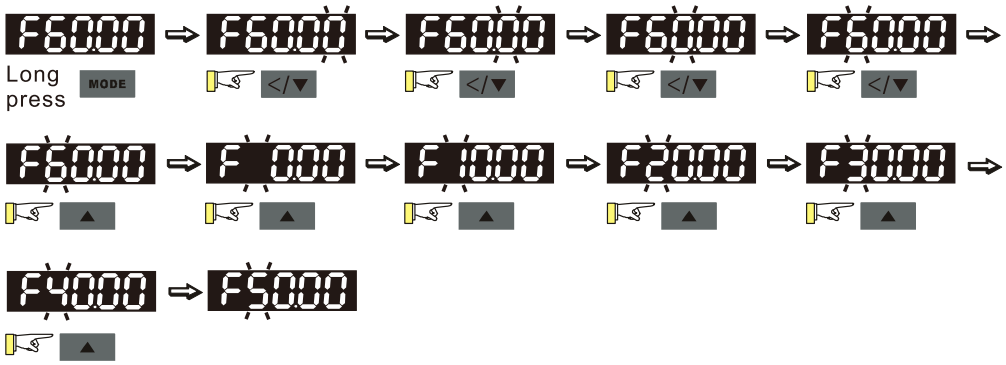

General Mode 2

(The maximum operation frequency Pr.01-00 is in three decimal places. For example:Pr.01-00 = 599.0 Hz.)

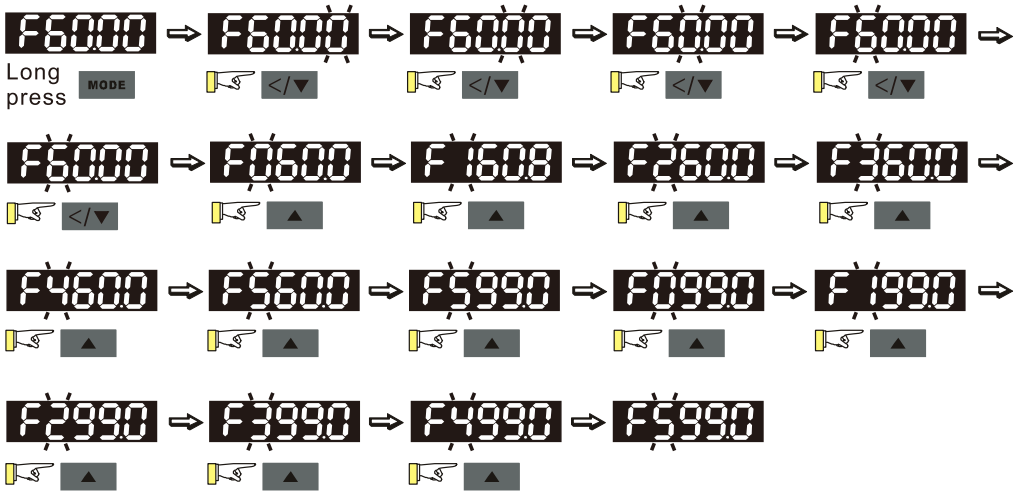

C. Application Macro Selection Page

Go to Parameter Group 13 to set the application macro functions. The application macro function is enabled when Pr.13-00 ≠ 0.

Once enabled, the Application Marco Selection page displays “APP”. If Pr.13-00 = 0, the APP page does not display.

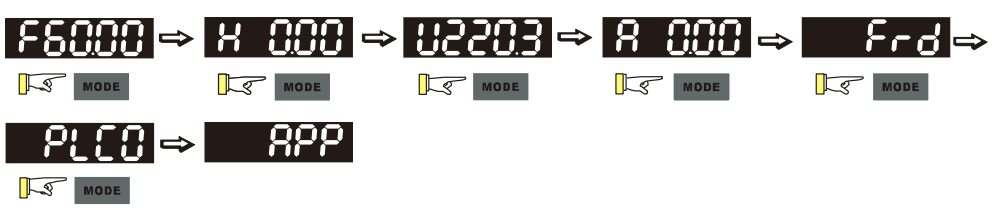

Application Selection

When Pr.13-00 ≠ 0, you enter into the APP page. After you press ENTER, the screen displays a corresponding short name according to Pr.13-00 setting values. Follow the process below to set the industry-specific application macro parameters.

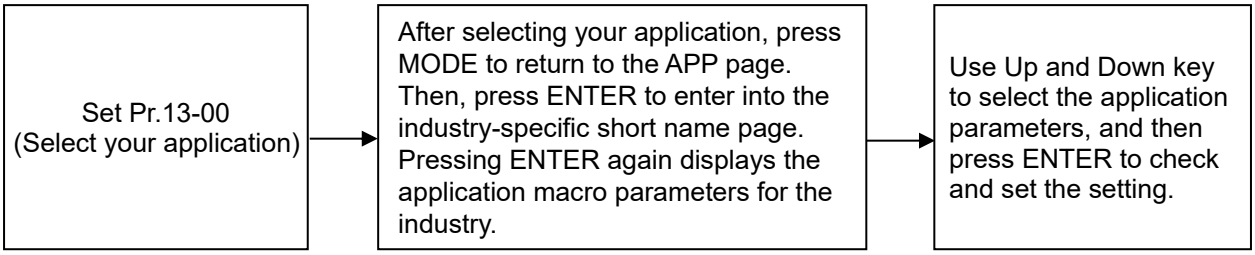

Example:

When Pr.13-00 = 2, you enter into the APP page. After you press ENTER, the screen displays "CoPr" and the compressor application macro parameters are enabled. Then, press ENTER again to check the industry-specific parameter sets. Press Up and Down keys to select the parameter to set. Finally, press ENTER to set the parameter values. For other industry application, follow the same process.

User-defined Application

Set Pr.13-00 = 1 to enable the user-defined applications. The “USEr” appears in the APP page after pressing ENTER.

(If Pr.13-00 = 1 and you do not set any parameters for Pr.13-01–Pr.13-50, you cannot enter the sub-layer of the USEr page.)

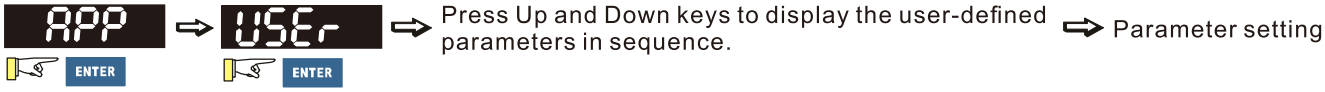

Follow the process below to set the user-defined application selection (Pr.13-00 = 1).

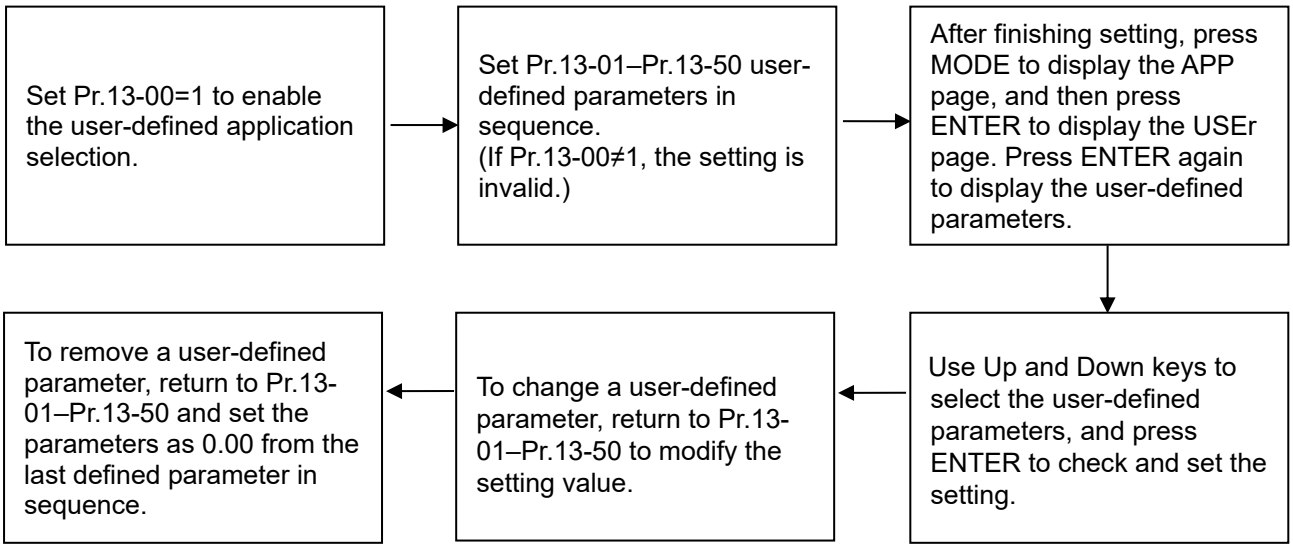

1. Use Pr.13-01–Pr.13-50 to set the user-defined parameters in sequence according to your requirement. The default setting 0.00 means there is no user-defined parameter. Press ENTER to set the corresponding parameters for Pr.13-01– Pr.13-50.
2. The setting method of user-defined parameters is the same as that for non-user-defined parameters. You can use Up and Down keys or left shift key to speed up the settings.

Example:

Setting Pr.13-01 to the user-defined parameter 04-00. First, press ENTER at Pr.13-01 to enter the setting page. Then, long press MODE to enable the left shift key to start the setting. The setting process shows as follows.

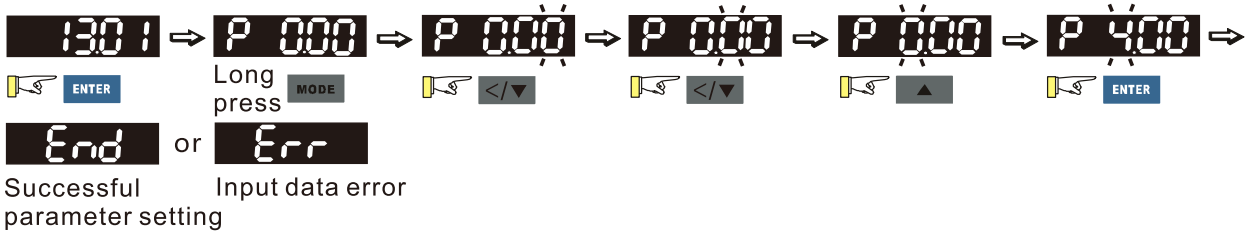

NOTE: You must set Pr.13-01, 02……50 in sequence, or the display shows “Err”.

3. After finishing the setting, press MODE to return to the APP page, and then press ENTER. The keypad displays “USEr”. After you press ENTER again, the corresponding parameter that you set appears.

Example:

If you set Pr.13-01 as the user-defined parameter Pr.04-00, and Pr.13-02 as Pr.04-01, the parameters you set appear when you press ENTER at the “USEr” page.

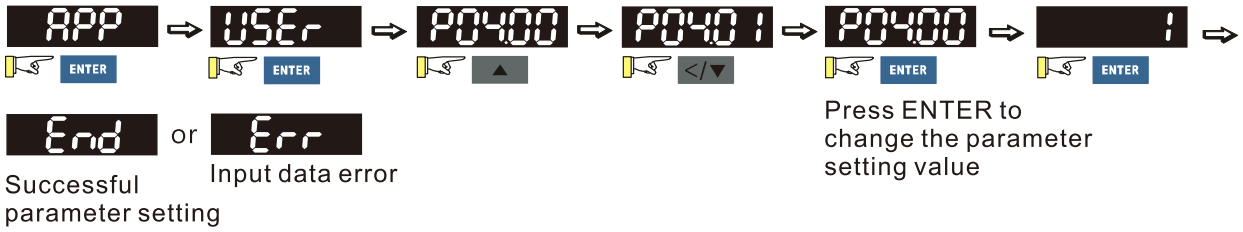

Note: In the mode of parameter settings, pressing MODE returns to the main page selection.

4. To remove a set user-defined parameter, remove from the last defined parameter (set to 0.00) first, or the display shows “Err”.

   For example, if there are five user-defined parameters (Pr.13-01, 13-02…13-05), to remove Pr.13-02, you must remove Pr.13-05 first, then 13-04, then 13-03, and then 13-02.

D. Parameter setting

D-1. Unsigned parameter

(Parameter setting range ≥ 0; for example, Pr.01-00)

1. Without using the left shift key: Use Up and Left/Down key to select and adjust the parameters. Then, press ENTER to start the parameter settings.
2. Using the left shift key: Long press MODE for two seconds until the last digit of the parameter value starts to blink. Increase the value by pressing the Up key. The value goes back to 0 after 9.
3. Press left/down key to shift the blinking cursor one digit to the left, and increase the value by pressing the Up key.
4. After you finish setting the parameter, the left shift key function is not disabled automatically until you disable it manually by pressing MODE for two seconds.

Example:

The default setting for Pr.01-00 is 60.00. Long pressing MODE for two seconds enables the left shift function. The process for pressing the Left/Down key shows as follows:

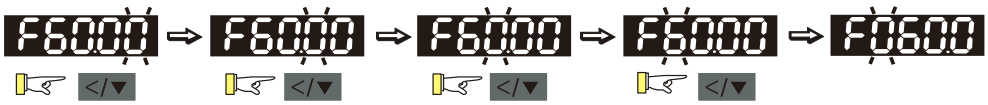

The upper limit for Pr.01-00 is 599.00. If you set a value greater than 599.00, “Err” appears after you press ENTER, and then the keypad shows the upper limit (599.00) for a second to remind you of the incorrect setting. The setting value remains as the original set value and the cursor returns to the last digit.

D-2. Minus-signed parameter setting status 1

(Parameter setting range can be < 0; for example, Pr.03-03)

1. Without using the left shift key: Use Up and Left/Down key to select and adjust the parameters. Then, press ENTER to start the parameter settings.
2. Using the left shift key: Long press MODE for two seconds until the last digit of the parameter value starts to blink. Increase the value by pressing the Up key. The value goes back to 0 after 9.
3. Press left/down key to shift the blinking cursor one digit to the left, and increase the value by pressing the Up key. When you shift to the first digit and press the Up key, the digit “0” changes to “-” (minus).
4. After you finish setting the parameter, the left shift key function is not disabled automatically until you disable it manually by pressing MODE for two seconds.

Example:

The default setting for Pr.03-03 is 0.0. Long pressing MODE for two seconds enables the left shift function. The process for pressing the Left/Down key shows as follows:

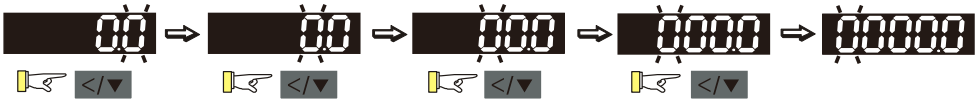

The upper limit for Pr.03-03 is 100.0 and lower limit is -100.0. If you set a value greater than 100.0 or less than -100.0, “Err” appears after you press ENTER, and then the keypad shows the upper limit (100.0) or lower limit (-100.0) for a second to remind you of the incorrect setting. The setting value remains as the original set value, and the cursor returns to the last digit.

D-3. Minus-signed parameter setting status 2

(Parameter setting range can be < 0, and the lower limit is ≤ -100.00 with two decimal places; for example, Pr.03-74)

1. Without using the left shift key: Use Up and Left/Down key to select and adjust the parameters. Then, press ENTER to start the parameter settings.
2. Using the left shift key: Long press MODE for two seconds until the last digit of the parameter value starts to blink. Increase the value by pressing the Up key. The value goes back to 0 after 9.
3. Press the left/down key to shift the blinking cursor one digit to the left, and increase the value by pressing the Up key. When you shift to the first digit and press the Up key, the digit “0” changes to “-” (minus).
4. For parameter values with three digits and two decimal places and a positive/negative setting range (Pr.03-74, -100.00–100.00%), the keypad only displays four digits (-100.0 or 100.0). Example:

The default setting for Pr.03-74 is -100.0. If you increase the parameter value by 0.01, the display shows -99.99, with four digits only. Long pressing MODE for two seconds enables the left shift function. The process for pressing the Left/Down key shows as follows:

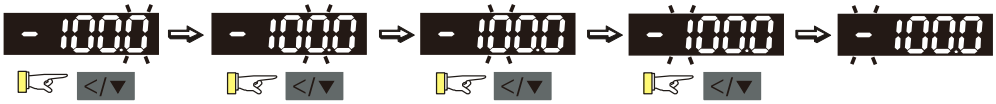

The upper limit for Pr.03-74 is 100.00 and lower limit is -100.00. If you set a value greater than 100.0 or less than -100.0, “Err” appears after you press ENTER, and then the keypad shows the upper limit (100.0) or lower limit (-100.0) (only one decimal place is displayed) for a second to remind you of the incorrect setting. The setting value remains as the original set value, and the cursor returns to the last digit.

10-3 Reference Table for the Seven-segment Digital Keypad LED Display

Number	0	1	2	3	4	5	6	7	8	9
Display	0	1	2	3	4	5	6	7	8	9
Number	A	a	B	b	C	c	D	d	E	e
Display	A	-	-	b	C	c	-	d	E	-
Number	F	f	G	g	H	h	I	i	J	j
Display	F	-	G	-	H	h	-	i	J	j
Number	K	k	L	l	M	m	N	n	O	o
Display	K	-	L	-	-	-	-	n	-	o
Number	P	p	Q	q	R	r	S	s	T	t
Display	P	-	-	q	-	r	S	-	-	t
Number	U	u	V	v	W	w	X	x	Y	y
Display	U	u	-	v	-	-	-	-	Y	-
Number	Z	z								
Display	Z	-								

Chapter 11 Summary of Parameter Settings

00 Drive Parameters

01 Basic Parameters

02 Digital Input / Output Parameters

03 Analog Input / Output Parameters

04 Multi-step Speed Parameters

05 Motor Parameters

06 Protection Parameters (1)

07 Special Parameters

08 High-function PID Parameters

09 Communication Parameters

10 Speed Feedback Control Parameters

11 Advanced Parameters

13 Industry Application Parameters

14 Protection Parameters (2)

This chapter provides a summary of parameter (Pr.) setting ranges and defaults. You can set, change, and reset parameters through the digital keypad.

NOTE:

✓: You can set this parameter during operation.

The following are abbreviations for different types of motors:

- IM: Induction motor
- PM: Permanent magnet synchronous AC motor
- IPM: Interior permanent magnet synchronous AC motor
- SPM: Surface permanent magnet synchronous AC motor

00 Drive Parameters

Pr.	Explanation	Settings	Default
00-00	AC Motor Drive Identity Code	102: 115 V, 1 Phase, 0.25 HP 103: 115 V, 1 Phase, 0.5 HP 104: 115 V, 1 Phase, 1 HP 302: 230 V, 1 Phase, 0.25 HP 303: 230 V, 1 Phase, 0.5 HP 304: 230 V, 1 Phase, 1 HP 305: 230 V, 1 Phase, 2 HP 306: 230 V, 1 Phase, 3 HP 202: 230 V, 3 Phase, 0.25 HP 203: 230 V, 3 Phase, 0.5 HP 204: 230 V, 3 Phase, 1 HP 205: 230 V, 3 Phase, 2 HP 206: 230 V, 3 Phase, 3 HP 207: 230 V, 3 Phase, 5 HP 208: 230 V, 3 Phase, 7.5 HP 209: 230 V, 3 Phase, 10 HP 210: 230 V, 3 Phase, 15 HP 211: 230 V, 3 Phase, 20 HP 403: 460 V, 3 Phase, 0.5 HP 404: 460 V, 3 Phase, 1 HP 405: 460 V, 3 Phase, 2 HP 406: 460 V, 3 Phase, 3 HP 407: 460 V, 3 Phase, 5 HP 408: 460 V, 3 Phase, 7.5 HP 409: 460 V, 3 Phase, 10 HP 410: 460 V, 3 Phase, 15 HP 411: 460 V, 3 Phase, 20 HP 412: 460 V, 3 Phase, 25 HP	Read only

	Pr.	Explanation	Settings	Default
			413: 460 V, 3 Phase, 30 HP 482: 460 V, 3 Phase, 4 HP 504: 575 V, 3 Phase, 1 HP 505: 575 V, 3 Phase, 2 HP 506: 575 V, 3 Phase, 3 HP 507: 575 V, 3 Phase, 5 HP 508: 575 V, 3 Phase, 7.5 HP 509: 575 V, 3 Phase, 10 HP	
	00-01	AC Motor Drive Rated Current Display	Display by models	Read only
	00-02	Parameter Reset	0: No function 1: Write protection for parameters 5: Return kWh displays to 0 6: Reset PLC (including CANopen Master Index) 7: Reset CANopen Slave index 8: Keypad does not respond 9: Reset all parameters to defaults (base frequency is 50 Hz) 10: Reset all parameters to defaults (base frequency is 60 Hz) 11: Reset all parameters to defaults with base frequency at 50 Hz (keep the user-defined parameter values Pr.13-01–Pr.13-50) 12: Reset all parameters to defaults with base frequency at 60 Hz (keep the user-defined parameter values Pr.13-01–Pr.13-50)	0
✓	00-03	Start-Up Display	0: F (frequency command) 1: H (output frequency) 2: U (user-defined, see Pr.00-04) 3: A (output current)	0
✓	00-04	Content of Multi-Function Display (User-Defined)	0: Display output current (A) (unit: Amp) 1: Display counter value (c) (unit: CNT) 2: Display the drive's actual output frequency (H.) (unit: Hz) 3: Display the drive's DC bus voltage (V) (unit: V_{DC}) 4: Display the drive's output voltage (E) (unit: V_{AC}) 5: Display the drive's output power angle (n) (unit: deg) 6: Display the drive's output power (P) (unit: kW) 7: Display the motor speed rpm (r) (unit: rpm)	3

Pr.	Explanation	Settings	Default
		8: Display the drive's estimated output torque, motor's rated torque is 100% (t) (unit: %) 10: Display PID feedback (b) (unit: %) 11: Display AVI analog input terminal signal (1.) (unit: %) 12: Display ACI analog input terminal signal (2.) (unit: %) 14: Display the drive's IGBT temperature (i.) (unit: ºC) 16: The digital input status (ON / OFF) (i) 17: The digital output status (ON / OFF) (o) 18: Display multi-step speed (S) 19: The corresponding CPU digital input pin status (d) 20: The corresponding CPU digital output pin status (0.) 22: Pulse input frequency (S.) 25: Overload count (0.00–100.00%) (o.) (unit: %) 26: Ground fault GFF (G.) (unit: %) 27: DC bus voltage ripple (r.) (unit: V_{DC}) 28: Display PLC register D1043 data (C) 30: Display the output of User-defined (U) 31: Display Pr.00-05 user gain (K) 35: Control mode display: 0 = Speed control mode (SPD) 1 = Torque control mode (TQR) (t.) 36: Present operating carrier frequency of the drive (J.) (Unit: Hz) 38: Display the drive status (6.) 39: Display the drive's estimated output torque, positive and negative, using Nt-m as unit (t 0.0: positive torque; -0.0: negative torque) (C.) 40: Torque command (L.) (unit: %) 41: kWh display (J) (unit: kWh) 42: PID target value (h.) (unit: %) 43: PID compensation (o.) (unit: %) 44: PID output frequency (b.) (unit: Hz) 46: Auxiliary frequency value (U.) (unit: Hz) 47: Master frequency value (A) (unit: Hz) 48: Frequency value after addition and subtraction of master and auxiliary frequency (L.) (unit: Hz)	

Pr.	Explanation	Settings	Default
		51: PMSVC torque offset 58: Pr.00-05 User gain display (K) (Does not display decimal places.) 62: I2t (o.) (unit: %) 63: Error code (E.) 64: Warning code (n.) 65: Accumulated motor operation record (day) (r.) (refer to Pr.05-32)	
00-05	Coefficient Gain in Actual Output Frequency	0.00–160.00	1.00
00-06	Firmware Version	Read only	Read only
00-07	Parameter Protection Password Input	0–65535 0–4: the number of password attempts allowed	0
00-08	Parameter Protection Password Setting	0–65535 0: No password protection or password entered correctly (Pr.00-07) 1: Parameter has been set	0
00-10	Control Mode	0: Speed Control mode 2: Torque mode	0
00-11	Speed Control Mode	0: IMVF (IM V/F control) 1: IMVFPG (IM V/F control + MI7 one-phase pulse input) 2: IM/PM SVC (IM / PM space vector control) 5: IMFOC Sensorless (IM field-oriented sensorless vector control)	0
00-16	Load Selection	0: Normal load 1: Heavy load	1
00-17	Carrier Frequency	Normal load: 2–15 kHz Heavy load: 2–15 kHz **NOTE:** When Pr.00-11 = 5 (IMFOC Sensorless), the maximum setting value for the carrier frequency is 10 kHz.	4 4
00-19	PLC Command Mask	bit 0: Control command is forced by PLC control bit 1: Frequency command is forced by PLC control bit 3: Torque command is forced by PLC control	Read only
00-20	Master Frequency Command Source (AUTO, REMOTE)	0: Digital keypad 1: RS-485 communication input 2: External analog input (Refer to Pr.03-00) 3: External UP / DOWN terminal (multi-function input terminals)	0

	Pr.	Explanation	Settings	Default
			4: Pulse input without direction command (refer to Pr.10-16 without considering direction) 6: CANopen communication card 7: Digital keypad potentiometer knob 8: Communication card (does not include CANopen card) 9: PID controller **NOTE:** HOA (Hand-Off-Auto) function is valid only when you use with MO function setting 42 and 56 or with KPC-CC01 (optional).	
	00-21	Operation Command Source (AUTO, REMOTE)	0: Digital keypad 1: External terminals 2: RS-485 communication input 3: CANopen communication card 5: Communication card (does not include CANopen card) **NOTE:** HOA (Hand-Off-Auto) function is valid only when you use with MO function setting 42 and 56 or with KPC-CC01 (optional)	0
✓	00-22	Stop Method	0: Ramp to stop 1: Coast to stop	0
✓	00-23	Motor Direction Control	0: Enable forward / reverse 1: Disable reverse 2: Disable forward	0
	00-24	Digital Operator (Keypad) Frequency Command Memory	Read only	Read only
✓	00-25	User-Defined Characteristics	bit 0–3: user-defined decimal places 0000h-0000b: no decimal place 0001h-0001b: one decimal place 0002h-0010b: two decimal places 0003h-0011b: three decimal places bit 4–5: user-defined unit 000xh: Hz 001xh: rpm 002xh: % 003xh: kg 004xh: m/s 005xh: kW	0

Pr.	Explanation	Settings	Default
		006xh: HP 007xh: ppm 008xh: 1/m 009xh: kg/s 00Axh: kg/m 00Bxh: kg/h 00Cxh: lb/s 00Dxh: lb/m 00Exh: lb/h 00Fxh: ft/s 010xh: ft/m 011xh: m 012xh: ft 013xh: degC 014xh: degF 015xh: mbar 016xh: bar 017xh: Pa 018xh: kPa 019xh: mWG 01Axh: inWG 01Bxh: ftWG 01Cxh: psi 01Dxh: atm 01Exh: L/s 01Fxh: L/m 020xh: L/h 021xh: m3/s 022xh: m3/h 023xh: GPM 024xh: CFM xxxxh: Hz	
00-26	Maximum User-Defined Value	0: Disable 0–65535 (when Pr.00-25 is set to no decimal place) 0.0–6553.5 (when Pr.00-25 is set to one decimal place) 0.00–655.35 (when Pr.00-25 is set to two decimal places) 0.000–65.535 (when Pr.00-25 is set to three decimal places)	0

Pr.	Explanation	Settings	Default
00-27	User-Defined Value	Read only	Read only
00-29	Local / Remote Selection	0: Standard HOA function 1: When switching between local and remote, the drive stops. 2: When switching between local and remote, the drive runs with REMOTE settings for frequency and operating status. 3: When switching between local and remote, the drive runs with LOCAL settings for frequency and operating status. 4: When switching between local and remote, the drive runs with LOCAL settings when switched to Local and runs with REMOTE settings when switched to Remote for frequency and operating status.	0
00-30	Master Frequency Command Source (HAND, LOCAL)	0: Digital keypad 1: RS-485 communication input 2: External analog input (refer to Pr.03-00) 3: External UP / DOWN terminal (multi-function input terminals) 4: Pulse input without direction command (refer to Pr.10-16 without considering direction) 6: CANopen communication card 7: Digital keypad potentiometer knob 8: Communication card (does not include CANopen card) 9: PID controller **NOTE:** HOA (Hand-Off-Auto) function is valid only when you use with MO function setting 41 and 56 or with KPC-CC01 (optional).	0
00-31	Operation Command Source (HAND, LOCAL)	0: Digital keypad 1: External terminal 2: RS-485 communication input 3: CANopen communication card 5: Communication card (does not include CANopen card) **NOTE:** HOA (Hand-Off-Auto) function is valid only when you use with MO function setting 41 and 56 or with KPC-CC01 (optional).	0

	Pr.	Explanation	Settings	Default
✓	00-32	Digital Keypad STOP Function	0: STOP key disabled 1: STOP key enabled	0
	00-35	Auxiliary Frequency Source	0: Master and auxiliary frequency function disabled 1: Digital keypad 2: RS-485 communication input 3: Analog input 4: External UP / DOWN key input (multi-function input terminals) 5: Pulse input without direction command (refer to Pr.10-16) 6: CANopen communication card 7: Digital keypad potentiometer knob 8: Communication card	0
	00-36	Master and Auxiliary Frequency Command Selection	0: Master + auxiliary frequency 1: Master - auxiliary frequency 2: Auxiliary - master frequency	0
	00-47	Output Phase Order Selection	0: Standard 1: Exchange the rotation direction	0
✓	00-48	Display Filter Time (Current)	0.001–65.535 sec.	0.100
✓	00-49	Display Filter Time (Keypad)	0.001–65.535 sec.	0.100
	00-50	Software Version (Date)	Read only	Read only

01 Basic Parameters

	Pr.	Explanation	Settings	Default
	01-00	Maximum Operation Frequency of Motor 1	0.00–599.00 Hz	60.00 / 50.00
	01-01	Rated / Base Frequency of Motor 1	0.00–599.00 Hz	60.00 / 50.00
	01-02	Rated / Base Voltage of Motor 1	115V / 230V models: 0.0–255.0 V 460V models: 0.0–510.0 V 575V models: 0.0–637.0 V	220.0 440.0 575.0
	01-03	Mid-Point Frequency 1 of Motor 1	0.00–599.00 Hz	3.00
✓	01-04	Mid-Point Voltage 1 of Motor 1	115V / 230V models: 0.0–240.0 V 460V models: 0.0–480.0 V 575V models: 0.0–600.0 V	11.0 22.0 40.0
	01-05	Mid-Point Frequency 2 of Motor 1	0.00–599.00 Hz	1.50
✓	01-06	Mid-Point Voltage 2 of Motor 1	115V / 230V models: 0.0–240.0 V 460V models: 0.0–480.0 V 575V models: 0.0–600.0 V	5.0 10.0 26.1
	01-07	Minimum Output Frequency of Motor 1	0.00–599.00 Hz	0.50
✓	01-08	Minimum Output Voltage of Motor 1	115V / 230V models: 0.0–240.0 V 460V models: 0.0–480.0 V 575V models: 0.0–600.0 V	1.0 2.0 16.7
	01-09	Start-Up Frequency	0.00–599.00 Hz	0.50
✓	01-10	Output Frequency Upper Limit	0.00–599.00 Hz	599.00
✓	01-11	Output Frequency Lower Limit	0.00–599.00 Hz	0.00
✓	01-12	Acceleration Time 1	Pr.01-45 = 0: 0.00–600.00 sec. Pr.01-45 = 1: 0.0–6000.0 sec.	10.00
✓	01-13	Deceleration Time 1	Pr.01-45 = 0: 0.00–600.00 sec. Pr.01-45 = 1: 0.0–6000.0 sec.	10.00
✓	01-14	Acceleration Time 2	Pr.01-45 = 0: 0.00–600.00 sec. Pr.01-45 = 1: 0.0–6000.0 sec.	10.00
✓	01-15	Deceleration Time 2	Pr.01-45 = 0: 0.00–600.00 sec. Pr.01-45 = 1: 0.0–6000.0 sec.	10.00
✓	01-16	Acceleration Time 3	Pr.01-45 = 0: 0.00–600.00 sec. Pr.01-45 = 1: 0.0–6000.0 sec.	10.00
✓	01-17	Deceleration Time 3	Pr.01-45 = 0: 0.00–600.00 sec. Pr.01-45 = 1: 0.0–6000.0 sec.	10.00

	Pr.	Explanation	Settings	Default
✓	01-18	Acceleration Time 4	Pr.01-45 = 0: 0.00–600.00 sec. Pr.01-45 = 1: 0.0–6000.0 sec.	10.00
✓	01-19	Deceleration Time 4	Pr.01-45 = 0: 0.00–600.00 sec. Pr.01-45 = 1: 0.0–6000.0 sec.	10.00
✓	01-20	JOG Acceleration Time	Pr.01-45 = 0: 0.00–600.00 sec. Pr.01-45 = 1: 0.0–6000.0 sec.	10.00
✓	01-21	JOG Deceleration Time	Pr.01-45 = 0: 0.00–600.00 sec. Pr.01-45 = 1: 0.0–6000.0 sec.	10.00
✓	01-22	JOG Frequency	0.00–599.00 Hz	6.00
✓	01-23	Switch Frequency between First and Fourth Accel. / Decel.	0.00–599.00 Hz	0.00
✓	01-24	S-Curve for Acceleration Begin Time 1	Pr.01-45 = 0: 0.00–25.00 sec. Pr.01-45 = 1: 0.0–250.0 sec.	0.20
✓	01-25	S-Curve for Acceleration Arrival Time 2	Pr.01-45 = 0: 0.00–25.00 sec. Pr.01-45 = 1: 0.0–250.0 sec.	0.20
✓	01-26	S-Curve for Deceleration Begin Time 1	Pr.01-45 = 0: 0.00–25.00 sec. Pr.01-45 = 1: 0.0–250.0 sec.	0.20
✓	01-27	S-Curve for Deceleration Arrival Time 2	Pr.01-45 = 0: 0.00–25.00 sec. Pr.01-45 = 1: 0.0–250.0 sec.	0.20
	01-28	Skip Frequency 1 (Upper Limit)	0.00–599.00 Hz	0.00
	01-29	Skip Frequency 1 (Lower Limit)	0.00–599.00 Hz	0.00
	01-30	Skip Frequency 2 (Upper Limit)	0.00–599.00 Hz	0.00
	01-31	Skip Frequency 2 (Lower Limit)	0.00–599.00 Hz	0.00
	01-32	Skip Frequency 3 (Upper Limit)	0.00–599.00 Hz	0.00
	01-33	Skip Frequency 3 (Lower Limit)	0.00–599.00 Hz	0.00
	01-34	Zero-Speed Mode	0: Output waiting 1: Zero-speed operation 2: Fmin (refer to Pr.01-07 and Pr.01-41)	0
	01-35	Rated / Base Frequency of Motor 2	0.00–599.00 Hz	60.00 / 50.00
	01-36	Rated / Base Voltage of Motor 2	115V / 230V models: 0.0–255.0 V 460V models: 0.0–510.0 V 575V models: 0.0–637.0 V	220.0 440.0 575.0
	01-37	Mid-Point Frequency 1 of Motor 2	0.00–599.00 Hz	3.00
✓	01-38	Mid-Point Voltage 1 of Motor 2	115V / 230V models: 0.0–240.0 V 460V models: 0.0–480.0 V 575V models: 0.0–600.0 V	11.0 22.0 40.0
	01-39	Mid-Point Frequency 2 of Motor 2	0.00–599.00 Hz	1.50

	Pr.	Explanation	Settings	Default
✓	01-40	Mid-Point Voltage 2 of Motor 2	115V / 230V models: 0.0–240.0 V 460V models:0.0–480.0 V 575V models: 0.0–600.0 V	5.0 10.0 26.1
	01-41	Minimum Output Frequency of Motor 2	0.00–599.00 Hz	0.50
✓	01-42	Minimum Output Voltage of Motor 2	115V / 230V models: 0.0–240.0 V 460V models: 0.0–480.0 V 575V models: 0.0–600.0 V	1.0 2.0 16.7
	01-43	V/F Curve Selection	0: V/F curve determined by Pr.01-00–Pr.01-08 1: V/F curve to the power of 1.5 2: V/F curve to the power of 2	0
✓	01-44	Auto-Acceleration and Auto-Deceleration Setting	0: Linear acceleration and deceleration 1: Auto-acceleration and linear deceleration 2: Linear acceleration and auto-deceleration 3: Auto-acceleration and auto-deceleration 4: Stall prevention by auto-acceleration and auto-deceleration (limited by Pr.01-12–Pr.01-21)	0
	01-45	Time Unit for Acceleration / Deceleration and S-Curve	0: Unit 0.01 sec. 1: Unit 0.1 sec.	0
✓	01-46	CANopen Quick Stop Time	Pr.01-45 = 0: 0.00–600.00 sec. Pr.01-45 = 1: 0.0–6000.0 sec.	1.00 1.0
	01-49	Regenerative Energy Restriction Control Method	0: Disable 1: Over voltage energy restriction 2: Traction energy control (TEC)	0
	01-52	Maximum Operation Frequency of Motor 2	0.00–599.00 Hz	60.00 / 50.00
	01-53	Maximum Operation Frequency of Motor 3	0.00–599.00 Hz	60.00 / 50.00
	01-54	Rated / Base Frequency of Motor 3	0.00–599.00 Hz	60.00 / 50.00
	01-55	Rated / Base Voltage of Motor 3	115V / 230V models: 0.0–255.0 V 460V models: 0.0–510.0 V 575V models: 0.0–637.0 V	220.0 440.0 575.0
	01-56	Mid-Point Frequency 1 of Motor 3	0.00–599.00 Hz	3.00
✓	01-57	Mid-Point Voltage 1 of Motor 3	115V / 230V models: 0.0–240.0 V 460V models: 0.0–480.0 V 575V models: 0.0–600.0 V	11.0 22.0 40.0
	01-58	Mid-Point Frequency 2 of Motor 3	0.00–599.00 Hz	1.50

	Pr.	Explanation	Settings	Default
✓	01-59	Mid-Point Voltage 2 of Motor 3	115V / 230V models: 0.0–240.0 V 460V models: 0.0–480.0 V 575V models: 0.0–600.0 V	5.0 10.0 26.1
	01-60	Minimum Output Frequency of Motor 3	0.00–599.00 Hz	0.50
✓	01-61	Minimum Output Voltage of Motor 3	115V / 230V models: 0.0–240.0 V 460V models: 0.0–480.0 V 575V models: 0.0–600.0 V	1.0 2.0 16.7
	01-62	Maximum Operation Frequency of Motor 4	0.00–599.00 Hz	60.00 / 50.00
	01-63	Rated / Base Frequency of Motor 4	0.00–599.00 Hz	60.00 / 50.00
	01-64	Rated / Base Voltage of Motor 4	115V / 230V models: 0.0–255.0 V 460V models: 0.0–510.0 V 575V models: 0.0–637.0 V	220.0 440.0 575.0
	01-65	Mid-Point Frequency 1 of Motor 4	0.00–599.00 Hz	3.00
✓	01-66	Mid-Point Voltage 1 of Motor 4	115V / 230V models: 0.0–240.0 V 460V models: 0.0–480.0 V 575V models: 0.0–600.0 V	11.0 22.0 40.0
	01-67	Mid-Point Frequency 2 of Motor 4	0.00–599.00 Hz	1.50
✓	01-68	Mid-Point Voltage 2 of Motor 4	115V / 230V models: 0.0–240.0 V 460V models: 0.0–480.0 V 575V models: 0.0–600.0 V	5.0 10.0 26.1
	01-69	Minimum Output Frequency of Motor 4	0.00–599.00 Hz	0.50
✓	01-70	Minimum Output Voltage of Motor 4	115V / 230V models: 0.0–240.0 V 460V models: 0.0–480.0 V 575V models: 0.0–600.0 V	1.0 2.0 16.7

02 Digital Input / Output Parameters

Pr.	Explanation	Settings	Default
02-00	Two-Wire / Three-Wire Operation Control	0: No function 1: Two-wire mode 1, power on for operation control (M1: FWD / STOP, M2: REV / STOP) 2: Two-wire mode 2, power on for operation control (M1: RUN / STOP, M2: REV / FWD) 3: Three-wire, power on for operation control (M1: RUN, M2: REV / FWD, M3: STOP) 4: Two-wire mode 1, Quick Start (M1: FWD / STOP, M2: REV / STOP) 5: Two-wire mode 2, Quick Start (M1: RUN / STOP, M2: REV / FWD) 6: Three-wire, Quick Start (M1: RUN, M2: REV / FWD, M3: STOP) **IMPORTANT** 1. In the fast start-up function, terminal output keeps in the ready status, and the drive responses to the command immediately. 2. When using Quick Start function, the output terminals UVW are with driving voltages in order to output and respond immediately if a Start command is given. Do not touch the terminals or modify the motor wiring to prevent electric shocks.	1
02-01	Multi-Function Input Command 1 (MI1)	0: No function 1: Multi-step speed command 1 2: Multi-step speed command 2 3: Multi-step speed command 3 4: Multi-step speed command 4 5: Reset 6: JOG operation [by external control or KPC-CC01 (optional)] 7: Acceleration / deceleration speed inhibit 8: 1st and 2nd acceleration / deceleration time selection 9: 3rd and 4th acceleration / deceleration time selection 10: External Fault (EF) Input (Pr.07-20) 11: Base Block (B.B.) input from external 12: Output stop	0
02-02	Multi-Function Input Command 2 (MI2)		0
02-03	Multi-Function Input Command 3 (MI3)		1
02-04	Multi-Function Input Command 4 (MI4)		2
02-05	Multi-Function Input Command 5 (MI5)		3
02-06	Multi-Function Input Command 6 (MI6)		4
02-07	Multi-Function Input Command 7 (MI7)		0

Pr.	Explanation	Settings	Default
		13: Cancel the setting of auto-acceleration / auto-deceleration time 15: Rotating speed command from AVI 16: Rotating speed command from ACI 18: Force to stop (Pr.07-20) 19: Digital up command 20: Digital down command 21: PID function disabled 22: Clear the counter 23: Input the counter value (MI6) 24: FWD JOG command 25: REV JOG command 26: TQC / FOC mode selection 27: ASR1 / ASR2 selection 28: Emergency stop (EF1) 29: Signal confirmation for Y-connection 30: Signal confirmation for Δ-connection 31: High torque bias (Pr.11-30) 32: Middle torque bias (Pr.11-31) 33: Low torque bias (Pr.11-32) 38: Disable writing EEPROM function 39: Torque command direction 40: Force coasting to stop 41: HAND switch 42: AUTO switch 48: Mechanical gear ratio switch 49: Enable drive 50: Slave dEb action to execute 51: Selection for PLC mode bit 0 52: Selection for PLC mode bit 1 53: Trigger CANopen quick stop 56: Local / Remote selection 58: Enable fire mode (with RUN command) 59: Enable fire mode (without RUN command) 70: Force auxiliary frequency return to 0 71: Disable PID function, force PID output return to 0	
		72: Disable PID function, retain the output value before disabled 73: Force PID integral gain return to 0, disable integral	

	Pr.	Explanation	Settings	Default
			74: Reverse PID feedback 81: Simple positioning zero-point position signal input 82: OOB loading balance detection 83: Multi-motor (IM) selection bit 0 84: Multi-motor (IM) selection bit 1	
✓	02-09	External Terminal UP / DOWN Key Mode	0: According to acceleration / deceleration time 1: With constant speed (Pr.02-10) 2: Pulse signal (Pr.02-10) 3: Curve 4: Steps (Pr.02-10)	0
✓	02-10	Acceleration / Deceleration Speed of External Terminal UP / DOWN Keys	0.001–1.000 Hz/ms	0.001
✓	02-11	Multi-Function Input Response Time	0.000–30.000 sec.	0.005
✓	02-12	Multi-Function Input Mode Selection	0–65535	0
✓	02-13	Multi-Function Output 1 (RY1)	0: No function 1: Indication during RUN 2: Operation speed reached 3: Desired frequency reached 1 (Pr.02-22) 4: Desired frequency reached 2 (Pr.02-24) 5: Zero speed (Frequency command) 6: Zero speed including STOP (Frequency command) 7: Over-torque 1 (Pr.06-06–06-08) 8: Over-torque 2 (Pr.06-09–06-11) 9: Drive is ready 10: Low voltage warning (Lv) (Pr.06-00) 11: Malfunction indication 13: Overheat warning (Pr.06-15) 14: Software brake signal indicator (Pr.07-00) 15: PID feedback error (Pr.08-13, Pr.08-14) 16: Slip error (oSL) 17: Count value reached, does not return to 0 (Pr.02-20) 18: Count value reached, return to 0 (Pr.02-19) 19: External interrupt B.B. input (Base Block) 20: Warning output 21: Over-voltage	11
✓	02-16	Multi-Function Output 2 (MO1)		0
✓	02-17	Multi-Function Output 3 (MO2)		0

	Pr.	Explanation	Settings	Default
			22: Over-current stall prevention 23: Over-voltage stall prevention 24: Operation mode 25: Forward command 26: Reverse command 29: Output when frequency ≥ Pr.02-34 30: Output when frequency < Pr.02-34 31: Y-connection for the motor coil 32: Δ-connection for the motor coil 33: Zero speed (actual output frequency) 34: Zero speed including STOP (actual output frequency) 35: Error output selection 1 (Pr.06-23) 36: Error output selection 2 (Pr.06-24) 37: Error output selection 3 (Pr.06-25) 38: Error output selection 4 (Pr.06-26) 40: Speed reached (including STOP) 42: Crane function 43: Motor speed detection 44: Low current output (use with Pr.06-71–06-73) 45: UVW output electromagnetic valve switch 46: Master dEb output 50: Output control for CANopen 51: Analog output control for RS-485 interface 52: Output control for communication cards 53: Fire mode indication 66: SO output logic A 67: Analog input level reached 68: SO output logic B 73: Over-torque 3 74: Over-torque 4 75: Forward RUN status 76: Reverse RUN status	
✓	02-18	Multi-Function Output Direction	0–65535	0
✓	02-19	Terminal Counting Value Reached (Returns To 0)	0–65500	0
✓	02-20	Preliminary Counting Value Reached (does not return to 0)	0–65500	0
✓	02-21	Digital Output Gain (DFM)	1–55	1
✓	02-22	Desired Frequency Reached 1	0.00–599.00 Hz	60.00 / 50.00

	Pr.	Explanation	Settings	Default
✓	02-23	The Width of the Desired Frequency Reached 1	0.00–599.00 Hz	2.00
✓	02-24	Desired Frequency Reached 2	0.00–599.00 Hz	60.00 / 50.00
✓	02-25	The Width of the Desired Frequency Reached 2	0.00–599.00 Hz	2.00
✓	02-34	Output Frequency Setting for Multi-Function Output Terminal	0.00–599.00 Hz	0.00
✓	02-35	External Operation Control Selection after Reset and Reboot	0: Disable 1: Drive runs if the RUN command remains after reset or reboot	0
✓	02-47	Motor Zero-Speed Level	0–65535 rpm	0
	02-50	Display the Status of Multi-Function Input Terminal	Monitor the status of multi-function input terminals	Read only
	02-51	Display the Status of Multi-Function Output Terminal	Monitor the status of multi-function output terminals	Read only
	02-52	Display the External Multi-Function Input Terminals Used by PLC	Monitor the status of PLC input terminals	Read only
	02-53	Display the External Multi-Function Output Terminals Used by PLC	Monitor the status of PLC output terminals	Read only
	02-54	Display the Frequency Command Executed by External Terminal	0.00–599.00 Hz (Read only)	Read only
✓	02-58	Multi-Function Output Terminal (Function 42): Brake Frequency Check Point	0.00–599.00 Hz	0.00
✓	02-74	Internal / External Multi-Function Input Terminal Selection	0000–FFFFh	0000h
✓	02-75	Internal Multi-Function Input Terminal Selection	0000–FFFFh	0000h
	02-78	Motor Deceleration Ratio	4.0–1000.0	200.0
	02-79	Automatic Positioning Angle Setting	0.0–6480.0	180.0
	02-80	Automatic Positioning Deceleration Time	0.00: Disable the function 0.01–100.00 sec.	0.00
✓	02-81	EF Activates when the Terminal Count Value Reached	0: Terminal count value reached, no EF displays (continues to operate) 1: Terminal count value reached, EF activates	0

	Pr.	Explanation	Settings	Default
✓	02-82	Initial Frequency Command (F) Mode after Stop	0: Use current Frequency command 1: Use zero Frequency Command 2: Refer to Pr.02-83 to set up	0
✓	02-83	Initial Frequency Command (F) Setting after Stop	0.00–599.00 Hz	60.00

03 Analog Input / Output Parameters

	Pr.	Explanation	Settings	Default
✓	03-00	Analog Input Selection (AVI)	0: No function 1: Frequency command 2: Torque command (torque limit under speed mode) 3: Torque compensation command 4: PID target value 5: PID feedback signal 6: Thermistor (PTC) input value 7: Positive torque limit 8: Negative torque limit 9: Regenerative torque limit 10: Positive / negative torque limit 11: PT100 thermistor input value 12: Auxiliary frequency input 13: PID compensation value	1
✓	03-01	Analog Input Selection (ACI)		0
✓	03-03	Analog Input Bias (AVI)	-100.0–100.0%	0
✓	03-04	Analog Input Bias (ACI)	-100.0–100.0%	0
✓	03-07	Positive / Negative Bias Mode (AVI)	0: No bias 1: Lower than or equal to bias 2: Greater than or equal to bias 3: The absolute value of the bias voltage while serving as the center 4: Bias serves as the center	0
✓	03-08	Positive / Negative Bias Mode (ACI)		
✓	03-10	Reverse Setting when Analog Signal Input is Negative Frequency	0: Negative frequency input is not allowed. The digital keypad or external terminal controls the forward and reverse direction. 1: Negative frequency input is allowed. Positive frequency = run in a forward direction; negative frequency = run in a reverse direction. The digital keypad or external terminal control cannot change the running direction.	0
✓	03-11	Analog Input Gain (AVI)	-500.0–500.0%	100.0
✓	03-12	Analog Input Gain (ACI)	-500.0–500.0%	100.0
✓	03-15	Analog Input Filter Time (AVI)	0.00–20.00 sec.	0.01
✓	03-16	Analog Input Filter Time (ACI)	0.00–20.00 sec.	0.01
✓	03-18	Analog Input Addition Function	0: Disable (AVI, ACI) 1: Enable (excludes analog extension card)	0
	03-19	Signal Loss Selection for Analog Input 4–20 mA	0: Disable 1: Continue operation at the last frequency 2: Decelerate to 0 Hz	0

	Pr.	Explanation	Settings	Default
			3: Stop immediately and display “ACE”	
✓	03-20	AFM Multi-Function Output	0: Output frequency (Hz) 1: Frequency command (Hz) 2: Motor speed (Hz) 3: Output current (rms) 4: Output voltage 5: DC bus voltage 6: Power factor 7: Power 8: Output torque 9: AVI 10: ACI 12: Iq current command 13: Iq feedback value 14: Id current command 15: Id feedback value 16: Vq-axis voltage command 17: Vd-axis voltage command 18: Torque command 19: PG2 frequency command 20: CANopen analog output 21: RS-485 analog output 22: Communication card analog output 23: Constant voltage output	0
✓	03-21	AFM Analog Output Gain	0.0–500.0%	100.0
✓	03-22	AFM Analog Output in REV Direction	0: Absolute value in output voltage 1: Reverse output 0 V; forward output 0–10 V 2: Reverse output 5–0 V; forward output 5–10 V	0
✓	03-27	AFM Output Bias	-100.00–100.00%	0.00
✓	03-28	AVI Terminal Input Selection	0: 0–10 V (Pr.03-63–Pr.03-68 is valid) 3: -10–10 V (Pr.03-69–Pr.03-74 are valid)	0
✓	03-29	ACI Terminal Input Selection	0: 4–20 mA 1: 0–10 V 2: 0–20 mA	0
	03-30	PLC Analog Output Terminal Status	Monitor the status of the PLC analog output terminals bit 0: AFM	Read only
✓	03-31	AFM Output Selection	0: 0–10 V output 1: 0–20 mA output 2: 4–20 mA output	0

	Pr.	Explanation	Settings	Default
✓	03-32	AFM DC Output Setting Level	0.00–100.00%	0.00
✓	03-35	AFM Output Filter Time	0.00–20.00 sec.	0.01
✓	03-39	VR Input Selection	0: Disable 1: Frequency command	1
✓	03-40	VR Input Bias	-100.0–100.0%	0.0
✓	03-41	VR Positive / Negative Bias	0: No bias 1: Lower than or equal to bias 2: Greater than or equal to bias 3: The absolute value of the bias voltage while serving as the center 4: Bias serves as the center	0
✓	03-42	VR Gain	-500.0–500.0%	100.0
✓	03-43	VR Filter Time	0.00–2.00 sec.	0.01
✓	03-44	Multi-Function Output (MO) by AI Level Source	0: AVI 1: ACI	0
✓	03-45	AI Upper Level	-100–100%	50
✓	03-46	AI Lower Level	-100–100%	10
✓	03-50	Analog Input Curve Selection	0: Normal curve 1: Three-point curve of AVI 2: Three-point curve of ACI 3: Three-point curve of AVI & ACI	0
✓	03-57	ACI Lowest Point	Pr.03-29 = 1, 0.00–10.00 V Pr.03-29 ≠ 1, 0.00–20.00 mA	4.00
✓	03-58	ACI Proportional Lowest Point	0.00–100.00%	0.00
✓	03-59	ACI Mid-Point	Pr.03-29 = 1, 0.00–10.00 V Pr.03-29 ≠ 1, 0.00–20.00 mA	12.00
✓	03-60	ACI Proportional Mid-Point	0.00–100.00%	50.00
✓	03-61	ACI Highest Point	Pr.03-29 = 1, 0.00–10.00 V Pr.03-29 ≠ 1, 0.00–20.00 mA	20.00
✓	03-62	ACI Proportional Highest Point	0.00–100.00%	100.00
✓	03-63	AVI Voltage Lowest Point	0.00–10.00 V	0.00
✓	03-64	AVI Proportional Lowest Point	-100.00–100.00%	0.00
✓	03-65	AVI Voltage Mid-Point	0.00–10.00 V	5.00
✓	03-66	AVI Proportional Mid-Point	-100.00–100.00%	50.00
✓	03-67	AVI Voltage Highest Point	0.00–10.00 V	10.00
✓	03-68	AVI Proportional Highest Point	-100.00–100.00%	100.00
✓	03-69	Negative AVI Voltage Lowest Point	-10.00–0.00 V (valid when Pr.03-28 sets as -10–10 V)	0.00
✓	03-70	Negative AVI Proportional Lowest Point	-100.00–100.00% (valid when Pr.03-28 sets as -10–10 V)	0.00

	Pr.	Explanation	Settings	Default
✓	03-71	Negative AVI Voltage Mid-Point	-10.00–0.00 V (valid when Pr.03-28 sets as -10–10 V)	-5.00
✓	03-72	Negative AVI Proportional Mid-Point	-100.00–100.00% (valid when Pr.03-28 sets as -10–10 V)	-50.00
✓	03-73	Negative AVI Voltage Highest Point	-10.00–0.00 V (valid when Pr.03-28 sets as -10–10 V)	-10.00
✓	03-74	Negative AVI Proportional Highest Point	-100.00–100.00% (valid when Pr.03-28 sets as -10–10 V)	-100.00

04 Multi-step Speed Parameters

	Pr.	Explanation	Settings	Default
✓	04-00	1st Step Speed Frequency	0.00–599.00 Hz	0.00
✓	04-01	2nd Step Speed Frequency	0.00–599.00 Hz	0.00
✓	04-02	3rd Step Speed Frequency	0.00–599.00 Hz	0.00
✓	04-03	4th Step Speed Frequency	0.00–599.00 Hz	0.00
✓	04-04	5th Step Speed Frequency	0.00–599.00 Hz	0.00
✓	04-05	6th Step Speed Frequency	0.00–599.00 Hz	0.00
✓	04-06	7th Step Speed Frequency	0.00–599.00 Hz	0.00
✓	04-07	8th Step Speed Frequency	0.00–599.00 Hz	0.00
✓	04-08	9th Step Speed Frequency	0.00–599.00 Hz	0.00
✓	04-09	10th Step Speed Frequency	0.00–599.00 Hz	0.00
✓	04-10	11th Step Speed Frequency	0.00–599.00 Hz	0.00
✓	04-11	12th Step Speed Frequency	0.00–599.00 Hz	0.00
✓	04-12	13th Step Speed Frequency	0.00–599.00 Hz	0.00
✓	04-13	14th Step Speed Frequency	0.00–599.00 Hz	0.00
✓	04-14	15th Step Speed Frequency	0.00–599.00 Hz	0.00
✓	04-50	PLC Buffer 0	0–65535	0
✓	04-51	PLC Buffer 1	0–65535	0
✓	04-52	PLC Buffer 2	0–65535	0
✓	04-53	PLC Buffer 3	0–65535	0
✓	04-54	PLC Buffer 4	0–65535	0
✓	04-55	PLC Buffer 5	0–65535	0
✓	04-56	PLC Buffer 6	0–65535	0
✓	04-57	PLC Buffer 7	0–65535	0
✓	04-58	PLC Buffer 8	0–65535	0
✓	04-59	PLC Buffer 9	0–65535	0
✓	04-60	PLC Buffer 10	0–65535	0
✓	04-61	PLC Buffer 11	0–65535	0
✓	04-62	PLC Buffer 12	0–65535	0
✓	04-63	PLC Buffer 13	0–65535	0
✓	04-64	PLC Buffer 14	0–65535	0
✓	04-65	PLC Buffer 15	0–65535	0
✓	04-66	PLC Buffer 16	0–65535	0
✓	04-67	PLC Buffer 17	0–65535	0
✓	04-68	PLC Buffer 18	0–65535	0
✓	04-69	PLC Buffer 19	0–65535	0

05 Motor Parameters

	Pr.	Explanation	Settings	Default
	05-00	Motor Parameter Auto-Tuning	0: No function 1: Dynamic test for induction motor (IM) 2: Static test for induction motor (IM) 5: Rolling auto-tuning for PM (IPM / SPM) 12: FOC sensorless inertia estimation 13: High frequency stall test for PM	0
	05-01	Full-Load Current for Induction Motor 1 (A)	10–120% of the drive's rated current	Depending on the model power
✓	05-02	Rated Power for Induction Motor 1 (kW)	0.00–655.35 kW	Depending on the model power
✓	05-03	Rated Speed for Induction Motor 1 (rpm)	0–xxxxx rpm (Depending on the motor's number of poles) 1710 (60 Hz, 4 poles); 1410 (50 Hz, 4 poles)	Depending on the motor's number of poles
	05-04	Number of Poles for Induction Motor 1	2–20	4
	05-05	No-Load Current for Induction Motor 1 (A)	0.00–Pr.05-01 default	Depending on the model power
	05-06	Stator Resistance (Rs) for Induction Motor 1	0.000–65.535 Ω	Depending on the model power
	05-07	Rotor Resistance (Rr) for Induction Motor 1	0.000–65.535 Ω	0.000
	05-08	Magnetizing Inductance (Lm) for Induction Motor 1	0.0–6553.5 mH	0.0
	05-09	Stator Inductance (Lx) for Induction Motor 1	0.0–6553.5 mH	0.0
	05-13	Full-Load Current for Induction Motor 2 (A)	10–120% of the drive's rated current	Depending on the model power
✓	05-14	Rated Power for Induction Motor 2 (kW)	0.00–655.35 kW	Depending on the model power
✓	05-15	Rated Speed for Induction Motor 2 (rpm)	0–xxxxx rpm (Depending on the motor's number of poles) 1710 (60 Hz, 4 poles); 1410 (50 Hz, 4 poles)	Depending on the motor's number of poles
	05-16	Number of Poles for Induction Motor 2	2–20	4
	05-17	No-Load Current for Induction Motor 2 (A)	0.00–Pr.05-13 default	Depending on the model power

	Pr.	Explanation	Settings	Default
	05-18	Stator Resistance (Rs) for Induction Motor 2	0.000–65.535 Ω	Depending on the model power
	05-19	Rotor Resistance (Rr) for Induction Motor 2	0.000–65.535 Ω	0.000
	05-20	Magnetizing Inductance (Lm) for Induction Motor 2	0.0–6553.5 mH	0.0
	05-21	Stator Inductance (Lx) for Induction Motor 2	0.0–6553.5 mH	0.0
	05-22	Multi-Motor (Induction) Selection	1: Motor 1 2: Motor 2 3: Motor 3 (VF or SVC control mode only) 4: Motor 4 (VF or SVC control mode only)	1
✓	05-23	Frequency for Y-Connection / △-Connection Switch for an Induction Motor	0.00–599.00 Hz	60.00
	05-24	Y-Connection / △-Connection Switch for an Induction Motor	0: Disable 1: Enable	0
✓	05-25	Delay Time for Y-Connection / △-Connection Switch for an Induction Motor	0.000–60.000 sec.	0.200
	05-26	Accumulated Watt-Second for a Motor in Low Word (W-Msec.)	Read only	0.0
	05-27	Accumulated Watt-Second for a Motor in High Word (W-Sec.)	Read only	0.0
	05-28	Accumulated Watt-Hour for a Motor (W-Hour)	Read only	0.0
	05-29	Accumulated Watt-Hour for a Motor in Low Word (kW-Hour)	Read only	0.0
	05-30	Accumulated Watt-Hour for a Motor in High Word (MW-Hour)	Read only	0.0
	05-31	Accumulated Motor Operation Time (Minutes)	0–1439	0
	05-32	Accumulated Motor Operation Time (Days)	0–65535	0
	05-33	Induction Motor (IM) or Permanent Magnet Synchronous AC Motor (PM) Selection	0: IM (Induction motor) 1: SPM (Surface permanent magnet synchronous AC motor) 2: IPM (Interior permanent magnet synchronous AC motor)	0

	Pr.	Explanation	Settings	Default
	05-34	Full-Load Current for a Permanent Magnet Synchronous AC Motor	0–120% of the drive's rated current	Depending on the model power
	05-35	Rated Power for a Permanent Magnet Synchronous AC Motor	0.00–655.35 kW	Depending on the motor power
	05-36	Rated Speed for a Permanent Magnet Synchronous AC Motor	0–65535 rpm	2000
	05-37	Number of Poles for a Permanent Magnet Synchronous AC Motor	0–65535	10
	05-39	Stator Resistance for a Permanent Magnet Synchronous AC Motor	0.000–65.535 Ω	0.000
	05-40	Permanent Magnet Synchronous AC Motor Ld	0.00–655.35 mH	0.00
	05-41	Permanent Magnet Synchronous AC Motor Lq	0.00–655.35 mH	0.00
	05-43	Ke Parameter of a Permanent Magnet Synchronous AC Motor	0–65535 (Unit: V / krpm)	0
	05-51	Motor Code	0–65535	0
	05-64	Full-Load Current for Induction Motor 3 (A)	10–120% of the drive's rated current	Depending on the model power
✓	05-65	Rated Power for Induction Motor 3 (kW)	0.00–655.35 kW	Depending on the model power
✓	05-66	Rated Speed for Induction Motor 3 (rpm)	0–xxxxx rpm (Depending on the motor's number of poles) 1710 (60 Hz, 4 poles); 1410 (50 Hz, 4 poles)	Depending on the motor's number of poles
	05-67	Number of Poles for Induction Motor 3	2–20	4
	05-68	No-Load Current for Induction Motor 3 (A)	0.00–Pr.05-64 default	Depending on the model power
	05-69	Stator Resistance (Rs) for Induction Motor 3	0.000–65.535 Ω	Depending on the model power
	05-70	Full-Load Current for Induction Motor 4 (A)	10–120% of the drive's rated current	Depending on the model power
✓	05-71	Rated Power for Induction Motor 4 (kW)	0.00–655.35 kW	Depending on the model power

Pr.	Explanation	Settings	Default
05-72	Rated Speed for Induction Motor 4 (rpm)	0–xxxxx rpm (Depending on the motor's number of poles) 1710 (60 Hz, 4 poles); 1410 (50 Hz, 4 poles)	Depending on the motor's number of poles
05-73	Number of Poles for Induction Motor 4	2–20	4
05-74	No-Load Current for Induction Motor 4 (A)	0.00–Pr.05-70 default	Depending on the model power
05-75	Stator Resistance (Rs) for Induction Motor 4	0.000–65.535 Ω	Depending on the model power

06 Protection Parameters (1)

	Pr.	Explanation	Settings	Default
✓	06-00	Low Voltage Level	115V / 230V models: 150.0–220.0 V_{DC} 460V models: 300.0–440.0 V_{DC} 575V models: 375.0–550.0 V_{DC}	180.0 360.0 450.0
✓	06-01	Over-Voltage Stall Prevention	0: Disable 115V / 230V models: 0.0–390.0 V_{DC} 460V models: 0.0–780.0 V_{DC} 575V models: 0.0–1000.0 V_{DC}	 380.0 760.0 975.0
✓	06-02	Selection for Over-Voltage Stall Prevention	0: Traditional over-voltage stall prevention 1: Smart over-voltage stall prevention	0
✓	06-03	Over-Current Stall Prevention during Acceleration	Normal load: 0–150% (100% corresponds to the rated current of the drive) Heavy load: 0–200% (100% corresponds to the rated current of the drive)	120 180
✓	06-04	Over-Current Stall Prevention during Operation	Normal load: 0–150% (100% corresponds to the rated current of the drive) Heavy load: 0–200% (100% corresponds to the rated current of the drive)	120 180
✓	06-05	Acceleration / Deceleration Time Selection for Stall Prevention at Constant Speed	0: By current acceleration / deceleration time 1: By the first acceleration / deceleration time 2: By the second acceleration / deceleration time 3: By the third acceleration / deceleration time 4: By the fourth acceleration / deceleration time 5: By Auto-acceleration / auto-deceleration	0
✓	06-06	Over-Torque Detection Selection (Motor 1)	0: No function 1: Continue operation after over-torque detection during constant speed operation 2: Stop after over-torque detection during constant speed operation 3: Continue operation after over-torque detection during RUN 4: Stop after over-torque detection during RUN	0
✓	06-07	Over-Torque Detection Level (Motor 1)	10–250% (100% corresponds to the rated current of the drive)	120
✓	06-08	Over-Torque Detection Time (Motor 1)	0.1–60.0 sec.	0.1

	Pr.	Explanation	Settings	Default
✓	06-09	Over-Torque Detection Selection (Motor 2)	0: No function 1: Continue operation after over-torque detection during constant speed operation 2: Stop after over-torque detection during constant speed operation 3: Continue operation after over-torque detection during RUN 4: Stop after over-torque detection during RUN	0
✓	06-10	Over-Torque Detection Level (Motor 2)	10–250% (100% corresponds to the rated current of the drive)	120
✓	06-11	Over-Torque Detection Time (Motor 2)	0.1–60.0 sec.	0.1
✓	06-12	Current Limit	0–250% (100% corresponds to the rated current of the drive)	150
✓	06-13	Electronic Thermal Relay Selection 1 (Motor 1)	0: Inverter motor (with external forced cooling) 1: Standard motor (motor with fan on the shaft) 2: Disabled	2
✓	06-14	Electronic Thermal Relay Action Time 1 (Motor 1)	30.0–600.0 sec.	60.0
✓	06-15	Temperature Level Overheat (OH) Warning	0.0–110.0°C	Depending on the model power
✓	06-16	Stall Prevention Limit Level (Weak Magnetic Field Current Stall Prevention Level)	0–100% (refer to Pr.06-03–Pr.06-04)	100
	06-17	Fault Record 1	0: No fault record 1: Over-current during acceleration (ocA) 2: Over-current during deceleration (ocd) 3: Over-current during steady operation (ocn) 4: Ground fault (GFF) 6: Over-current at stop (ocS) 7: Over-voltage during acceleration (ovA) 8: Over-voltage during deceleration (ovd) 9: Over-voltage during constant speed (ovn) 10: Over-voltage at stop (ovS) 11: Low-voltage during acceleration (LvA) 12: Low-voltage during deceleration (Lvd) 13: Low-voltage during constant speed (Lvn) 14: Low-voltage at stop (LvS) 15: Phase loss protection (orP) 16: IGBT overheating (oH1)	0
	06-18	Fault Record 2		0
	06-19	Fault Record 3		0
	06-20	Fault Record 4		0
	06-21	Fault Record 5		0
	06-22	Fault Record 6		0
		Fault Record 7 (Pr.14-70)		0
		Fault Record 8 (Pr.14-71)		0
		Fault Record 9 (Pr.14-72)		0
		Fault Record 10 (Pr.14-73)		0

Pr.	Explanation	Settings	Default
		18: IGBT temperature detection failure (tH1o) 21: Over load (oL) 22: Electronic thermal relay 1 protection (EoL1) 23: Electronic thermal relay 2 protection (EoL2) 24: Motor overheating PTC/ PT100 (oH3) 26: Over torque 1 (ot1) 27: Over torque 2 (ot2) 28: Under current (uC) 31: EEPROM read error (cF2) 33: U-phase error (cd1) 34: V-phase error (cd2) 35: W-phase error (cd3) 36: cc (current clamp) hardware error (Hd0) 37: oc (over-current) hardware error (Hd1) 40: Auto-tuning error (AUE) 41: PID loss ACI (AFE) 43: PG feedback loss (PGF2) 44: PG feedback stall (PGF3) 45: PG slip error (PGF4) 48: ACI loss (ACE) 49: External fault (EF) 50: Emergency stop (EF1) 51: External Base Block (bb) 52: Password is locked (Pcod) 54: Illegal command (CE1) 55: Illegal data address (CE2) 56: Illegal data value (CE3) 57: Data is written to read-only address (CE4) 58: Modbus transmission time-out (CE10) 61: Y-connection / △-connection switch error (ydc) 62: Deceleration energy backup error (dEb) 63: Over slip error (oSL) 72: STO Loss (STL1) 76: STO (STo) 77: STO Loss 2 (STL2) 78: STO Loss 3 (STL3) 79: U-phase Over-current before run (Aoc) 80: V-phase Over-current before run (boc) 81: W-phase Over-current before run (coc) 82: Output phase loss U phase (oPL1)	

	Pr.	Explanation	Settings	Default
			83: Output phase loss V phase (oPL2) 84: Output phase loss W phase (oPL3) 87: Low frequency overload protection (oL3) 89: Rotor position detection error (roPd) 101: CANopen guarding error (CGdE) 102: CANopen heartbeat error (CHbE) 104: CANopen bus off error (CbFE) 105: CANopen index error (CidE) 106: CANopen station address error (CAdE) 107: CANopen index setting exceed limit (CFrE) 121: Internal communication error (CP20) 123: Internal communication error (CP22) 124: Internal communication error (CP30) 126: Internal communication error (CP32) 127: Internal communication error (CP33) 128: Over-torque 3 (ot3) 129: Over-torque 4 (ot4) 134: Internal communication error (EoL3) 135: Internal communication error (EoL4) 140: oc hardware error (Hd6) 141: GFF occurs before run (b4GFF) 142: Auto-tune error 1 (AuE1) 143: Auto-tune error 2 (AuE2) 144: Auto-tune error 3 (AuE3) 149: Auto-tune error 5 (AuE5)	
✓	06-23	Fault Output Option 1	0–65535 (refer to bit table for fault code)	0
✓	06-24	Fault Output Option 2	0–65535 (refer to bit table for fault code)	0
✓	06-25	Fault Output Option 3	0–65535 (refer to bit table for fault code)	0
✓	06-26	Fault Output Option 4	0–65535 (refer to bit table for fault code)	0
✓	06-27	Electronic Thermal Relay Selection 2 (Motor 2)	0: Inverter motor (with external forced cooling) 1: Standard motor (motor with fan on the shaft) 2: Disabled	2
✓	06-28	Electronic Thermal Relay Action Time 2 (Motor 2)	30.0–600.0 sec.	60.0
✓	06-29	PTC Detection Selection	0: Warn and continue operation 1: Fault and ramp to stop 2: Fault and coast to stop 3: No warning	0
✓	06-30	PTC Level	0.0–100.0%	50.0

	Pr.	Explanation	Settings	Default
	06-31	Frequency Command at Malfunction	0.00–599.00 Hz	Read only
	06-32	Output Frequency at Malfunction	0.00–599.00 Hz	Read only
	06-33	Output Voltage at Malfunction	0.0–6553.5 V	Read only
	06-34	DC bus Voltage at Malfunction	0.0–6553.5 V	Read only
	06-35	Output Current at Malfunction	0.00–655.35 Amp	Read only
	06-36	IGBT Temperature at Malfunction	-3276.7–3276.7°C	Read only
	06-38	Motor Speed at Malfunction	-32767–32767 rpm	Read only
	06-39	Torque Command at Malfunction	-32767–32767%	Read only
	06-40	Status of the Multi-Function Input Terminal at Malfunction	0000h–FFFFh	Read only
	06-41	Status of the Multi-Function Output Terminal at Malfunction	0000h–FFFFh	Read only
	06-42	Drive Status at Malfunction	0000h–FFFFh	Read only
✓	06-44	STO Latch Selection	0: STO latch 1: STO no latch	0
✓	06-45	Output Phase Loss Detection Action (OPHL)	0: Warn and continue operation 1: Fault and ramp to stop 2: Fault and coast to stop 3: No warning	3
✓	06-46	Detection Time for Output Phase Loss	0.000–65.535 sec.	0.500
✓	06-47	Current Detection Level for Output Phase Loss	0.00–100.00%	1.00
✓	06-48	DC Brake Time for Output Phase Loss	0.000–65.535 sec.	0.000
	06-49	Lvx Auto-Reset	0: Disable 1: Enable	0
✓	06-53	Input Phase Loss Detection Action (Orp)	0: Fault and ramp to stop 1: Fault and coast to stop	0
✓	06-55	Derating Protection	0: Constant rated current and limit carrier frequency by load current and temperature 1: Constant carrier frequency and limit load current by setting carrier frequency 2: Constant rated current (same as setting 0), but close current limit	0
✓	06-56	PT100 Voltage Level 1	0.000–10.000 V	5.000
✓	06-57	PT100 Voltage Level 2	0.000–10.000 V	7.000
✓	06-58	PT100 Level 1 Frequency Protection	0.00–599.00 Hz	0.00

	Pr.	Explanation	Settings	Default
✓	06-59	PT100 Activation Level 1 Protection Frequency Delay Time	0–6000 sec.	60
✓	06-60	Software Detection GFF Current Level	0.0–6553.5%	60.0
✓	06-61	Software Detection GFF Filter Time	0.00–655.35 sec.	0.10
	06-63	Operation Time of Fault Record 1 (Days)	0–65535 days	Read only
	06-64	Operation Time of Fault Record 1 (Minutes)	0–1439 min.	Read only
	06-65	Operation Time of Fault Record 2 (Days)	0–65535 days	Read only
	06-66	Operation Time of Fault Record 2 (Minutes)	0–1439 min.	Read only
	06-67	Operation Time of Fault Record 3 (Days)	0–65535 days	Read only
	06-68	Operation Time of Fault Record 3 (Minutes)	0–1439 min.	Read only
	06-69	Operation Time of Fault Record 4 (Days)	0–65535 days	Read only
	06-70	Operation Time of Fault Record 4 (Minutes)	0–1439 min.	Read only
✓	06-71	Low Current Setting Level	0.0–100.0%	0.0
✓	06-72	Low Current Detection Time	0.00–360.00 sec.	0.00
✓	06-73	Low Current Action	0: No function 1: Fault and coast to stop 2: Fault and ramp to stop by the second deceleration time 3: Warn and continue operation	0
	06-80	Fire Mode	0: Disable 1: Forward (counterclockwise) operation 2: Reverse (clockwise) operation	0
✓	06-81	Operating Frequency in Fire Mode	0.00–599.00 Hz	60.00
	06-88	Operation Times in Fire Mode	0–65535 times	Read only
	06-90	Operation Time of Fault Record 5 (Days)	0–65535 days	Read only
	06-91	Operation Time of Fault Record 5 (Minutes)	0–1439 min.	Read only

Pr.	Explanation	Settings	Default
06-92	Operation Time of Fault Record 6 (Days)	0–65535 days	Read only
06-93	Operation Time of Fault Record 6 (Minutes)	0–1439 min.	Read only

07 Special Parameters

	Pr.	Explanation	Settings	Default
✓	07-00	Software Brake Chopper Action Level	115V / 230V models: 350.0–450.0 V_{DC} 460V models: 700.0–900.0 V_{DC} 575V models: 875.0–1000.0 V_{DC}	370.0 740.0 950.0
✓	07-01	DC Brake Current Level	0–100%	0
✓	07-02	DC Brake Time at Start-Up	0.0–60.0 sec.	0.0
✓	07-03	DC Brake Time at STOP	0.0–60.0 sec.	0.0
✓	07-04	DC Brake Frequency at STOP	0.00–599.00 Hz	0.00
✓	07-05	Voltage Increasing Gain	1–200%	100
✓	07-06	Restart after Momentary Power Loss	0: Stop operation 1: Speed tracking by the speed before the power loss 2: Speed tracking by the minimum output frequency	0
✓	07-07	Allowed Power Loss Duration	0.0–20.0 sec.	2.0
✓	07-08	Base Block Time	0.0–60.0 sec.	0.5
✓	07-09	Current Limit of Speed Tracking	20–200%	100
✓	07-10	Restart after Fault Action	0: Stop operation 1: Speed tracking by current speed 2: Speed tracking by minimum output frequency	0
✓	07-11	Number of Times of Restart after Fault	0–10	0
✓	07-12	Speed Tracking during Start-Up	0: Disable 1: Speed tracking by the maximum output frequency 2: Speed tracking by the motor frequency at start-up 3: Speed tracking by the minimum output frequency	0
✓	07-13	Deb Function Selection	0: Disable 1: dEb with auto-acceleration / auto-deceleration, the drive does not output the frequency after the power is restored. 2: dEb with auto-acceleration / auto-deceleration, the drive outputs the frequency after the power is restored. 3: dEb low-voltage control, then the drive's voltage increases to 350 V_{DC} / 700 V_{DC} and ramps to stop after low frequency 4: dEb high-voltage control of 350 V_{DC} / 700 V_{DC}, and the drive ramps to stop	0
✓	07-15	Dwell Time at Acceleration	0.00–600.00 sec.	0.00
✓	07-16	Dwell Frequency at Acceleration	0.00–599.00 Hz	0.00

	Pr.	Explanation	Settings	Default
✓	07-17	Dwell Time at Deceleration	0.00–600.00 sec.	0.00
✓	07-18	Dwell Frequency at Deceleration	0.00–599.00 Hz	0.00
✓	07-19	Fan Cooling Control	0: Fan is always ON 1: Fan is OFF after the AC motor drive stops for one minute. 2: Fan is ON when the AC motor drive runs, fan is OFF when the AC motor drive stops. 3: Fan turns ON when temperature (IGBT) reaches around 60ºC.	3
✓	07-20	Emergency Stop (EF) & Force to Stop Selection	0: Coast to stop 1: Stop by the first deceleration time 2: Stop by the second deceleration time 3: Stop by the third deceleration time 4: Stop by the fourth deceleration time 5: System deceleration 6: Automatic deceleration	0
✓	07-21	Automatic Energy-Saving Setting	0: Disable 1: Power factor energy-saving improvement	0
✓	07-23	Automatic Voltage Regulation (AVR) Function	0: Enable AVR 1: Disable AVR 2: Disable AVR during deceleration	0
✓	07-24	Torque Command Filter Time	0.001–10.000 sec.	0.050
✓	07-25	Slip Compensation Filter Time	0.001–10.000 sec.	0.100
✓	07-26	Torque Compensation Gain	IM: 0–10 (when Pr.05-33 = 0) PM: 0–5000 (when Pr.05-33 = 1 or 2)	1
✓	07-27	Slip Compensation Gain	0.00–10.00	0.00 (Default value is 1.00 in SVC mode)
✓	07-29	Slip Deviation Level	0.0–100.0% 0: No detection	0
✓	07-30	Over-Slip Deviation Detection Time	0.0–10.0 sec.	1.0
✓	07-31	Over-Slip Deviation Treatment	0: Warn and continue operation 1: Fault and ramp to stop 2: Fault and coast to stop 3: No warning	0
✓	07-32	Motor Oscillation Compensation Factor	0–10000	1000
✓	07-33	Auto-Restart Interval of Fault	0.0–6000.0 sec.	60.0
	07-38	PMSVC Voltage Feed Forward Gain	0.50–5.00	1.00

	Pr.	Explanation	Settings	Default
	07-46	OOB Sampling Time	0.1–120.0 sec.	1.0
	07-47	Number of OOB Sampling Times	00–32	20
	07-48	OOB Average Sampling Angle	Read only	Read only
✓	07-62	Deb Gain (Kp)	0–65535	8000
✓	07-63	Deb Gain (Ki)	0–65535	150
✓	07-71	Torque Compensation Gain (Motor 2)	IM: 0–10 (when Pr.05-33 = 0) PM: 0–5000 (when Pr.05-33 = 1 or 2)	1
✓	07-72	Slip Compensation Gain (Motor 2)	0.00–10.00	0.00 (Default value is 1.00 in SVC mode)
✓	07-73	Torque Compensation Gain (Motor 3)	IM: 0–10 (when Pr.05-33 = 0) PM: 0–5000 (when Pr.05-33 = 1 or 2)	1
✓	07-74	Slip Compensation Gain (Motor 3)	0.00–10.00	0.00 (Default value is 1.00 in SVC mode)
✓	07-75	Torque Compensation Gain (Motor 4)	IM: 0–10 (when Pr.05-33 = 0) PM: 0–5000 (when Pr.05-33 = 1 or 2)	1
✓	07-76	Slip Compensation Gain (Motor 4)	0.00–10.00	0.00 (Default value is 1.00 in SVC mode)

08 High-function PID Parameters

	Pr.	Explanation	Settings	Default
✓	08-00	Terminal Selection of PID Feedback	0: No function 1: Negative PID feedback: by analog input (Pr.03-00, Pr.03-01) 2: Negative PID feedback: by single-phase input (MI7), without direction (Pr.10-16 = 5) 4: Positive PID feedback: by analog input (Pr.03-00, Pr.03-01) 5: Positive PID feedback: by single-phase input (MI7), without direction (Pr.10-16 = 5) 7: Negative PID feedback: by communication protocols 8: Positive PID feedback: by communication protocols	0
✓	08-01	Proportional Gain (P)	0.0–1000.0 (When Pr.08-23 bit 1 = 0) 0.00–100.00 (When Pr.08-23 bit 1 = 1)	1.00
✓	08-02	Integral Time (I)	0.00–100.00 sec.	1.00
✓	08-03	Differential Time (D)	0.00–1.00 sec.	0.00
✓	08-04	Upper Limit of Integral Control	0.0–100.0%	100.0
✓	08-05	PID Output Command Limit (Positive Limit)	0.0–110.0%	100.0
✓	08-06	PID Feedback Value by Communication Protocol	-200.00–200.00%	0.00
✓	08-07	PID Delay Time	0.0–2.5 sec.	0.0
✓	08-08	Feedback Signal Detection Time	0.0–3600.0 sec.	0.0
✓	08-09	Feedback Signal Fault Treatment	0: Warn and continue operation 1: Fault and ramp to stop 2: Fault and coast to stop 3: Warn and operate at last frequency	0
✓	08-10	Sleep Level	0.00–599.00 Hz / 0.00–200.00%	0.00
✓	08-11	Wake-Up Level	0.00–599.00 Hz / 0.00–200.00%	0.00
✓	08-12	Sleep Delay Time	0.0–6000.0 sec.	0.0
✓	08-13	PID Feedback Signal Error Deviation Level	1.0–50.0%	10.0
✓	08-14	PID Feedback Signal Error Deviation Detection Time	0.1–300.0 sec.	5.0
✓	08-15	PID Feedback Signal Filter Time	0.1–300.0 sec.	5.0
✓	08-16	PID Compensation Selection	0: Parameter setting 1: Analog input	0

	Pr.	Explanation	Settings	Default
✓	08-17	PID Compensation	-100.0–100.0%	0
	08-18	Sleep Mode Function Setting	0: Refer to PID output command 1: Refer to PID feedback signal	0
✓	08-19	Wake-Up Integral Limit	0.0–200.0%	50.0
	08-20	PID Mode Selection	0: Serial connection 1: Parallel connection	0
	08-21	Enable PID to Change the Operation Direction	0: Operation direction cannot be changed 1: Operation direction can be changed	0
✓	08-22	Wake-Up Delay Time	0.00–600.00 sec.	0.00
✓	08-23	PID Control Flag	bit 0 = 1: PID running in reverse follows the setting for Pr.00-23. bit 0 = 0: PID running in reverse refers to PID's calculated value. bit 1 = 1: two decimal places for PID Kp bit 1 = 0: one decimal place for PID Kp	2
✓	08-26	PID Output Command Limit (Reverse Limit)	0.0–100.0%	100.0
✓	08-27	Acceleration / Deceleration Time for PID Command	0.00–655.35 sec.	0.00
✓	08-29	Frequency Base Corresponding to 100.00% PID	0: PID control output 100.00% corresponding to maximum operation frequency (Pr.01-00) 1: PID control output 100.00% corresponding to the input value of the auxiliary frequency	0
✓	08-31	Proportional Gain 2	0.0–1000.0 (when Pr.08-23 setting bit1 = 0) 0.00–100.00 (when Pr.08-23 setting bit1 = 1)	1.00
✓	08-32	Integral Time 2	0.00–100.00 sec.	1.00
✓	08-33	Differential Time 2	0.00–1.00 sec.	0.00
✓	08-65	PID Target Value Source	0: Frequency command (Pr.00-20, Pr.00-30) 1: Pr.08-66 setting 2: RS-485 communication input 3: External analog input (refer to Pr.03-00, Pr.03-01) 4: CANopen communication card 6: Communication card (does not include CANopen card) 7: Digital keypad potentiometer knob	0
✓	08-66	PID Target Value Setting	-100.00–100.00%	50.00
✓	08-67	Master and Auxiliary Reverse Running Cutoff Frequency	0.0–100.0%	10.0
✓	08-68	PID Deviation Limit	0.00–100.00%	0.00
✓	08-69	Integral Separation Level	0.00–100.00%	0.00

	Pr.	Explanation	Settings	Default
	08-70	Smart Start-Up Level	0.00–100.00%	5.00
✓	08-71	Smart Start-Up Frequency Command	0.00–599.00 Hz	0.00
✓	08-72	Smart Start-Up Acceleration Time	0.00–600.00 sec.	3.00
✓	08-75	PID2 Parameter Switch Condition	0: No switching (refer to Pr.08-01–Pr.08-03) 1: Auto-switch based on the output frequency 2: Auto-switch based on the deviation	0
✓	08-76	PID2 Parameter Switch Deviation 1	0.00–Pr.08-77%	10.00
✓	08-77	PID2 Parameter Switch Deviation 2	Pr.08-76–100.00%	40.00
✓	08-78	Allowed Reverse Running Time after Start-Up	0.0–6553.5 sec.	0.0

09 Communication Parameters

	Pr.	Explanation	Settings	Default
✓	09-00	Modbus Communication Address	1–254	1
✓	09-01	Modbus Transmission Speed	4.8–115.2 Kbps	9.6
✓	09-02	Modbus Transmission Fault Treatment	0: Warn and continue operation 1: Fault and ramp to stop 2: Fault and coast to stop 3: No warning, no fault, and continue operation	3
✓	09-03	Modbus Time-Out Detection	0.0–100.0 sec.	0.0
✓	09-04	Modbus Communication Protocol	1: 7, N, 2 (ASCII) 2: 7, E, 1 (ASCII) 3: 7, O, 1 (ASCII) 4: 7, E, 2 (ASCII) 5: 7, O, 2 (ASCII) 6: 8, N, 1 (ASCII) 7: 8, N, 2 (ASCII) 8: 8, E, 1 (ASCII) 9: 8, O, 1 (ASCII) 10: 8, E, 2 (ASCII) 11: 8, O, 2 (ASCII) 12: 8, N, 1 (RTU) 13: 8, N, 2 (RTU) 14: 8, E, 1 (RTU) 15: 8, O, 1 (RTU) 16: 8, E, 2 (RTU) 17: 8, O, 2 (RTU)	1
✓	09-09	Communication Response Delay Time	0.0–200.0 ms	2.0
	09-10	Communication Main Frequency	0.00–599.00 Hz	60.00
✓	09-11	Block Transfer 1	0–65535	0
✓	09-12	Block Transfer 2	0–65535	0
✓	09-13	Block Transfer 3	0–65535	0
✓	09-14	Block Transfer 4	0–65535	0
✓	09-15	Block Transfer 5	0–65535	0
✓	09-16	Block Transfer 6	0–65535	0
✓	09-17	Block Transfer 7	0–65535	0
✓	09-18	Block Transfer 8	0–65535	0
✓	09-19	Block Transfer 9	0–65535	0
✓	09-20	Block Transfer 10	0–65535	0
✓	09-21	Block Transfer 11	0–65535	0

	Pr.	Explanation	Settings	Default
✓	09-22	Block Transfer 12	0–65535	0
✓	09-23	Block Transfer 13	0–65535	0
✓	09-24	Block Transfer 14	0–65535	0
✓	09-25	Block Transfer 15	0–65535	0
✓	09-26	Block Transfer 16	0–65535	0
	09-30	Communication Decoding Method	0: Decoding method 1 1: Decoding method 2	1
✓	09-33	PLC Command Force to 0	0–65535	0
	09-35	PLC Address	1–254	2
	09-36	CANopen Slave Address	0: Disable 1–127	0
	09-37	CANopen Speed	0: 1 Mbps 1: 500 Kbps 2: 250 Kbps 3: 125 Kbps 4: 100 Kbps (Delta only) 5: 50 Kbps	0
	09-39	CANopen Warning Record	bit 0: CANopen software disconnection 1 (CANopen guarding time-out) bit 1: CANopen software disconnection 2 (CANopen heartbeat time-out) bit 3: CANopen SDO time-out bit 4: CANopen SDO buffer overflow bit 5: CANopen hardware disconnection warning (CANopen bus off) bit 6: CANopen format error warning (Error protocol for CANopen)	0
	09-40	CANopen Decoding Method	0: Use Delta-defined decoding method 1: Use CANopen standard DS402 protocol	1
	09-41	CANopen Communication Status	0: Node reset state 1: Com reset state 2: Boot up state 3: Pre-operation state 4: Operation state 5: Stop state	Read only
	09-42	CANopen Control Status	0: Not ready for use state 1: Inhibit start state 2: Ready to switch on state 3: Switched on state 4: Enable operation state	Read only

	Pr.	Explanation	Settings	Default
			7: Quick stop active state 13: Error reaction activation state 14: Error state	
	09-43	CANopen Reset Index	bit 0: CANopen reset, the internal address 20XX is 0 bit 1: CANopen reset, the internal address 264X is 0 bit 2: CANopen reset, the internal address 26AX is 0 bit 3: CANopen reset, the internal address 60XX is 0	65535
	09-60	Communication Card Identification	0: No communication card 1: DeviceNet slave 2: PROFIBUS-DP slave 3: CANopen slave 5: EtherNet/IP slave 6: EtherCAT 10: Backup power supply 12: PROFINET	Read only
	09-61	Firmware Version of Communication Card	Read only	Read only
	09-62	Product Code	Read only	Read only
	09-63	Error Code	Read only	Read only
✓	09-70	Communication Card Address (For DeviceNet or PROFIBUS)	DeviceNet: 0–63 PROFIBUS-DP: 1–125	1
✓	09-71	Communication Card Speed Setting (for DeviceNet)	Standard DeviceNet: 0: 125 Kbps 1: 250 Kbps 2: 500 Kbps 3: 1 Mbps (Delta only) Non-standard DeviceNet (Delta only): 0: 10 Kbps 1: 20 Kbps 2: 50 Kbps 3: 100 Kbps 4: 125 Kbps 5: 250 Kbps 6: 500 Kbps 7: 800 Kbps 8: 1 Mbps	2
✓	09-72	Additional Settings for Communication Card Speed (for DeviceNet)	0: Disable In this mode, the baud rate can only be 125 Kbps, 250 Kbps, 500 Kbps, or 1 Mbps in standard DeviceNet speed.	0

	Pr.	Explanation	Settings	Default
			1: Enable In this mode, DeviceNet baud rate can be same as that for CANopen (0–8).	
✓	09-75	Communication Card IP Configuration (for EtherNet)	0: Static IP 1: Dynamic IP (DHCP)	0
✓	09-76	Communication Card IP Address 1 (for EtherNet)	0–255	0
✓	09-77	Communication Card IP Address 2 (for EtherNet)	0–255	0
✓	09-78	Communication Card IP Address 3 (for EtherNet)	0–255	0
✓	09-79	Communication Card IP Address 4 (for EtherNet)	0–255	0
✓	09-80	Communication Card Address Mask 1 (for EtherNet)	0–255	0
✓	09-81	Communication Card Address Mask 2 (for EtherNet)	0–255	0
✓	09-82	Communication Card Address Mask 3 (for EtherNet)	0–255	0
✓	09-83	Communication Card Address Mask 4 (for EtherNet)	0–255	0
✓	09-84	Communication Card Gateway Address 1 (for EtherNet)	0–255	0
✓	09-85	Communication Card Gateway Address 2 (for EtherNet)	0–255	0
✓	09-86	Communication Card Gateway Address 3 (for EtherNet)	0–255	0
✓	09-87	Communication Card Gateway Address 4 (for EtherNet)	0–255	0
✓	09-88	Communication Card Password (Low Word) (for EtherNet)	0–99	0
✓	09-89	Communication Card Password (High Word) (for EtherNet)	0–99	0
✓	09-90	Reset Communication Card (for EtherNet)	0: Disable 1: Reset to defaults	0
✓	09-91	Additional Settings for the Communication Card (for EtherNet)	bit 0: Enable IP filter bit 1: Enable internet parameters (1 bit) When the IP address is set, this bit is enabled. After updating the parameters for the communication card, this bit changes to disabled.	0

Pr.	Explanation	Settings	Default
		bit 2: Enable login password (1 bit) When you enter the login password, this bit is enabled. After updating the communication card parameters, this bit changes to disabled.	
09-92	Communication Card Status (for EtherNet)	bit 0: Enable password When the communication card is set with a password, this bit is enabled. When the password is cleared, this bit is disabled.	0

10 Speed Feedback Control Parameters

	Pr.	Explanation	Settings	Default
	10-00	MI7 One-Phase Pulse Input Type Selection	0: Disabled 5: Pulse input (MI7)	0
	10-01	MI7 One-Phase Pulse Input Pulses per Revolution	1–20000	600
	10-02	MI7 One-Phase Pulse Input Type Setting	0: Disable 5: Single-phase input (MI7)	0
✓	10-04	Electrical Gear at Load Side A1	1–65535	100
✓	10-05	Electrical Gear at Motor Side B1	1–65535	100
✓	10-06	Electrical Gear at Load Side A2	1–65535	100
✓	10-07	Electrical Gear at Motor Side B2	1–65535	100
✓	10-10	MI7 One-Phase Pulse Input Stall Level	0: No function 0–120%	115
✓	10-11	Detection Time of MI7 One-Phase Pulse Input Stall	0.0–2.0 sec.	0.1
✓	10-12	MI7 One-Phase Pulse Input Stall Action	0: Warn and continue operation 1: Fault and ramp to stop 2: Fault and coast to stop	2
✓	10-13	MI7 One-Phase Pulse Input Slip Range	0: Disable 0–50%	50
✓	10-14	Detection Time of MI7 One-Phase Pulse Input Slip	0.0–10.0 sec.	0.5
✓	10-15	MI7 One-Phase Pulse Input Stall and Slip Error Action	0: Warn and continue operation 1: Fault and ramp to stop 2: Fault and coast to stop	2
✓	10-16	Pulse Input Type Setting	0: Disabled 5: Single-phase input (MI7)	0
✓	10-17	Electrical Gear A	1–65535	100
✓	10-18	Electrical Gear B	1–65535	100
✓	10-21	Pulse Input Speed Command Low Pass Filter Time	0.000–65.535 sec.	0.100
✓	10-24	FOC & TQC Function Control	0–65535	0
✓	10-25	FOC Bandwidth for Speed Observer	20.0–100.0 Hz	40.0
✓	10-26	FOC Minimum Stator Frequency	0.0–10.0% fN	2.0
✓	10-27	FOC Low Pass Filter Time Constant	1–1000 ms	50
✓	10-28	FOC Gain for Excitation Current Rise Time	33–100% Tr	100

	Pr.	Explanation	Settings	Default
✓	10-29	Upper Limit of Frequency Deviation	0.00–200.00 Hz	20.00
✓	10-31	I/F Mode, Current Command	0–150% rated current of the motor	40
✓	10-32	PM FOC Sensorless Speed Estimator Bandwidth	0.00–600.00 Hz	5.00
✓	10-34	PM Sensorless Speed Estimator Low-Pass Filter Gain	0.00–655.35	1.00
✓	10-35	AMR (Kp) Gain	0.00–3.00	1.00
✓	10-36	AMR (Ki) Gain	0.00–3.00	0.20
✓	10-39	Frequency Point to Switch from I/F Mode to PM Sensorless Mode	0.00–599.00 Hz	20.00
✓	10-42	Initial Angle Detection Pulse Value	0.0–3.0	1.0
✓	10-49	Zero Voltage Time during Start-Up	0.000–60.000 sec.	0.000
✓	10-51	Injection Frequency	0–1200 Hz	500
✓	10-52	Injection Magnitude	115V / 230V models: 100.0 V 460V models: 200.0 V 575V models: 200.0 V **NOTE:** The setting range varies depending on the voltage.	15.0 30.0 37.5
✓	10-53	Angle Detection Method	0: Disabled 1: Force attracting the rotor to zero degrees 2: High frequency injection 3: Pulse injection	0

11 Advanced Parameters

	Pr.	Explanation	Settings	Default
	11-00	System Control	bit 0: Auto-tuning for ASR and APR bit 3: Dead time compensation closed bit 7: Save or do not save the frequency	0
	11-01	Per-Unit of System Inertia	1–65535 (256 = 1 PU)	256
✓	11-02	ASR1 / ASR2 Switch Frequency	5.00–599.00 Hz	7.00
✓	11-03	ASR1 Low-Speed Bandwidth	1–40 Hz	Read only
✓	11-04	ASR2 High-Speed Bandwidth	1–40 Hz	Read only
✓	11-05	Zero-Speed Bandwidth	1–40 Hz	Read only
✓	11-06	ASR1 Gain	0–40 Hz	10
✓	11-07	ASR1 Integral Time	0.000–10.000 sec.	0.100
✓	11-08	ASR2 Gain	0–40 Hz	10
✓	11-09	ASR2 Integral Time	0.000–10.000 sec.	0.100
✓	11-10	ASR Gain of Zero Speed	0–40 Hz	10
✓	11-11	ASR Integral Time of Zero Speed	0.000–10.000 sec.	0.100
✓	11-12	Gain for ASR Speed Feed Forward	0–200%	0
✓	11-13	PDFF Gain Value	0–200%	30
✓	11-14	ASR Output Low Pass Filter Time	0.000–0.350 sec.	0.008
✓	11-15	Notch Filter Depth	0–20 db	0
✓	11-16	Notch Filter Frequency	0.00–200.00 Hz	0.00
✓	11-17	Forward Motor Torque Limit	0–500%	500
✓	11-18	Forward Regenerative Torque Limit	0–500%	500
✓	11-19	Reverse Motor Torque Limit	0–500%	500
✓	11-20	Reverse Regenerative Torque Limit	0–500%	500
✓	11-21	Flux Weakening Curve for Motor 1 Gain Value	0–200%	90
✓	11-22	Flux Weakening Curve for Motor 2 Gain Value	0–200%	90
✓	11-23	Flux Weakening Area Speed Response	0–150%	65
✓	11-27	Maximum Torque Command	0–500%	100
✓	11-28	Torque Offset Source	0: Disable 1: Analog signal input 2: RS-485 communication (Pr.11-29) 3: Controlled through external terminals (Pr.11-30–11-32)	0

	Pr.	Explanation	Settings	Default
✓	11-29	Torque Offset Setting	-100.0–100.0%	0.0
✓	11-30	High Torque Offset	-100.0–100.0%	30.0
✓	11-31	Middle Torque Offset	-100.0–100.0%	20.0
✓	11-32	Low Torque Offset	-100.0–100.0%	10.0
✓	11-33	Torque Command Source	0: Digital keypad 1: RS-485 communication (Pr.11-34) 2: Analog signal input (Pr.03-00) 3: CANopen 5: Communication Card	0
✓	11-34	Torque Command	-100.0–100.0%	0.0
✓	11-35	Torque Command Filter Time	0.000–1.000 sec.	0.000
	11-36	Speed Limit Selection	0: Set by Pr.11-37 (forward speed limit) and Pr.11-38 (reverse speed limit) 1: Set by Pr.00-20 (Master frequency command (AUTO, REMOTE) source) and Pr.11-37, 11-38 2: Set by Pr.00-20 (master frequency command (AUTO, REMOTE) source)	0
✓	11-37	Forward Speed Limit (Torque Mode)	0–120%	10
✓	11-38	Reverse Speed Limit (Torque Mode)	0–120%	10
	11-41	PWM Mode Selection	0: Two-phase modulation mode 2: Space vector modulation mode	2
✓	11-42	System Control Flag	0000–FFFFh	0000

13 Industry Application Parameters

Pr.	Explanation	Settings	Default
13-00	Industry-Specific Parameter Application	00: Disabled 01: User-defined parameter 02: Compressor 03: Fan 04: Pump 05: Conveyor 06: Machine tool 07: Packing 08: Textiles 10: Logistics 11: Tension PID 12: Tension PID + master / auxiliary frequency	00
13-01 – 13-50	Application Parameters (User-Defined)		

14 Protection Parameters (2)

Pr.	Explanation	Settings	Default
14-50	Output Frequency at Malfunction 2	0.00–599.00 Hz	Read only
14-51	DC bus Voltage at Malfunction 2	0.0–6553.5 V	Read only
14-52	Output Current at Malfunction 2	0.00–655.35 Amp	Read only
14-53	IGBT Temperature at Malfunction 2	-3276.7–3276.7°C	Read only
14-54	Output Frequency at Malfunction 3	0.00–599.00 Hz	Read only
14-55	DC bus Voltage at Malfunction 3	0.0–6553.5 V	Read only
14-56	Output Current at Malfunction 3	0.00–655.35 Amp	Read only
14-57	IGBT Temperature at Malfunction 3	-3276.7–3276.7°C	Read only
14-58	Output Frequency at Malfunction 4	0.00–599.00 Hz	Read only
14-59	DC bus Voltage at Malfunction 4	0.0–6553.5 V	Read only
14-60	Output Current at Malfunction 4	0.00–655.35 Amp	Read only
14-61	IGBT Temperature at Malfunction 4	-3276.7–3276.7°C	Read only
14-62	Output Frequency at Malfunction 5	0.00–599.00 Hz	Read only
14-63	DC bus Voltage at Malfunction 5	0.0–6553.5 V	Read only
14-64	Output Current at Malfunction 5	0.00–655.35 Amp	Read only
14-65	IGBT Temperature at Malfunction 5	-3276.7–3276.7°C	Read only
14-66	Output Frequency at Malfunction 6	0.00–599.00 Hz	Read only
14-67	DC bus Voltage at Malfunction 6	0.0–6553.5 V	Read only
14-68	Output Current at Malfunction 6	0.00–655.35 Amp	Read only
14-69	IGBT Temperature at Malfunction 6	-3276.7–3276.7°C	Read only
14-70	Fault Record 7	Refer to fault record Pr.06-17–Pr.06-22	0
14-71	Fault Record 8	Refer to fault record Pr.06-17–Pr.06-22	0
14-72	Fault Record 9	Refer to fault record Pr.06-17–Pr.06-22	0
14-73	Fault Record 10	Refer to fault record Pr.06-17–Pr.06-22	0
✓ 14-74	Over-Torque Detection Selection (Motor 3)	0: No function 1: Continue operation after over-torque detection during constant speed operation 2: Stop after over-torque detection during constant speed operation	0

	Pr.	Explanation	Settings	Default
			3: Continue operation after over-torque detection during RUN 4: Stop after over-torque detection during RUN	
✓	14-75	Over-Torque Detection Level (Motor 3)	10–250% (100% corresponds to the rated current of the drive)	120
✓	14-76	Over-Torque Detection Time (Motor 3)	0.1–60.0 sec.	0.1
✓	14-77	Over-Torque Detection Selection (Motor 4)	0: No function 1: Continue operation after over-torque detection during constant speed operation 2: Stop after over-torque detection during constant speed operation 3: Continue operation after over-torque detection during RUN 4: Stop after over-torque detection during RUN	0
✓	14-78	Over-Torque Detection Level (Motor 4)	10–250% (100% corresponds the rated current of the drive)	120
✓	14-79	Over-Torque Detection Time (Motor 4)	0.1–60.0 sec.	0.1
✓	14-80	Electronic Thermal Relay Selection 3 (Motor 3)	0: Inverter motor (with external forced cooling) 1: Standard motor (motor with the fan on the shaft) 2: Disable	2
✓	14-81	Electronic Thermal Relay Action Time 3 (Motor 3)	30.0–600.0 sec.	60.0
✓	14-82	Electronic Thermal Relay Selection 4 (Motor 4)	0: Inverter motor (with external forced cooling) 1: Standard motor (motor with the fan on the shaft) 2: Disable	2
✓	14-83	Electronic Thermal Relay Action Time 4 (Motor 4)	30.0–600.0 sec.	60.0

[This page is intentionally left blank]

Chapter 12 Descriptions of Parameter Settings

12-1 Descriptions of Parameter Settings

12-2 Adjustment and Application

12-1 Descriptions of Parameter Settings

00 Drive Parameters

You can set this parameter during operation.

00-00 AC Motor Drive Identity Code

Default: Read only

Settings Read only

00-01 AC Motor Drive Rated Current Display

Default: Read only

Settings Read only

Pr.00-00 displays the AC motor drive identity code. Use the following specification table to check if Pr.00-01 setting is the rated current of the AC motor drive. Pr.00-01 corresponds to the identity code of Pr.00-00.

The default is the rated current for heavy duty. Set Pr.00-16 = 0 to display the rated current for normal duty.

Models	**115V Models: One-phase**			**230V Models: One-phase**				
Frame	A	B	C	A/B		B	C	
Power (kW)	0.2	0.4	0.75	0.2	0.4	0.75	1.5	2.2
Power (HP)	0.25	0.5	1	0.25	0.5	1	2	3
Identity Code	102	103	104	302	303	304	305	306
Rated Current for Heavy Duty	1.6	2.5	4.8	1.6	2.8	4.8	7.5	11
Rated Current for Normal Duty	1.8	2.7	5.5	1.8	3.2	5	8.5	12.5

Models	**230V Models: Three-phase**									
Frame	A			B	C		D	E		F
Power (kW)	0.2	0.4	0.75	1.5	2.2	3.7/4	5.5	7.5	11	15
Power (HP)	0.25	0.5	1	2	3	5	7.5	10	15	20
Identity Code	202	203	204	205	206	207	208	209	210	211
Rated Current for Heavy Duty	1.6	2.8	4.8	7.5	11	17	25	33	49	65
Rated Current for Normal Duty	1.8	3.2	5	8	12.5	19.5	27	36	51	69

Models	**460V Models: Three-phase**											
Frame	A/B		B	C			D		E		F	
Power (kW)	0.4	0.75	1.5	2.2	3	3.7/4	5.5	7.5	11	15	18.5	22
Power (HP)	0.5	1	2	3	4	5	7.5	10	15	20	25	30
Identity Code	403	404	405	406	482	407	408	409	410	411	412	413
Rated Current for Heavy Duty	1.5	2.7	4.2	5.5	7.3	9	13	17	25	32	38	45
Rated Current for Normal Duty	1.8	3	4.6	6.5	8	10.5	15.7	20.5	28	36	41.5	49

Models	575V Models: Three-phase					
Frame	A	B	C		D	
Power (kW)	0.75	1.5	2.2	3.7	5.5	7.5
Power (HP)	1	2	3	5	7.5	10
Identity Code	504	505	506	507	508	509
Rated Current for Heavy Duty	1.7	3	4.2	6.6	9.9	12.2
Rated Current for Normal Duty	2.1	3.6	5	8	11.5	15

00-02 Parameter Reset

Default: 0

Settings
0: No Function
1: Write protection for parameters
5: Return kWh displays to 0
6: Reset PLC (including CANopen Master index)
7: Reset CANopen Slave index
8: Keypad does not respond
9: Reset all parameters to defaults (base frequency is 50 Hz)
10: Reset all parameters to defaults (base frequency is 60 Hz)
11: Reset all parameters to defaults with base frequency at 50 Hz (keep the user-defined parameter values Pr.13-01–Pr.13-50)
12: Reset all parameters to defaults with base frequency at 60 Hz (keep the user-defined parameter values Pr.13-01–Pr.13-50)

- 1: All parameters are read only except Pr.00-02, Pr.00-07, and Pr.00-08. Set Pr.00-02 to 0 before changing other parameter settings.
- 5: You can return the kWh displayed value to 0 even during drive operation. For example, you can set Pr.05-26–Pr.05-30 to 0.
- 6: Clear the internal PLC program (includes the related settings of PLC internal CANopen master).
- 7: Reset the related settings of CANopen slave.
- 8: RUN key on the keypad is invalid; the rest of the keys work normally. Set Pr.02-00 to 0 to unlock the setting.
- 9 or 10: Reset all parameters to defaults. If you have set a password (Pr.00-08), unlock the password (Pr.00-07) to clear the password you have set before you reset all parameters.
- For settings of 6, 7, 9, 10, 11 and 12, you must reboot the motor drive after you finish the setting.

00-03 Start-up Display

Default: 0

Settings
0: F (frequency command)
1: H (output frequency)
2: U (user-defined) see Pr.00-04
3: A (output current)

- Determines the start-up display page after power is applied to the drive. The user-defined contents display according to the Pr.00-04 settings.

00-04 Content of Multi-function Display (User-Defined)

Default: 3

Settings
0: Display output current (A) (Unit: Amp)
1: Display counter value (c) (Unit: CNT)
2: Display the drive's actual output frequency (H.) (Unit: Hz)
3: Display the drive's DC bus voltage (v) (Unit: V_{DC})
4: Display the drive's output voltage (E) (Unit: V_{AC})
5: Display the drive's output power angle (n) (Unit: deg)
6: Display the drive's output power (P) (Unit: kW)
7: Display the motor speed (r) (Unit: rpm)
8: Display the drive's estimated output torque, motor's rated torque is 100% (t) (Unit: %)
10: Display PID feedback (b) (Unit: %)
11: Display AVI analog input terminal signal (1.) (Unit: %)
12: Display ACI analog input terminal signal (2.) (Unit: %)
14: Display the drive's IGBT temperature (i.) (Unit: oC)
16: The digital input status (ON / OFF) (i)
17: The digital output status (ON / OFF) (o)
18: Display multi-step speed (S)
19: The corresponding CPU digital input pin status (d)
20: The corresponding CPU digital output pin status (0.)
22: Pulse input frequency (S.)
25: Overload count (0.00–100.00%) (o.) (Unit: %)
26: Ground Fault GFF (G.) (Unit: %)
27: DC bus voltage ripple (r.) (Unit: V_{DC})
28: Display PLC register D1043 data (C)
30: Display the output of User-defined (U)
31: Display Pr.00-05 user gain (K)
35: Control mode display:
0 = Speed control mode (SPD)
1 = Torque control mode (TQR) (t.)
36: Present operating carrier frequency of the drive (J.) (Unit: Hz)
38: Display the drive status (6.) (Refer to Explanation 6 below)
39: Display the drive's estimated output torque, positive and negative, using Nt-m as unit (t 0.0: positive torque; -0.0: negative torque) (C.)
40: Torque command (L.) (Unit: %)
41: kWh display (J) (Unit: kWh)
42: PID target value (h.) (Unit: %)
43: PID compensation (o.) (Unit: %)
44: PID output frequency (b.) (Unit: Hz)
46: Auxiliary frequency value (U.) (Unit: Hz)
47: Master frequency value (A.) (Unit: Hz)

48: Frequency value after addition and subtraction of master and auxiliary frequency (L.) (Unit: Hz)
51: PMSVC torque offset
58: Pr.00-05 User gain display (K) (Does not display decimal places.)
62: I2t (o.) (Unit: %)
63: Error code (E.)
64: Warning code (n.)
65: Accumulated motor operation record (day) (r.) (Refer to Pr.05-32)

Explanation 1

- It can also display negative values when setting analog input bias (Pr.03-03–03-10).
- Example: Assume that AVI input voltage is 0 V, Pr.03-03 is 10.0%, Pr.03-07 is 4 (Bias serves as the center).

Explanation 2

Example: If MI1 and MI6 are ON, the following table shows the status of the terminals.

Normally opened contact (N.O.): (0: OFF, 1: ON)

Terminal	MI7	MI6	MI5	MI4	MI3	MI2	MI1
Status	0	1	0	0	0	0	1

- The value is 0000 0000 0010 0001 in binary and 0021H in HEX. When Pr.00-04 is set to 16 or 19, the u page on the keypad displays 0021h.
- The setting 16 is the ON / OFF status of digital input according to Pr.02-12 setting and the setting 19 is the corresponding CPU pin ON / OFF status of the digital input.
- When MI1 / MI2 default setting is two-wire / three-wire operation control (Pr.02-00 ≠ 0), and MI3 is set to three-wire, it is not affected by Pr.02-12.
- You can set 16 to monitor the digital input ON / OFF status, and then set 19 to check if the circuit is normal.

Explanation 3

Example: Assume that RY: Pr.02-13 is set to 9 (Drive is ready). After the drive is powered on, if there is no other abnormal status, the contact is ON. The display status is shown below.

Normally opened contact (N.O.):

Terminal	MO2	MO1	RY1
Status	0	0	1

- If Pr.00-04 is set to 17 or 20, it displays in hexadecimal “0001h” with LED u page is ON in the keypad.
- The setting 17 is the ON / OFF status of digital output according to Pr.02-18 setting and the setting 20 is the corresponding CPU pin ON / OFF status of the digital output.
- You can set 17 to monitor the digital output ON / OFF status, and then set 20 to check if the circuit is normal.

Explanation 4

- Setting value 8: 100% means the motor rated torque.
  Motor rated torque = (motor rated power × 60 / 2π) ÷ motor rated speed

Explanation 5

- Setting value 25: when displayed value reaches 100.00%, the drive shows “oL” as an overload warning.

Explanation 6

- Setting value 38:

  bit 0: The drive is running forward.
  bit 1: The drive is running backward.
  bit 2: The drive is ready.
  bit 3: Errors occurred on the drive.
  bit 4: The drive is running.
  bit 5: Warnings occurred on the drive.

00-05 Coefficient Gain in Actual Output Frequency

Default: 1.00

Settings 0.00–160.00

Sets the user-defined unit coefficient gain. Set Pr.00-04 = 31 to display the calculation result on the screen (calculation = output frequency × Pr.00-05).

00-06 Firmware Version

Default: Read only

Settings Read only

00-07 Parameter Protection Password Input

Default: 0

Settings 0–65535

Display 0–4 (the number of password attempts)

This parameter allows you to enter your password (which is set in Pr.00-08) to unlock the parameter protection and to make changes to the parameter.

To avoid problems in the future, be sure to write down the password after you set this parameter.

Pr.00-07 and Pr.00-08 are used to prevent personnel from setting other parameters by accident.

If you forget the password, clear the password setting by entering 9999 and pressing the ENTER key, then enter 9999 again and press ENTER within 10 seconds. After decoding, all the settings return to default.

When setting is under password protection, all the parameters read 0, except Pr.00-08.

00-08 Parameter Protection Password Setting

Default: 0

Settings 0–65535

0: No password protection or password is entered correctly (Pr.00-07)

1: Password has been set

This parameter is for setting the password protection. Password can be set directly the first time. After you set the password, the value of Pr.00-08 is 1, which means password protection is activated. At this time, if you want to change any of the parameter settings, you must enter the correct password in Pr.00-07 to deactivate the password temporarily, and this would make Pr.00-08 become 0. After you finish setting the parameters, reboot the motor drive and the password is activated again.

- Entering the correct password in Pr.00-07 only temporarily deactivates the password. To permanently deactivate password protection, set Pr.00-08 to 0 manually. Otherwise, password protection is always reactivated after you reboot the motor drive.
- The keypad copy function works only when the password protection is deactivated (temporarily or permanently), and the password set in Pr.00-08 cannot be copied to the keypad. So when copying parameters from the keypad to the motor drive, set the password manually again in the motor drive to activate password protection.

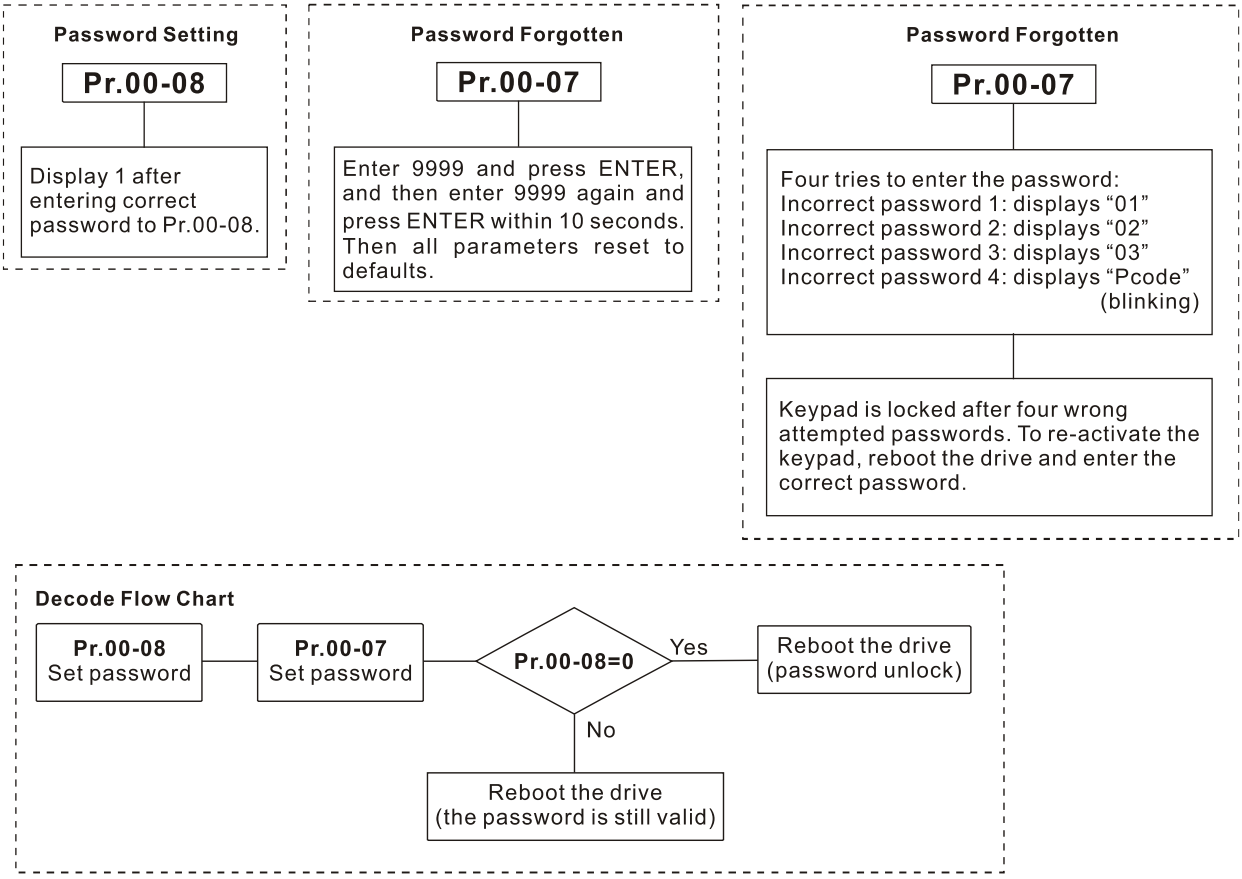

00-10 Control Mode

Default: 0

Settings 0: Speed Control mode
2: Torque mode

- Determines the control mode of the AC motor drive.
- When Pr.00-10 = 2: Torque mode, control mode is IM TQC Sensorless.

00-11 Speed Control Mode

Default: 0

Settings 0: IMVF (IM V/F control)
1: IMVFPG (IM V/F control + MI7 one-phase pulse input)
2: IM/PM SVC (IM / PM Space Vector Control)
5: IMFOC Sensorless (IM Field-Oriented sensorless vector Control)

- Determines the control mode of the AC motor drive:

0: IM V/F control: you can set the proportion of V/F as required and control multiple motors simultaneously.

1: IM V/F control + MI7 one-phase pulse input: you can use the MI7 one-phase pulse input for closed-loop speed control.

2: IM/PM space vector control: gets the optimal control by auto-tuning the motor parameters.

5: IM FOC sensorless: IM field-oriented sensorless vector control.

- If you use MI7 single-phase pulse input as speed feedback, apply it for VFPG closed-loop control.
- If you use 1: IMVFPG control mode along with MI7 as speed feedback, you also need to set Pr.10-00 = 5 and Pr.10-02 = 5.
- When Pr.00-10 = 0 and you set Pr.00-11 to 0, the V/F control diagram is as follows:

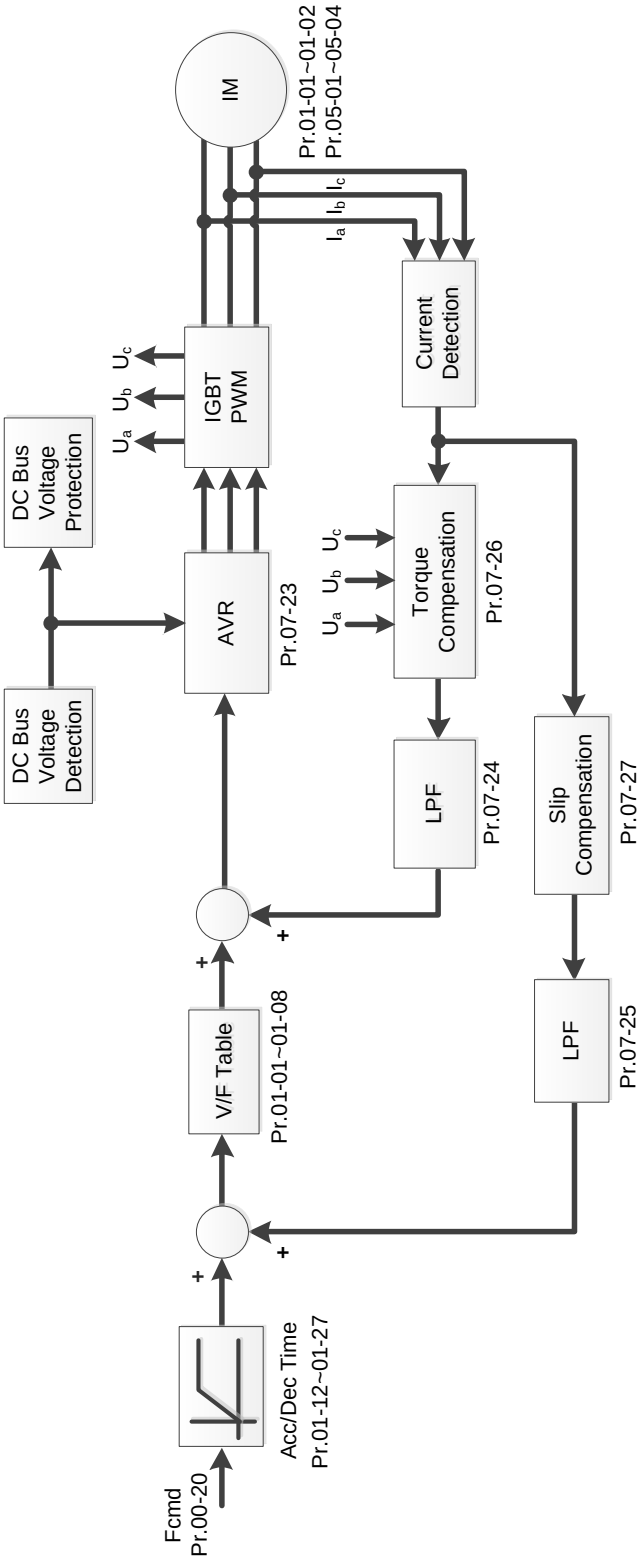

When Pr.00-10 = 0 and you set Pr.00-11 to 1, the V/F control + MI7 one-phase pulse input diagram is as follows:

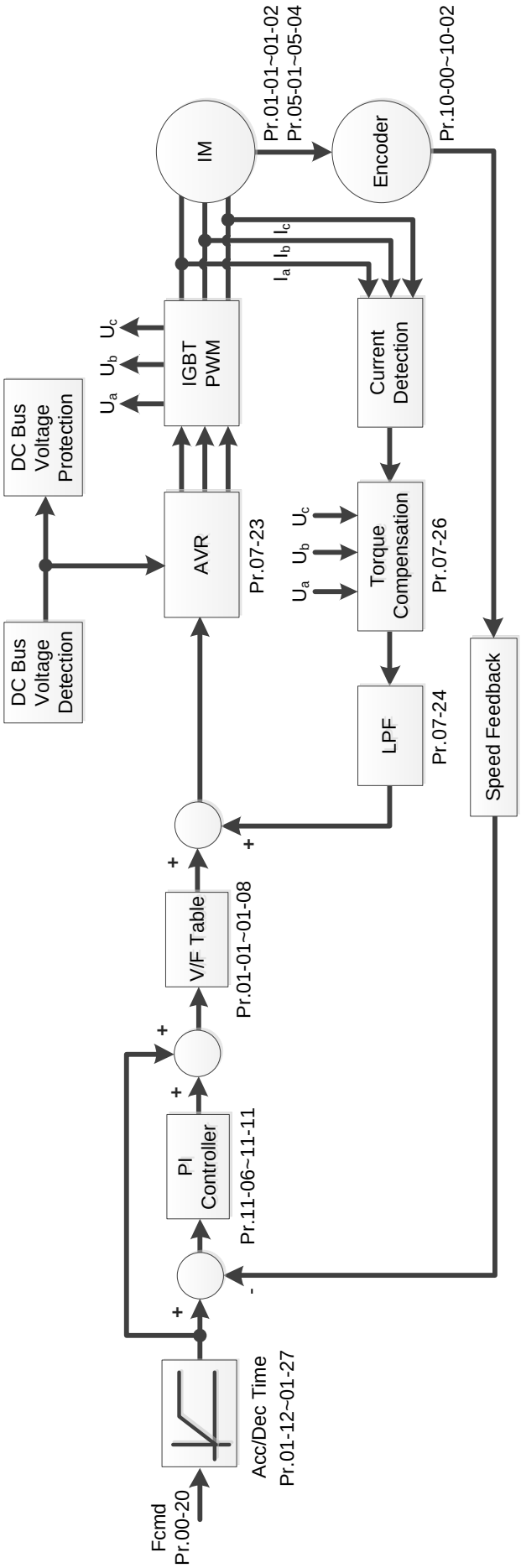

When Pr.00-10 = 0 and you set Pr.00-11 to 2, the sensorless vector control diagram is as follows:
IM Space Vector Control (IMSVC):

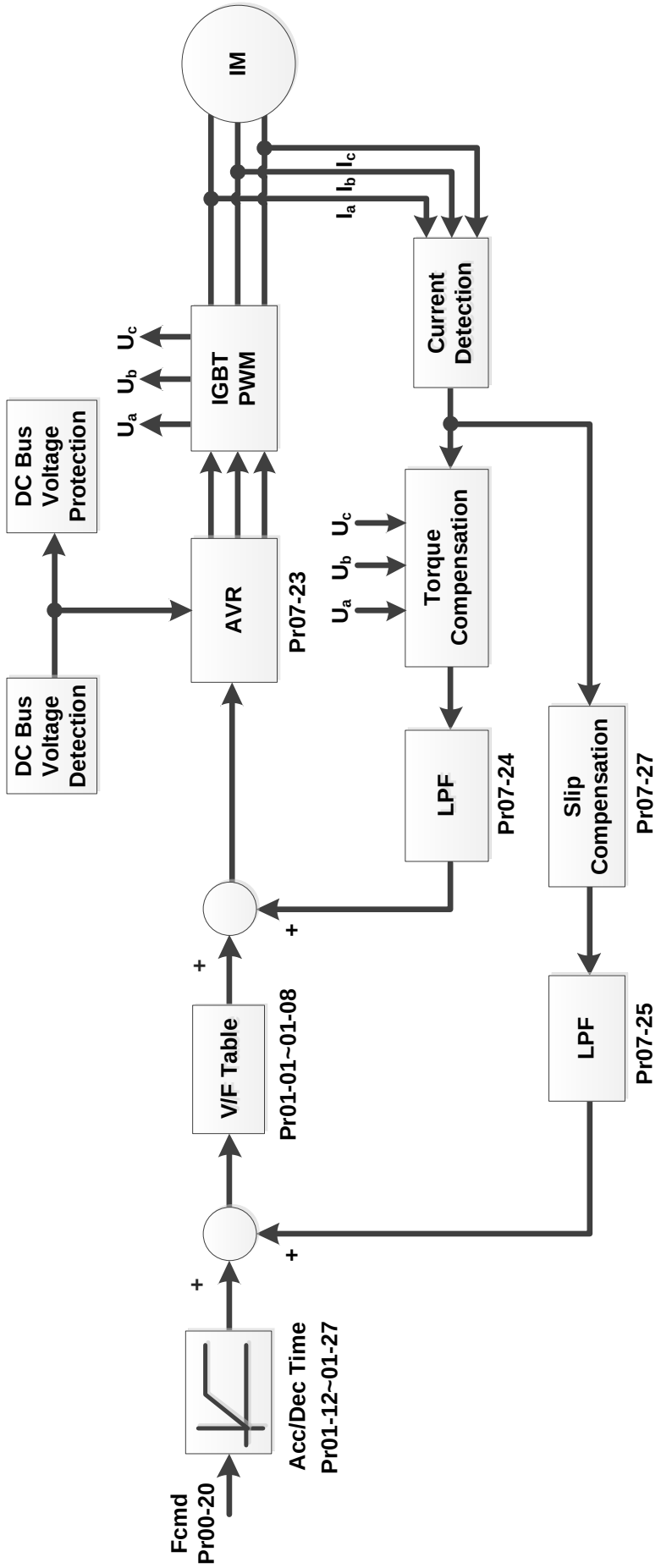

PM Space Vector Control (PMSVC):

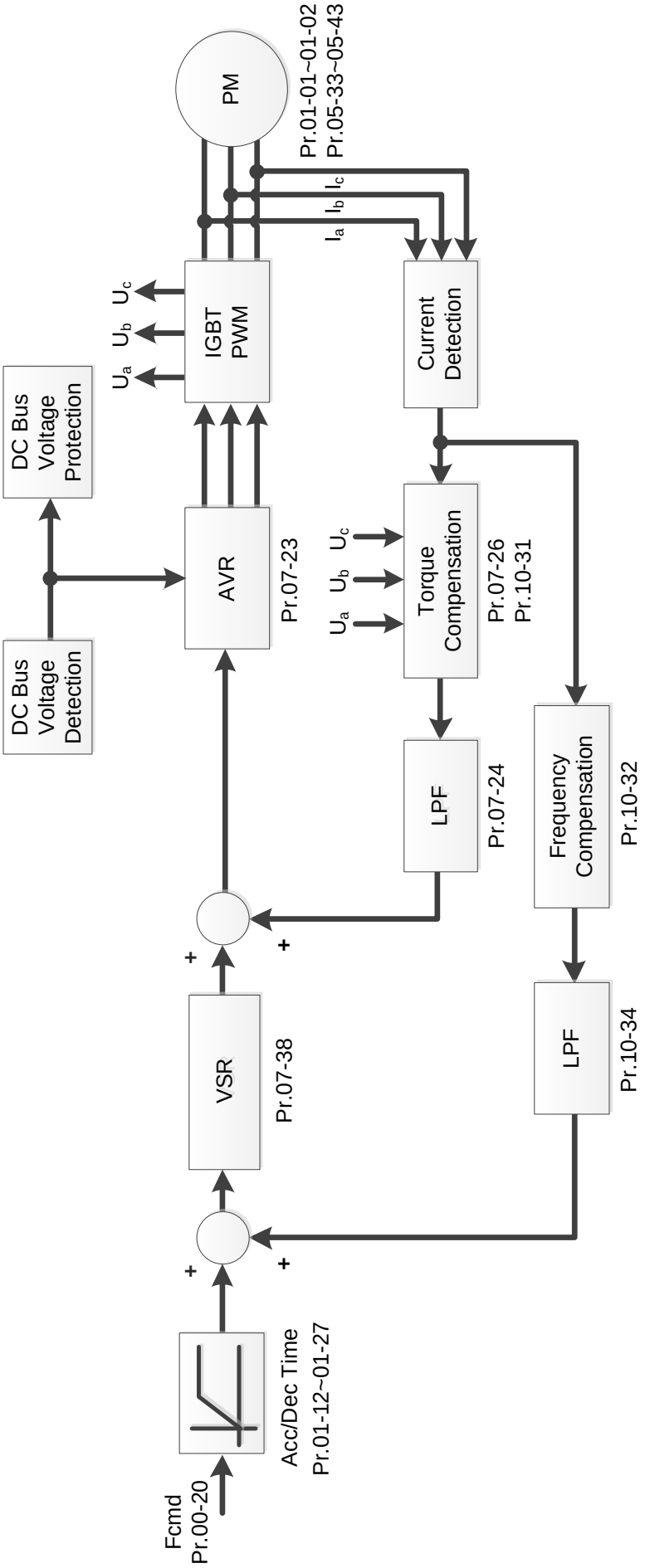

When Pr.00-10 = 0 and you set Pr.00-11 to 5, IMFOC Sensorless control diagram is as follows:

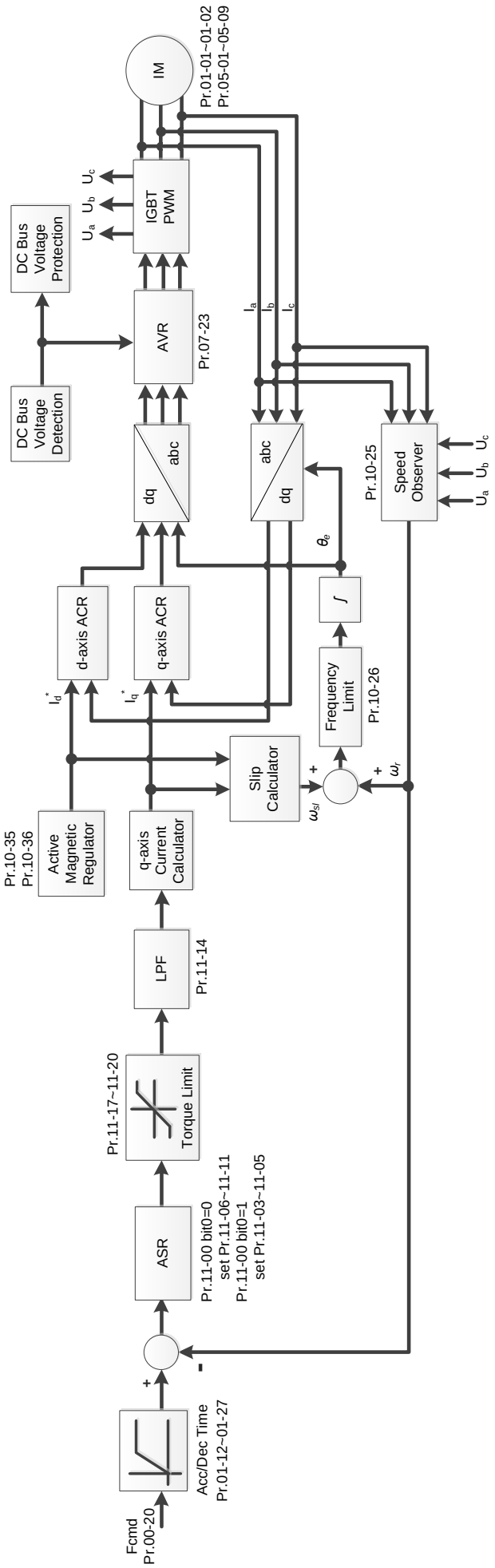

00-16 Load Selection

Default: 1

Settings 0: Normal load
1: Heavy load

- Normal duty: overload rated output current 150% in 3 seconds. (120%, 1 minute). Refer to Pr.00-17 for the setting for the carrier frequency. Refer to Chapter 9 Specifications or Pr.00-01 for the rated current.
- Heavy duty: overload rated output current 200% in 3 seconds. (150%,1 minute) Refer to Pr.00-17 for the setting for the carrier frequency. Refer to Chapter 9 Specifications or Pr. 00-01 for the rated current.
- Pr.00-01 varies with the setting value of Pr.00-16. The default value and maximum of Pr.06-03 and Pr.06-04 also vary with the setting value of Pr.00-16.
- In normal duty, the default setting of Pr.06-03 and Pr.06-04 is 120%, and the maximum is 150%.
- In heavy duty, the default setting of Pr.06-03 and Pr.06-04 is 180%, and the maximum is 200%.

00-17 Carrier Frequency

Default: 4 / 4

Settings Normal load: 2–15 kHz
Heavy load: 2–15 kHz
NOTE:
When Pr.00-11 = 5 (IMFOC Sensorless), the maximum setting value for the carrier frequency is 10 kHz.

- Determines the PWM carrier frequency for the AC motor drive.

Models	115V / 230V		460V	575V
	1/4–1 HP [0.2–0.75 kW]	2–20 HP [1.5–15 kW]	0.5–30 HP [0.4–22 kW]	1–10 HP [0.75–7.5 kW]
Settings Range	2–15 kHz			
Normal Duty Default	4 kHz			
Heavy Duty Default	4 kHz			

- From the table, you see that the PWM carrier frequency has significant influences on the electromagnetic noise, the AC motor drive heat dissipation, and the motor acoustic noise. Therefore, if the surrounding noise is greater than the motor noise, lower the carrier frequency to reduce the temperature rise. Although the motor has quiet operation in the higher carrier frequency, consider the entire wiring and interference.
- When the carrier frequency is higher than the default, decrease the carrier frequency to protect the drive. Refer to Pr.06-55 for the related setting and details.

00-19 PLC Command Mask

Default: Read only

Settings bit 0: Control command is forced by PLC control
bit 1: Frequency command is forced by PLC control
bit 3: Torque command is forced by PLC control

- Determines if the frequency command, control command or torque command is locked by PLC.

00-20 Master Frequency Command Source (AUTO, REMOTE)

Default: 0

Settings
0: Digital keypad
1: RS-485 communication input
2: External analog input (Refer to Pr.03-00)
3: External UP / DOWN terminal (multi-function input terminals)
4: Pulse input without direction command
(Refer to Pr.10-16 without considering direction)
6: CANopen communication card
7: Digital keypad potentiometer knob
8: Communication card (does not include CANopen card)
9: PID controller

NOTE:
HOA (Hand-Off-Auto) function is valid only when you use with MO function setting 42 and 56 or with KPC-CC01 (optional).

- Determines the master frequency source in the “AUTO, REMOTE “mode. The default is AUTO mode.
- You can switch the AUTO, REMOTE mode with the keypad KPC-CC01 (optional) or the multi-function input terminal (MI) to set the master frequency source.
- It returns to AUTO or REMOTE mode whenever you cycle the power. If you use a multi-function input terminal to switch between HAND (LOCAL) and AUTO (REMOTE) mode, the highest priority is the multi-function input terminal.
- The pulse of Pr.00-20 = 4 (Pulse input without direction command) is input by MI7.
- When Pr.00-20 = 9, Pr.08-65 automatically set as 1 at the same time. Pr.08-65 needs to be set as 0 for changing back to other values.
- When Pr.00-20 = 7, set Pr.03-40 = 50% and Pr.03-41 (VR Positive / Negative Bias) = 4 (Bias serves as the center). If you need to reverse the setting, set Pr.03-10 = 1.

00-21 Operation Command Source (AUTO, REMOTE)

Default: 0

Settings
0: Digital keypad
1: External terminals
2: RS-485 communication input
3: CANopen communication card
5: Communication card (does not include CANopen card)

NOTE:
HOA (Hand-Off-Auto) function is valid only when you use with MO function setting 42 and 56 or with KPC-CC01 (optional).

- Determines the operation frequency source in the “AUTO, REMOTE” mode.
- In the HOA mode, if the multi-function input terminal (MI) function setting 41 and 42 are OFF, the drive does not receive any operation command and JOG is invalid.

00-22 Stop Method

Default: 0

Settings 0: Ramp to stop
1: Coast to stop

Determines how the motor is stopped when the drive receives the Stop command.

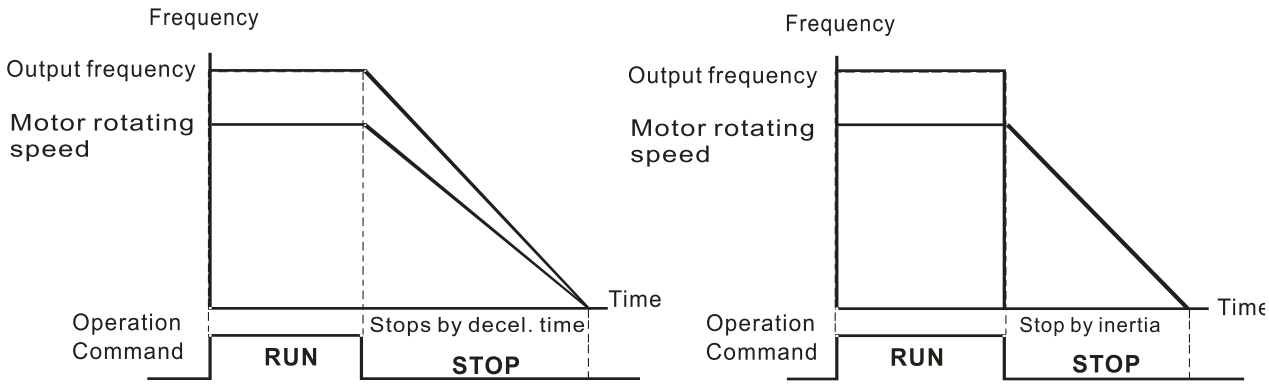

Ramp to Stop and Coast to Stop

160. **Ramp to stop:** According to the set deceleration time, the AC motor drive decelerates to 0 Hz or the minimum output frequency (Pr.01-07), and then stop.
161. **Coast to stop:** According to the load inertia, the AC motor drive stops output immediately, and the motor coasts to stop.
   - ☑ Use “ramp to stop” for the safety of personnel or to prevent material from being wasted in applications where the motor must stop immediately after the drive stops. You must set the deceleration time accordingly.
   - ☑ If idling is allowed or the load inertia is large, use “coast to stop”. For example, blowers, punching machines and pumps.

00-23 Motor Direction Control

Default: 0

Settings 0: Enable forward / reverse
1: Disable reverse
2: Disable forward

Enables the motor to run in the forward and reverse direction. You can use it to prevent a motor from running in a direction that would cause injury or damage to the equipment, especially when only one running direction is allowed for the motor load.

00-24 Digital Operator (Keypad) Frequency Command Memory

Default: Read only

Settings Read only

If the keypad is the frequency command source, when Lv or fault occurs, this parameter stores the current frequency command.

00-25 User-Defined Characteristics

Default: 0

Settings bit 0–3: user-defined decimal places

0000h-0000b: no decimal place

0001h-0001b: one decimal place

0002h-0010b: two decimal places

0003h-0011b: three decimal places

bit 4–15: user-defined unit

000xh: Hz

001xh: rpm

002xh: %

003xh: kg

004xh: m/s

005xh: kW

006xh: HP

007xh: ppm

008xh: 1/m

009xh: kg/s

00Axh: kg/m

00Bxh: kg/h

00Cxh: lb/s

00Dxh: lb/m

00Exh: lb/h

00Fxh: ft/s

010xh: ft/m

011xh: m

012xh: ft

013xh: degC

014xh: degF

015xh: mbar

016xh: bar

017xh: Pa

018xh: kPa

019xh: mWG

01Axh: inWG

01Bxh: ftWG

01Cxh: psi

01Dxh: atm

01Exh: L/s

01Fxh: L/m

020xh: L/h

021xh: m3/s

022xh: m3/h
023xh: GPM
024xh: CFM
xxxxh: Hz

bit 0–3:
The displayed units for the control frequency F page and user-defined (Pr.00-04 = d10, PID feedback), and the displayed number of decimal places for Pr.00-26 (support up to three decimal places).

bit 4–15:
The displayed units for the control frequency F page, user-defined (Pr.00-04 = d10, PID feedback) and Pr.00-26.

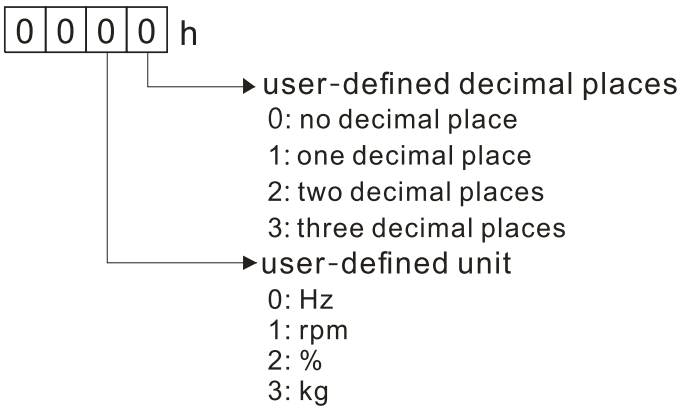

You must convert the setting value to decimal when using the keypad to set parameters.
Example: Assume that the user-defined unit is inWG and user-defined decimal place is the third decimal point. According to the information above, the corresponding unit to inWG is 01Axh (x is the set decimal point), and the corresponding unit to the third decimal place is 0003h, then inWG and the third decimal point displayed in hexadecimal is 01A3h, that is 419 in decimal value. Thus, set Pr.00-25 = 419 to complete the setting.

00-26 Maximum User-Defined Value

Default: 0

Settings 0: Disable
0–65535 (when Pr.00-25 is set to no decimal place)
0.0–6553.5 (when Pr.00-25 is set to one decimal place)
0.00–655.35 (when Pr.00-25 is set to two decimal places)
0.000–65.535 (when Pr.00-25 is set to three decimal places)

When Pr.00-26 is NOT set to 0, the user-defined value is enabled. After selecting the displayed unit and number of decimal places with Pr.00-25, the setting value of Pr.00-26 corresponds to Pr.01-00 (drive's maximum operating frequency).
Example: When the frequency set in Pr.01-00 = 60.00 Hz, the maximum user-defined value for Pr.00-26 is 100.0%. This also means that Pr.00-25 is set at 33 (0021h) to select % as the unit.
NOTE:
Set Pr.00-25 before using Pr.00-26. After you finish setting, when Pr.00-26 is not 0, the displayed unit on the keypad shows correctly according to Pr.00-25 settings.

00-27 User-Defined Value

Default: Read only

Settings Read only

📖 Pr.00-27 displays the user-defined value when Pr.00-26 is not set to 0.

00-29 LOCAL / REMOTE Selection

Default: 0

Settings
0: Standard HOA function
1: When switching between local and remote, the drive stops.
2: When switching between local and remote, the drive runs with REMOTE settings for frequency and operating status.
3: When switching between local and remote, the drive runs with LOCAL settings for frequency and operating status.
4: When switching between local and remote, the drive runs with LOCAL settings when switched to Local and runs with REMOTE settings when switched to Remote for frequency and operating status.

📖 The default for Pr.00-29 is 0, that is, the standard HOA (Hand-Off-Auto) function. Set the AUTO and HAND frequency and operation source with Pr.00-20, 00-21 and Pr.00-30, 00-31. The external terminal function (MI) = 56 for LOC / REM mode selection is disabled when Pr.00-29=0.

📖 If Pr.00-29 is not set to 0, the top right corner of digital keypad KPC-CC01 (optional) displays LOC or REM. Set the REMOTE and LOCAL frequency and operation source with Pr.00-20, 00-21 and Pr.00-30, 00-31. Set the multi-function input terminal (MI) = 56 to set the LOC / REM selection. The AUTO key on the KPC-CC01 (optional) is the REMOTE function; the HAND key is the LOCAL function.

📖 If Pr.00-29 is not set to 0, the AUTO / HAND keys are disabled. In this case, the external terminal (MI) setting = 56 (local / remote selection) has the highest command priority.

00-30 Master Frequency Command Source (HAND, LOCAL)

Default: 0

Settings
0: Digital keypad
1: RS-485 communication input
2: External analog input (Refer to Pr.03-00)
3: External UP / DOWN terminal (multi-function input terminals)
4: Pulse input without direction command
(Refer to Pr.10-16 without considering direction)
6: CANopen communication card
7: Digital keypad potentiometer knob
8: Communication card (does not include CANopen card)
9: PID controller

NOTE:
HOA (Hand-Off-Auto) function is valid only when you use with MO function setting 41 and 56 or with KPC-CC01 (optional).

📖 Determines the master frequency source in the "HAND, LOCAL" mode.

- You can switch the HAND, LOCAL mode with the keypad KPC-CC01 (optional) or the multi-function input terminal (MI) to set the master frequency source.
- It returns to AUTO or REMOTE mode whenever you cycle the power. If you use a multi-function input terminal to switch between HAND (LOCAL) and AUTO (REMOTE) mode, the highest priority is the multi-function input terminal.
- The pulse of Pr.00-30 = 4 (Pulse input without direction command) is input by MI7.
- When Pr.00-30 = 9, Pr.08-65 automatically set as 1 at the same time. Pr.08-65 needs to be set as 0 for changing back to other values.

00-31 Operation Command Source (HAND, LOCAL)

Default: 0

Settings
0: Digital keypad
1: External terminals
2: RS-485 communication input
3: CANopen communication card
5: Communication card (does not include CANopen card)

NOTE:
HOA (Hand-Off-Auto) function is valid only when you use with MO function setting 41 and 56 or with KPC-CC01 (optional).

- Determines the operation frequency source in the "HAND, LOCAL" mode.
- In the HOA mode, if the multi-function input terminal (MI) function setting 41 and 42 are OFF, the drive does not receive any operation command and JOG is invalid.

00-32 Digital Keypad STOP Function

Default: 0

Settings
0: STOP key disabled
1: STOP key enabled

- Valid when the operation command source is not the digital keypad (Pr.00-21 ≠ 0). When Pr.00-21 = 0, the STOP key on the digital keypad is not affected by this parameter.

00-35 Auxiliary Frequency Source

Default: 0

Settings
0: Master and auxiliary frequency function disabled
1: Digital keypad
2: RS-485 communication input
3: Analog input
4: External UP/DOWN key input (multi-function input terminals)
5: Pulse input without direction command (Refer to Pr.10-16)
6: CANopen communication card
7: Digital keypad potentiometer knob
8: Communication card

00-36 Master and Auxiliary Frequency Command Selection

Default: 0

Settings 0: Master + auxiliary frequency
1: Master - auxiliary frequency
2: Auxiliary - master frequency

- Master and auxiliary frequency command sets the master frequency source according to Pr.00-20, and sets the auxiliary frequency source according to Pr.00-35. This parameter determines the addition and subtraction of the master and auxiliary frequency.
- When Pr.00-36 = 0, 1, 2, the control command comes after adding or subtracting the master / auxiliary frequency and the acceleration and deceleration (including S-curve).
- If the value is negative after adding or subtracting the master / auxiliary frequency, Pr.03-10 determines whether to change the running direction.
- If you set the master frequency source (Pr.00-20 = 0) or the auxiliary frequency source (Pr.00-35 = 1) using the keypad, the F page of the keypad displays the setting frequency that you can use to set the master frequency or the auxiliary frequency. If the master frequency source or the auxiliary frequency source is NOT set by the keypad (Pr.00-20 ≠ 0 and Pr.00-35 ≠ 1), the F page of the keypad displays the value after adding or subtracting the master / auxiliary frequency.
- When setting the master frequency source and auxiliary frequency source, Pr.00-35 cannot be set to the same value as Pr.00-20 or Pr.00-30.
- When using the master and auxiliary frequency function, and the value after master and auxiliary frequency are added or subtracted is positive, the output frequency is limited by Pr.01-00 (Maximum operation frequency); if the value is negative, the output frequency is limited by Pr.08-67 (Master and auxiliary reverse running cutoff frequency).

00-47 Output Phase Order Selection

Default: 0

Settings 0: Standard
1: Exchange the rotation direction

- Without changing the wiring and light indicator, this parameter can be used to change the rotation direction from forward to reverse or from reverse to forward.
- When using this parameter with Pr.00-23 (Motor Direction Control), Pr.00-23 has priority over Pr.00-47.

00-48 Display Filter Time (Current)

Default: 0.100

Settings 0.001–65.535 sec.

- Minimizes the current fluctuation displayed by the digital keypad.

00-49 Display Filter Time (Keypad)

Default: 0.100

Settings 0.001–65.535 sec.

- Minimizes the value fluctuation displayed by the digital keypad.

00-50 Software Version (Date)

Default: Read only

Settings	Read only

📖 Displays the current drive software version by date.

[This page intentionally left blank]

01 Basic Parameters

You can set this parameter during operation.

01-00	Motor 1 Maximum Operation Frequency
01-52	Motor 2 Maximum Operation Frequency
01-53	Motor 3 Maximum Operation Frequency
01-62	Motor 4 Maximum Operation Frequency

Default: 60.00 / 50.00

Settings 0.00–599.00 Hz

Determines the AC motor drive's maximum operation frequency. All the AC motor drive frequency command sources (analog inputs 0–10 V, 4–20 mA, 0–20 mA, ±10 V) are scaled to correspond to the output frequency range.

01-01	Motor 1 Rated / Base Frequency
01-35	Motor 2 Rated / Base Frequency
01-54	Motor 3 Rated / Base Frequency
01-63	Motor 4 Rated / Base Frequency

Default: 60.00 / 50.00

Settings 0.00–599.00 Hz

Set this parameter according to the motor's rated frequency on the motor nameplate. If the motor's rated frequency is 60 Hz, set this parameter to 60. If the motor's rated frequency is 50 Hz, set this parameter to 50.

01-02	Motor 1 Rated / Base Voltage
01-36	Motor 2 Rated / Base Voltage
01-55	Motor 3 Rated / Base Voltage
01-64	Motor 4 Rated / Base Voltage

Default: 220.0 / 440.0 / 575.0

Settings 115V / 230V models: 0.0–255.0 V
460V models: 0.0–510.0 V
575V models: 0.0–637.0 V

Set this parameter according to the rated voltage on the motor nameplate. If the motor's rated voltage is 220 V, set this parameter to 220.0. If the motor's rated voltage is 200 V, set this parameter to 200.0.

There are many motor types in the market and the power system for each country is also different. The economical and convenient solution is to install an AC motor drive. Then there is no problem using the motor with different voltage and frequency inputs, and the motor drive can improve the original motor characteristics and useful life.

01-03	Mid-point Frequency 1 of Motor 1

Default: 3.00

Settings 0.00–599.00 Hz

01-04 Mid-point Voltage 1 of Motor 1

Default: 11.0 / 22.0 / 40.0

Settings 115V / 230V models: 0.0–240.0 V
460V models: 0.0–480.0 V
575V models: 0.0–600.0 V

01-37 Mid-point Frequency 1 of Motor 2

Default: 3.00

Settings 0.00–599.00 Hz

01-38 Mid-point Voltage 1 of Motor 2

Default: 11.0 / 22.0 / 40.0

Settings 115V / 230V models: 0.0–240.0 V
460V models: 0.0–480.0 V
575V models: 0.0–600.0 V

01-56 Mid-point Frequency 1 of Motor 3

Default: 3.00

Settings 0.00–599.00 Hz

01-57 Mid-point Voltage 1 of Motor 3

Default: 11.0 / 22.0 / 40.0

Settings 115V / 230V models: 0.0–240.0 V
460V models: 0.0–480.0 V
575V models: 0.0–600.0 V

01-65 Mid-point Frequency 1 of Motor 4

Default: 3.00

Settings 0.00–599.00 Hz

01-66 Mid-point Voltage 1 of Motor 4

Default: 11.0 / 22.0 / 40.0

Settings 115V / 230V models: 0.0–240.0 V
460V models: 0.0–480.0 V
575V models: 0.0–600.0 V

01-05 Mid-point Frequency 2 of Motor 1

Default: 1.50

Settings 0.00–599.00 Hz

01-06 Mid-point Voltage 2 of Motor 1

Default: 5.0 / 10.0 / 26.1

Settings 115V / 230V models: 0.0–240.0 V
460V models: 0.0–480.0 V
575V models: 0.0–600.0 V

01-39 Mid-point Frequency 2 of Motor 2

Default: 1.50

Settings 0.00–599.00 Hz

01-40 Mid-point Voltage 2 of Motor 2

Default: 5.0 / 10.0 / 26.1

Settings 115V / 230V models: 0.0–240.0 V
460V models: 0.0–480.0 V
575V models: 0.0–600.0 V

01-58 Mid-point Frequency 2 of Motor 3

Default: 1.50

Settings 0.00–599.00 Hz

01-59 Mid-point Voltage 2 of Motor 3

Default: 5.0 / 10.0 / 26.1

Settings 115V / 230V models: 0.0–240.0 V
460V models: 0.0–480.0 V
575V models: 0.0–600.0 V

01-67 Mid-point Frequency 2 of Motor 4

Default: 1.50

Settings 0.00–599.00 Hz

01-68 Mid-point Voltage 2 of Motor 4

Default: 5.0 / 10.0 / 26.1

Settings 115V / 230V models: 0.0–240.0 V
460V models: 0.0–480.0 V
575V models: 0.0–600.0 V

01-07 Minimum Output Frequency of Motor 1

Default: 0.50

Settings 0.00–599.00 Hz

01-08 Minimum Output Voltage of Motor 1

Default: 1.0 / 2.0 / 16.7

Settings 115V / 230V models: 0.0–240.0 V
460V models: 0.0–480.0 V
575V models: 0.0–600.0 V

01-41 Minimum Output Frequency of Motor 2

Default: 0.50

Settings 0.00–599.00 Hz

01-42 Minimum Output Voltage of Motor 2

Default: 1.0 / 2.0 / 16.7

Settings 115V / 230V models: 0.0–240.0 V
460V models: 0.0–480.0 V
575V models: 0.0–600.0 V

01-60 Minimum Output Frequency of Motor 3

Default: 0.50

Settings 0.00–599.00 Hz

01-61 Minimum Output Voltage of Motor 3

Default: 1.0 / 2.0 / 16.7

Settings 115V / 230V models: 0.0–240.0 V
460V models: 0.0–480.0 V
575V models: 0.0–600.0 V

01-69 Minimum Output Frequency of Motor 4

Default: 0.50

Settings 0.00–599.00 Hz

01-70 Minimum Output Voltage of Motor 4

Default: 1.0 / 2.0 / 16.7

Settings 115V / 230V models: 0.0–240.0 V
460V models: 0.0–480.0 V
575V models: 0.0–600.0 V

- You usually set the V/F curve according to the motor's allowable loading characteristics. Pay special attention to the motor's heat dissipation, dynamic balance, and bearing lubrication when the loading characteristics exceed the loading limit of the motor.
- There is no limit for the voltage setting, but a high voltage at a low frequency may cause motor damage, overheating, and trigger the stall prevention or the over-current protection; therefore, use low voltage at low frequency to prevent motor damage or drive error.
- The diagram below shows the V/F curve for motor 1. You can use the same V/F curve for motor 2, motor 3, and motor 4. For multi-motor selections, refer to the multi-function input terminal (Pr.02-01–Pr.02-07) settings 83 and 84.

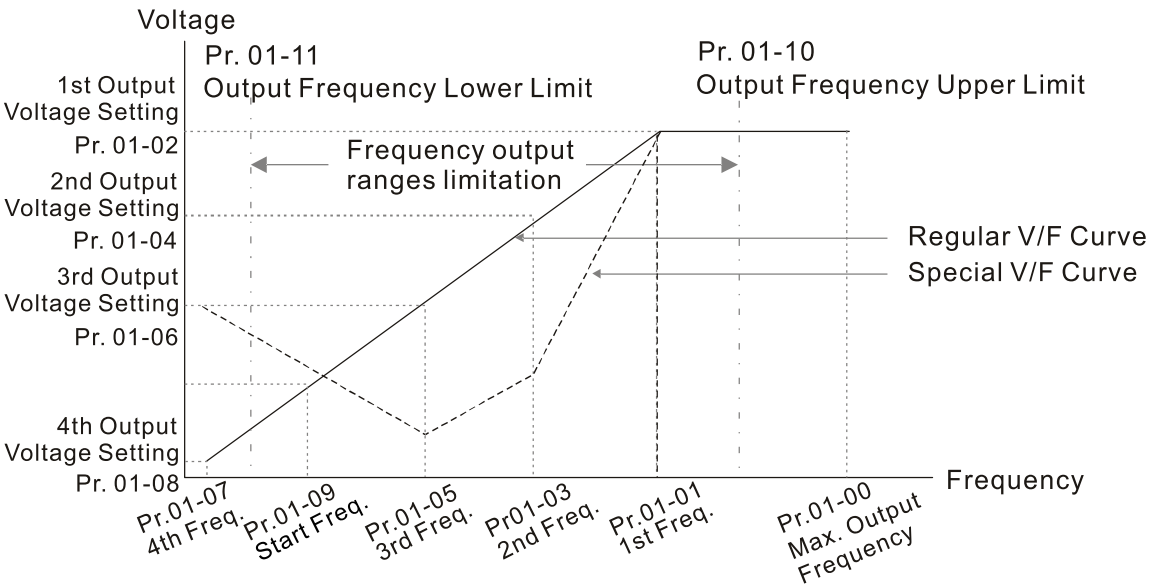

V/F Curve and The Related Parameters

Common settings for the V/F curve:

(1) General purpose

Motor spec. 60Hz

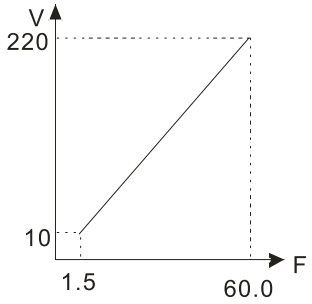

Pr.	Setting
01-00	60.0
01-01	60.0
01-02	220.0
01-03 01-05	1.50
01-04 01-06	10.0
01-07	1.50
01-08	10.0

Motor spec. 50Hz

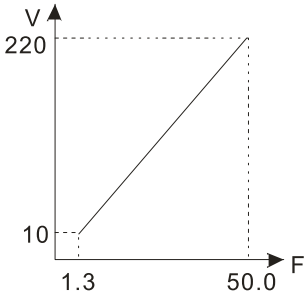

Pr.	Setting
01-00	50.0
01-01	50.0
01-02	220.0
01-03 01-05	1.30
01-04 01-06	10.0
01-07	1.30
01-08	10.0

(2) For fan and hydraulic machinery

Motor spec. 60Hz

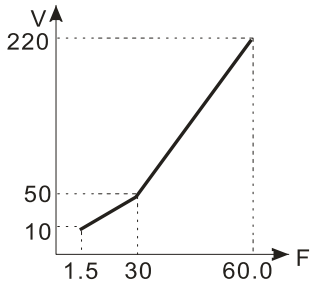

Pr.	Setting
01-00	60.0
01-01	60.0
01-02	220.0
01-03 01-05	30.0
01-04 01-06	50.0
01-07	1.50
01-08	10.0

Motor spec. 50Hz

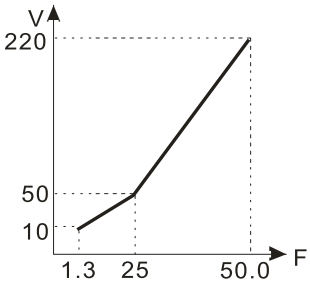

Pr.	Setting
01-00	50.0
01-01	50.0
01-02	220.0
01-03 01-05	25.0
01-04 01-06	50.0
01-07	1.30
01-08	10.0

(3) High starting torque

Motor spec. 60Hz

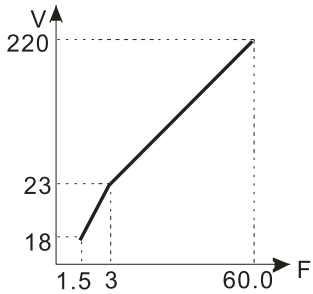

Pr.	Setting
01-00	60.0
01-01	60.0
01-02	220.0
01-03 01-05	3.00
01-04 01-06	23.0
01-07	1.50
01-08	18.0

Motor spec. 50Hz

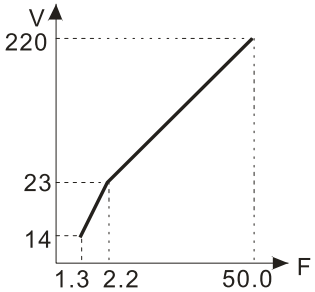

Pr.	Setting
01-00	50.0
01-01	50.0
01-02	220.0
01-03 01-05	2.20
01-04 01-06	23.0
01-07	1.30
01-08	14.0

01-09 Start-up Frequency

Default: 0.50

Settings 0.00–599.00 Hz

When the starting frequency (Pr.01-09) is larger than the Minimum Output Frequency of Motor 1 (Pr.01-07), the drive's frequency output starts when the starting frequency (Pr.01-09) reaches the F command. Refer to the following diagram for details.

Fcmd = frequency command;

Fstart = start-up frequency (Pr.01-09);

fstart = actual start-up frequency of the drive;

Fmin = 4th output frequency setting (Pr.01-07 / Pr.01-41);

Flow = output frequency lower limit (Pr.01-11)

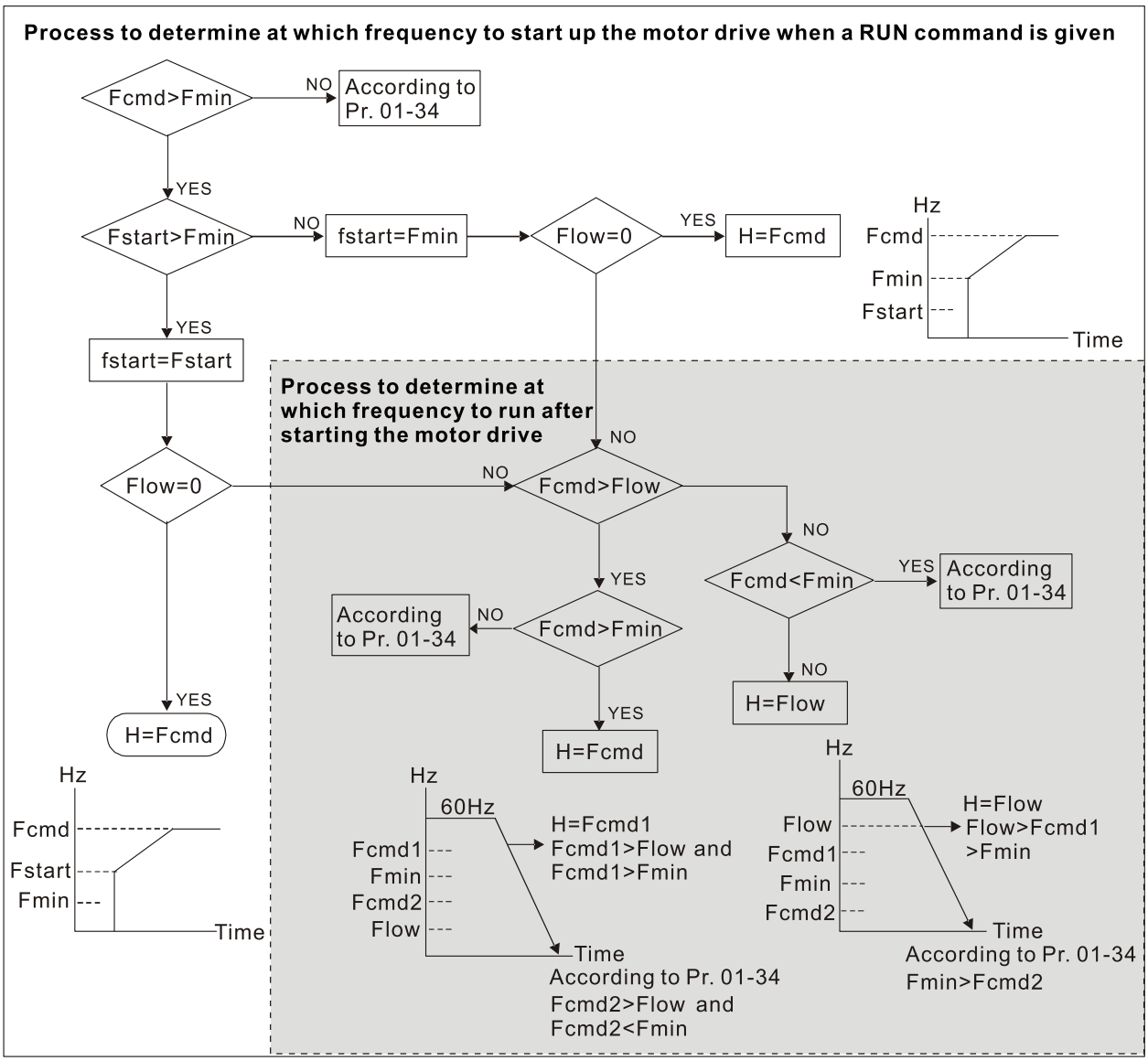

When Fcmd > Fmin and Fcmd < Fstart:

If Flow < Fcmd, the drive runs directly with Fcmd.

If Flow ≥ Fcmd, the drive runs with Fcmd, and then rises to Flow according to acceleration time.

The drive's output frequency goes directly to 0 when decelerating to Fmin.

01-10 Output Frequency Upper Limit

Default: 599.00

Settings 0.00–599.00 Hz

01-11 Output Frequency Lower Limit

Default: 0.00

Settings 0.00–599.00 Hz

If the output frequency setting is higher than the upper limit (Pr.01-10), the drive runs with the upper limit frequency. If the output frequency setting is lower than the lower limit (Pr.01-11) but higher than the minimum output frequency (Pr.01-07), the drive runs with the lower limit frequency. Set the upper limit frequency > the lower limit frequency (Pr.01-10 setting value must be > Pr.01-11 setting value).

- If the PID feedback control is enabled for the drive, the drive's output frequency may exceed the Frequency command but is still limited by this setting.
- Related parameters: Pr.01-00 Motor 1 Maximum Operation Frequency, Pr.01-11 Output Frequency Lower Limit.

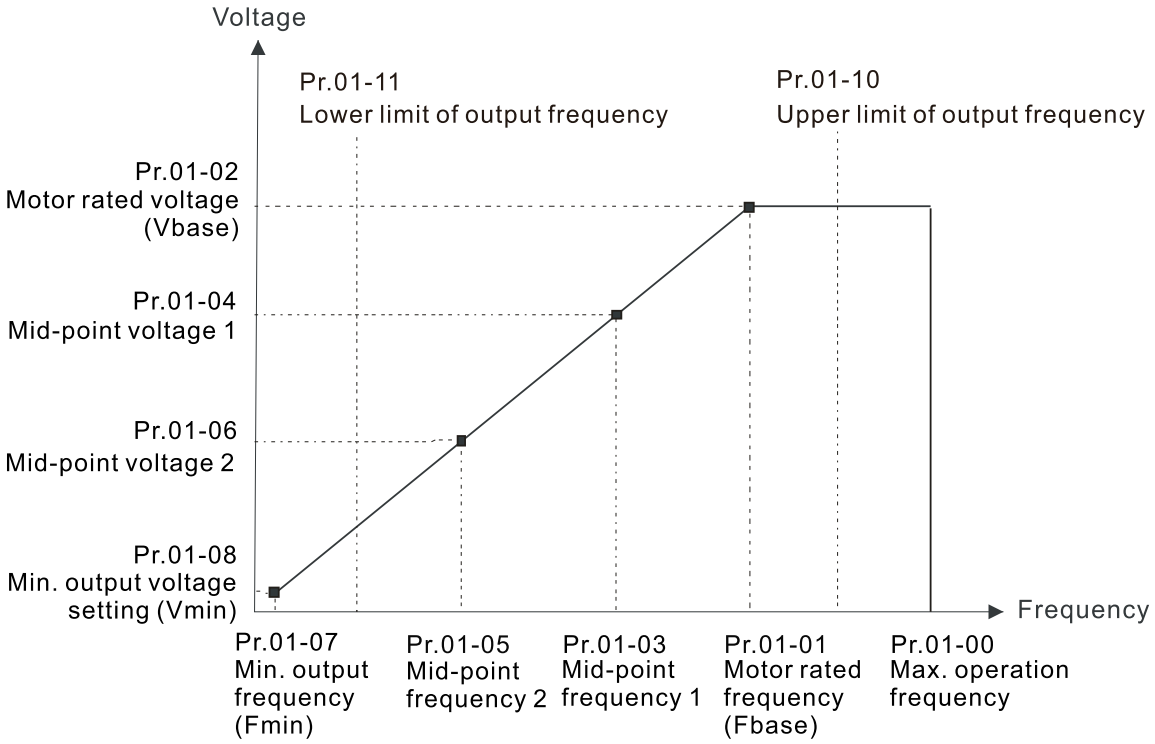

- When the drive starts, it operates according to the V/F curve and accelerates from the minimum output frequency (Pr.01-07) to the setting frequency. It is not limited by the lower output frequency settings.
- Use the frequency upper and lower limit settings to prevent operator misuse, overheating caused by the motor's operating at a too low frequency, or mechanical wear due to a too high speed.
- If the frequency upper limit setting is 50 Hz and the frequency setting is 60 Hz, the maximum output frequency is 50 Hz.
- If the frequency lower limit setting is 10 Hz and the minimum output frequency setting (Pr.01-07) is 1.5 Hz, then the drive operates at 10 Hz when the Frequency command is higher than Pr.01-07 but lower than 10 Hz. If the Frequency command is lower than Pr.01-07, the drive is in ready status without output.

01-12	Acceleration Time 1
01-13	Deceleration Time 1
01-14	Acceleration Time 2
01-15	Deceleration Time 2
01-16	Acceleration Time 3
01-17	Deceleration Time 3
01-18	Acceleration Time 4
01-19	Deceleration Time 4

01-20 JOG Acceleration Time
01-21 JOG Deceleration Time

Default: 10.00

Settings Pr.01-45 = 0: 0.00–600.00 sec.
Pr.01-45 = 1: 0.0–6000.0 sec.

- The acceleration time determines the time required for the AC motor drive to ramp from 0.00 Hz to the maximum operation frequency (Pr.01-00). The deceleration time determines the time required for the AC motor drive to decelerate from the maximum operation frequency (Pr.01-00) down to 0.00 Hz.
- The acceleration and deceleration time are invalid when using Pr.01-44 Auto-acceleration and Auto-deceleration Setting.
- Select the Acceleration/Deceleration Time 1, 2, 3, 4 with the multi-function input terminal settings. The defaults are Acceleration Time 1 and Deceleration Time 1.
- With the enabled torque limits and stall prevention functions, the actual acceleration and deceleration time are longer than the above action time.
- Note that setting the acceleration and deceleration time too short may trigger the drive's protection function (Pr.06-03 Over-current Stall Prevention during Acceleration or Pr.06-01 Over-voltage Stall Prevention), and the actual acceleration and deceleration time are longer than this setting.
- Note that setting the acceleration time too short may cause motor damage or trigger drive protection due to over-current during the drive's acceleration.
- Note that setting the deceleration time too short may cause motor damage or trigger drive protection due to over-current during the drive's deceleration or over-voltage.
- Use suitable brake resistors (refer to Chapter 07 Optional Accessories) to decelerate in a short time and prevent over-voltage.
- When you enable Pr.01-24–Pr.01-27 (S-curve acceleration and deceleration begin and arrival time), the actual acceleration and deceleration time are longer than the setting.

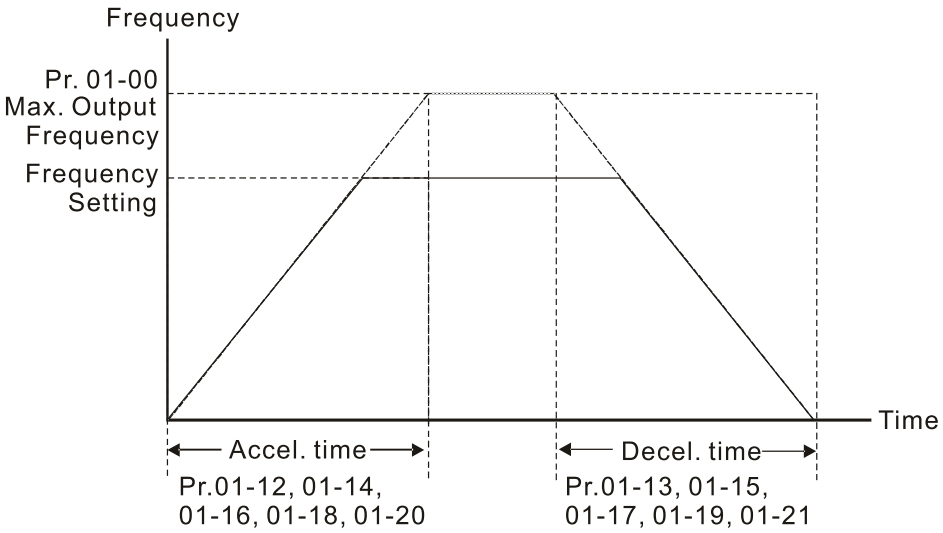

Acceleration / Deceleration Time

01-22 JOG Frequency

Default: 6.00

Settings 0.00–599.00 Hz

You can use both the external terminal JOG and F1 key on the optional keypad KPC-CC01 (optional) to set the JOG function. When the JOG command is ON, the AC motor drive accelerates from 0 Hz to the JOG frequency (Pr.01-22). When the JOG command is OFF, the AC motor drive decelerates from the JOG frequency to stop. The JOG acceleration and deceleration time (Pr.01-20, Pr.01-21) are the time to accelerate from 0.00 Hz to the JOG frequency (Pr.01-22). You cannot execute the JOG command when the AC motor drive is running. When the JOG command is executing, other operation commands are invalid.

01-23 Switch Frequency between First and Fourth Accel. /Decel.

Default: 0.00

Settings 0.00–599.00 Hz

This function does not require the external terminal switching function; it switches the acceleration and deceleration time automatically according to the Pr.01-23 setting. If you set the external terminal, the external terminal has priority over Pr.01.23.

Use this parameter to set the switch frequency between acceleration and deceleration slope. The First / Fourth Accel. / Decel. slope is calculated by the Max. Operation Frequency (Pr.01-00) / acceleration / deceleration time.

Example: When the Max. Operation Frequency (Pr.01-00) = 80 Hz, and Switch Frequency between First and Fourth Accel. / Decel. (Pr.01-23) = 40 Hz:

a. If Acceleration Time 1 (Pr.01-02) = 10 sec., Acceleration Time 4 (Pr.01-18) = 6 sec., then the acceleration time is 3 sec. for 0–40 Hz and 5 sec. for 40–80 Hz.
b. If Deceleration Time 1 (Pr.01-13) = 8 sec., Deceleration Time 4 (Pr.01-19) = 2 sec., then the deceleration time is 4 sec. for 80–40 Hz and 1 sec. for 40–0 Hz.

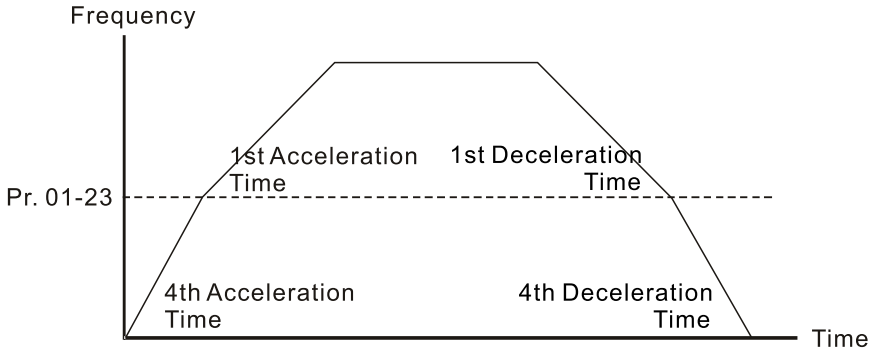

1st/4th Acceleration/Deceleration Frequency Switching

01-24 S-curve for Acceleration Begin Time 1
01-25 S-curve for Acceleration Arrival Time 2
01-26 S-curve for Deceleration Begin Time 1
01-27 S-curve for Deceleration Arrival Time 2

Default: 0.20

Settings Pr.01-45 = 0: 0.00–25.00 sec.
Pr.01-45 = 1: 0.0–250.0 sec.

- Using an S-curve gives the smoothest transition between speed changes. The acceleration and deceleration curve adjusts the acceleration and deceleration S-curve. When enabled, the drive produces a different acceleration and deceleration curve according to the acceleration and deceleration time.
- The S-curve function is invalid when you set the acceleration and deceleration time to 0.
- When Pr.01-12, 01-14, 01-16, 01-18 ≥ Pr.01-24 and Pr.01-25,
  the actual acceleration time = Pr.01-12, 01-14, 01-16, 01-18 + (Pr.01-24 + Pr.01-25) ÷ 2.
- When Pr.01-13, 01-15, 01-17, 01-19 ≥ Pr.01-26 and Pr.01-27,
  the actual deceleration time = Pr.01-13, 01-15, 01-17, 01-19 + (Pr.01-26 + Pr.01-27) ÷ 2.

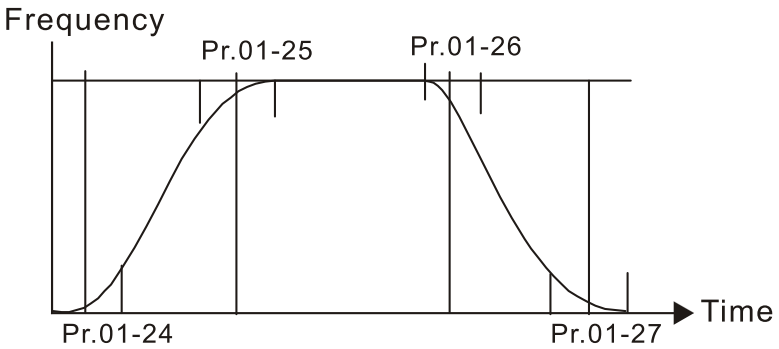

01-28	Skip Frequency 1 (Upper Limit)
01-29	Skip Frequency 1 (Lower Limit)
01-30	Skip Frequency 2 (Upper Limit)
01-31	Skip Frequency 2 (Lower Limit)
01-32	Skip Frequency 3 (Upper Limit)
01-33	Skip Frequency 3 (Lower Limit)

Default: 0.00

Settings 0.00–599.00 Hz

- Sets the AC motor drive's skip frequency. The drive's frequency setting skips these frequency ranges. However, the frequency output is continuous. There are no limits for these six parameters and you can combine them. Pr.01-28 does not need to be greater than Pr.01-29; Pr.01-30 does not need to be greater than Pr.01-31; Pr.01-32 does not need to be greater than Pr.01-33. You can set Pr.01-28–01-33 as you required. There is no size distinction among these six parameters.
- These parameters set the skip frequency ranges for the AC motor drive. You can use this function to avoid frequencies that cause mechanical resonance. The skip frequencies are useful when a motor has resonance vibration at a specific frequency bandwidth. Skipping this frequency avoids the vibration. There are three frequency skip zones available.
- You can set the Frequency command (F) within the range of skip frequencies. Then the output frequency (H) is limited to the lower limit of skip frequency ranges.
- During acceleration and deceleration, the output frequency still passes through the skip frequency ranges.

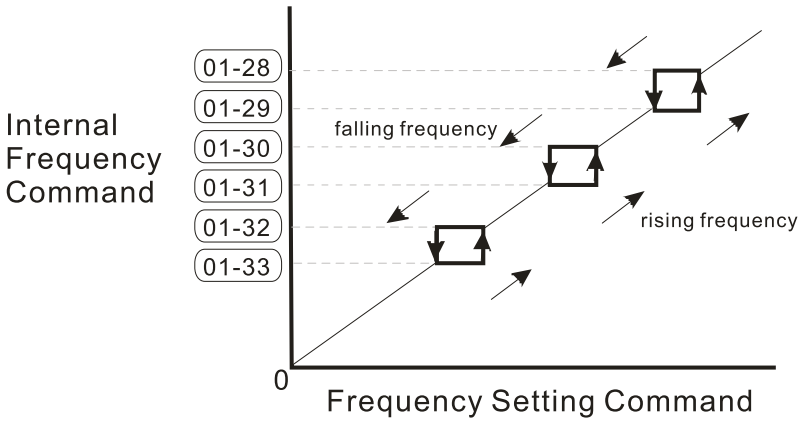

01-34 Zero-speed Mode

Default: 0

Settings 0: Output waiting
1: Zero-speed operation
2: Fmin (refer to Pr.01-07, Pr.01-41)

- When the drive's Frequency command is lower than Fmin (Pr.01-07 and Pr.01-41), the drive operates according to this parameter.
- 0: the AC motor drive is in waiting mode without voltage output from terminals U, V, W.
- 1: the drive executes the DC brake by Vmin (Pr.01-08 and Pr.01-42) in V/F, FOC sensorless, and SVC modes. And it executes zero-speed operation in VFPG mode.
- 2: the AC motor drive runs using Fmin (Pr.01-07 and Pr.01-41) and Vmin (Pr.01-08 and Pr.01-42) in V/F, VFPG, SVC and FOC sensorless modes.

  In V/F, VFPG, SVC and FOC sensorless modes:

  Pr.01-11 lower limit > Pr.01-07 Fmin

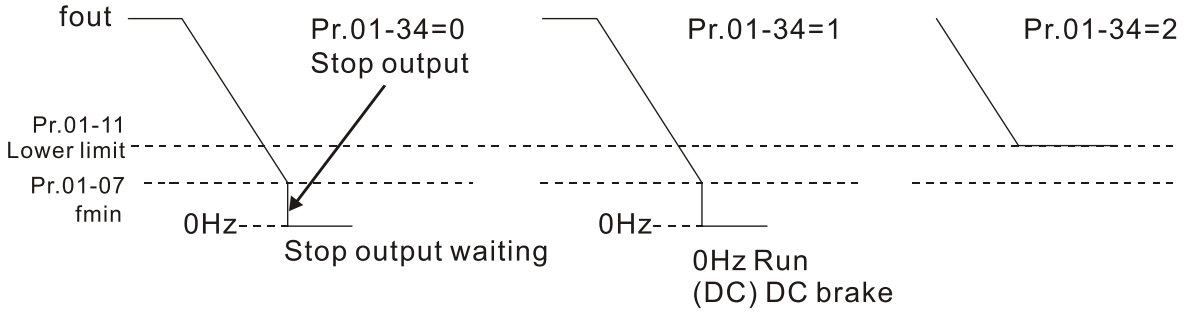

  Pr.01-11 lower limit < Pr.01-07 Fmin

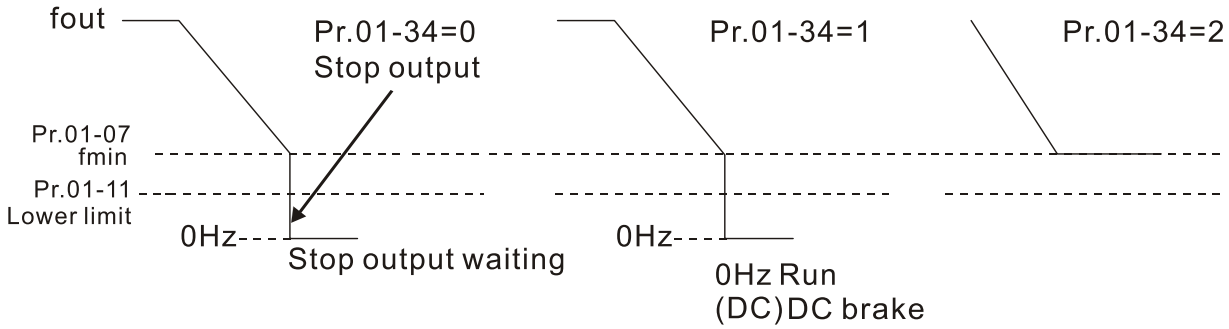

01-43 V/F Curve Selection

Default: 0

Settings 0: V/F curve determined by Pr.01-00–01-08
1: V/F curve to the power of 1.5
2: V/F curve to the power of 2

- When setting to 0, refer to Pr.01-01–01-08 for the motor 1 V/F curve. For motor 2, refer to Pr.01-35–01-42.
- When setting to 1 or 2, the second and third voltage frequency settings are invalid.
- If the load of the motor is a variable torque load (torque is in direct proportion to the rotating speed, such as the load of a fan or a pump), the load torque is low at low rotating speed. You can decrease the input voltage appropriately to make the magnetic field of the input current smaller and reduce flux loss and iron loss for the motor to increase efficiency.

- When you set the V/F curve to high power, it has lower torque at low frequency, and the drive is not suitable for rapid acceleration and deceleration. Do NOT use this parameter for rapid acceleration and deceleration.

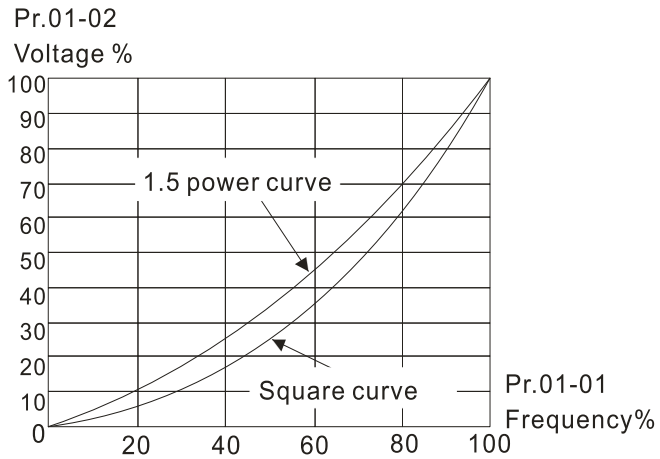

01-44 Auto-Acceleration and Auto-Deceleration Setting

Default: 0

Settings 0: Linear acceleration and deceleration
1: Auto-acceleration and linear deceleration
2: Linear acceleration and auto-deceleration
3: Auto-acceleration and auto-deceleration
4: Stall prevention by auto-acceleration and auto-deceleration (limited by Pr.01-12–01-21)

- 0 (linear acceleration and deceleration): the drive accelerates and decelerates according to the setting for Pr.01-12–01-19.
- 1 or 2 (auto/linear acceleration and auto/linear deceleration): the drive auto-tunes the acceleration and deceleration to effectively reduce the mechanical vibration during the load start-up and stop and make the auto-tuning process easier. It does not stall during acceleration and does not need a brake resistor during deceleration to stop. It can also improve operation efficiency and save energy.

3 (auto-acceleration and auto-deceleration–decelerating by the actual load): the drive auto-detects the load torque and automatically accelerates from the fastest acceleration time and smoothest start-up current to the setting frequency. During deceleration, the drive automatically determines the loaded regenerative energy to steadily and smoothly stop the motor in the fastest deceleration time.

4 (stall prevention by auto-acceleration and deceleration–reference to the acceleration and deceleration time settings): if the acceleration and deceleration time are within a reasonable range, the actual acceleration and deceleration time refer to the Pr.01-12–01-19 settings. If the acceleration and deceleration time are too short, the actual acceleration and deceleration time are greater than the acceleration and deceleration time settings.

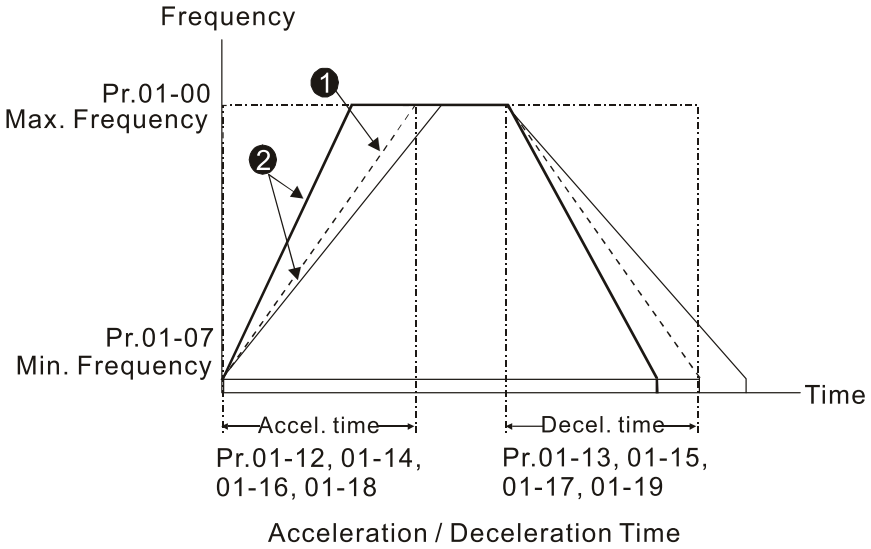

❶ Optimize the acceleration / deceleration time when Pr.01-44 is set to 0.
❷ Optimize the acceleration / deceleration time which load needs actually when Pr.01-44 is set to 3.

01-45 Time Unit for Acceleration and Deceleration and S-Curve

Default: 0

Settings 0: Unit 0.01 sec.
1: Unit 0.1 sec.

01-46 CANopen Quick Stop Time

Default: 1.00

Settings Pr.01-45 = 0: 0.00–600.00 sec.
Pr.01-45 = 1: 0.0–6000.0 sec.

Sets the time required to decelerate from the maximum operation frequency (Pr.01-00) to 0.00 Hz through the CANopen control.

01-49 Regenerative Energy Restriction Control Method

Default: 0

Settings 0: Normal deceleration
1: Over voltage energy restriction
2: Traction energy control (TEC)

0: decelerate or stop in accordance with the original deceleration setting.

- The actual deceleration time of the motor is longer than the deceleration time setting because of the over-voltage stall prevention.
- 1: during deceleration, the drive controls the motor according to the setting for Pr.06-01 and the recovery voltage of the DC bus. The controller starts when the DC bus voltage reaches 95% of Pr.06-01. When Pr.06-01 is set to 0, the drive controls the motor according to the operating voltage and the recovery voltage of the DC bus. This method decelerates according to the setting for the deceleration time. The fastest actual deceleration time is not less than the deceleration time setting.
- 2: during deceleration, the drive controls the motor according to the setting for Pr.06-01 and the DC bus voltage. The controller starts when the DC bus voltage reaches 95% of Pr.06-01, auto-tunes the output frequency and the output voltage to accelerate the consumption of the regenerative energy according to the drive's capability, and the deceleration time is the result of the drive's auto-tuning. Use this setting when over-voltage occurs due to unexpected deceleration time.

02 Digital Input / Output Parameters

You can set this parameter during operation.

02-00 Two-wire / Three-wire Operation Control

Default: 1

Settings
0: No function
1: Two-wire mode 1, power on for operation control
(M1: FWD / STOP, M2: REV / STOP)
2: Two-wire mode 2, power on for operation control
(M1: RUN / STOP, M2: REV / FWD)
3: Three-wire, power on for operation control
(M1: RUN, M2: REV / FWD, M3: STOP)
4: Two-wire mode 1, Quick Start
(M1: FWD / STOP, M2: REV / STOP)
5: Two-wire mode 2, Quick Start
(M1: RUN / STOP, M2: REV / FWD)
6: Three-wire, Quick Start
(M1: RUN, M2: REV / FWD, M3: STOP)

- In the Quick Start function, the output remains ready for operation. The drive responds to the Start command immediately.
- When using Quick Start function, the output terminals UVW are with driving voltages in order to output and respond immediately if a Start command is given. Do NOT touch the terminals or modify the motor wiring to prevent electric shocks.
- This parameter sets the configuration of the external drive operation control and the Quick Start function. There are six different control modes listed in the following table.

Pr.02-00	External Terminal Control Circuits
Setting value: 1 Two-wire operation control FWD / STOP REV / STOP	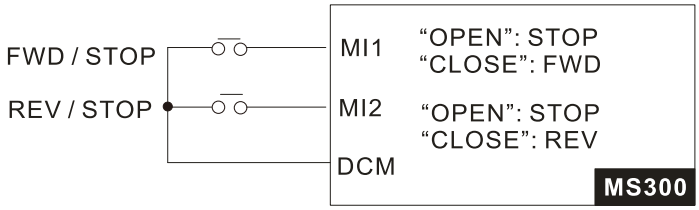
Setting value: 2 Two-wire operation control RUN / STOP FWD / REV	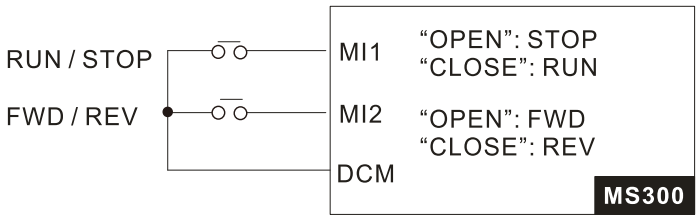
Setting value: 3 Three-wire operation control	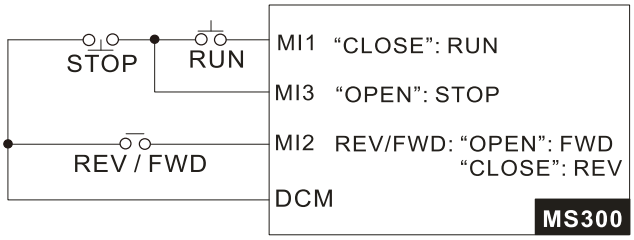

Pr.02-00	External Terminal Control Circuits
Setting value: 4 Two-wire operation control Quick Start	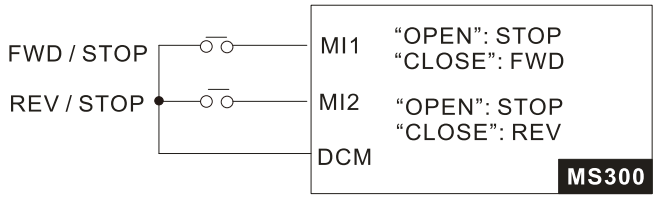
Setting value: 5 Two-wire operation control Quick Start	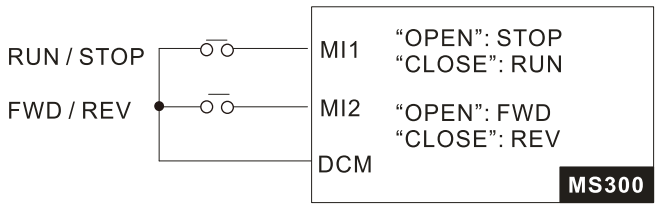
Setting value: 6 Three-wire operation control Quick Start	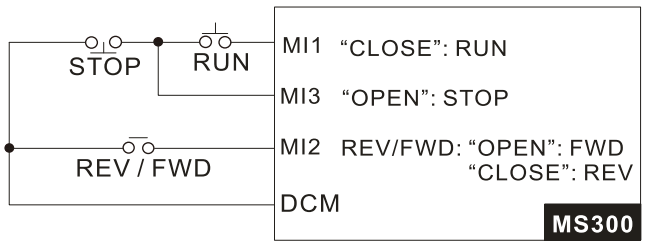

02-01 Multi-Function Input Command 1 (MI1)
02-02 Multi-Function Input Command 2 (MI2)
02-07 Multi-Function Input Command 7 (MI7)

Default: 0

02-03 Multi-Function Input Command 3 (MI3)

Default: 1

02-04 Multi-Function Input Command 4 (MI4)

Default: 2

02-05 Multi-Function Input Command 5 (MI5)

Default: 3

02-06 Multi-Function Input Command 6 (MI6)

Default: 4

Settings

0: No function

1: Multi-step speed command 1

2: Multi-step speed command 2

3: Multi-step speed command 3

4: Multi-step speed command 4

5: Reset

6: JOG operation [by external control or KPC-CC01 (optional)]

7: Acceleration / deceleration speed inhibit

8: The first and second acceleration / deceleration time selection

9: The third and fourth acceleration / deceleration time selection

10: External Fault (EF) input (Pr.07-20)

11: Base Block (B.B.) input from external

12: Output stop

13: Cancel the setting of auto-acceleration / auto-deceleration time
15: Rotating speed command from AVI
16: Rotating speed command from ACI
18: Force to stop (Pr.07-20)
19: Digital up command
20: Digital down command
21: PID function disabled
22: Clear the counter
23: Input the counter value (MI6)
24: FWD JOG command
25: REV JOG command
26: TQC / FOC mode selection
27: ASR1 / ASR2 selection
28: Emergency stop (EF1)
29: Signal confirmation for Y-connection
30: Signal confirmation for Δ-connection
31: High torque bias (Pr.11-30)
32: Middle torque bias (Pr.11-31)
33: Low torque bias (Pr.11-32)
38: Disable writing EEPROM function
39: Torque command direction
40: Force coasting to stop
41: HAND switch
42: AUTO switch
48: Mechanical gear ratio switch
49: Enable drive
50: Slave dEb action to execute
51: Selection for PLC mode bit 0
52: Selection for PLC mode bit 1
53: Trigger CANopen quick stop
56: Local / Remote selection
58: Enable fire mode (with RUN command)
59: Enable fire mode (without RUN command)
70: Force auxiliary frequency return to 0
71: Disable PID function, force PID output return to 0
72: Disable PID function, retain the output value before disabled
73: Force PID integral gain return to 0, disable integral
74: Reverse PID feedback
81: Simple positioning zero point position signal input
82: OOB loading balance detection
83: Multi-motor (IM) selection bit 0
84: Multi-motor (IM) selection bit 1

- This parameter selects the functions for each multi-function terminal.
- When Pr.02-00 = 0, you can set multi-function options with multi-function input terminals MI1, MI2.
- When Pr.02-00 ≠ 0, the multi-function input terminals MI1, MI2 work in accordance with the setting values for Pr.02-00.

  Example:

  If Pr.02-00 = 1: multi-function input terminal MI1 = FWD / STOP, MI2 = REV / STOP.

  If Pr.02-00 = 2: multi-function input terminal MI1 = RUN / STOP, MI2 = FWD / REV.
- When multi-function input terminal MI7 = 0, MI7 is designated as a pulse input terminal.
- If Pr.02-00 is set to three-wire operation control, terminal MI3 is for the STOP contact.

  The function set previously for this terminal is automatically invalid.
- Summary of Function Settings

  Take the normally open contact (N.O.) for example, ON: contact is closed, OFF: contact is open.

Settings	Functions	Descriptions
0	No function	
1	Multi-step speed command 1	You can set 15 steps of speed with the digital status of these four terminals. You can use 16-steps of speed if you include the master speed (refer to Parameter Group 04 Multi-step Speed Parameters).
2	Multi-step speed command 2	
3	Multi-step speed command 3	
4	Multi-step speed command 4	
5	Reset	Use this terminal to reset the drive after clearing a drive fault.
6	JOG operation	This function is valid when the source of the operation command is the external terminals. The JOG operation executes when the drive stops completely. While running, you can still change the operation direction, and the STOP key on the keypad* and the STOP command from communications are valid. Once the external terminal receives the OFF command, the motor stops in the JOG deceleration time. Refer to Pr.01-20–01-22 for details. *: This function is valid when Pr.00-32 is set to 1. 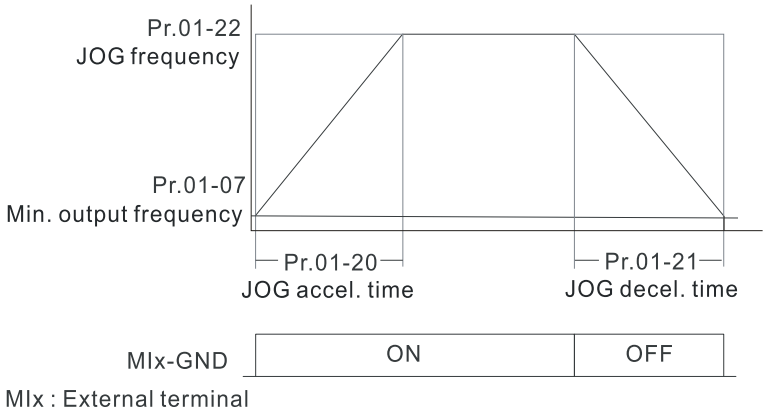

Settings	Functions	Descriptions
7	Acceleration / deceleration speed inhibit	When you enable this function, the drive stops acceleration or deceleration immediately. After you disable this function, the AC motor drive starts to accelerate or decelerate from the inhibit point. 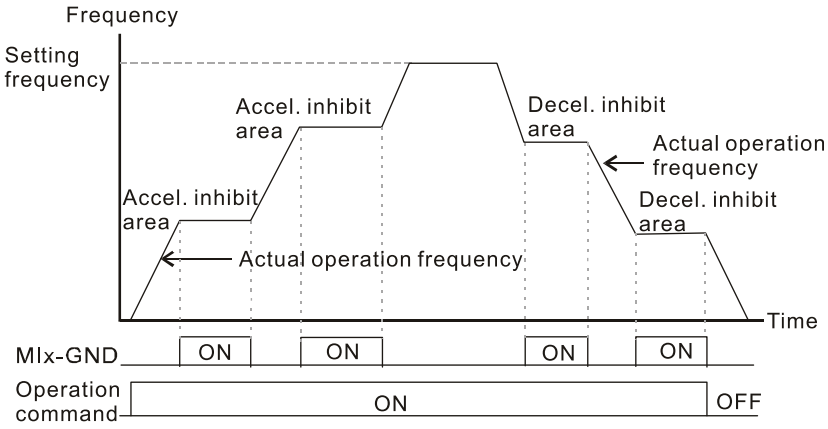
8	The first and second acceleration / deceleration time selection	You can select the acceleration and deceleration time of the drive with this function, or from the digital status of the terminals; there are four acceleration and deceleration selections.
9	The third and fourth acceleration / deceleration time selection	
10	External Fault (EF) input (Pr.07-20)	For external fault input. The drive decelerates according to the Pr.07-20 setting, and the keypad shows “EF” (it shows the fault record when an external fault occurs). The drive keeps running until the fault is cleared (terminal status restored) after RESET.
11	Base Block (B.B.) input from external	ON: the output of the drive stops immediately. The motor is in free run and the keypad displays the B.B. signal. Refer to Pr.07-08 for details.
12	Output stop	ON: the output of the drive stops immediately and the motor is in free run status. The drive is in output waiting status until the switch is turned to OFF, and then the drive restarts and runs to the current setting frequency. 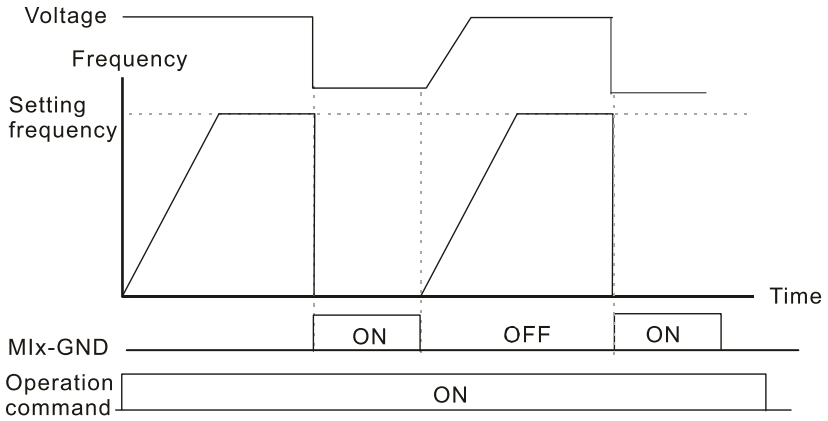

Settings	Functions	Descriptions
13	Cancel the setting of auto-acceleration / auto-deceleration time	Set Pr.01-44 to one of the 01–04 setting modes before using this function. When this function is enabled, OFF is for auto mode and ON is for linear acceleration / deceleration.
15	Rotating speed command from AVI	ON: force the source of the drive's frequency to be AVI. If the rotating speed commands are set to AVI and ACI at the same time, the priority is AVI > ACI.
16	Rotating speed command from ACI	ON: force the source of the drive's frequency to be ACI. If the rotating speed commands are set to AVI and ACI at the same time, the priority is AVI > ACI.
18	Force to stop (Pr.07-20)	ON: the drive ramps to a stop according to the Pr.07-20 setting.
19	Frequency up command	ON: the frequency of the drive increases or decreases by one unit. If this function remains ON continuously, the frequency increases or decreases according to Pr.02-09 / Pr.02-10. The Frequency command returns to zero when the drive stops and the displayed frequency is 0.00 Hz. If you select Pr.11-00, bit 7 = 1, the frequency is not saved.
20	Frequency down command	
21	PID function disabled	ON: the PID function is disabled.
22	Clear the counter	ON: the current counter value is cleared and displays 0. The drive counts up when this function is disabled.
23	Input the counter value (MI6)	ON: the counter value increases by one. Use the function with Pr.02-19.
24	FWD JOG command	This function is valid when the source of the operation command is the external terminal. ON: the drive executes forward JOG. When executing the JOG command in torque mode, the drive automatically switches to speed mode. The drive returns to torque mode after the JOG command is complete.
25	REV JOG command	This function is valid when the source of the operation command is the external terminal. ON: the drive executes reverse JOG. When executing the JOG command in torque mode, the drive automatically switches to speed mode. The drive returns to torque mode after the JOG command is complete.

Settings	Functions	Descriptions
26	TQC / FOC mode selection	ON: TQC mode, OFF: FOC mode. 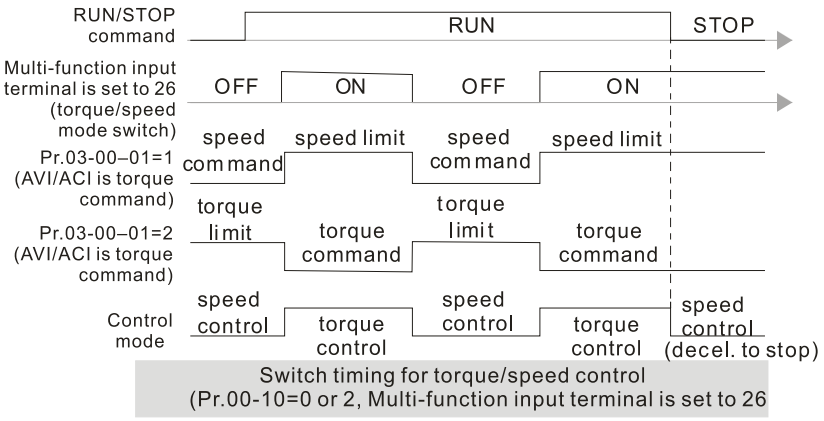
27	ASR1 / ASR2 selection	ON: the speed is adjusted by the ASR 2 setting. OFF: the speed is adjusted by the ASR 1 setting. Refer to Pr.11-02 for details.
28	Emergency stop (EF1)	ON: the output of the drive stops immediately, displays “EF1” on the keypad, and the motor is in free run status. The drive keeps running until the external fault is cleared after you press RESET on the keypad (EF: External Fault). 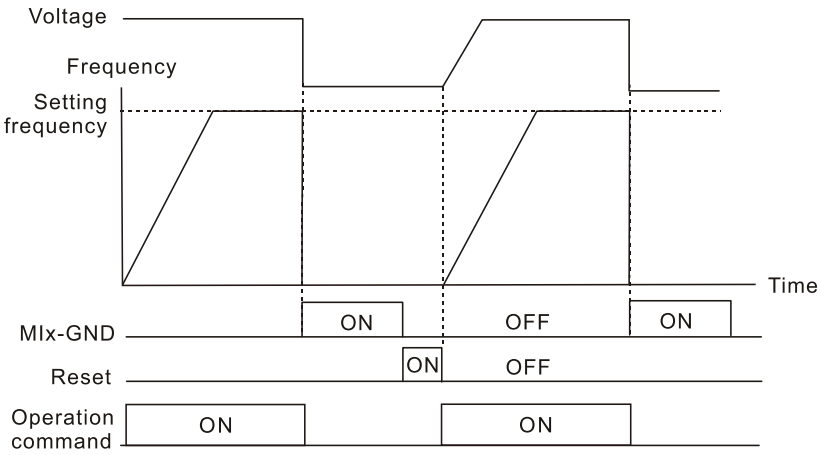
29	Signal confirmation for Y-connection	When the control mode is V/F, ON: the drive operates by the first V/F.
30	Signal confirmation for Δ-connection	When the control mode is V/F, ON: the drive operates by the second V/F.
31	High torque bias	Refer to Pr.11-30–11-32 for details.
32	Middle torque bias	
33	Low torque bias	
38	Disable writing EEPROM function (parameters memory disable)	ON: writing to EEPROM is disabled. Changed parameters are not saved after power off.
39	Torque command direction	For torque control (Pr.00-10 = 2), when the torque command is AVI or ACI, ON: negative torque.

<table>
<tr><th>Settings</th><th>Functions</th><th>Descriptions</th></tr>
<tr><td>40</td><td>Force coasting to stop</td><td>ON: during operation, the motor coasts to stop.</td></tr>
<tr><td>41</td><td>HAND switch</td><td rowspan="2">1. When the MI terminal switches to OFF, it executes a STOP command. Therefore, if the MI terminal switches to OFF during operation, the drive stops.
2. Use the optional keypad KPC-CC01 to switch between HAND and AUTO. The drive stops first, and then switches to HAND or AUTO status.
3. The optional digital keypad KPC-CC01 displays the current status of the drive (HAND / OFF / AUTO).
<table>
<tr><th></th><th>bit 1</th><th>bit 0</th></tr>
<tr><td>OFF</td><td>0</td><td>0</td></tr>
<tr><td>AUTO</td><td>0</td><td>1</td></tr>
<tr><td>HAND</td><td>1</td><td>0</td></tr>
<tr><td>OFF</td><td>1</td><td>1</td></tr>
</table></td></tr>
<tr><td>42</td><td>AUTO switch</td></tr>
<tr><td>48</td><td>Mechanical gear ratio switch</td><td>ON: the mechanical gear ratio switches to the second group. Refer to Pr.10-04–Pr.10-07 for details.</td></tr>
<tr><td>49</td><td>Enable drive</td><td>When the drive is enabled, the RUN command is valid.
When the drive is disabled, the RUN command is invalid.
When the drive is operating, the motor coasts to stop.
This function varies with MO = 45.</td></tr>
<tr><td>50</td><td>Slave dEb action to execute</td><td>Enter the message setting in this parameter when the master triggers dEb. This ensures that the slave also triggers dEb, then the master and slave stop simultaneously.</td></tr>
<tr><td>51</td><td>Selection for PLC mode (bit 0)</td><td rowspan="2">
<table>
<tr><th>PLC status</th><th>bit 1</th><th>bit 0</th></tr>
<tr><td>Disable PLC function (PLC 0)</td><td>0</td><td>0</td></tr>
<tr><td>Trigger PLC to operate (PLC 1)</td><td>0</td><td>1</td></tr>
<tr><td>Trigger PLC to stop (PLC 2)</td><td>1</td><td>0</td></tr>
<tr><td>No function</td><td>1</td><td>1</td></tr>
</table></td></tr>
<tr><td>52</td><td>Selection for PLC mode (bit 1)</td></tr>
<tr><td>53</td><td>Trigger CANopen quick stop</td><td>When this function is enabled under CANopen control, it changes to Quick Stop. Refer to Chapter 15 CANopen Overview for more details.</td></tr>
<tr><td>56</td><td>Local / Remote selection</td><td>Use Pr.00-29 to select LOCAL / REMOTE mode. When Pr.00-29 is not set to 0, the optional digital keypad KPC-CC01 displays LOC / REM status. (Refer to Pr.00-29 for details)
<table>
<tr><th></th><th>bit 0</th></tr>
<tr><td>REM</td><td>0</td></tr>
<tr><td>LOC</td><td>1</td></tr>
</table></td></tr>
</table>

Settings	Functions	Descriptions
58	Enable fire mode (with RUN command)	When fire occurs, enable this terminal to make the drive enter the fire mode to force the drive to run. If the drive is in stop status, enable this terminal to make the drive enter the fire mode to force the drive to run according to Pr.06-80 settings. (Refer to Pr.06-80, 06-81, 06-88 for details)
59	Enable fire mode (without RUN command)	When fire occurs, enable this terminal to make the drive enter the fire mode. If the drive is in stop status, enable this terminal to make the drive enter the fire mode, but the drive does not run. If the drive is in running status, enable this terminal to run the drive according to Pr.06-80 settings. (Refer to Pr.06-80, 06-81, 06-88 for details)
70	Force auxiliary frequency return to 0	Forces the auxiliary frequency return to 0 when using this function. PID keeps operating if PID is the master frequency. When Pr.00-35 ≠ 0, the master and auxiliary frequencies are enabled, and then selecting this function with the terminal effectively forces the auxiliary frequency return to 0.
71	Disable PID function, force PID output return to 0	When the master and auxiliary frequencies are enabled and when using the PID function, ON: PID does not operate, returns the integral value to 0, and forces the PID output return to 0.
72	Disable PID function, retain the output value before disabled	When the master and auxiliary frequencies are enabled, and the PID function is enabled, ON: PID does not operate, and its output value remains the same as the value before it was disabled.
73	Force PID integral gain return to 0, disable integral	ON: PID continues to operate, disables the integral control, and returns the integral value to 0.
74	Reverse PID feedback	ON: PID negative feedback becomes positive feedback, or PID positive feedback becomes negative feedback.
81	Simple positioning zero point position signal input	Use this function as the trigger terminal for simple positioning with Pr.02-78–Pr.02-80. This function is just a simple positioning, so you must verify the positioning accuracy. Refer to Pr.02-80 for details.
82	OOB loading balance detection	You can use the OOB (Out of Balance Detection) function with the PLC program in the washing machine system. ON: it receives the Δθ value according to Pr.07-46 (OOB Sampling Time) and Pr.07-47 (Number of OOB Sampling Times). The PLC or the host controller determines the motor's speed according to this Δθ value (Pr.07-48).

<table>
<tr><th>Settings</th><th>Functions</th><th>Descriptions</th></tr>
<tr><td>83</td><td>Multi-motor (IM) selection bit 0</td><td rowspan="2">ON: parameters can be changed
Example: MI1 = 83, MI2 = 84
<table>
<tr><th rowspan="2">MI1</th><th rowspan="2">MI2</th><th rowspan="2">Motor Selection</th><th colspan="2">Related Motor Parameter</th></tr>
<tr><th>Max. Operation Frequency</th><th>V/F Curve Parameters</th></tr>
<tr><td>OFF</td><td>OFF</td><td>Motor 1</td><td>Pr.01-00</td><td>Pr.01-01–01-08</td></tr>
<tr><td>ON</td><td>OFF</td><td>Motor 2</td><td>Pr.01-52</td><td>Pr.01-35–01-42</td></tr>
<tr><td>OFF</td><td>ON</td><td>Motor 3</td><td>Pr.01-53</td><td>Pr.01-54–01-61</td></tr>
<tr><td>ON</td><td>ON</td><td>Motor 4</td><td>Pr.01-62</td><td>Pr.01-63–01-70</td></tr>
</table></td></tr>
<tr><td>84</td><td>Multi-motor (IM) selection bit 1</td></tr>
</table>

02-09 External UP / DOWN Key Mode

Default: 0

Settings 0: By the acceleration / deceleration time
1: Constant speed (Pr.02-10)
2: Pulse signal (Pr.02-10)
3: Curve
4: Steps (Pr.02-10)

02-10 Acceleration / Deceleration Speed of External UP / DOWN Key

Default: 0.001

Settings 0.001–1.000 Hz / ms

- Use when the multi-function input terminals are set to 19, 20 (Digital UP / DOWN command). The frequency increases or decreases according to Pr.02-09 and Pr.02-10.
- When Pr.11-00 bit 7 = 1, the frequency is not saved. The Frequency command returns to zero when the drive stops, and the displayed frequency is 0.00 Hz. At this time, increasing or decreasing the Frequency command (F) by using the UP or DOWN key is valid only when the drive is running.
- When Pr.02-09 is set to 0:
  The increasing or decreasing Frequency command (F) operates according to the setting for acceleration or deceleration time (refer to Pr.01-12–01-19).

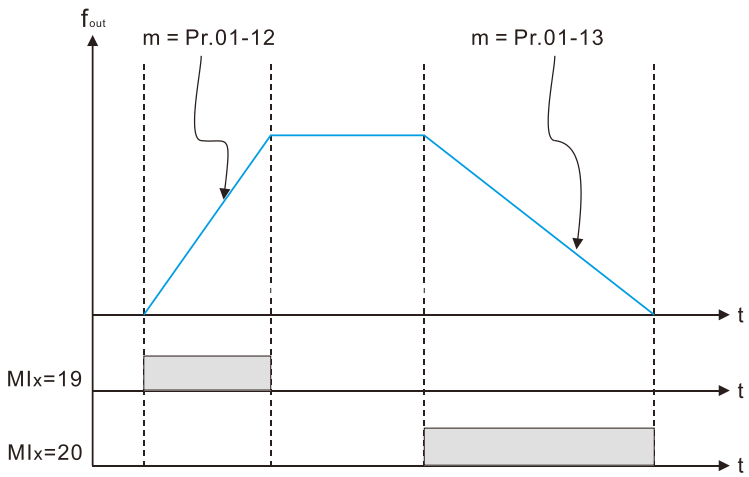

When Pr.02-09 is set to 1:

The increasing or decreasing Frequency command (F) operates according to the setting of Pr.02-10 (0.001–1.000 Hz/ms).

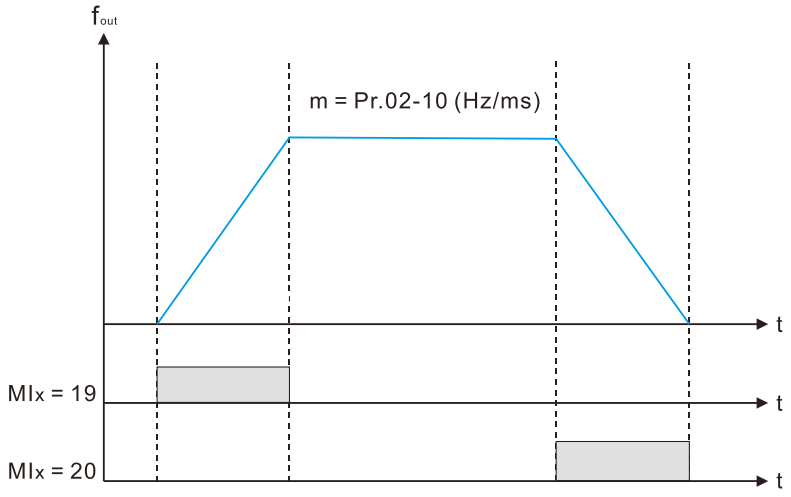

When Pr.02-09 is set to 2:

The increasing / decreasing frequency command (F) operates according to the pulse of Pr.02-10.

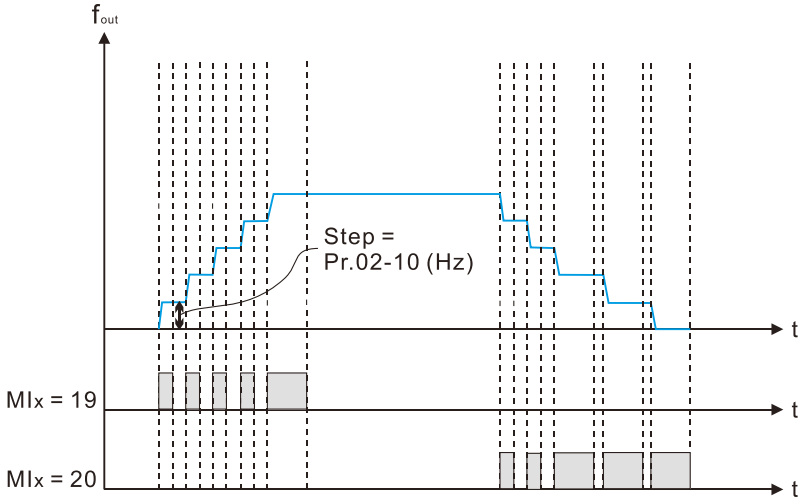

When Pr.02-09 is set to 3:

The increasing / decreasing frequency command (F) operates according to the exponential curve.

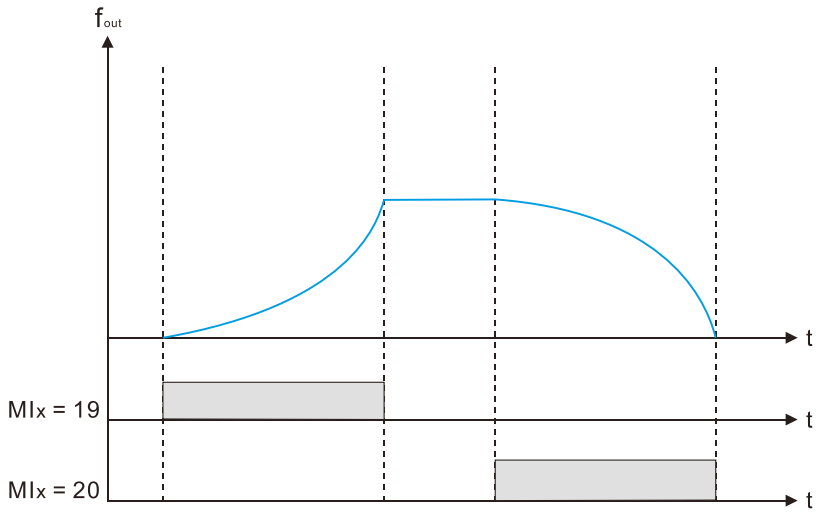

When Pr.02-09 is set to 4:

The tiered increasing or decreasing Frequency command (F) operates according to the setting of Pr.02-10 per very 100 ms.

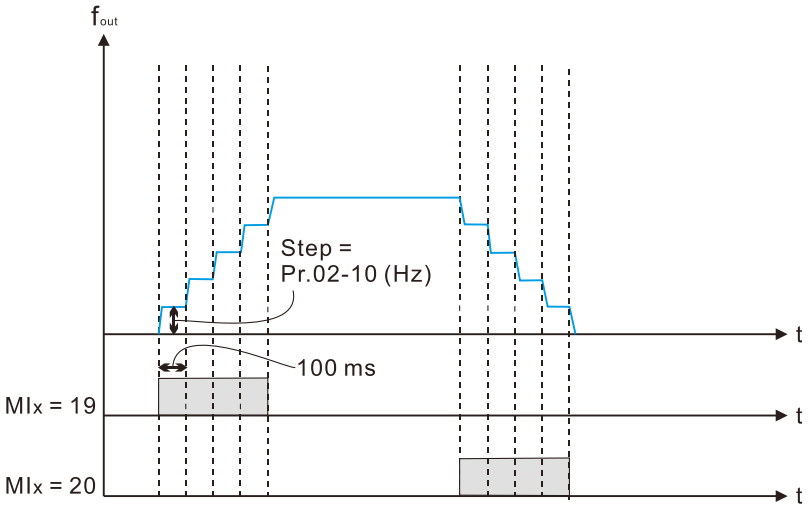

02-11 Multi-Function Input Response Time

Default: 0.005

Settings 0.000–30.000 sec.

Use this parameter to set the response time of the digital input terminals MI1–MI7.

This function is to delay and confirm the digital input terminal signal. The time for delay is also the time for confirmation. The confirmation prevents interference that could cause error in the input to the digital terminals. In the meanwhile, it delays the response time though confirmation improves accuracy.

02-12 Multi-Function Input Mode Selection

Default: 0

Settings 0–65535

The parameter setting is in decimal.

This parameter sets the status of the multi-function input signal (0: normally open; 1: normally closed) and it is not affected by the status of SINK / SOURCE.

bit 0–bit 6 correspond to MI1–MI7.

The default for bit 0 (MI1) is FWD terminal, and the default for bit 1 (MI2) is REV terminal. If the MI1 and MI2 are not used as two-wire / three-wire control method, set Pr.02-00 = 0. Then set this parameter according to the functional requirements of terminals MI1 and MI2 (referring to Pr.02-01 and Pr.02-02).

You can change the terminal ON / OFF status through communications.

For example: MI3 is set to 1 (multi-step speed command 1) and MI4 is set to 2 (multi-step speed command 2). Then the forward + second step speed command = $1001_2 = 9_{10}$.

As long as Pr.02-12 = 9 is set through communications, there is no need to wire any multi-function terminal to run forward with the second step speed.

bit 6	bit 5	bit 4	bit 3	bit 2	bit 1	bit 0
MI7	MI6	MI5	MI4	MI3	MI2	MI1

Use Pr.11-42 bit 1 to select whether FWD / REV terminal is controlled by Pr.02-12 bit 0 and bit 1.

02-13 Multi-Function Output 1 (RY1)

Default: 11

02-16 Multi-Function Output 2 (MO1)

02-17 Multi-Function Output 3 (MO2)

Default: 0

Settings

0: No function

1: Indication during RUN

2: Operation speed reached

3: Desired frequency reached 1 (Pr.02-22)

4: Desired frequency reached 2 (Pr.02-24)

5: Zero speed (Frequency command)

6: Zero speed including STOP (Frequency command)

7: Over-torque 1 (Pr.06-06–06-08)

8: Over-torque 2 (Pr.06-09–06-11)

9: Drive is ready

10: Low voltage warning (Lv) (Pr.06-00)

11: Malfunction indication

13: Overheat warning (Pr.06-15)

14: Software brake signal indication (Pr.07-00)

15: PID feedback error (Pr.08-13, 08-14)

16: Slip error (oSL)

17: Count value reached, does not return to 0 (Pr.02-20)

18: Count value reached, return to 0 (Pr.02-19)

19: External interrupt B.B. input (Base Block)

20: Warning output

21: Over-voltage

22: Over-current stall prevention

23: Over-voltage stall prevention

24: Operation mode

25: Forward command

26: Reverse command

29: Output when frequency ≥ Pr.02-34

30: Output when frequency < Pr.02-34

31: Y-connection for the motor coil

32: Δ-connection for the motor coil

33: Zero speed (actual output frequency)

34: Zero speed including STOP (actual output frequency)

35: Error output selection 1 (Pr.06-23)

36: Error output selection 2 (Pr.06-24)

37: Error output selection 3 (Pr.06-25)

38: Error output selection 4 (Pr.06-26)

40: Speed reached (including STOP)
42: Crane function
43: Actual motor speed detection
44: Low current output (use with Pr.06-71–Pr.06-73)
45: UVW output electromagnetic valve switch
46: Master dEb output
50: Output control for CANopen
51: Analog output control for RS-485 interface
52: Output control for communication cards
53: Fire mode indication
66: SO output logic A
67: Analog input level reached
68: SO output logic B
73: Over-torque 3
74: Over-torque 4
75: Forward RUN status
76: Reverse RUN status

Use this parameter to set the function of multi-function terminals.

Summary of Function Settings

(Take the normal open contact (N.O.) for example, ON: contact is closed, OFF: contact is open)

Settings	Functions	Descriptions
0	No Function	Output terminal with no function
1	Indication during RUN	Activates when the drive is not in STOP.
2	Operation speed reached	Activates when output frequency of drive reaches to the setting frequency.
3	Desired frequency reached 1 (Pr.02-22)	Activates when the desired frequency (Pr.02-22) is reached.
4	Desired frequency reached 2 (Pr.02-24)	Activates when the desired frequency (Pr.02-24) is reached.
5	Zero speed (Frequency command)	Activates when Frequency command = 0. (the drive must be in RUN status)
6	Zero speed including STOP (Frequency command)	Activates when Frequency command = 0 or stopped.
7	Over-torque 1	Activates when the drive detects over-torque. Pr.06-07 sets the over-torque detection level (motor 1), and Pr.06-08 sets the over-torque detection time (motor 1). Refer to Pr.06-06–06-08.
8	Over-torque 2	Activates when the drive detects over-torque. Pr.06-10 sets the over-torque detection level (motor 2), and Pr.06-11 sets the over-torque detection time (motor 2). Refer to Pr.06-09–06-11.
9	Drive is ready	Activates when the drive is ON with no error detected.

Settings	Functions	Descriptions
10	Low voltage warning (Lv)	Activates when the DC bus voltage is too low. (refer to Pr.06-00 Low Voltage Level)
11	Malfunction indication	Activates when fault occurs (except Lv stop).
13	Overheat warning	Activates when IGBT or heat sink overheats to prevent the drive from shutting down due to overheating. (refer to Pr.06-15)
14	Software brake signal indication	Activates when the soft brake function is ON. (refer to Pr.07-00).
15	PID feedback error (Pr.08-13, 08-14)	Activates when the PID feedback signal error is detected.
16	Slip error (oSL)	Activates when the slip error is detected.
17	Count value reached, does not return to 0 (Pr.02-20)	When the drive executes external counter, this contact activates if the count value is equal to the setting value for Pr.02-20. This contact deactivates when the setting value for Pr.02-20 > Pr.02-19.
18	Count value reached, returns to 0 (Pr.02-19)	When the drive executes the external counter, this contact activates if the count value is equal to the setting value for Pr.02-19.
19	External interrupt B.B. input (Base Block)	Activates when external interrupt (B.B.) stop output occurs in the drive.
20	Warning output	Activates when a warning is detected.
21	Over-voltage	Activates when over-voltage is detected. (Refer to Chapter 14 over-voltage related fault description for the action level.)
22	Over-current stall prevention	Activates when the over-current stall prevention is detected.
23	Over-voltage stall prevention	Activates when over-voltage stall prevention is detected.
24	Operation mode	Activates when the source of operation command is not controlled by the digital keypad (Pr.00-21 ≠ 0).
25	Forward command	Activates when the operation direction is forward.
26	Reverse command	Activates when the operation direction is reverse.
29	Output when frequency ≥ Pr.02-34	Activates when frequency is ≥ Pr.02-34 (actual output H ≥ Pr.02-34).
30	Output when frequency < Pr.02-34	Activates when frequency is < Pr.02-34 (actual output H < Pr.02-34).
31	Y-connection for the motor coil	Activates when Pr.05-24 = 1, the frequency output is lower than Pr.05-23 minus 2 Hz and the time is longer than Pr.05-25.
32	Δ-connection for the motor coil	Activates when Pr.05-24 = 1, the frequency output is higher than Pr.05-23 plus 2 Hz and the time is longer than Pr.05-25.

Settings	Functions	Descriptions
33	Zero speed (actual output frequency)	Activates when the actual output frequency is 0 (the drive is in RUN mode).
34	Zero speed including stop (actual output frequency)	Activates when the actual output frequency is 0 or stopped.
35	Error output selection 1 (Pr.06-23)	Activates when Pr.06-23 is ON.
36	Error output selection 2 (Pr.06-24)	Activates when Pr.06-24 is ON.
37	Error output selection 3 (Pr.06-25)	Activates when Pr.06-25 is ON.
38	Error output selection 4 (Pr.06-26)	Activates when Pr.06-26 is ON.
40	Speed reached (including Stop)	Activates when the drive's output frequency reaches the setting frequency or stopped.
42	Crane function	Use this function with Pr.02-34 and Pr.02-58. Refer to Pr.02-34 and 02-58 for details and application examples.
43	Actual motor speed detection	Activates when the motor actual speed is less than Pr.02-47.
44	Low current output	Use this function with Pr.06-71–Pr.06-73.
45	UVW output electromagnetic valve switch	Use this function with external terminal input = 49 (drive enabled) and external terminal output = 45 (electromagnetic valve enabled), and then the electromagnetic valve is ON or OFF according to the status of the drive. 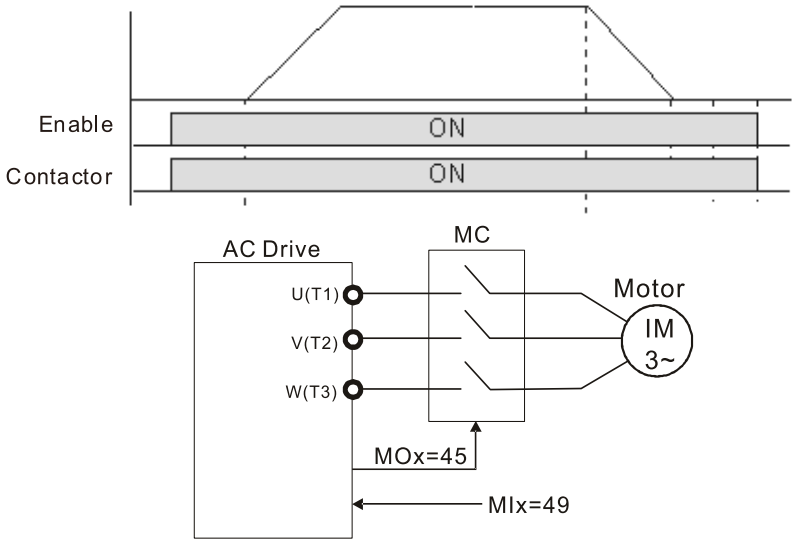
46	Master dEb output	When dEb rises at the master, MO sends a dEb signal to the slave. Output the message when the master triggers dEb. This ensures that the slave also triggers dEb. Then the slave follows the deceleration time of the master to stop simultaneously with the master.

<table>
<tr><th>Settings</th><th>Functions</th><th>Descriptions</th></tr>
<tr><td>50</td><td>Output control for CANopen</td><td>Control the multi-function output terminals through CANopen.
The mapping table of the CANopen DO is shown in the following table:
<table>
<tr><th>Physical terminal</th><th>Setting for related parameters</th><th>Attribute</th><th>Corresponding index</th></tr>
<tr><td>RY1</td><td>Pr.02-13=50</td><td>RW</td><td>2026-41
bit 0 of initial value 0x01</td></tr>
<tr><td>MO1</td><td>Pr.02-16=50</td><td>RW</td><td>2026-41
bit 3 of initial value 0x01</td></tr>
<tr><td>MO2</td><td>Pr.02-17=50</td><td>RW</td><td>2026-41
bit 4 of initial value 0x01</td></tr>
</table>
Refer to Section 15-3-5 for more information.</td></tr>
<tr><td>51</td><td>Analog output control for RS-485 interface</td><td>For RS-485 communication control output.</td></tr>
<tr><td>52</td><td>Output control for communication cards</td><td>Control the output through the communication cards
(CMM-PD02, CMM-DN02, CMM-EIP02, CMM-COP02, CMM-EC02)
<table>
<tr><th>Physical terminal</th><th>Setting of related parameters</th><th>Attribute</th><th>Corresponding Address</th></tr>
<tr><td>RY</td><td>Pr.02-13 = 51</td><td>RW</td><td>bit 0 of 2640</td></tr>
<tr><td>MO1</td><td>Pr.02-16 = 51</td><td>RW</td><td>bit 3 of 2640</td></tr>
<tr><td>MO2</td><td>Pr.02-17 = 51</td><td>RW</td><td>bit 4 of 2640</td></tr>
</table></td></tr>
<tr><td>53</td><td>Fire mode indication</td><td>Activates when MI setting 58 or 59 is enabled.</td></tr>
<tr><td>66</td><td>SO output logic A</td><td rowspan="2">
<table>
<tr><th rowspan="2">Status of the drive</th><th colspan="2">Status of the safety output</th></tr>
<tr><th>Status A (MO = 66)</th><th>Status B (MO = 68)</th></tr>
<tr><td>Normal</td><td>Broken circuit (open)</td><td>Short circuit (closed)</td></tr>
<tr><td>STO</td><td>Short circuit (closed)</td><td>Broken circuit (open)</td></tr>
<tr><td>STL1–STL3</td><td>Short circuit (closed)</td><td>Broken circuit (open)</td></tr>
</table></td></tr>
<tr><td>68</td><td>SO output logic B</td></tr>
<tr><td>67</td><td>Analog input level reached</td><td>The multi-function output terminals operate when the analog input level is between the high level and the low level.
Pr.03-44: Select one of the analog input channels (AVI, ACI) to be compared.
Pr.03-45: The high level for the analog input, default is 50%.
Pr.03-46: The low level for the analog input, default is 10%.
If analog input > Pr.03-45, the multi-function output terminal operates. If analog input < Pr.03-46, the multi-function output terminal stops output.</td></tr>
<tr><td>73</td><td>Over-torque 3</td><td>Activates when over-torque is detected. Pr.14-75 sets the over-torque detection level. Pr.14-76 sets the over-torque detection time (refer to Pr.14-74–14-76).</td></tr>
<tr><td>74</td><td>Over-torque 4</td><td>Activates when over-torque is detected. Pr.14-78 sets the over-torque detection level. Pr.14-79 sets the over-torque detection time (refer to Pr.14-77–14-79).</td></tr>
</table>

Settings	Functions	Descriptions
75	Forward RUN status	When the drive runs FWD, the output terminal for forward running is closed; when the drive stops, the output terminal for forward running is open.
76	Reverse RUN status	When the drive runs REV, the output terminal for reverse running is closed; when the drive stops, the output terminal for reverse running is open.

02-18 Multi-Function Output Direction

Default: 0

Settings 0–65535

- This parameter is in decimal.
- This parameter is set by a bit. If the bit is 1, the corresponding multi-function output acts in an opposite way.

  Example: Assume Pr.02-13 = 1 (indication when the drive is operating). If the output is positive, and the bit is set to 0, then Relay is ON when the drive runs and is OFF when the drive stops. On the contrary, if the output is negative, and the bit is set to 1, then the Relay is OFF when the drive runs and is ON when the drive stops.

bit 4	bit 3	bit 2	bit 1	bit 0
MO2	MO1	Reserved	Reserved	RY

02-19 Terminal Counting Value Reached (returns to 0)

Default: 0

Settings 0–65500

- The counting function is enabled when Pr.02-19 ≠ 0.
- You can set the input point for the counter using the multi-function terminal MI6 as a trigger terminal (set Pr.02-06 to 23). When counting is completed, the specified multi-function output terminal is activated (Pr.02-13, Pr.02-16, or Pr.02-17 is set to 18). Pr.02-19 cannot be set to 0 at this time.

  For example, if the keypad displays c5555, it means that the counting value is 5,555. If the keypad displays c5555●, then the actual counting value is 55,550–55,559.

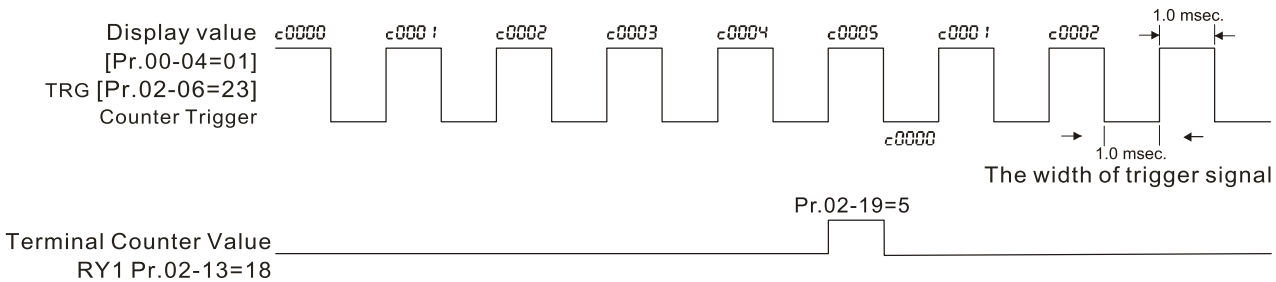

The timing diagram of
the external counting terminals and the counting value reached

02-20 Preliminary Counting Value Reached (does not return to 0)

Default: 0

Settings 0–65500

- Use this parameter with Pr.02-19.
- When the count value counts from 1 to reach this value, the corresponding multi-function output terminal is activated (Pr.02-13, Pr.02-16, or Pr.02-17 is set to 17) and keeps counting to the last count value. You can use this parameter as the end of counting to make the drive run from the low speed to stop.
- The timing diagram is RY1 activates when the count value is three, and the display returns to zero when counts to five:

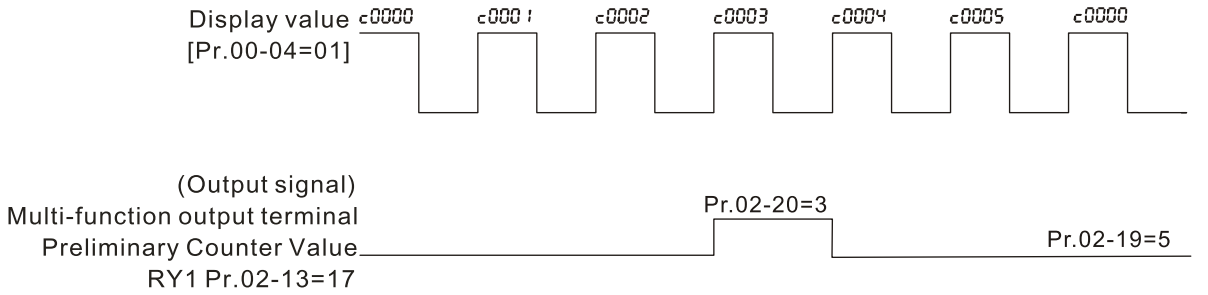

The timing diagram of
the external counting terminals and the counting value reached

02-21 DFM Digital Output Gain

Default: 1

Settings 1–55

- Sets the signal for the digital output terminals (DFM-DCM) and the digital frequency output (pulse, work period=50 %). The output pulse per second = output frequency × Pr.02-21.

02-22 Desired Frequency Reached 1

Default: 60.00 / 50.00

Settings 0.00–599.00 Hz

02-23 The Width of the Desired Frequency Reached 1

Default: 2.00

Settings 0.00–599.00 Hz

02-24 Desired Frequency Reached 2

Default: 60.00 / 50.00

Settings 0.00–599.00 Hz

02-25 The Width of the Desired Frequency Reached 2

Default: 2.00

Settings 0.00–599.00 Hz

- Once the output speed (frequency) reaches the desired speed (frequency), if the corresponding multi-function output terminal is set to 3 or 4 (Pr.02-13, Pr.02-16, and Pr.02-17), this multi-function output terminal is “closed”.

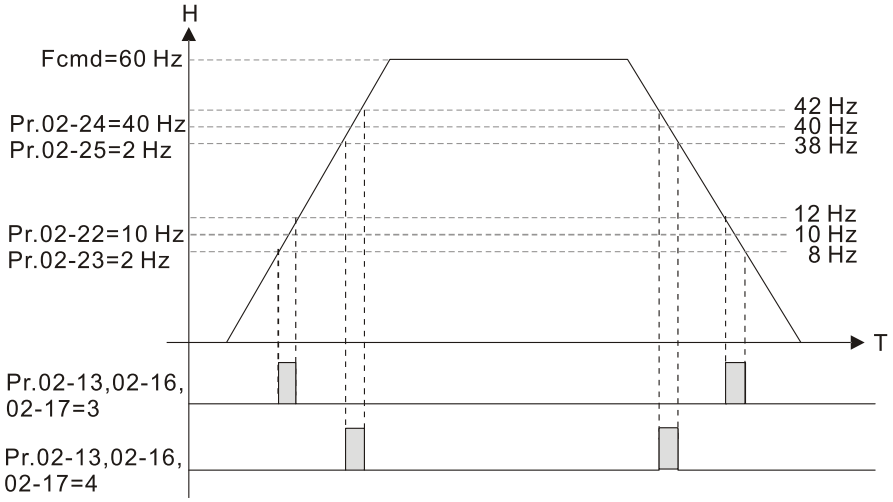

02-32 Brake Delay Time

Default: 0.000

Settings 0.000–65.000 sec.

When the AC motor drive runs after the setting delay time of Pr.02-32, the corresponding multi-function output terminal (42: Crane Function) is “closed”.

02-33 Output Current Level Setting for Multi-Function Output Terminal

Default: 0

Settings 0–100%

02-34 Output Frequency Setting for Multi-function Output Terminal

Default: 3.00

Settings 0.00–599.00 Hz

02-55 Multi-Function Output Terminal (Function 42): Brake Current Check Point

Default: 0

Settings 0.000–65.000 sec.

When the AC motor drive runs after the setting delay time of Pr.02-55, the corresponding multi-function output terminal (42: Crane Function) is “opened”.

02-57 Multi-Function Output Terminal (Function 42): Brake Current Check Point

Default: 0.00

Settings 0–100%

02-58 Multi-Function Output Terminal (Function 42): Brake Frequency Check Point

Default: 3.00

Settings 0.00–599.00 Hz

Pr.02-32, Pr.02-33, Pr.02-34, Pr.02-55, Pr.02-57 and Pr.02-58 can be applied on setting up cranes. (Choose crane action #42 to set up multi-function output Pr.02-13, Pr.02-14, Pr.02-16 and Pr.02-17)

When the drive outputs current higher than the setting for Pr.02-33 Pivot Point of the Current (≥ Pr.02-33), and outputs frequency higher than the setting for Pr.02-34 Pivot Point of the Frequency (≥ Pr.02-34), multi-function output Pr.02-13, Pr.02-14, Pr.02-16 and Pr.02-17 are set to 42 after the delay time setting for Pr.02-32.

- When the Pivot Point of the Current's setting Pr.02-57≠0 and when the output current of the drive is lower than the setting for Pr.02-57 (< Pr.02-57), or the output frequency is lower than the setting for Pr.02-58 (< Pr.02-58), disable the setting #42 of the multi-function output Pr.02-13, Pr.02-14, Pr.02-16 and Pr.02-17 after the delay time setting for Pr.02-55.
- When Pr.02-57 = 0, the output current is lower than the setting for Pr.02-33 Pivot Point of the current (< Pr.02-33), or the output frequency is lower than the setting for Pr.02-58 (< Pr.02-58), disable the setting of #42 of the multi-function output Pr.02-13, Pr.02-14, Pr.02-16 and Pr.02-17 after the delay time setting for Pr.02-55.
- When using crane application, and MOx = 42, Pr.02-34 must be larger than Pr.02-58; and Pr.02-33 must be larger than Pr.02-57.

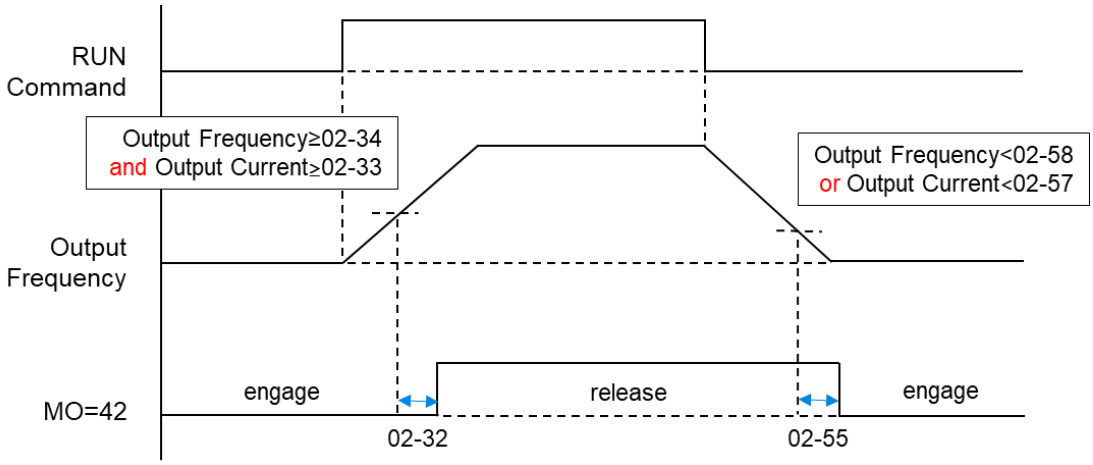

02-35 External Operation Control Selection after Reset and Reboot

Default: 0

Settings 0: Disable
1: Drive runs if the RUN command remains after reset or reboot.

Setting value as 1: Pay attention that the drive will execute the running command by itself in the following status.

- Situation 1: After the drive is powered on and the external terminal for RUN stays ON, the drive runs.
- Situation 2: After clearing a fault once a fault is detected and the external terminal for RUN stays ON, you can run the drive by pressing the RESET key.

02-47 Motor Zero-speed Level

Default: 0

Settings 0–65535 rpm

- Use this parameter with MO = 43 and set Pr.10-00 = 5.
- Use this parameter to set the motor's speed level at zero-speed. When the actual speed is lower than this setting, the corresponding multi-function output terminal setting 43 is ON, as shown in the diagram below.

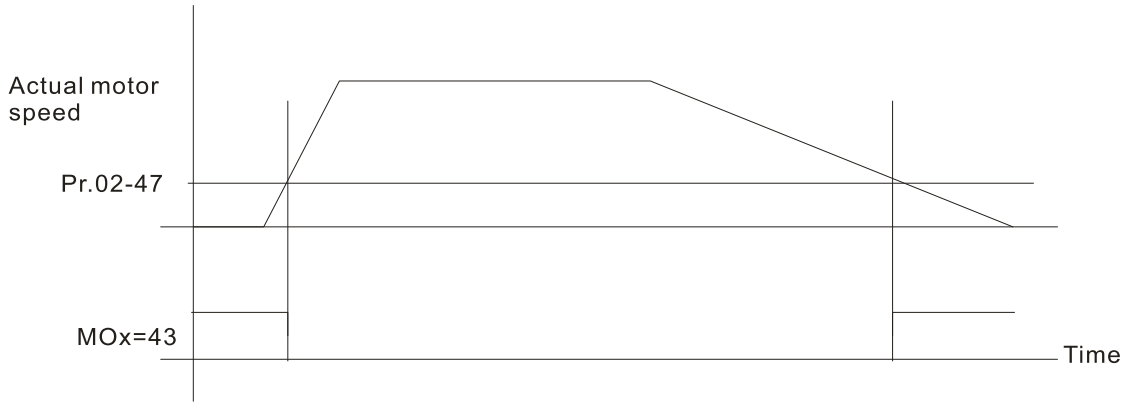

02-50 Display the Status of Multi-Function Input Terminal

Default: Read only

Settings Monitor the status of the Multi-function Input Terminal

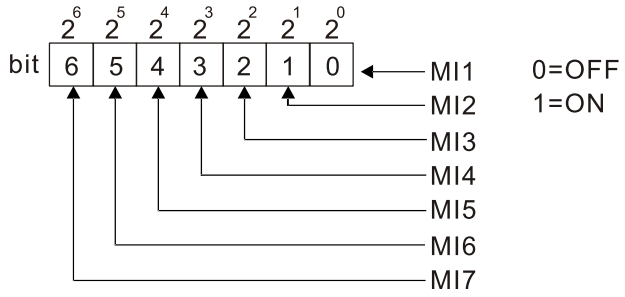

NOTE
$2^6 = 64$ $2^5 = 32$ $2^4 = 16$
$2^3 = 8$ $2^2 = 4$ $2^1 = 2$ $2^0 = 1$

Example:

When Pr.02-50 displays 0034h (hex) (that is, the value is 52 (decimal) and 0110100 (binary)), it means that MI3, MI5 and MI6 are ON.

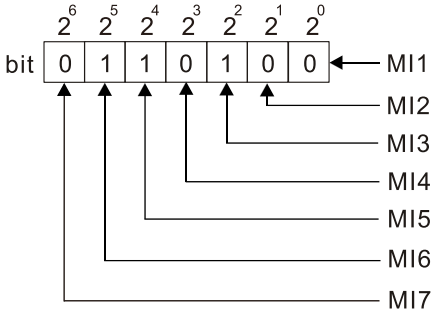

0=OFF
1=ON

Setting
$= \text{bit } 5 \times 2^5 + \text{bit } 4 \times 2^4 + \text{bit } 2 \times 2^2$
$= 1 \times 2^5 + 1 \times 2^4 + 1 \times 2^2$
$= 32 + 16 + 4$
$= 52$

NOTE
$2^6 = 64$ $2^5 = 32$ $2^4 = 16$
$2^3 = 8$ $2^2 = 4$ $2^1 = 2$ $2^0 = 1$

02-51 Display the Status of Multi-Function Output Terminal

Default: Read only

Settings Monitor the status of the Multi-function Output Terminal

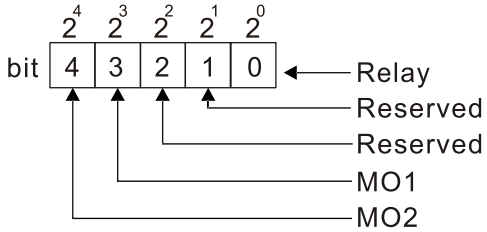

NOTE
$2^4 = 16$ $2^3 = 8$ $2^2 = 4$
$2^1 = 2$ $2^0 = 1$

Example:

When Pr.02-51 displays 0009h (hex) (that is, the value is 9 (decimal) and 01001 (binary)), it means that Relay and MO1 are ON.

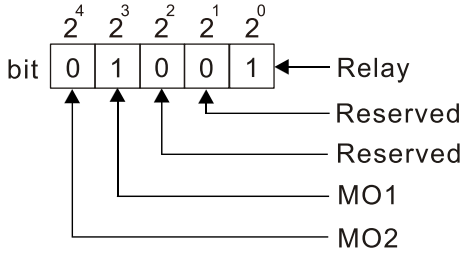

0=OFF
1=ON

Setting
= bit 3 x 2^3 + bit 0 x 2^0
= 1 x 2^3 + 1 x 2^0
= 8 + 1
= 9

NOTE
2^4 = 16 2^3 = 8 2^2 = 4
2^1 = 2 2^0 = 1

02-52 Display the External Multi-function Input Terminals Used by PLC

Default: Read only

Settings Monitor the status of PLC input terminals

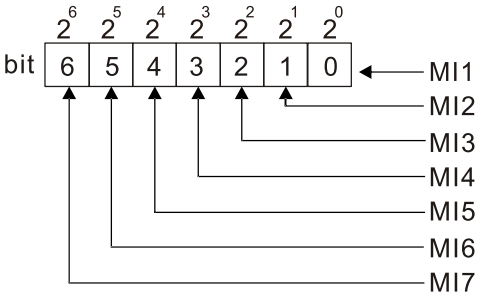

0=OFF
1=ON

NOTE
2^6 = 64 2^5 = 32 2^4 = 16
2^3 = 8 2^2 = 4 2^1 = 2 2^0 = 1

Example:

When Pr.02-52 displays 0034h (hex) (that is, the value is 52 (decimal) and 0110100 (binary)), it means that MI3, MI5 and MI6 are used by PLC.

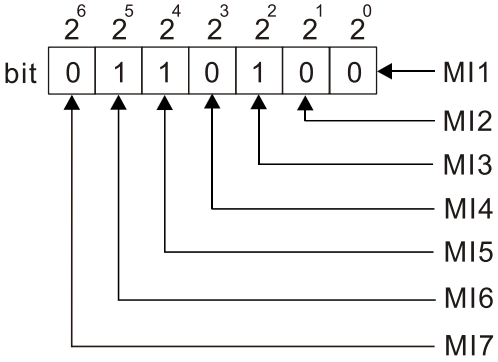

0=OFF
1=ON

Setting
= bit 5 x 2^5 + bit 4 x 2^4 + bit 2 x 2^2
= 1 x 2^5 + 1 x 2^4 + 1 x 2^2
= 32 + 16 + 4
= 52

NOTE
2^6 = 64 2^5 = 32 2^4 = 16
2^3 = 8 2^2 = 4 2^1 = 2 2^0 = 1

02-53 Display the External Multi-function Output Terminals Used by PLC

Default: Read only

Settings Monitor the status of PLC output terminals

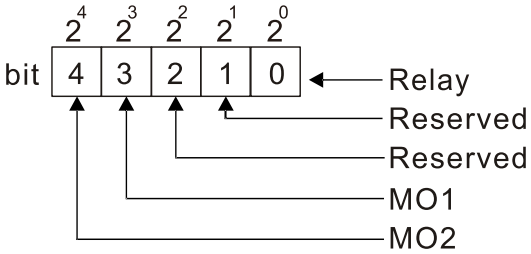

0=OFF
1=ON

NOTE
2^4 = 16 2^3 = 8 2^2 = 4
2^1 = 2 2^0 = 1

Example:

When Pr.02-53 displays 0009h (hex) (that is, the value is 9 (decimal) and 01001 (binary)), it means that Relay and MO1 are used by PLC.

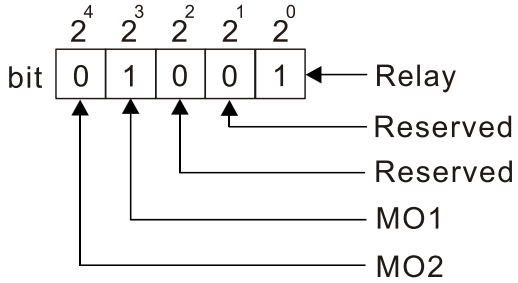

0=OFF
1=ON

Setting
= bit 3 x 2^3 + bit 0 x 2^0
= 1 x 2^3 + 1 x 2^0
= 8 + 1
= 9

NOTE
2^4 = 16 2^3 = 8 2^2 = 4
2^1 = 2 2^0 = 1

02-54 Display the Frequency Command Executed by External Terminal

Default: Read only

Settings 0.00–599.00 Hz (Read only)

When you set the source of the Frequency command as the external terminal, if LV or Fault occurs, the external terminal Frequency command is saved in this parameter.

02-74 Internal / External Multi-Function Input Terminal Selection

Default: 0000h

Settings 0000–FFFFh

Selects the terminals MI1–MI7 to be internal terminals or external terminals. When the MIx is set as internal terminal, the corresponding external terminal function is disabled.

To activate internal terminals via Pr.02-75 setting.

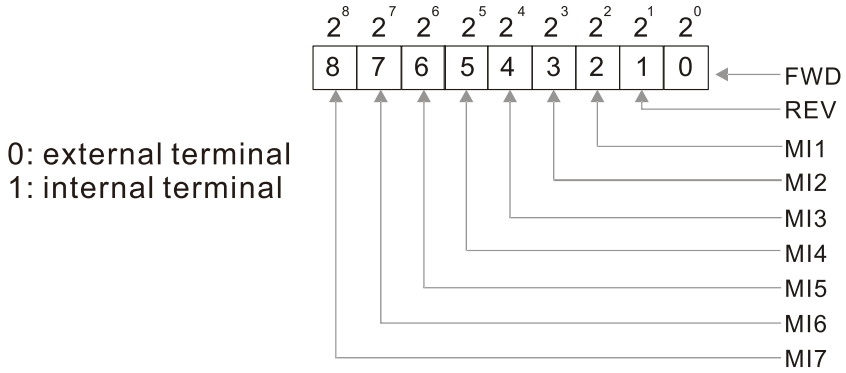

Setting method: convert the binary 12bit number to hexadecimal number for input.

Example: if the MI1, MI3, MI4 are triggered by virtual terminals, then Pr.02-74 = 34h.

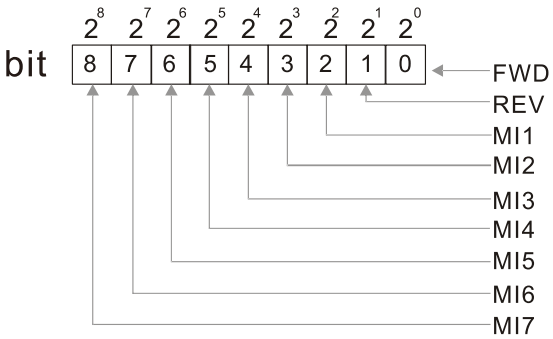

0: external terminal
1: internal terminal

Settings
= bit5 x 2^5 + bit4 x 2^4 +bit2 x 2^2
= 1 x 2^5 +1 x 2^4 + 1 x 2^2
= 32 + 16 + 4 =52

Pr.02-74
=> 52_{10} = 34h

Note
2^{12} = 4096 2^{11} = 2048 2^{10} =1024
2^7 = 128 2^6 = 64 2^5 =32
2^4 = 16 2^3 = 8 2^2 =4
2^1 = 2 2^0 = 1

02-75 Internal Multi-Function Output Terminal Selection

Default: 0000h

Settings 0000–FFFFh

- Sets the internal terminal action (ON / OFF) through digital keypad, communication or PLC.
- The Local / Remote options on the digital keypad have the lowest priority. When the PLC uses the entity DI, the corresponding function of original DI can still be triggered through virtual terminals.
- Pr.02-74 and Pr.02-75 can both be changed during RUN.
- Pr.02-74 and Pr.02-75 are saved after powering off.
- You can choose N.O. (Pr.02-12 bit = 0) or N.C. (Pr.02-12 bit = 1) through the Pr.02-12 MI mode to trigger the virtual terminals.

  Example: Sets Pr.02-75 = 34h to activate MI1, MI3 and MI4.

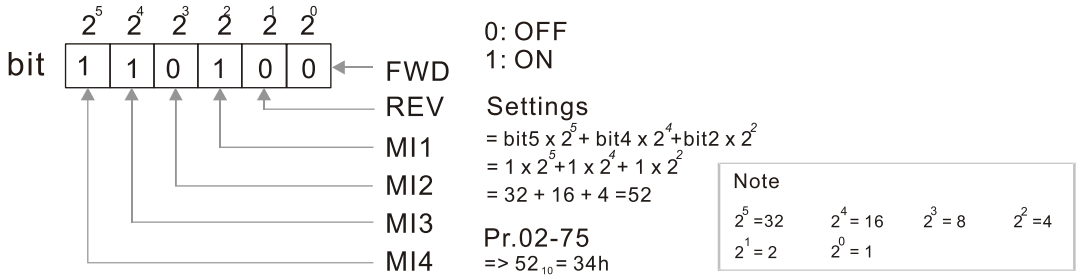

02-78 Motor Deceleration Ratio

Default: 200.0

Settings 4.0–1000.0

02-79 Automatic Positioning Angle Setting

Default:180.0

Settings 0.0–6480.0

02-80 Automatic Positioning Deceleration Time

Default: 0.00

Settings 0.01–100.00 sec.

- Automatic positioning function is disabled when Pr.02-80 = 0.00.
- Use this parameter with the multi-function input terminal setting 81 (Simple positioning zero point position signal input) to complete the positioning setting for application.
- tf automatically generates according to the positioning angle. Δt = Pr.02-80. The gross area (tf + Δt is the required distance of the positioning.

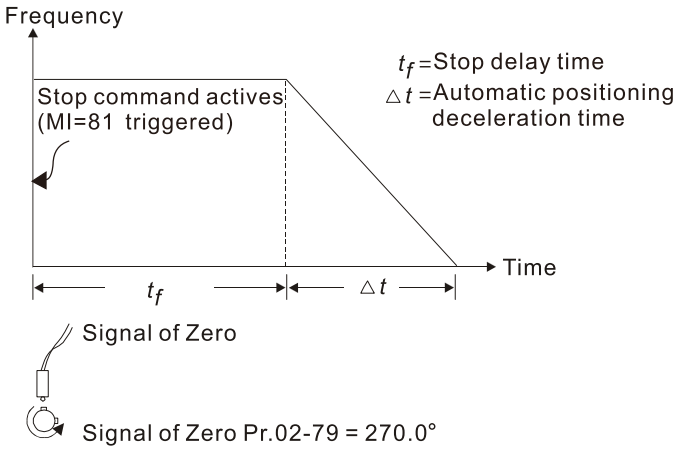

02-81 EF Activates when the Terminal Count Value Reached

Default: 0

Settings 0: Terminal count value reached, no EF displays (continues to operate)

1: Terminal count value reached, EF activates

02-82 Initial Frequency Command (F) Mode after Stop

Default: 0

Settings 0: Use current Frequency command

1: Use zero Frequency command

2: Refer to Pr.02-83 to set up

02-83 Initial Frequency Command (F) Setting after Stop

Default: 60.00

Settings 0.00–599.00 Hz

03 Analog Input / Output Parameters

You can set this parameter during operation.

03-00 AVI Analog Input Selection

Default: 1

03-01 ACI Analog Input Selection

Default: 0

Settings

0: No function

1: Frequency command

2: Torque command (torque limit under speed mode)

3: Torque compensation command

4: PID target value

5: PID feedback signal

6: Thermistor (PTC) input value

7: Positive torque limit

8: Negative torque limit

9: Regenerative torque limit

10: Positive / negative torque limit

11: PT100 thermistor input value

12: Auxiliary frequency input

13: PID compensation value

- When you use analog input as the PID reference target input, you must set Pr.00-20 to 2 (external analog input).
- Setting method 1: Pr.03-00–03-01 set 1 as Frequency command.
- Setting method 2: Pr.03-00–03-01 set 4 as PID reference target input.
- If the setting value 1 and setting value 4 exist at the same time, the AVI input has highest priority to become the PID reference target input value.
- When you use analog input as the PID compensation value, you must set Pr.08-16 to 1 (source of PID compensation value is analog input). You can see the compensation value with Pr.08-17.
- When using the Frequency command, the corresponding value for 0–10 V / 4–20 mA is 0–maximum operation frequency (Pr.01-00).
- When using the torque command, the corresponding value for 0–10 V / 4–20 mA is 0–maximum output torque (Pr.11-27).
- When using torque compensation, the corresponding value for 0–10 V / 4–20 mA is 0–the motor’s rated torque.
- If the settings for Pr.03-00–Pr.03-01 are the same, the AVI input has priority over the ACI input.

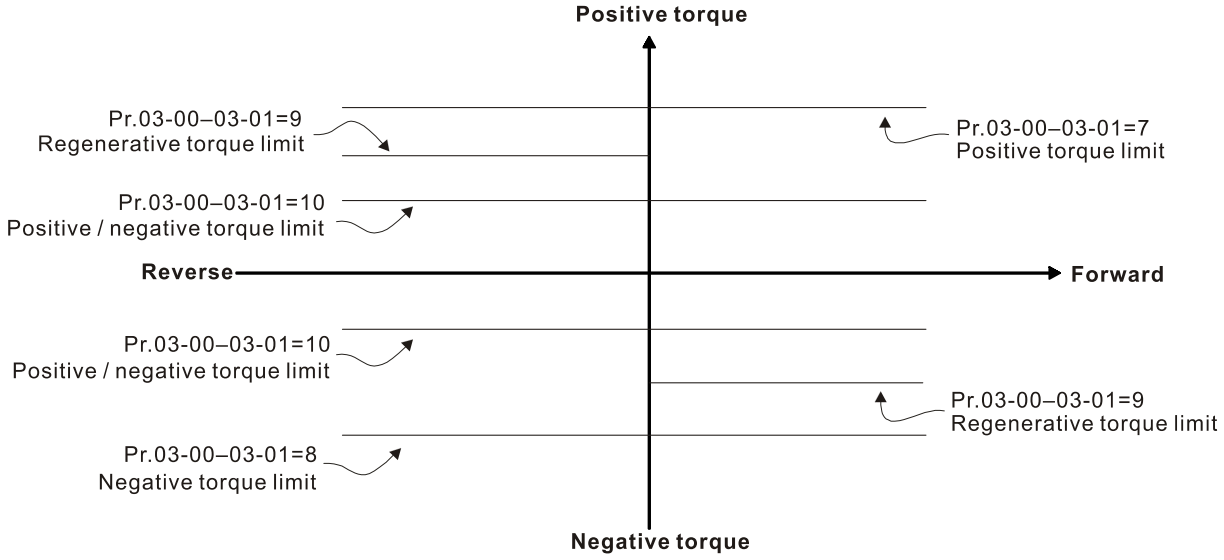

03-03 AVI Analog Input Bias

Default: 0

Settings -100.0–100.0%

Sets the corresponding AVI voltage for the external analog input 0.

03-04 ACI Analog Input Bias

Default: 0

Settings -100.0–100.0%

Sets the corresponding ACI current for the external analog input 0.

03-07 AVI Positive / Negative Bias Mode

03-08 ACI Positive / Negative Bias Mode

Default: 0

Settings
0: No bias
1: Lower than or equal to bias
2: Greater than or equal to bias
3: The absolute value of the bias voltage while serving as the center
4: Bias serves as the center

Using negative bias to set the frequency greatly reduces the noise interference. In a noisy environment, do NOT use signals less than 1 V to set the drive's operation frequency.

03-10 Reverse Setting when Analog Signal Input is Negative Frequency

Default: 0

Settings
0: Negative frequency input is not allowed. The digital keypad or external terminal controls the forward and reverse direction.
1: Negative frequency input is allowed. Positive frequency = run in a forward direction; negative frequency = run in a reverse direction. The digital keypad or external terminal control cannot change the running direction.

Use this parameter only for AVI or ACI analog input.

📖 Requirements for negative frequency (reverse running):

Pr.03-10 = 1

Bias mode = Bias serves as the center

Corresponded analog input gain < 0 (negative); this makes the input frequency negative.

📖 In using the analog input addition function (Pr.03-18 = 1), when the analog signal is negative after the addition, you can set this parameter to allow or not allow the reverse running. The result after adding depends on the “Requirements for negative frequency (reverse running)”.

In the diagram below: Black line: Curve with no bias. Gray line: curve with bias

Diagram 01

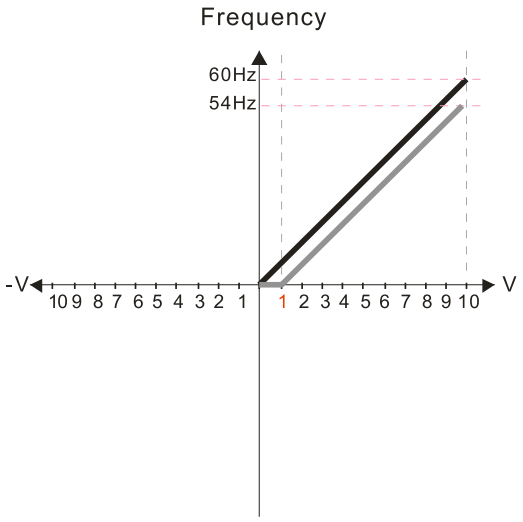

Pr.03-03=10%
Pr.03-07–03-08 (Positive/Negative Bias Mode)

0: No bias
1: Lower than or equal bias
2: Greater than or equal to bias
3: The absolute value of the bias voltage while serving as the center
4: Bias serves as the center

Pr.03-10 (Analog Frequency Command for Reverse Run)
0: Negative frequency is not valid. Forward and reverse run is controlled by digital keyboard or external terminals.
1: Negative frequency is valid. Positive frequency = forward run; negative frequency = reverse run. Direction can not be switched by digital keypad or external terminal control.

Pr.03-11 Analog input Gain (AVI) = 100%

Diagram 02

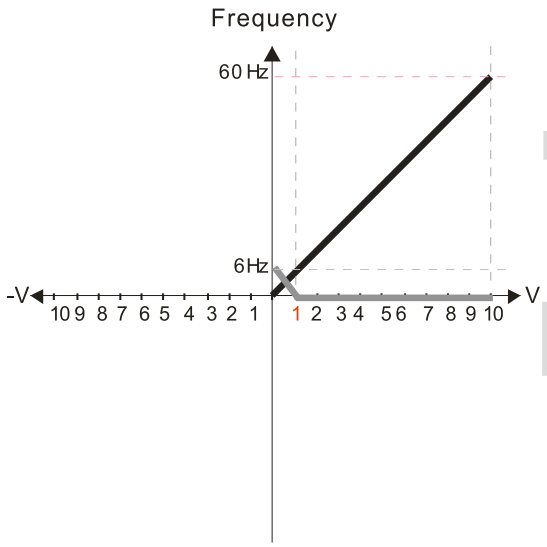

Pr.03-03=10%
Pr.03-07–03-08 (Positive/Negative Bias Mode)

0: No bias
1: Lower than or equal bias
2: Greater than or equal to bias
3: The absolute value of the bias voltage while serving as the center
4: Bias serves as the center

Pr.03-10 (Analog Frequency Command for Reverse Run)
0: Negative frequency is not valid. Forward and reverse run is controlled by digital keyboard or external terminals.
1: Negative frequency is valid. Positive frequency = forward run; negative frequency = reverse run. Direction can not be switched by digital keypad or external terminal control.

Pr.03-11 Analog input Gain (AVI) = 100%

Diagram 03

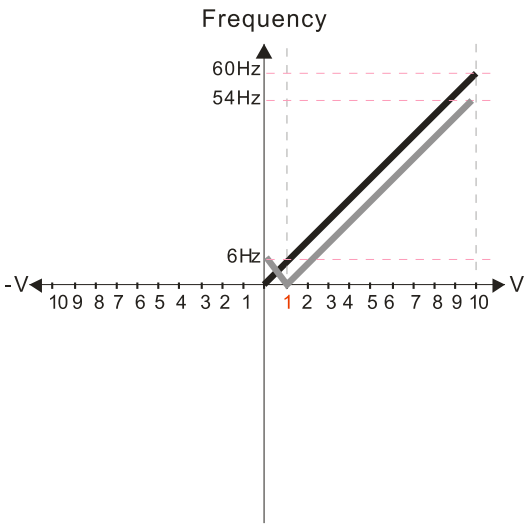

Pr.03-03=10%
Pr.03-07–03-08 (Positive/Negative Bias Mode)

0: No bias
1: Lower than or equal bias
2: Greater than or equal to bias
3: The absolute value of the bias voltage while serving as the center
4: Bias serves as the center

Pr.03-10 (Analog Frequency Command for Reverse Run)
0: Negative frequency is not valid. Forward and reverse run is controlled by digital keyboard or external terminals.
1: Negative frequency is valid. Positive frequency = forward run; negative frequency = reverse run. Direction can not be switched by digital keypad or external terminal control.

Pr.03-11 Analog input Gain (AVI) = 100%

Diagram 04

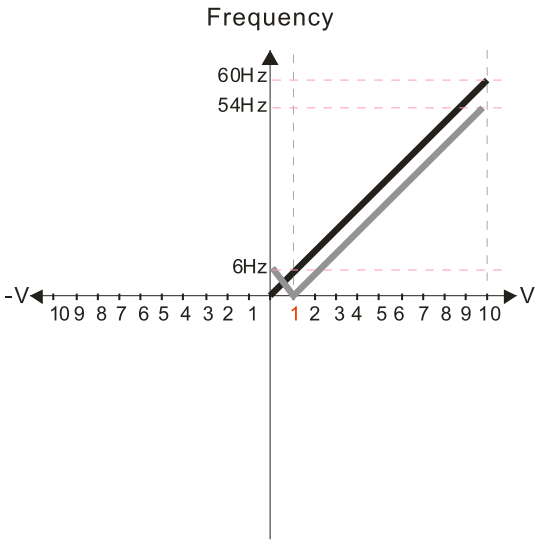

Pr.03-03=10%
Pr.03-07–03-08 (Positive/Negative Bias Mode)

0: No bias
1: Lower than or equal bias
2: Greater than or equal to bias
3: The absolute value of the bias voltage while serving as the center
4: Bias serves as the center

Pr.03-10 (Analog Frequency Command for Reverse Run)
0: Negative frequency is not valid. Forward and reverse run is controlled by digital keyboard or external terminals.
1: Negative frequency is valid. Positive frequency = forward run; negative frequency = reverse run. Direction can not be switched by digital keypad or external terminal control.

Pr.03-11 Analog input Gain (AVI) = 100%

Diagram 05

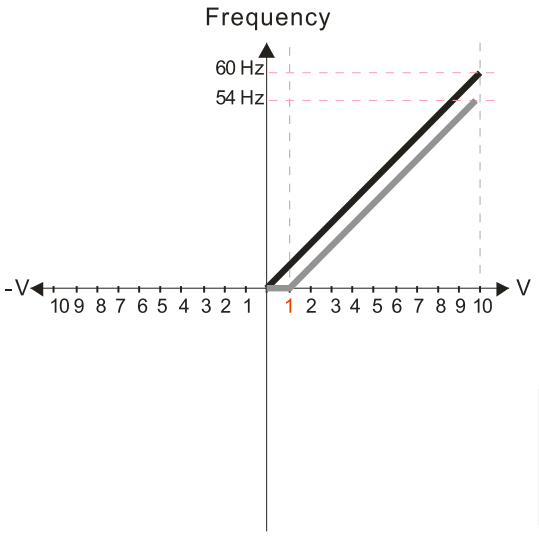

Pr.03-03=10%
Pr.03-07–03-08 (Positive/Negative Bias Mode)

0: No bias
1: Lower than or equal bias
2: Greater than or equal to bias
3: The absolute value of the bias voltage while serving as the center
4: Bias serves as the center

Pr.03-10 (Analog Frequency Command for Reverse Run)
0: Negative frequency is not valid. Forward and reverse run is controlled by digital keyboard or external terminals.
1: Negative frequency is valid. Positive frequency = forward run; negative frequency = reverse run. Direction can not be switched by digital keypad or external terminal control.

Pr.03-11 Analog input Gain (AVI) = 100%

Diagram 06

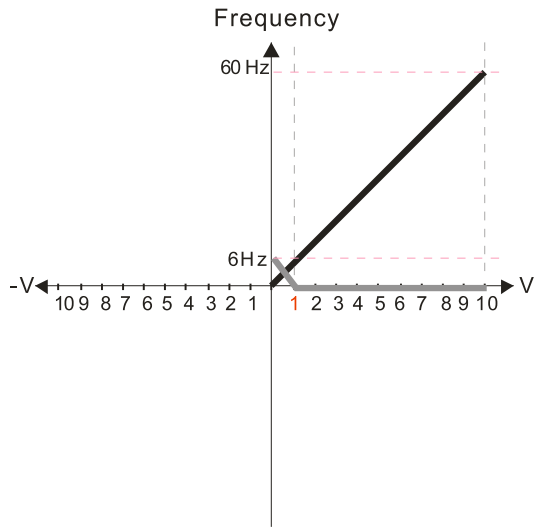

Pr.03-03=10%
Pr.03-07–03-08 (Positive/Negative Bias Mode)

0: No bias
1: Lower than or equal bias
2: Greater than or equal to bias
3: The absolute value of the bias voltage while serving as the center
4: Bias serves as the center

Pr.03-10 (Analog Frequency Command for Reverse Run)
0: Negative frequency is not valid. Forward and reverse run is controlled by digital keyboard or external terminals.
1: Negative frequency is valid. Positive frequency = forward run; negative frequency = reverse run. Direction can not be switched by digital keypad or external terminal control.

Pr.03-11 Analog input Gain (AVI) = 100%

Diagram 07

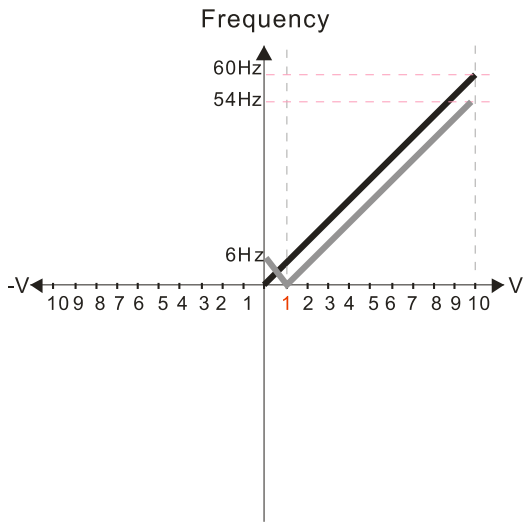

Pr.03-03=10%
Pr.03-07–03-08 (Positive/Negative Bias Mode)

0: No bias
1: Lower than or equal bias
2: Greater than or equal to bias
3: The absolute value of the bias voltage while serving as the center
4: Bias serves as the center

Pr.03-10 (Analog Frequency Command for Reverse Run)
0: Negative frequency is not valid. Forward and reverse run is controlled by digital keyboard or external terminals.
1: Negative frequency is valid. Positive frequency = forward run; negative frequency = reverse run. Direction can not be switched by digital keypad or external terminal control.

Pr.03-11 Analog input Gain (AVI) = 100%

Diagram 08

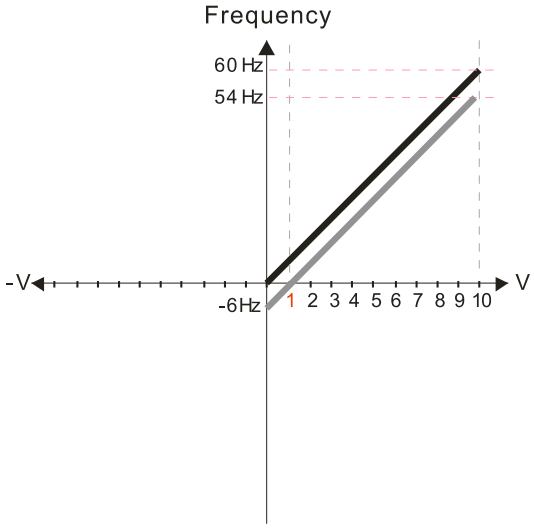

Pr.03-03=10%
Pr.03-07–03-08 (Positive/Negative Bias Mode)

0: No bias
1: Lower than or equal bias
2: Greater than or equal to bias
3: The absolute value of the bias voltage while serving as the center
4: Bias serves as the center

Pr.03-10 (Analog Frequency Command for Reverse Run)
0: Negative frequency is not valid. Forward and reverse run is controlled by digital keyboard or external terminals.
1: Negative frequency is valid. Positive frequency = forward run; negative frequency = reverse run. Direction can not be switched by digital keypad or external terminal control.

Pr.03-11 Analog input Gain (AVI) = 100%

Diagram 09

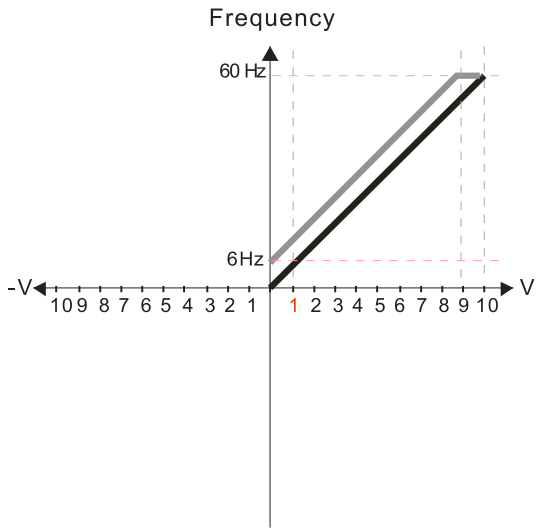

Pr.03-03=-10%
Pr.03-07–03-08 (Positive/Negative Bias Mode)

0: No bias
1: Lower than or equal bias
2: Greater than or equal to bias
3: The absolute value of the bias voltage while serving as the center
4: Bias serves as the center

Pr.03-10 (Analog Frequency Command for Reverse Run)
0: Negative frequency is not valid. Forward and reverse run is controlled by digital keyboard or external terminals.
1: Negative frequency is valid. Positive frequency = forward run; negative frequency = reverse run. Direction can not be switched by digital keypad or external terminal control.

Pr.03-11 Analog input Gain (AVI) = 100%

Diagram 10

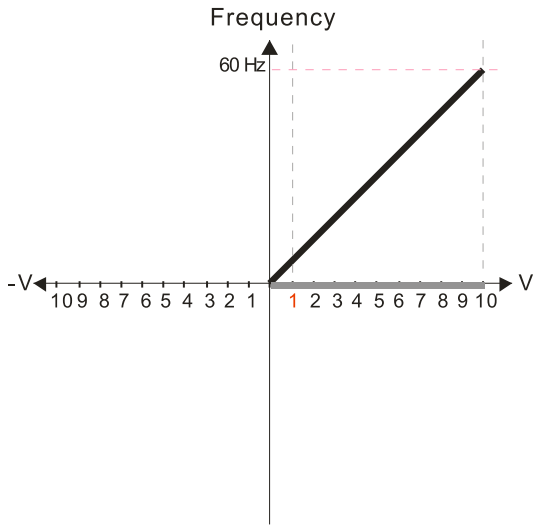

Pr.03-03=-10%
Pr.03-07–03-08 (Positive/Negative Bias Mode)

0: No bias
1: Lower than or equal bias
2: Greater than or equal to bias
3: The absolute value of the bias voltage while serving as the center
4: Bias serves as the center

Pr.03-10 (Analog Frequency Command for Reverse Run)
0: Negative frequency is not valid. Forward and reverse run is controlled by digital keyboard or external terminals.
1: Negative frequency is valid. Positive frequency = forward run; negative frequency = reverse run. Direction can not be switched by digital keypad or external terminal control.

Pr.03-11 Analog input Gain (AVI) = 100%

Diagram 11

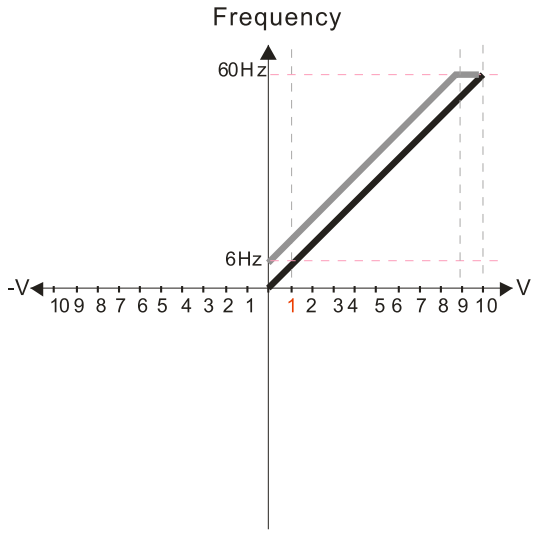

Pr.03-03=-10%
Pr.03-07–03-08 (Positive/Negative Bias Mode)

0: No bias
1: Lower than or equal bias
2: Greater than or equal to bias
3: The absolute value of the bias voltage while serving as the center
4: Bias serves as the center

Pr.03-10 (Analog Frequency Command for Reverse Run)
0: Negative frequency is not valid. Forward and reverse run is controlled by digital keyboard or external terminals.
1: Negative frequency is valid. Positive frequency = forward run; negative frequency = reverse run. Direction can not be switched by digital keypad or external terminal control.

Pr.03-11 Analog input Gain (AVI) = 100%

Diagram 12

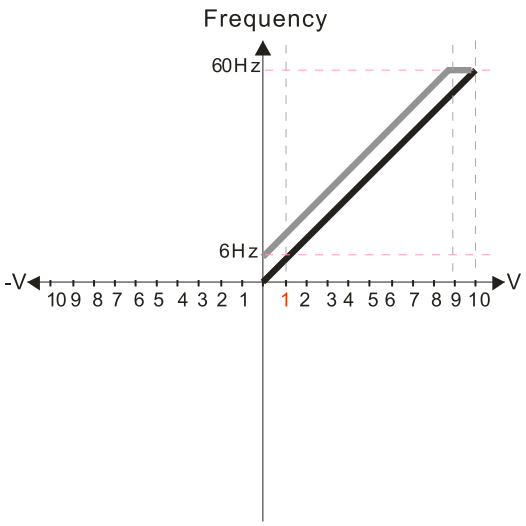

Pr.03-03=-10%
Pr.03-07–03-08 (Positive/Negative Bias Mode)

0: No bias
1: Lower than or equal bias
2: Greater than or equal to bias
3: The absolute value of the bias voltage while serving as the center
4: Bias serves as the center

Pr.03-10 (Analog Frequency Command for Reverse Run)
0: Negative frequency is not valid. Forward and reverse run is controlled by digital keyboard or external terminals.
1: Negative frequency is valid. Positive frequency = forward run; negative frequency = reverse run. Direction can not be switched by digital keypad or external terminal control.

Pr.03-11 Analog input Gain (AVI) = 100%

Diagram 13

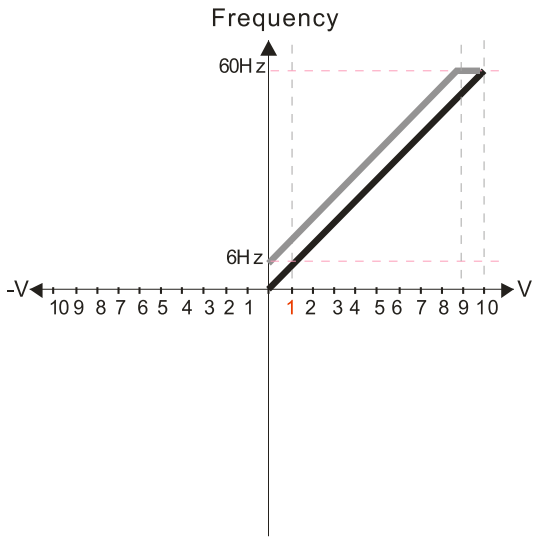

Pr.03-03=-10%
Pr.03-07–03-08 (Positive/Negative Bias Mode)

0: No bias
1: Lower than or equal bias
2: Greater than or equal to bias
3: The absolute value of the bias voltage while serving as the center
4: Bias serves as the center

Pr.03-10 (Analog Frequency Command for Reverse Run)
0: Negative frequency is not valid. Forward and reverse run is controlled by digital keyboard or external terminals.
1: Negative frequency is valid. Positive frequency = forward run; negative frequency = reverse run. Direction can not be switched by digital keypad or external terminal control.

Pr.03-11 Analog input Gain (AVI) = 100%

Diagram 14

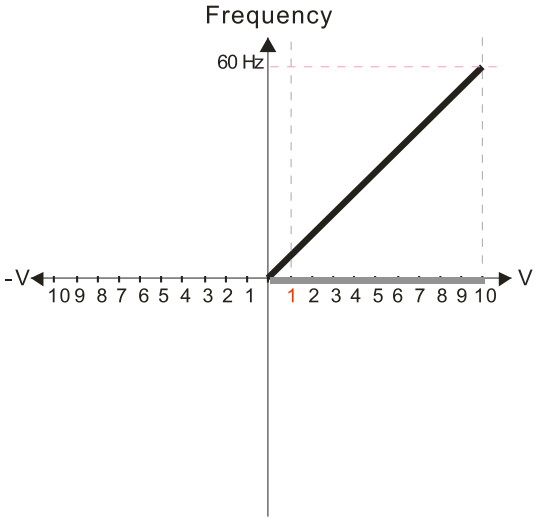

Pr.03-03=-10%
Pr.03-07–03-08 (Positive/Negative Bias Mode)

0: No bias
1: Lower than or equal bias
2: Greater than or equal to bias
3: The absolute value of the bias voltage while serving as the center
4: Bias serves as the center

Pr.03-10 (Analog Frequency Command for Reverse Run)
0: Negative frequency is not valid. Forward and reverse run is controlled by digital keyboard or external terminals.
1: Negative frequency is valid. Positive frequency = forward run; negative frequency = reverse run. Direction can not be switched by digital keypad or external terminal control.

Pr.03-11 Analog input Gain (AVI) = 100%

Diagram 15

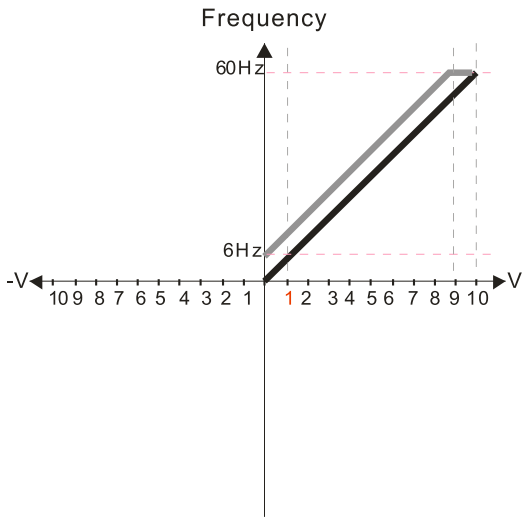

Pr.03-03=-10%
Pr.03-07–03-08 (Positive/Negative Bias Mode)

0: No bias
1: Lower than or equal bias
2: Greater than or equal to bias
3: The absolute value of the bias voltage while serving as the center
4: Bias serves as the center

Pr.03-10 (Analog Frequency Command for Reverse Run)
0: Negative frequency is not valid. Forward and reverse run is controlled by digital keyboard or external terminals.
1: Negative frequency is valid. Positive frequency = forward run; negative frequency = reverse run. Direction can not be switched by digital keypad or external terminal control.

Pr.03-11 Analog input Gain (AVI) = 100%

Diagram 16

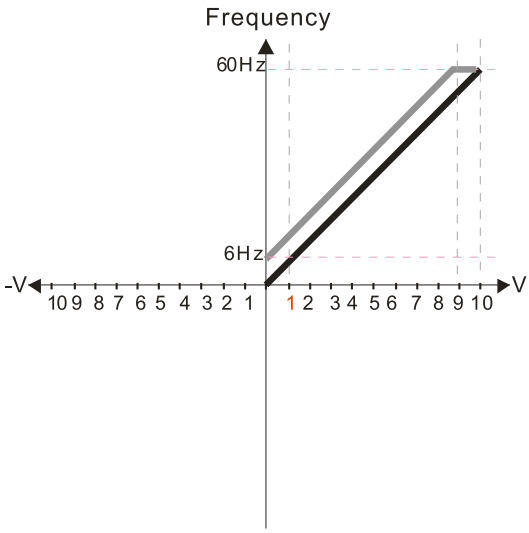

Pr.03-03=-10%
Pr.03-07–03-08 (Positive/Negative Bias Mode)

0: No bias
1: Lower than or equal bias
2: Greater than or equal to bias
3: The absolute value of the bias voltage while serving as the center
4: Bias serves as the center

Pr.03-10 (Analog Frequency Command for Reverse Run)
0: Negative frequency is not valid. Forward and reverse run is controlled by digital keyboard or external terminals.
1: Negative frequency is valid. Positive frequency = forward run; negative frequency = reverse run. Direction can not be switched by digital keypad or external terminal control.

Pr.03-11 Analog input Gain (AVI) = 100%

Diagram 17

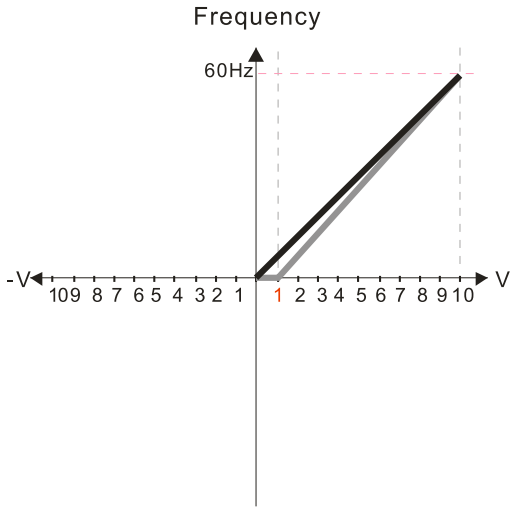

Pr.03-03=10%
Pr.03-07–03-08 (Positive/Negative Bias Mode)

0: No bias
1: Lower than or equal bias
2: Greater than or equal to bias
3: The absolute value of the bias voltage while serving as the center
4: Bias serves as the center

Pr.03-10 (Analog Frequency Command for Reverse Run)
0: Negative frequency is not valid. Forward and reverse run is controlled by digital keyboard or external terminals.
1: Negative frequency is valid. Positive frequency = forward run; negative frequency = reverse run. Direction can not be switched by digital keypad or external terminal control.

Pr.03-11 Analog input Gain (AVI) = 111.1%
10/9 = 111.1%

Diagram 18

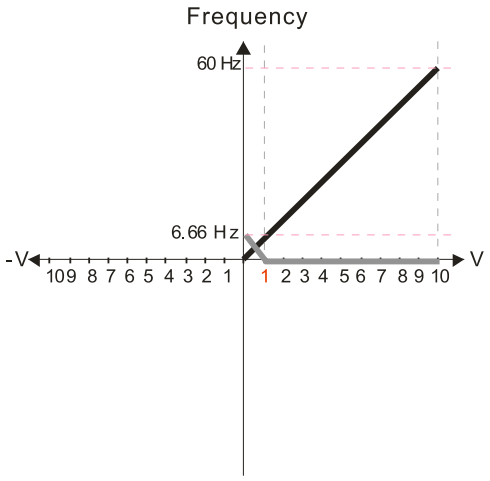

Pr.03-03=10%
Pr.03-07–03-08 (Positive/Negative Bias Mode)

0: No bias
1: Lower than or equal bias
2: Greater than or equal to bias
3: The absolute value of the bias voltage while serving as the center
4: Bias serves as the center

Pr.03-10 (Analog Frequency Command for Reverse Run)
0: Negative frequency is not valid. Forward and reverse run is controlled by digital keyboard or external terminals.
1: Negative frequency is valid. Positive frequency = forward run; negative frequency = reverse run. Direction can not be switched by digital keypad or external terminal control.

Pr.03-11 Analog input Gain (AVI) = 111.1%
10/9 = 111.1%

Diagram 19

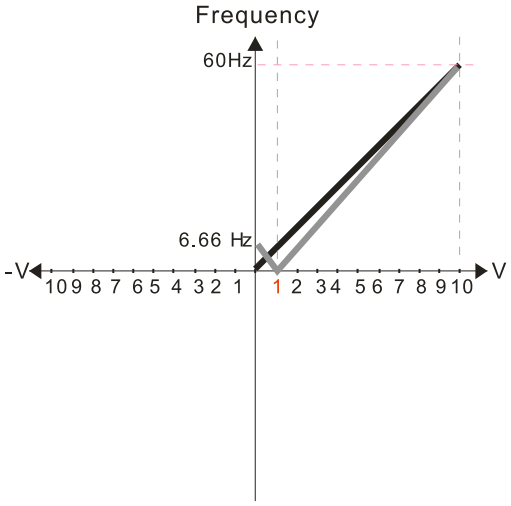

Pr.03-03=10%
Pr.03-07–03-08 (Positive/Negative Bias Mode)

0: No bias
1: Lower than or equal bias
2: Greater than or equal to bias
3: The absolute value of the bias voltage while serving as the center
4: Bias serves as the center

Pr.03-10 (Analog Frequency Command for Reverse Run)
0: Negative frequency is not valid. Forward and reverse run is controlled by digital keyboard or external terminals.
1: Negative frequency is valid. Positive frequency = forward run; negative frequency = reverse run. Direction can not be switched by digital keypad or external terminal control.

Pr.03-11 Analog input Gain (AVI) = 111.1%
10/9 = 111.1%

Diagram 20

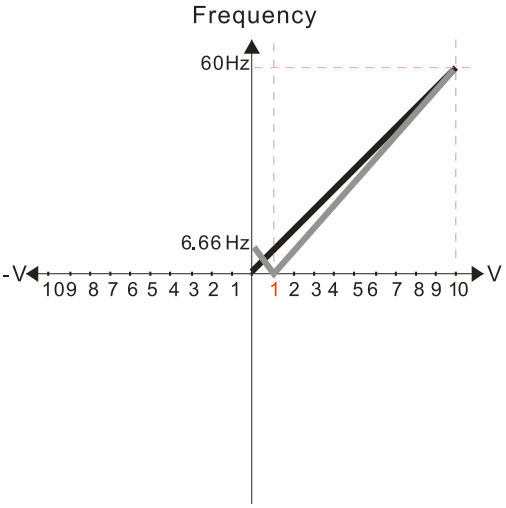

Pr.03-03=10%
Pr.03-07–03-08 (Positive/Negative Bias Mode)

0: No bias
1: Lower than or equal bias
2: Greater than or equal to bias
3: The absolute value of the bias voltage while serving as the center
4: Bias serves as the center

Pr.03-10 (Analog Frequency Command for Reverse Run)
0: Negative frequency is not valid. Forward and reverse run is controlled by digital keyboard or external terminals.
1: Negative frequency is valid. Positive frequency = forward run; negative frequency = reverse run. Direction can not be switched by digital keypad or external terminal control.

Pr.03-11 Analog input Gain (AVI) = 111.1%
10/9 = 111.1%

Diagram 21

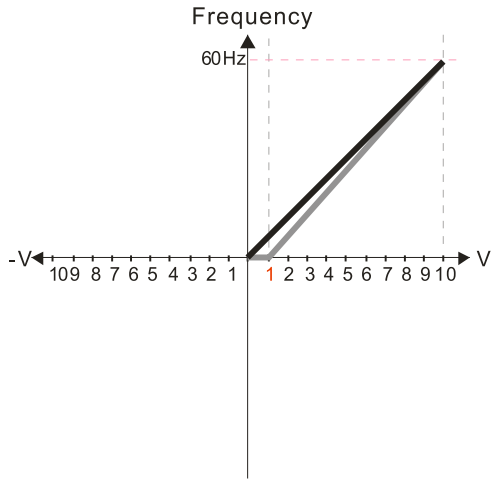

Pr.03-03=10%
Pr.03-07–03-08 (Positive/Negative Bias Mode)

0: No bias
1: Lower than or equal bias
2: Greater than or equal to bias
3: The absolute value of the bias voltage while serving as the center
4: Bias serves as the center

Pr.03-10 (Analog Frequency Command for Reverse Run)
0: Negative frequency is not valid. Forward and reverse run is controlled by digital keyboard or external terminals.
1: Negative frequency is valid. Positive frequency = forward run; negative frequency = reverse run. Direction can not be switched by digital keypad or external terminal control.

Pr.03-11 Analog input Gain (AVI) = 111.1%
10/9 = 111.1%

Diagram 22

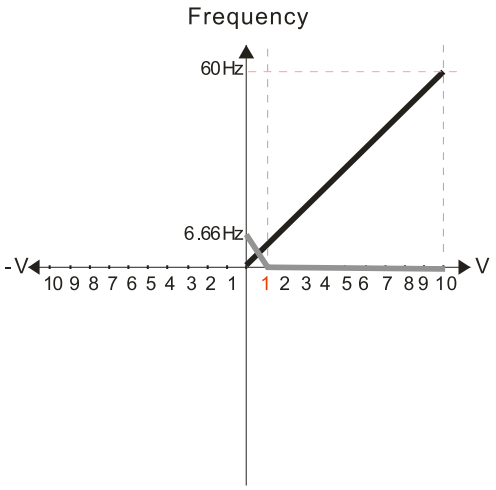

Pr.03-03=10%
Pr.03-07–03-08 (Positive/Negative Bias Mode)

0: No bias
1: Lower than or equal bias
2: Greater than or equal to bias
3: The absolute value of the bias voltage while serving as the center
4: Bias serves as the center

Pr.03-10 (Analog Frequency Command for Reverse Run)
0: Negative frequency is not valid. Forward and reverse run is controlled by digital keyboard or external terminals.
1: Negative frequency is valid. Positive frequency = forward run; negative frequency = reverse run. Direction can not be switched by digital keypad or external terminal control.

Pr.03-11 Analog input Gain (AVI) = 111.1%
10/9 = 111.1%

Diagram 23

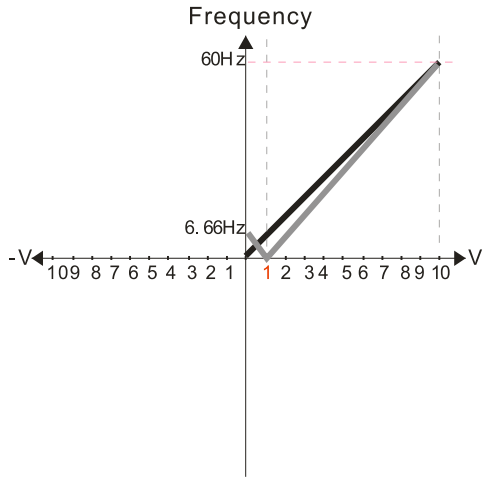

Pr.03-03=10%
Pr.03-07–03-08 (Positive/Negative Bias Mode)

0: No bias
1: Lower than or equal bias
2: Greater than or equal to bias
3: The absolute value of the bias voltage while serving as the center
4: Bias serves as the center

Pr.03-10 (Analog Frequency Command for Reverse Run)
0: Negative frequency is not valid. Forward and reverse run is controlled by digital keyboard or external terminals.
1: Negative frequency is valid. Positive frequency = forward run; negative frequency = reverse run. Direction can not be switched by digital keypad or external terminal control.

Pr.03-11 Analog input Gain (AVI) = 111.1%
10/9 = 111.1%

Diagram 24

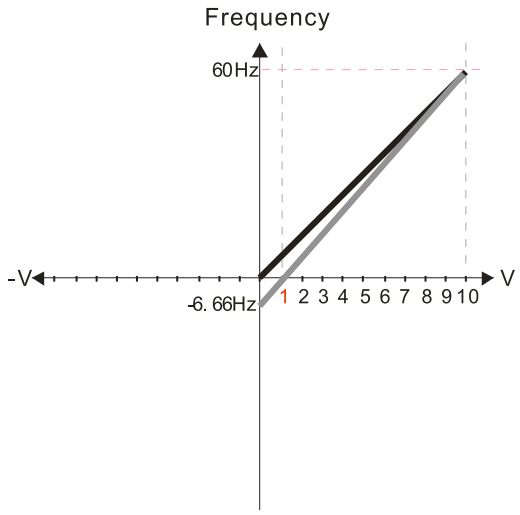

Pr.03-03=10%
Pr.03-07–03-08 (Positive/Negative Bias Mode)

0: No bias
1: Lower than or equal bias
2: Greater than or equal to bias
3: The absolute value of the bias voltage while serving as the center
4: Bias serves as the center

Pr.03-10 (Analog Frequency Command for Reverse Run)
0: Negative frequency is not valid. Forward and reverse run is controlled by digital keyboard or external terminals.
1: Negative frequency is valid. Positive frequency = forward run; negative frequency = reverse run. Direction can not be switched by digital keypad or external terminal control.

Pr.03-11 Analog input Gain (AVI) = 111.1%
10/9 = 111.1%

Diagram 25

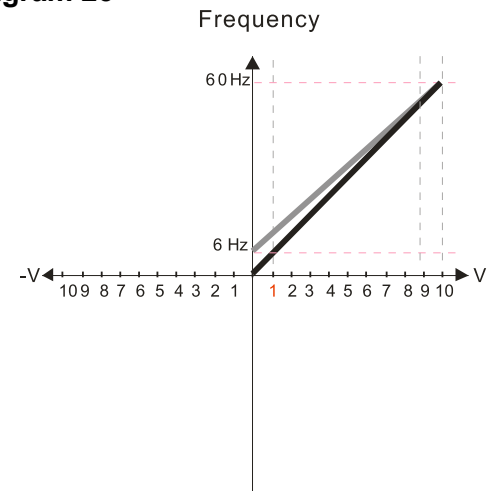

Pr.03-07–03-08 (Positive/Negative Bias Mode)

0: No bias
1: Lower than or equal bias
2: Greater than or equal to bias
3: The absolute value of the bias voltage while serving as the center
4: Bias serves as the center

Pr.03-10 (Analog Frequency Command for Reverse Run)
0: Negative frequency is not valid. Forward and reverse run is controlled by digital keyboard or external terminals.
1: Negative frequency is valid. Positive frequency = forward run; negative frequency = reverse run. Direction can not be switched by digital keypad or external terminal control.

Calculate the bias:

$$\frac{60-6\text{Hz}}{10\text{V}} = \frac{6-0\text{Hz}}{(0-X\ \text{V})} \quad XV = \frac{100}{-9} = -1.11\text{V} \quad \therefore 03\text{-}03 = \frac{-1.11}{10} \times 100\% = -11.1\ \%$$

Calculate the gain:

$$\text{Pr.03-11} = \frac{10\text{V}}{11.1\text{V}} \times 100\% = 90.0\ \%$$

Diagram 26

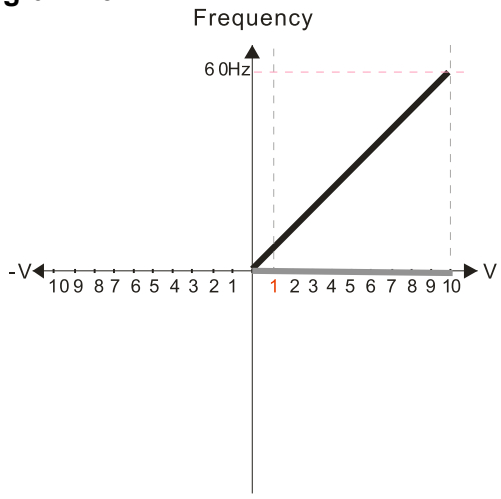

Pr.03-07–03-08 (Positive/Negative Bias Mode)

0: No bias
1: Lower than or equal bias
2: Greater than or equal to bias
3: The absolute value of the bias voltage while serving as the center
4: Bias serves as the center

Pr.03-10 (Analog Frequency Command for Reverse Run)
0: Negative frequency is not valid. Forward and reverse run is controlled by digital keyboard or external terminals.
1: Negative frequency is valid. Positive frequency = forward run; negative frequency = reverse run. Direction can not be switched by digital keypad or external terminal control.

Diagram 27

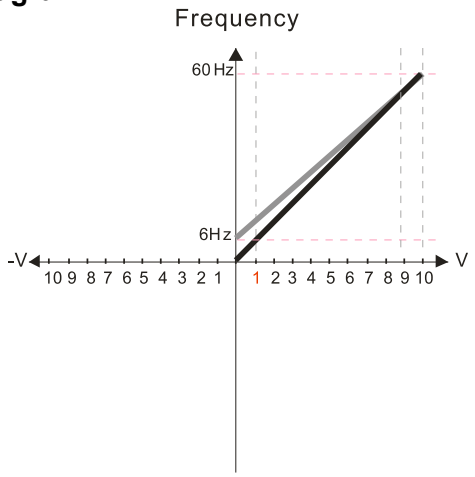

Pr.03-07–03-08 (Positive/Negative Bias Mode)

0: No bias
1: Lower than or equal bias
2: Greater than or equal to bias
3: The absolute value of the bias voltage while serving as the center
4: Bias serves as the center

Pr.03-10 (Analog Frequency Command for Reverse Run)

0: Negative frequency is not valid. Forward and reverse run is controlled by digital keyboard or external terminals.
1: Negative frequency is valid. Positive frequency = forward run; negative frequency = reverse run. Direction can not be switched by digital keypad or external terminal control.

Calculate the bias:

$$\frac{60-6\text{Hz}}{10\text{V}} = \frac{6-0\text{Hz}}{(0-X\text{V})} \quad XV = \frac{100}{-9} = -1.11\text{V} \quad \therefore 03\text{-}03 = \frac{-1.11}{10} \times 100\% = -11.1\%$$

Calculate the gain:

$$\text{Pr.03-11} = \frac{10\text{V}}{11.1\text{V}} \times 100\% = 90.0\%$$

Diagram 28

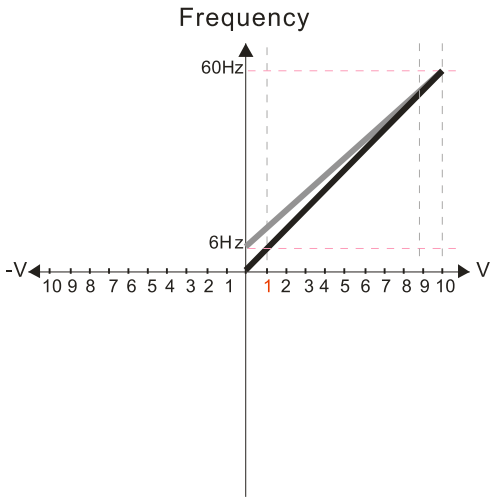

Pr.03-07–03-08 (Positive/Negative Bias Mode)

0: No bias
1: Lower than or equal bias
2: Greater than or equal to bias
3: The absolute value of the bias voltage while serving as the center
4: Bias serves as the center

Pr.03-10 (Analog Frequency Command for Reverse Run)

0: Negative frequency is not valid. Forward and reverse run is controlled by digital keyboard or external terminals.
1: Negative frequency is valid. Positive frequency = forward run; negative frequency = reverse run. Direction can not be switched by digital keypad or external terminal control.

Calculate the bias:

$$\frac{60-6\text{Hz}}{10\text{V}} = \frac{6-0\text{Hz}}{(0-X\text{V})} \quad XV = \frac{100}{-9} = -1.11\text{V} \quad \therefore 03\text{-}03 = \frac{-1.11}{10} \times 100\% = -11.1\%$$

Calculate the gain:

$$\text{Pr.03-11} = \frac{10\text{V}}{11.1\text{V}} \times 100\% = 90.0\%$$

Diagram 29

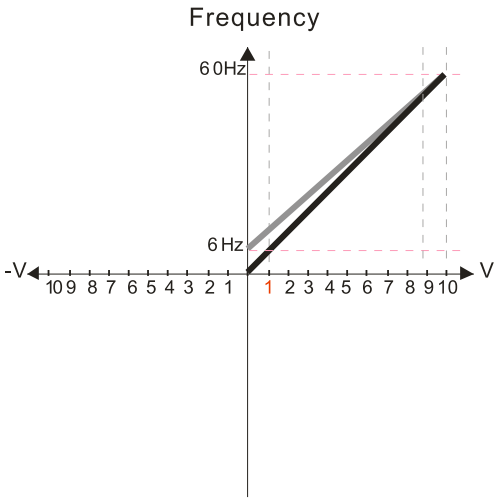

Pr.03-07–03-08 (Positive/Negative Bias Mode)

0: No bias
1: Lower than or equal bias
2: Greater than or equal to bias
3: The absolute value of the bias voltage while serving as the center
4: Bias serves as the center

Pr.03-10 (Analog Frequency Command for Reverse Run)
0: Negative frequency is not valid.
Forward and reverse run is controlled by digital keyboard or external terminals.
1: Negative frequency is valid.
Positive frequency = forward run;
negative frequency = reverse run.
Direction can not be switched by digital keypad or external terminal control.

Calculate the bias:

$$\frac{60-6\text{Hz}}{10\text{V}} = \frac{6-0\text{Hz}}{(0-\text{XV})} \quad \text{XV} = \frac{100}{-9} = -1.11\text{V} \quad \therefore 03\text{-}03 = \frac{-1.11}{10} \times 100\% = -11.1\%$$

Calculate the gain:

$$\text{Pr.03-11} = \frac{10\text{V}}{11.1\text{V}} \times 100\% = 90.0\%$$

Diagram 30

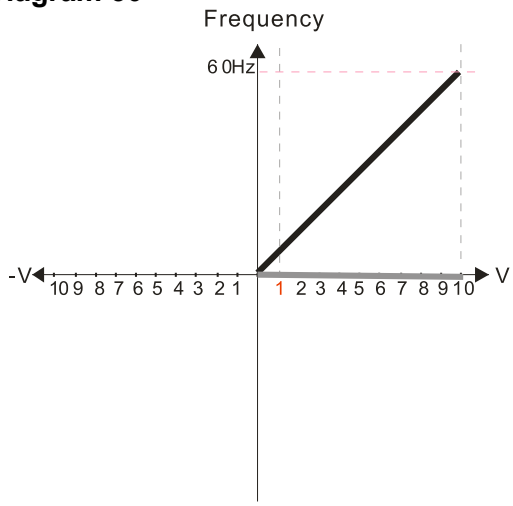

Pr.03-07–03-08 (Positive/Negative Bias Mode)

0: No bias
1: Lower than or equal bias
2: Greater than or equal to bias
3: The absolute value of the bias voltage while serving as the center
4: Bias serves as the center

Pr.03-10 (Analog Frequency Command for Reverse Run)
0: Negative frequency is not valid.
Forward and reverse run is controlled by digital keyboard or external terminals.
1: Negative frequency is valid.
Positive frequency = forward run;
negative frequency = reverse run.
Direction can not be switched by digital keypad or external terminal control.

Diagram 31

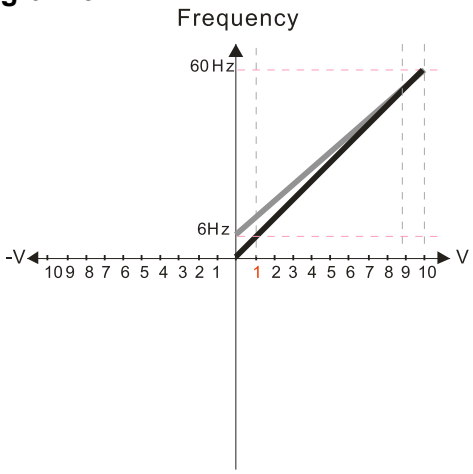

Pr.03-07–03-08 (Positive/Negative Bias Mode)

0: No bias
1: Lower than or equal bias
2: Greater than or equal to bias
3: The absolute value of the bias voltage while serving as the center
4: Bias serves as the center

Pr.03-10 (Analog Frequency Command for Reverse Run)
0: Negative frequency is not valid. Forward and reverse run is controlled by digital keyboard or external terminals.
1: Negative frequency is valid. Positive frequency = forward run; negative frequency = reverse run. Direction can not be switched by digital keypad or external terminal control.

Calculate the bias:

$$\frac{60-6Hz}{10V} = \frac{6-0Hz}{(0-XV)} \quad XV = \frac{100}{-9} = -1.11V \quad \therefore 03\text{-}03 = \frac{-1.11}{10} \times 100\% = -11.1\%$$

Calculate the gain:

$$Pr.03\text{-}11 = \frac{10V}{11.1V} \times 100\% = 90.0\%$$

Diagram 32

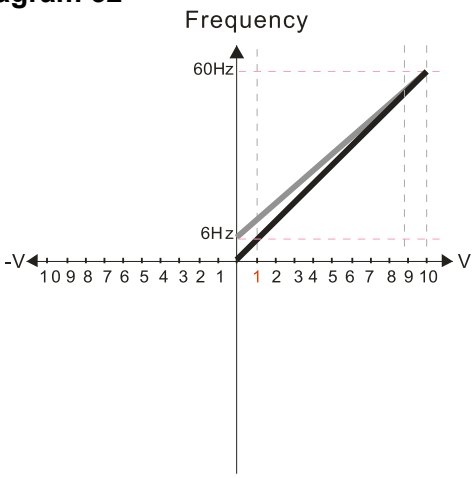

Pr.03-07–03-08 (Positive/Negative Bias Mode)

0: No bias
1: Lower than or equal bias
2: Greater than or equal to bias
3: The absolute value of the bias voltage while serving as the center
4: Bias serves as the center

Pr.03-10 (Analog Frequency Command for Reverse Run)
0: Negative frequency is not valid. Forward and reverse run is controlled by digital keyboard or external terminals.
1: Negative frequency is valid. Positive frequency = forward run; negative frequency = reverse run. Direction can not be switched by digital keypad or external terminal control.

Calculate the bias:

$$\frac{60-6Hz}{10V} = \frac{6-0Hz}{(0-XV)} \quad XV = \frac{100}{-9} = -1.11V \quad \therefore 03\text{-}03 = \frac{-1.11}{10} \times 100\% = -11.1\%$$

Calculate the gain:

$$Pr.03\text{-}11 = \frac{10V}{11.1V} \times 100\% = 90.0\%$$

03-11 AVI Analog Input Gain
03-12 ACI Analog Input Gain

Default: 100.0

Settings -500.0–500.0%

Pr.03-03–03-12 are used when the Frequency command source is the analog voltage or current signal.

03-15 AVI Analog Input Filter Time
03-16 ACI Analog Input Filter Time

Default: 0.01

Settings 0.00–20.00 sec.

- Analog signals, such as those entering AVI and ACI, are commonly affected by interference that affects the stability of the analog control. Use the Input Noise Filter to create a more stable system.
- When the time constant setting is too large, the control is stable but the control response is slow. When the time constant setting is too small, the control response is faster but the control may be unstable. For optimal setting, adjust the setting based on the control stability or the control response.

03-18 Analog Input Addition Function

Default: 0

Settings 0: Disable (AVI, ACI)
1: Enable (excludes analog extension card)

- When Pr.03-18 = 1:
  Example: Pr.03-00 = Pr.03-01 = 1, Frequency command = AVI + ACI
- When Pr.03-18 = 0 and the analog input selection settings (Pr.03-00 and Pr.03-01) are the same, AVI has priority over ACI. In other words, when Pr.03-00 and Pr.03-01 are both set to 1 (Frequency command), the drive ignores the setting value from ACI but execute the Frequency command according to the setting value from AVI.

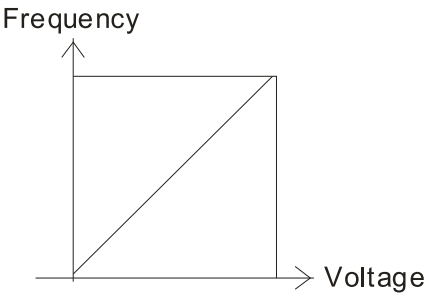

$$Fcmd = [(ay \pm bias) \times gain] \times \frac{Fmax(01\text{-}00)}{10V \text{ or } 16mA \text{ or } 20mA}$$

Fcmd: the corresponding frequency of 10V or 20mA

ay : 0~10V, 4~20mA, 0~20mA
bias : Pr.03-03, Pr. 03-04
gain : Pr.03-11, Pr.03-12

03-19 Signal Loss Selection for the Analog Input 4–20 mA

Default: 0

Settings 0: Disable
1: Continue operation at the last frequency
2: Decelerate to 0 Hz
3: Stop immediately and display “ACE”

- Determines the treatment when the 4–20 mA signal is lost (ACIc (Pr.03-29 = 0)).
- When Pr.03-29 ≠ 0, the voltage input to ACI terminal is 0–10 V or 0–20 mA, and Pr.03-19 is invalid.
- When the setting is 1 or 2, the keypad displays the warning code “ANL”. It keeps blinking until the ACI signal is recovered.
- When the drive stops, the condition that causes the warning does not exist, so the warning automatically disappears.

03-20 AFM Multi-Function Output

Default: 0

Settings 0–23

Summary of Function Settings

Settings	Functions	Descriptions
0	Output frequency (Hz)	Maximum frequency Pr.01-00 is processed as 100%.
1	Frequency command (Hz)	Maximum frequency Pr.01-00 is processed as 100%.
2	Motor speed (Hz)	Maximum frequency Pr.01-00 is processed as 100%.
3	Output current (rms)	(2.5 × drive rated current) is processed as 100%.
4	Output voltage	(2 × motor rated voltage) is processed as 100%.
5	DC bus voltage	230 V models: 450V = 100% 460 V models: 900V = 100% 575 V models: 1125V = 100%
6	Power factor	-1.000–1.000 = 100%
7	Power	(2 × drive rated power) is processed as 100%.
8	Output torque	Full-load torque = 100%
9	AVI	0–10 V = 0–100%
10	ACI	4–20 mA = 0–100%
12	Iq current command	(2.5 × drive rated current) is processed as 100%.
13	Iq feedback value	(2.5 × drive rated current) is processed as 100%.
14	Id current command	(2.5 × drive rated current) is processed as 100%.
15	Id feedback value	(2.5 × rated current) is processed as 100%.
16	Vq-axis voltage command	230 V models: 250 V = 100% 460 V models: 500 V = 100% 575 V models: 625 V = 100%
17	Vd-axis voltage command	230 V models: 250 V = 100% 460 V models: 500 V = 100% 575 V models: 625 V = 100%
18	Torque command	Motor rated torque = 100%
19	PG2 frequency command	Maximum operation frequency (Pr.01-00) is processed as 100%.
20	CANopen analog output	For CANopen communication analog output Terminal: AFM, Address: 2026-A1
21	RS-485 analog output	For RS-485 (Modbus) control analog output Terminal: AFM, Address: 26A0H
22	Communication card analog output	For communication analog output (CMM-EIP01, CMM-PN01, CMM-DN01) Terminal: AFM, Address: 26A0H
23	Constant voltage output	Pr.03-32 controls the voltage output level. 0–100% of Pr.03-32 corresponds to 0–10 V for AFM.

03-21 AFM Analog Output Gain

Default: 100.0

Settings 0.0–500.0%

Adjusts the voltage level outputted to the analog meter from the analog signal (Pr.03-20) output terminal AFM of the drive.

03-22 AFM Analog Output in REV Direction

Default: 0

Settings 0: Absolute value in output voltage

1: Reverse output 0 V; forward output 0–10 V

2: Reverse output 5–0 V; forward output 5–10 V

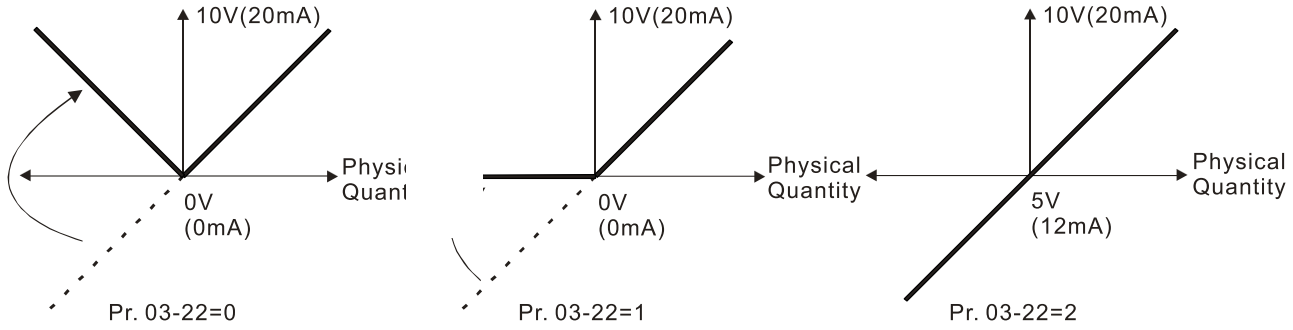

Selections for the analog output direction

03-27 AFM Output Bias

Default: 0.00

Settings -100.00–100.00%

Example 1: AFM 0–10 V is set to the output frequency, the output equation is

$$10\text{ V} \times \left(\frac{\text{Output Frequency}}{\text{Pr.01-00}}\right) \times \text{Pr.03-21} + 10\text{ V} \times \text{Pr.03-27}$$

Example 2: AFM 0–20 mA is set to the output frequency, the output equation is

$$20\text{ mA} \times \left(\frac{\text{Output Frequency}}{\text{Pr.01-00}}\right) \times \text{Pr.03-21} + 20\text{ mA} \times \text{Pr.03-27}$$

Example 3: AFM 4–20 mA is set to the output frequency, the output equation is

$$4\text{ mA} + 16\text{ mA} \times \left(\frac{\text{Output Frequency}}{\text{Pr.01-00}}\right) \times \text{Pr.03-21} + 16\text{ mA} \times \text{Pr.03-27}$$

This parameter sets the corresponding voltage of the analog output 0.

03-28 AVI Terminal Input Selection

Default: 0

Settings 0: 0–10 V (Pr.03-63–Pr.03-68 is valid)

3: -10–10 V (Pr.03-69–Pr.03-74 are valid)

03-29 ACI Terminal Input Selection

Default: 0

Settings 0: 4–20 mA

1: 0–10 V

2: 0–20 mA

- When you change the input mode, verify that the external terminal switch (ACI) position is correct.
- When you change the setting, proportion to the corresponding AVI and ACI will change to default.

03-30 PLC Analog Output Terminal Status

Default: Read only

Settings Monitor the status of the PLC analog output terminals

bit 0: AFM

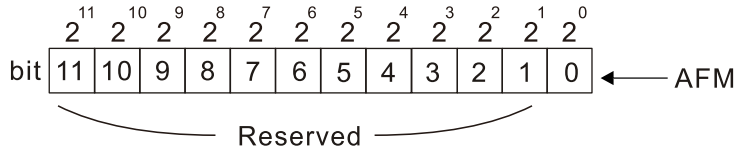

0=OFF
1=ON

NOTE

2^{11} = 2048	2^{10} = 1024	2^{9} = 512	2^{8} = 256
2^{7} = 128	2^{6} = 64	2^{5} = 32	2^{4} = 16
2^{3} = 8	2^{2} = 4	2^{1} = 2	2^{0} = 1

- Example:

  When Pr.03-30 displays 0001 (hex) (that is, the value is 1 (decimal) and 1 (binary)), it means that AFM is used by PLC.

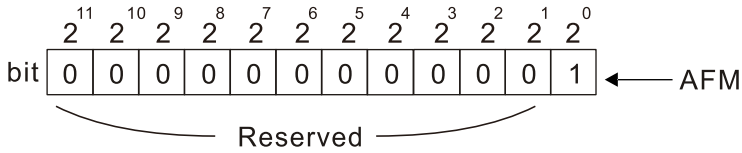

Setting
= bit 0 x 2^{0}
= 1 x 1
= 1

0=OFF
1=ON

NOTE

2^{11} = 2048	2^{10} = 1024	2^{9} = 512	2^{8} = 256
2^{7} = 128	2^{6} = 64	2^{5} = 32	2^{4} = 16
2^{3} = 8	2^{2} = 4	2^{1} = 2	2^{0} = 1

03-31 AFM Output Selection

Default: 0

Settings 0: 0–10 V output
1: 0–20 mA output
2: 4–20 mA output

03-32 AFM DC Output Setting Level

Default: 0.00

Settings 0.00–100.00%

03-35 AFM Output Filter Time

Default: 0.01

Settings 0.00–20.00 sec.

03-39 VR Input Selection

Default: 1

Settings 0: Disable
1: Frequency command

- VR is the abbreviation for Variable Resistor; it is the potentiometer of the keyboard panel KPMS-LE01.

03-40 VR Input Bias

Default: 0.0

Settings -100–100%

03-41 VR Positive / Negative Bias

Default: 0

Settings 0: No bias
1: Lower than or equal to bias
2: Greater than or equal to bias
3: The absolute value of the bias voltage while serving as the center
4: Bias serves as the center

03-42 VR Gain

Default: 100.0

Settings -500.0–500.0%

03-43 VR Filter Time

Default: 0.01

Settings 0.00–2.00 sec.

03-44 Multi-Function Output (MO) by AI Level Source

Default: 0

Settings 0: AVI
1: ACI

03-45 AI Upper Level

Default: 50

Settings -100.00–100.00%

03-46 AI Lower Level

Default: 10

Settings -100.00–100.00%

- Multi-function output terminal 67 must work with Pr.03-44 to select input channels. When analog input level is higher than Pr.03-45, multi-function output acts; when analog input level is lower than Pr.03-46, multi-function output terminals stop outputting.
- When setting levels, AI upper level must be higher than AI lower level.

03-50 Analog Input Curve Selection

Default: 0

Settings 0: Normal curve
1: Three-point curve of AVI
2: Three-point curve of ACI
3: Three-point curve of AVI & ACI

03-57 ACI Lowest Point

Default: 4.00

Settings Pr.03-29 = 1, 0.00–10.00 V
Pr.03-29 ≠ 1, 0.00–20.00 mA

03-58 ACI Proportional Lowest Point

Default: 0.00

Settings 0.00–100.00%

03-59 ACI Mid-point

Default: 12.00

Settings Pr.03-29 = 1, 0.00–10.00 V
Pr.03-29 ≠ 1, 0.00–20.00 mA

03-60 ACI Proportional Mid-point

Default: 50.00

Settings 0.00–100.00%

03-61 ACI Highest Point

Default: 20.00

Settings Pr.03-29 = 1, 0.00–10.00 V
Pr.03-29 ≠ 1, 0.00–20.00 mA

03-62 ACI Proportional Highest Point

Default: 100.00

Settings 0.00–100.00%

- When Pr.03-29 = 1, the ACI setting is 0–10 V and the unit is voltage (V).
  When Pr.03-29 ≠ 1, the ACI setting is 0–20 mA or 4–20 mA and the unit is current (mA).
- When you set the analog input ACI to the Frequency command, 100% corresponds to Fmax (Pr.01-00 Maximum Operation Frequency).
- The requirement for these three parameters (Pr.03-57, Pr.03-59 and Pr.03-61) is Pr.03-57 < Pr.03-59 < Pr.03-61. The values for three proportional points (Pr.03-58, Pr.03-60 and Pr.03-62) have no limits. There is a linear calculation between two points.
- The output percentage becomes 0% when the ACI input value is lower than the lowest point setting.
  Example: If Pr.03-57 = 2 mA; Pr.03-58 = 10%, then the output becomes 0% when the ACI input is ≤ 2 mA. If the ACI input swings between 2 mA and 2.1 mA, the drive's output frequency oscillates between 0% and 10%.

03-63 AVI Voltage Lowest Point

Default: 0.00

Settings 0.00–10.00 V

03-64 AVI Proportional Lowest Point

Default: 0.00

Settings -100.00–100.00%

03-65 AVI Voltage Mid-point

Default: 5.00

Settings 0.00–10.00 V

03-66 AVI Proportional Mid-point

Default: 50.00

Settings -100.00–100.00%

03-67 AVI Voltage Highest Point

Default: 10.00

Settings 0.00–10.00 V

03-68 AVI Proportional Highest Point

Default: 100.00

Settings -100.00–100.00%

- When you set the positive voltage AVI to the Frequency command, 100% corresponds to Fmax (Pr.01-00 Maximum Operation Frequency) and the motor runs in the forward direction.
- The requirement for these three parameters (Pr.03-63, Pr.03-65 and Pr.03-67) is Pr.03-63 < Pr.03-65 < Pr.03-67. The values for three proportional points (Pr.03-64, Pr.03-66 and Pr.03-68) have no limits. There is a linear calculation between two points.
- The output percentage becomes 0 % when the positive voltage AVI input value is lower than the lowest point setting.
  Example: If Pr.03-63 = 1 V; Pr.03-64 = 10%, then the output becomes 0% when the AVI input is ≤ 1 V. If the AVI input swings between 1 V and 1.1 V, the drive's output frequency oscillates between 0% and 10%.

03-69 Negative AVI Voltage Lowest Point

Default: 0.00

Settings -10.00–0.00 V
(valid when Pr.03-28 sets as -10–10 V)

03-70 Negative AVI Proportional Lowest Point

Default: 0.00

Settings -100.00–100.00%
(valid when Pr.03-28 sets as -10–10 V)

03-71 Negative AVI Voltage Mid-point

Default: -5.00

Settings -10.00–0.00 V
(valid when Pr.03-28 sets as -10–10 V)

03-72 Negative AVI Proportional Mid-point

Default: -50.00

Settings -100.00–100.00%
(valid when Pr.03-28 sets as -10–10 V)

03-73 Negative AVI Voltage Highest Point

Default: -10.00

Settings -10.00–0.00 V
(valid when Pr.03-28 sets as -10–10 V)

03-74 Negative AVI Proportional Highest Point

Default: -100.00

Settings -100.00–100.00%
(valid when Pr.03-28 sets as -10–10 V)

- When you set the negative voltage AVI to the Frequency command, -100% corresponds to Fmax (Pr.01-00 Maximum Operation Frequency) and the motor runs in the reverse direction.
- The requirement for these three parameters (Pr.03-69, Pr.03-71 and Pr.03-73) is Pr.03-69 < Pr.03-71 < Pr.03-73, the values for three proportional points (Pr.03-70, Pr.03-72 and Pr.03-74) have no limits. There is a linear calculation between two points.
- The output percentage becomes 0% when the negative voltage AVI input value is lower than the lowest point setting.
  Example: If Pr.03-69 = -1 V; Pr.03-70 = 10%, then the output becomes 0% when the AVI input is ≥ -1 V. If the AVI input swings between -1 V and -1.1 V, drive's output frequency oscillates between 0% and 10%.

04 Multi-Step Speed Parameters

✓ You can set this parameter during operation.

✓	**04-00**	1st Step Speed Frequency
✓	**04-01**	2nd Step Speed Frequency
✓	**04-02**	3rd Step Speed Frequency
✓	**04-03**	4th Step Speed Frequency
✓	**04-04**	5th Step Speed Frequency
✓	**04-05**	6th Step Speed Frequency
✓	**04-06**	7th Step Speed Frequency
✓	**04-07**	8th Step Speed Frequency
✓	**04-08**	9th Step Speed Frequency
✓	**04-09**	10th Step Speed Frequency
✓	**04-10**	11th Step Speed Frequency
✓	**04-11**	12th Step Speed Frequency
✓	**04-12**	13th Step Speed Frequency
✓	**04-13**	14th Step Speed Frequency
✓	**04-14**	15th Step Speed Frequency

Default: 0.00

Settings 0.00–599.00 Hz

📖 Use the multi-function input terminals (refer to settings 1–4 of Pr.02-01–02-07 Multi-function Input Command) to select the multi-step speed command (the maximum is 15th step speed). Pr.04-00 to Pr.04-14 sets the multi-step speed (frequency) as shown in the following diagram.

📖 The external terminal/digital keypad/communication controls the RUN and STOP commands with Pr.00-21.

📖 You can set each multi-step speed between 0.00–599.00 Hz during operation.

📖 Explanation for the timing diagram of the multi-step speed and external terminals

The related parameter settings are:

162. Pr.04-00–Pr.04-14: sets the 1st–15th multi-step speed (to set the frequency of each step speed).
163. Pr.02-01–Pr.02-07: sets the multi-function input terminals (multi-step speed command 1–4).

📖 Related parameters:

- Pr.01-22 JOG frequency setting
- Pr.02-01 multi-function input command 1 (MI1)
- Pr.02-02 multi-function input command 2 (MI2)
- Pr.02-03 multi-function input command 3 (MI3)
- Pr.02-04 multi-function input command 4 (MI4)

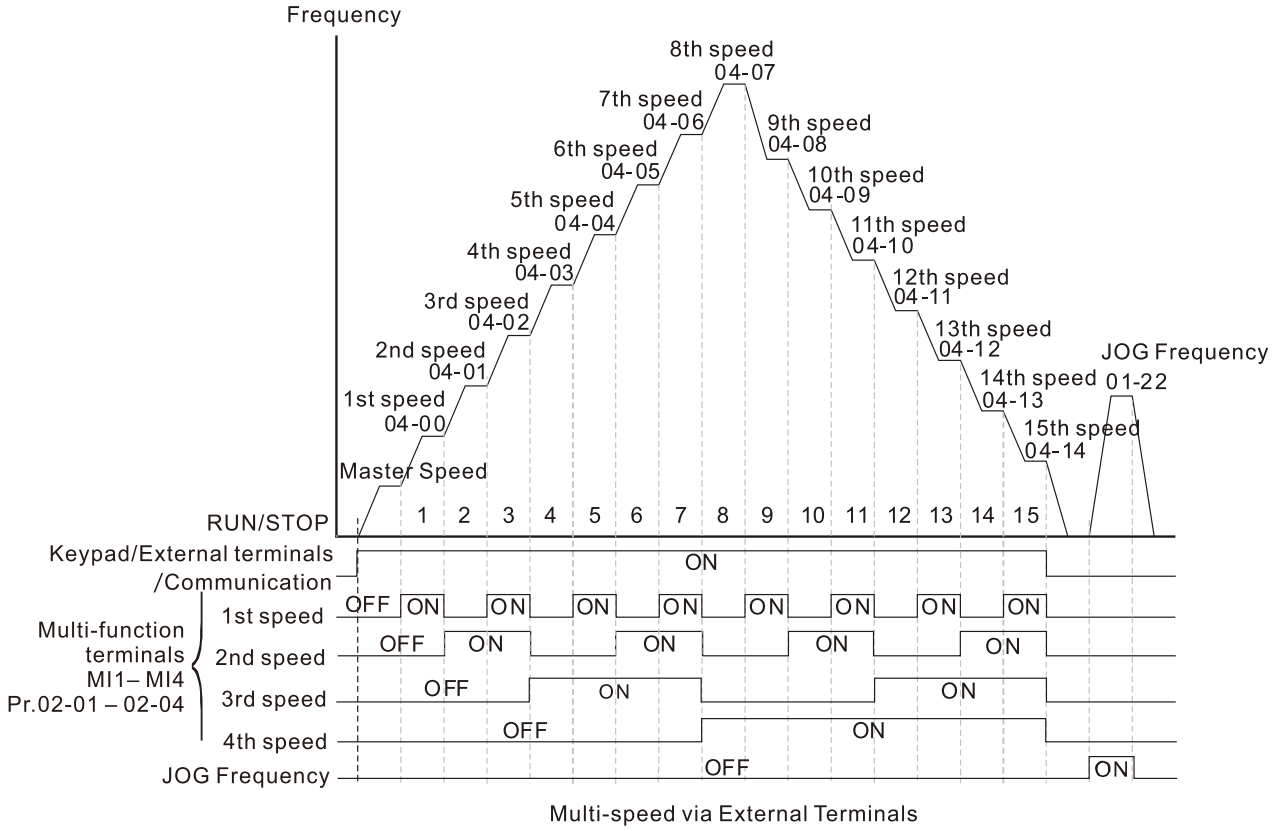

✓	**04-50**	PLC Buffer 0
✓	**04-51**	PLC Buffer 1
✓	**04-52**	PLC Buffer 2
✓	**04-53**	PLC Buffer 3
✓	**04-54**	PLC Buffer 4
✓	**04-55**	PLC Buffer 5
✓	**04-56**	PLC Buffer 6
✓	**04-57**	PLC Buffer 7
✓	**04-58**	PLC Buffer 8
✓	**04-59**	PLC Buffer 9
✓	**04-60**	PLC Buffer 10
✓	**04-61**	PLC Buffer 11
✓	**04-62**	PLC Buffer 12
✓	**04-63**	PLC Buffer 13
✓	**04-64**	PLC Buffer 14
✓	**04-65**	PLC Buffer 15
✓	**04-66**	PLC Buffer 16
✓	**04-67**	PLC Buffer 17
✓	**04-68**	PLC Buffer 18
✓	**04-69**	PLC Buffer 19

Default: 0

Settings 0–65535

You can combine the PLC buffer with the built-in PLC function for a variety of applications.

05 Motor Parameters

In this parameter group, the following are abbreviations for different types of motors:

- IM: Induction motor
- PM: Permanent magnet synchronous AC motor
- IPM: Interior permanent magnet synchronous AC motor
- SPM: Surface permanent magnet synchronous AC motor

You can set this parameter during operation.

05-00 Motor Parameter Auto-Tuning

Default: 0

Settings 0: No function
1: Dynamic test for induction motor (IM)
2: Static test for induction motor (IM)
5: Rolling auto-tuning for PM (IPM / SPM)
12: FOC sensorless inertia estimation
13: High frequency stall test for PM synchronous motor

05-01 Full-Load Current for Induction Motor 1 (A)

Default: Depending on the model power

Settings 10–120% of the drive's rated current

Sets this value according to the rated current of the motor as indicated on the motor nameplate. The default is 90% of the drive's rated current.
Example: The rated current for a 7.5 HP (5.5 kW) motor is 25 A. The default is 22.5 A.
The setting range is 2.5–30 A (25 × 10% = 2.5 A and 25 × 120% = 30 A).

05-02 Rated Power for Induction Motor 1 (kW)

Default: Depending on the model power

Settings 0.00–655.35 kW

Sets the rated power for motor 1. The default is the drive's power value.

05-03 Rated Speed for Induction Motor 1 (rpm)

Default: Depending on the motor's number of poles

Settings 0–xxxxx rpm (Depending on the motor's number of poles)
1710 (60 Hz 4 poles); 1410 (50 Hz 4 poles)

Sets the rated speed for the motor as indicated on the motor nameplate.

05-04 Number of Poles for Induction Motor 1

Default: 4

Settings 2–20

Sets the number of poles for the motor (must be an even number).

Set up Pr.01-01 and Pr.05-03 before setting up Pr.05-04 to ensure that the motor operates normally.

05-05 No-Load Current for Induction Motor 1 (A)

Default: Depending on the model power

Settings 0.00–Pr.05-01 default

The default is 40% of the motor's rated current.

05-06 Stator Resistance (Rs) for Induction Motor 1

Default: Depending on the model power

Settings 0.000–65.535 Ω

05-07 Rotor Resistance (Rr) for Induction Motor 1

Default: 0.000

Settings 0.000–65.535 Ω

05-08 Magnetizing Inductance (Lm) for Induction Motor 1

05-09 Stator Inductance (Lx) for Induction Motor 1

Default: 0.0

Settings 0.0–6553.5 mH

05-13 Full-Load Current for Induction Motor 2 (A)

Default: Depending on the model power

Settings 10–120% of the drive's rated current

Set this value according to the rated current of the motor as indicated on the motor nameplate. The default is 90% of the drive's rated current.

Example: The rated current for a 7.5 HP (5.5 kW) motor is 25 A. The default is 22.5 A.

The setting range is 2.5–30 A (25 × 10% = 2.5 A and 25 × 120% = 30 A).

05-14 Rated Power for Induction Motor 2 (kW)

Default: Depending on the model power

Settings 0.00–655.35 kW

Sets the rated power for motor 2. The default is the drive's power value.

05-15 Rated Speed for Induction Motor 2 (rpm)

Default: Depending on the motor's number of poles

Settings 0–xxxxx rpm (Depending on the motor's number of poles)
1710 (60 Hz 4 poles); 1410 (50 Hz 4 poles)

Sets the rated speed for the motor as indicated on the motor nameplate.

05-16 Number of Poles for Induction Motor 2

Default: 4

Settings 2–20

Sets the number of poles for the motor (must be an even number).

Set up Pr.01-35 and Pr.05-15 before setting up Pr.05-16 to ensure that the motor operates normally.

05-17 No-load Current for Induction Motor 2 (A)

Default: Depending on the model power

Settings 0.00–Pr.05-13 default

The default is 40% of the motor's rated current.

05-18 Stator Resistance (Rs) for Induction Motor 2

Default: Depending on the model power

Settings 0.000–65.535 Ω

05-19 Rotor Resistance (Rr) for Induction Motor 2

Default: 0.000

Settings 0.000–65.535 Ω

05-20 Magnetizing Inductance (Lm) for Induction Motor 2

05-21 Stator Inductance (Lx) for Induction Motor 2

Default: 0.0

Settings 0.0–6553.5 mH

05-22 Multi-Motor (Induction) Selection

Default: 1

Settings 1: Motor 1
2: Motor 2
3: Motor 3 (VF or SVC control mode only)
4: Motor 4 (VF or SVC control mode only)

Sets the motor operated by the AC motor drive. Multi-motor selection only supports single control mode. For example, when you set motor 1 as SVC control mode, the control mode of motors 2–4 are also set as SVC.

05-23 Frequency for Y-connection /Δ-connection Switch for an Induction Motor

Default: 60.00

Settings 0.00–599.00 Hz

05-24 Y-connection /Δ-connection Switch for an Induction Motor

Default: 0

Settings 0: Disable
1: Enable

05-25 Delay Time for Y-connection/Δ-connection Switch for an Induction Motor

Default: 0.200

Settings 0.000–60.000 sec.

- You can apply Pr.05-23–Pr.05-25 in wide range motors, and the motor coil executes the Y-connection/Δ-connection switch as required. The wide range motors are related to the motor design. In general, the motor has higher torque with low speed Y-connection and has higher speed with high speed Δ-connection.
- Pr.05-24 enables and disables the switch of Y-connection/Δ-connection.
- When you set Pr.05-24 to 1, the drive uses the Pr.05-23 setting and current motor frequency, and switches the current motor to Y-connection or Δ-connection. You can switch the relevant motor parameter settings simultaneously.
- Pr.05-25 sets the switch delay time of Y-connection/Δ-connection.
- When the output frequency reaches the Y-connection/Δ-connection switch frequency, the drive delays according to Pr.05-25 before activating the multi-function output terminals.

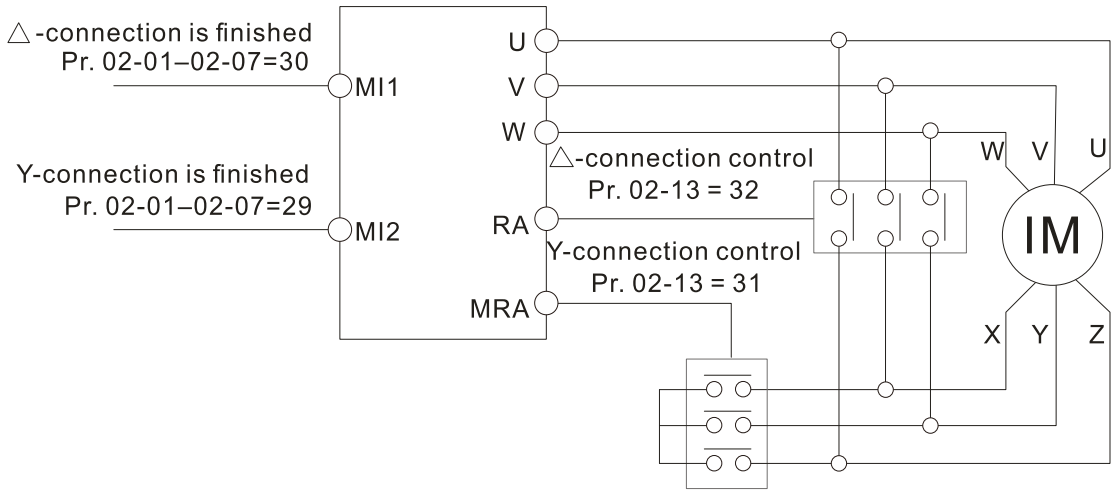

Y- △connection switch: can be used for wide range motor
Y -connection for low speed: higher torque can be used for rigid tapping
△-connection for high speed: higher speed can be used for high-speed drilling

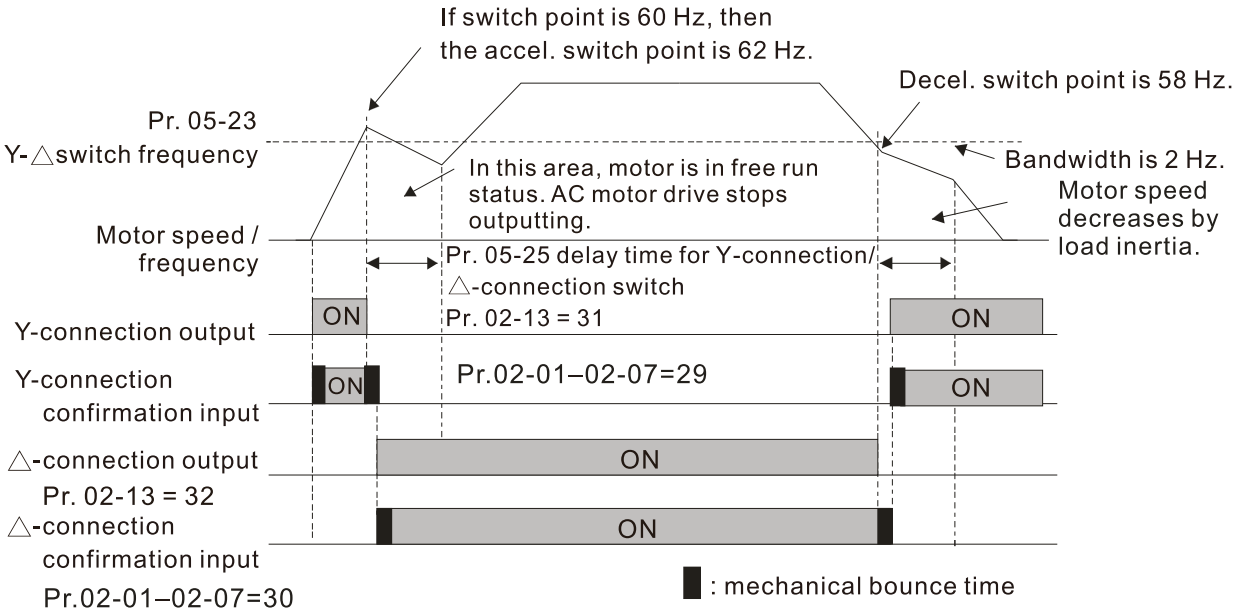

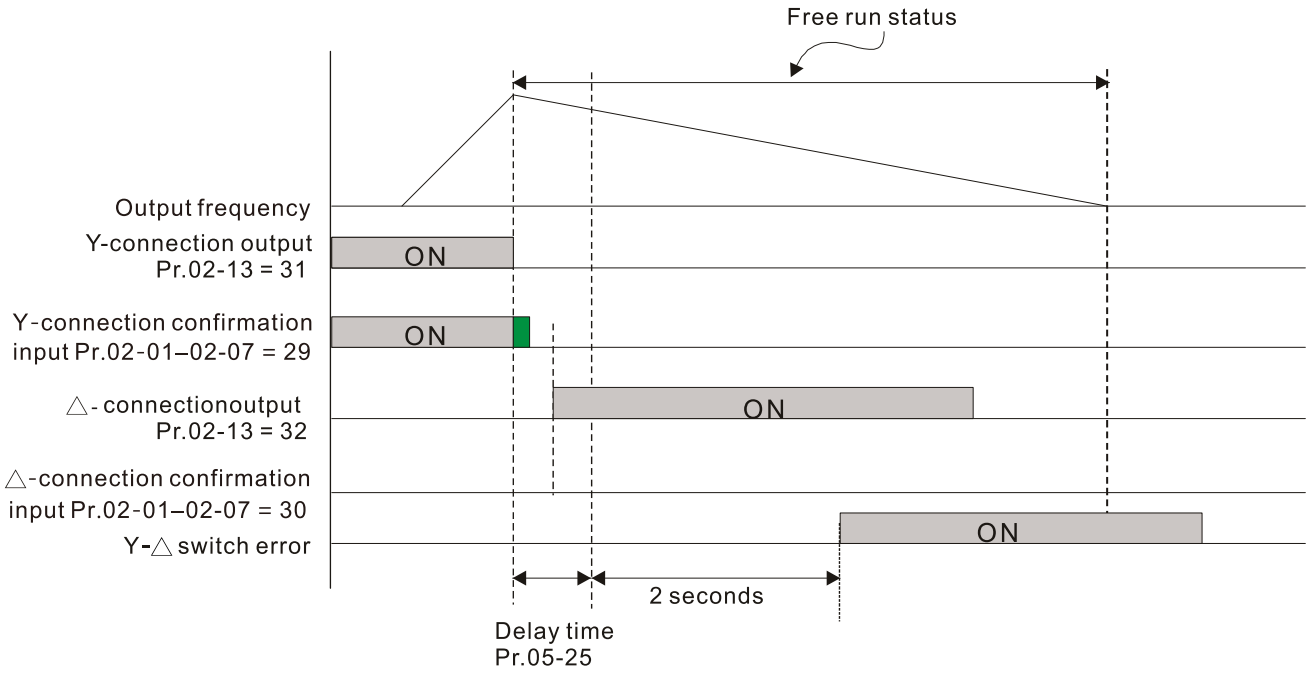

05-26 Accumulated Watt-second for a Motor in Low Word (W-msec.)

05-27 Accumulated Watt-second for a Motor in High Word (W-sec.)

05-28 Accumulated Watt-hour for a Motor (W-hour)

05-29 Accumulated Watt-hour for a Motor in Low Word (kW-hour)

05-30 Accumulated Watt-hour for a Motor in High Word (MW-hour)

Default: 0.0

Settings Read only

- Pr.05-26–05-30 records the amount of power the motors consume. The accumulation begins when the drive is activated and the record is saved when the drive stops or turns OFF. The amount of consumed watts continues to accumulate when the drive is activated again. To clear the accumulation, set Pr.00-02 to 5 to return the accumulation record to 0.
- The accumulated total watts of the motor per second = Pr.05-27 × 65536 + Pr.05-26
- Example: when Pr.05-26 = 2548.1 and Pr.05-27 = 15.2, the accumulated total watts of the motor per second = 15.2 × 65536 + 2548.1 = 996147.2 + 2548.1 = 998695.3
- The accumulated total kilowatts of the motor per hour = Pr.05-30 × 65536 + Pr.05-29
- Example: when Pr.05-29 = 3361.4 and Pr.05-30 = 11.2, the accumulated total kilowatts of the motor per hour = 11.2 × 65536 + 3361.4 = 734003.2 + 3361.4 = 737364.6

05-31 Accumulated Motor Operation Time (minutes)

Default: 0

Settings 0–1439

05-32 Accumulated Motor Operation Time (days)

Default: 0

Settings 0–65535

- Use Pr.05-31 and Pr.05-32 to record the motor operation time. To clear the operation time, set Pr.05-31 and Pr.05-32 to 0. An operation time shorter than 60 seconds is not recorded.

05-33 Induction Motor (IM) or Permanent Magnet Synchronous AC Motor Selection

Default: 0

Settings 0: IM (Induction motor)
1: SPM (Surface permanent magnet synchronous AC motor)
2: IPM (Interior permanent magnet synchronous AC motor)

05-34 Full-load Current for a Permanent Magnet Synchronous AC Motor

Default: Depending on the model power

Settings 0–120% of the drive's rated current

05-35 Rated Power for a Permanent Magnet Synchronous AC Motor

Default: Depending on the motor power

Settings 0.00–655.35 kW

Sets the rated power for the permanent magnet synchronous AC motor. The default is the drive's power value.

05-36 Rated Speed for a Permanent Magnet Synchronous AC Motor

Default: 2000

Settings 0–65535 rpm

05-37 Number of Poles for a Permanent Magnet Synchronous AC Motor

Default: 10

Settings 0–65535

05-39 Stator Resistance for a Permanent Magnet Synchronous AC Motor

Default: 0.000

Settings 0.000–65.535 Ω

05-40 Permanent Magnet Synchronous AC Motor Ld

Default: 0.00

Settings 0.00–655.35 mH

05-41 Permanent Magnet Synchronous AC Motor Lq

Default: 0.00

Settings 0.00–655.35 mH

05-43 Ke parameter of a Permanent Magnet Synchronous AC Motor

Default: 0

Settings 0–65535 V/krpm

05-51 Motor Code

Default: 0

Settings 0–65535

When using Delta MSI Motor, set Pr.05-51 according to the corresponding setting value in the table below to complete motor auto-tuning.

MSI Motor Spec. (Rated Speed 1500 rpm)		Drive Parameter / Default	MSI Motor Spec. (Rated Speed 3000 rpm)		Drive Parameter / Default
Model	Power (kW)	Pr.05-51 Motor Code (User set)	Model	Power (kW)	Pr.05-51 Motor Code (User set)
MSI75B-15CDXS2□1A	0.75	1004	MSI75B-30CDXS2□1A	0.75	1204
MSI11C-15CDXS2□1A	1.1	1005	MSI11C-30CDXS2□1A	1.1	1205
MSI15C-15CDXS2□1A	1.5	1006	MSI15C-30CDXS2□1A	1.5	1206
MSI22C-15CDXS2□1A	2.2	1007	MSI22C-30CDXS2□1A	2.2	1207
MSI30C-15CDXS2□1A	3	1008	MSI30C-30CDXS2□1A	3	1208
MSI40C-15CDXS2□1A	4	1010	MSI40C-30CDXS2□1A	4	1210
MSI55C-15CDXS2□1A	5.5	1011	MSI55C-30CDXS2□1A	5.5	1211
MSI75C-15CDXS2□1A	7.5	1012	MSI75C-30CDXS2□1A	7.5	1212
MSI11D-15CDXS2□1A	11	1013	MSI11D-30CDXS2□1A	11	1213
MSI15D-15CDXS2□1A	15	1014	MSI15D-30CDXS2□1A	15	1214
MSI18D-15CDXS2□1A	18.5	1015	MSI18D-30CDXS2□1A	18.5	1215
MSI22D-15CDXS2□1A	22	1016	MSI22D-30CDXS2□1A	22	1216

05-64 Full-load Current for Induction Motor 3 (A)

Default: Depending on the model power

Settings 10–120% of the drive's rated current

Set this value according to the rated current of the motor as indicated on the motor nameplate. The default is 90% of the drive's rated current.

Example: The rated current for a 7.5 HP (5.5 kW) motor is 25 A. The default is 22.5 A.

The setting range is 2.5–30 A (25 × 10% = 2.5 A and 25 × 120% = 30 A).

05-65 Rated Power for Induction Motor 3 (kW)

Default: Depending on the model power

Settings 0.00–655.35 kW

Sets the rated power for motor 3. The default is the drive's power value.

05-66 Rated Speed for Induction Motor 3 (rpm)

Default: Depending on the motor's number of poles

Settings 0–xxxxx rpm (Depending on the motor's number of poles)
1710 (60 Hz 4 poles); 1410 (50 Hz 4 poles)

Sets the rated speed for the motor as indicated on the motor nameplate.

05-67 Number of Poles for Induction Motor 3

Default: 4

Settings 2–20

Sets the number of poles for the motor (must be an even number).

Set up Pr.01-54 and Pr.05-66 before setting up Pr.05-67 to ensure that the motor operates normally.

05-68 No-load Current for Induction Motor 3 (A)

Default: Depending on the model power

Settings 0.00–Pr.05-64 default

The default is 40% of the motor's rated current.

05-69 Stator Resistance (Rs) for Induction Motor 3

Default: Depending on the model power

Settings 0.000–65.535 Ω

05-70 Full-load Current for Induction Motor 4 (A)

Default: Depending on the model power

Settings 10–120% of the drive's rated current

Set this value according to the rated current of the motor as indicated on the motor nameplate. The default is 90% of the drive's rated current.
Example: The rated current for a 7.5 HP (5.5 kW) motor is 25 A. The default is 22.5 A.
The setting range is 2.5–30 A (25 × 10% = 2.5 A and 25 × 120% = 30 A).

05-71 Rated Power for Induction Motor 4 (kW)

Default: Depending on the model power

Settings 0.00–655.35 kW

Sets the rated power for motor 4. The default is the drive's power value.

05-72 Rated Speed for Induction Motor 4 (rpm)

Default: Depending on the motor's number of poles

Settings 0–xxxxx rpm (Depending on the motor's number of poles)
1710 (60 Hz 4 poles); 1410 (50 Hz 4 poles)

Sets the rated speed for the motor as indicated on the motor nameplate.

05-73 Number of Poles for Induction Motor 4

Default: 4

Settings 2–20

Sets the number of poles for the motor (must be an even number).

Set up Pr.01-63 and Pr.05-72 before setting up Pr.05-73 to make sure the motor operates normally.

05-74 No-load Current for Induction Motor 4 (A)

Default: Depending on the model power

Settings 0.00–Pr.05-70 default

The default is 40% of the motor's rated current.

05-75 Stator Resistance (Rs) for Induction Motor 4

Default: Depending on the model power

Settings 0.000–65.535 Ω

[This page intentionally left blank]

06 Protection Parameters (1)

You can set this parameter during operation.

06-00 Low Voltage Level

Default: 180.0 / 360.0 / 450.0

Settings 115V / 230V models: 150.0–220.0 V_{DC}
460V models: 300.0–440.0 V_{DC}
575V models: 375.0–550.0 V_{DC}

Sets the Low Voltage (LV) level. When the DC bus voltage is lower than Pr.06-00, a LV fault is triggered, and the drive stops output then the motor coasts to a stop.

If the LV fault is triggered during operation, the drive stops output and the motor coasts to a stop. There are three LV faults, LvA (LV during acceleration), Lvd (LV during deceleration), and Lvn (LVin constant speed) that are triggered according to the status of acceleration or deceleration. You must press RESET to clear the LV fault. The drive automatically restarts if set to restart after momentary power loss (refer to Pr.07-06 Restart after Momentary Power Loss and Pr.07-07 Allowed Power Loss Duration for details).

If the LV fault is triggered when the drive is in STOP status, the drive displays LvS (LV during stop), which is not recorded, and the drive restarts automatically when the input voltage is higher than the LV level of 30 V (230V models), 60 V (460V models) or 75V (575 models).

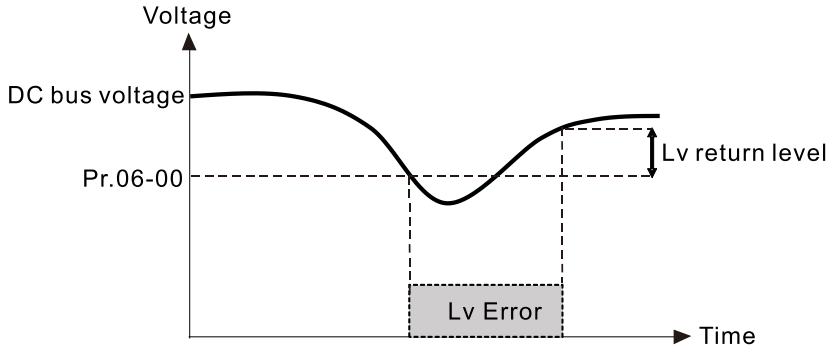

06-01 Over-Voltage Stall Prevention

Default: 380.0 / 760.0 / 975.0

Settings 0: Disabled
115V / 230V models: 0.0–400.0 V_{DC}
460V models: 0.0–800.0 V_{DC}
575V models: 0.0–1000.0 V_{DC}

Setting Pr.06-01 to 0.0 disables the over-voltage stall prevention function (connected with braking unit or brake resistor). Use this setting when braking units or brake resistors are connected to the drive.

Setting Pr.06-01 to a value > 0.0 enables the over-voltage stall prevention. This setting refers to the power supply system and loading. If the setting is too low, then over-voltage stall prevention is easily activated, which may increase deceleration time.

OV stall corresponds to the over-voltage level:

Voltage	OV Stall		OV Level
	Default	Setting Range	Default (Read Only)
230V models	380.0 V_{DC}	0.0–400.0 V_{DC}	410.0 V_{DC}
460V models	760.0 V_{DC}	0.0–800.0 V_{DC}	820.0 V_{DC}
575V models	975.0 V_{DC}	0.0–1000.0 V_{DC}	1020.0 V_{DC}

Related parameters:

- Pr.01-13, Pr.01-15, Pr.01-17, Pr.01-19 Deceleration Time 1–4
- Pr.02-13 Multi-function Output 1 (Relay 1)
- Pr.02-16–Pr.02-17 Multi-function Output 2–3 (MO1, MO2)
- Pr.06-02 Selection for Over-voltage Stall Prevention.

06-02 Selection for Over-Voltage Stall Prevention

Default: 0

Settings 0: Traditional over-voltage stall prevention
1: Smart over-voltage stall prevention

Use this function when you are unsure about the load inertia. When stopping under normal load, the over-voltage does not occur during deceleration and meet the deceleration time setting. Sometimes it may not stop due to over-voltage during decelerating to STOP when the load regenerative inertia increases. In this case, the AC motor drive extends the deceleration time automatically until the drive stops.

When you set Pr.06-02 to 0, during deceleration the motor exceeds the synchronous speed due to load inertia. In this case, the motor becomes an electrical generator. The DC bus voltage may exceed its maximum allowable value due to motor regeneration in some situations, such as motor's loading inertia being too high or drive's deceleration time being set too short. When you enable traditional over-voltage stall prevention and the DC bus voltage detected is too high, the drive stops decelerating (output frequency remains unchanged) until the DC bus voltage drops below the setting value.

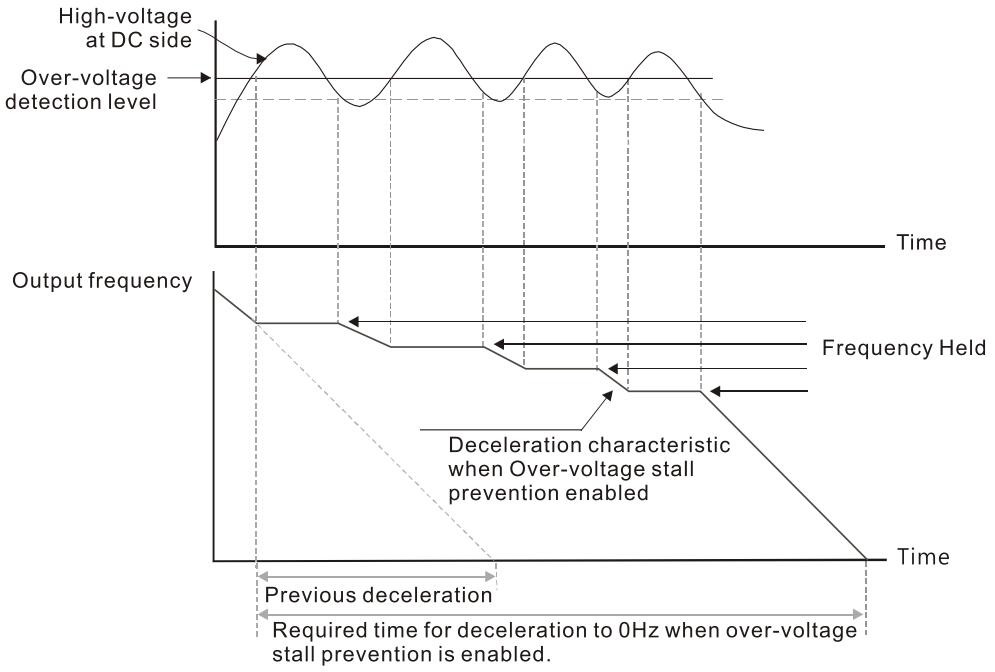

When you set Pr.06-02 to 1 to use smart over-voltage stall prevention during deceleration, the drive maintains the DC bus voltage when decelerating and prevents the drive from OV.

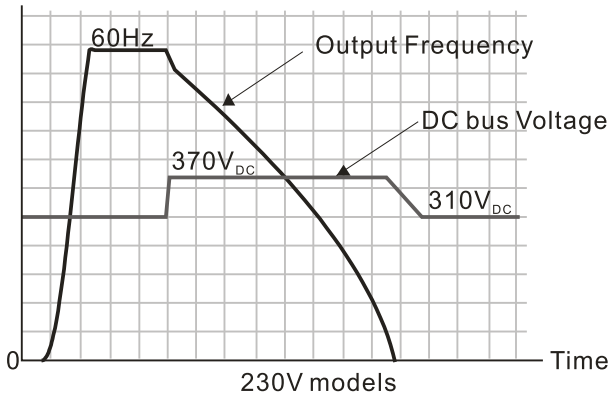

When you enable the over-voltage stall prevention, the drive's deceleration time is longer than the setting. If you encounter any problem with the deceleration time, refer to the following guides for troubleshooting.

164. Increase the deceleration time to a proper value.
165. Install a brake resistor (refer to Section 7-1 Brake Resistors and Brake Units Used in AC Motor Drives for details) to dissipate the electrical energy that is generated from the motor.

Related parameters:

- Pr.01-13, Pr.01-15, Pr.01-17, Pr.01-19 Deceleration Time 1–4
- Pr.02-13 Multi-function Output 1 (Relay 1)
- Pr.02-16–Pr.02-17 Multi-function Output 2–3 (MO1, MO2)
- Pr.06-01 Over-voltage Stall Prevention.

06-03 Over-Current Stall Prevention during Acceleration

Default: 120 / 180

Settings Normal load: 0–150%
(100% corresponds to the rated current of the drive)
Heavy load: 0–200%
(100% corresponds to the rated current of the drive)

If the motor load is too large or the drive's acceleration time is too short, the output current of the drive may be too high during acceleration, and it may cause motor damage or trigger the drive's protection functions (OL or OC). Use this parameter to prevent these situations.

During acceleration, the output current of the drive may increase abruptly and exceed the setting value of Pr.06-03. In this case, the drive stops accelerating and keeps the output frequency constant, and then continues to accelerate until the output current decreases.

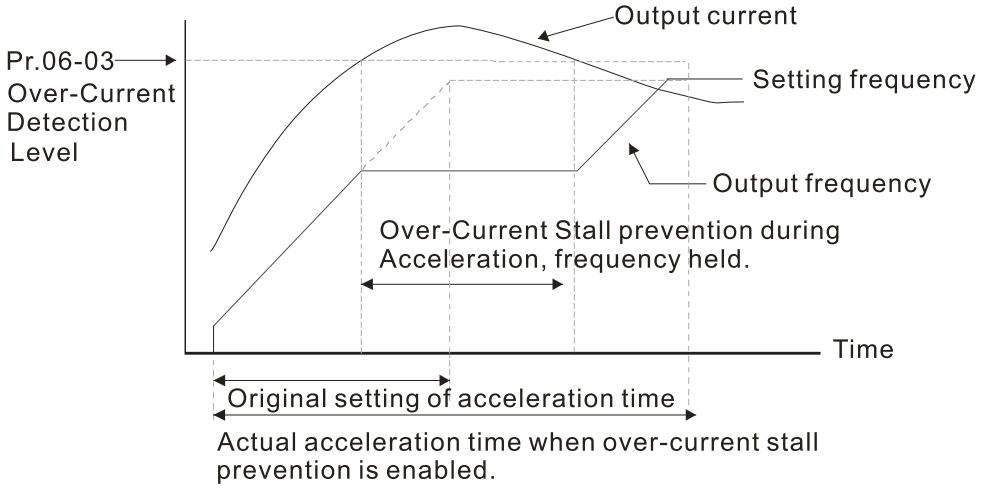

Refer to Pr.06-16 for the stall level in flux weakening region. The protection curve:

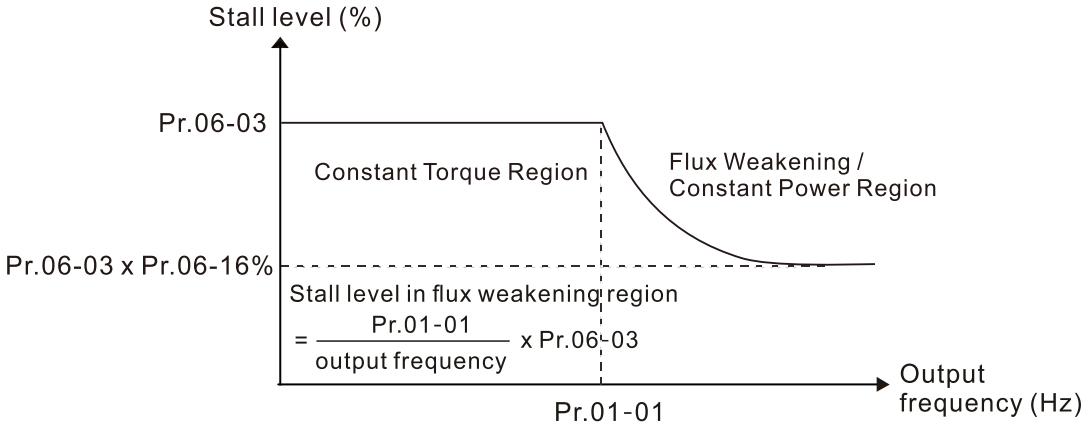

When you enable the over-current stall prevention, the drive's acceleration time is longer than the setting.

When the over-current stall prevention occurs because the motor capacity is too small or operates in the default, decrease the Pr.06-03 setting value.

If you encounter any problem with the acceleration time, refer to the following guides for troubleshooting.

1. Increase the deceleration time to a proper value.
2. Set Pr.01-44 Auto-Acceleration and Auto-Deceleration Setting to 1, 3 or 4 (auto-acceleration).
3. Relate parameters:
   - Pr.01-12, 01-14, 01-16, 01-18 (Acceleration Time 1–4)
   - Pr.01-44 Auto-Acceleration and Auto-Deceleration Setting
   - Pr.02-13 Multi-function Output 1 (Relay 1)
   - Pr.02-16–02-17 Multi-function Output 2–3 (MO1, MO2)

06-04 Over-Current Stall Prevention during Operation

Default: 120 / 180

Settings Normal load: 0–150%
(100% corresponds to the rated current of the drive)
Heavy load: 0–200%
(100% corresponds to the rated current of the drive)

- This is a protection for the drive to decrease output frequency automatically when the motor overloads abruptly during constant motor operation.
- If the output current exceeds the setting value for Pr.06-04 when the drive is operating, the drive decelerates according to the Pr.06-05 setting to prevent the motor from stalling. The lower limit for the over-current stall prevention is determined by the maximum value among 0.5 Hz, Pr.01-07 and Pr.01-11.
- If the output current is lower than the setting value for Pr.06-04, the drive accelerates (according to Pr.06-05) again to the setting frequency.

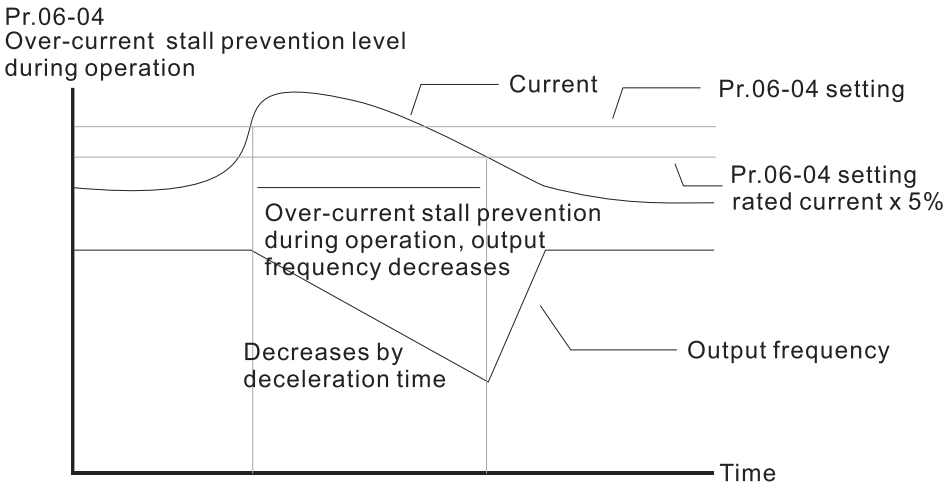

Over-current stall prevention at constant speed

06-05 Acceleration/Deceleration Time Selection for Stall Prevention at Constant Speed

Default: 0

Settings 0: By current acceleration / deceleration time
1: By the first acceleration / deceleration time
2: By the second acceleration / deceleration time
3: By the third acceleration / deceleration time
4: By the fourth acceleration / deceleration time
5: By auto-acceleration / auto-deceleration

- Sets the acceleration / deceleration time selection when stall prevention occurs at constant speed.

06-06 Over-Torque Detection Selection (Motor 1)

Default: 0

Settings 0: No function
1: Continue operation after over-torque detection during constant speed operation
2: Stop after over-torque detection during constant speed operation
3: Continue operation after over-torque detection during RUN
4: Stop after over-torque detection during RUN

06-09 Over-Torque Detection Selection (Motor 2)

Default: 0

Settings 0: No function
1: Continue operation after over-torque detection during constant speed operation
2: Stop after over-torque detection during constant speed operation
3: Continue operation after over-torque detection during RUN
4: Stop after over-torque detection during RUN

- When you set Pr.06-06 and Pr.06-09 to 1 or 3, a warning message displays but there is no error record.
- When you set Pr.06-06 and Pr.06-09 to 2 or 4, an error message displays and there is an error record.

06-07 Over-Torque Detection Level (Motor 1)

Default: 120

Settings 10–250% (100% corresponds to the rated current of the drive)

06-08 Over-Torque Detection Time (Motor 1)

Default: 0.1

Settings 0.1–60.0 sec.

06-10 Over-Torque Detection Level (Motor 2)

Default: 120

Settings 10–250% (100% corresponds to the rated current of the drive)

06-11 Over-Torque Detection Time (Motor 2)

Default: 0.1

Settings 0.1–60.0 sec.

- When the output current exceeds the over-torque detection level (Pr.06-07 or Pr.06-10) and also exceeds the over-torque detection time (Pr.06-08 or Pr.06-11), the over-torque detection follows the setting of Pr.06-06 and Pr.06-09.
- When you set Pr.06-06 or Pr.06-09 to 1 or 3, an ot1 / ot2 warning displays while the drive keeps running after over-torque detection. The warning remains on until the output current is smaller than 5% of the over-torque detection level.

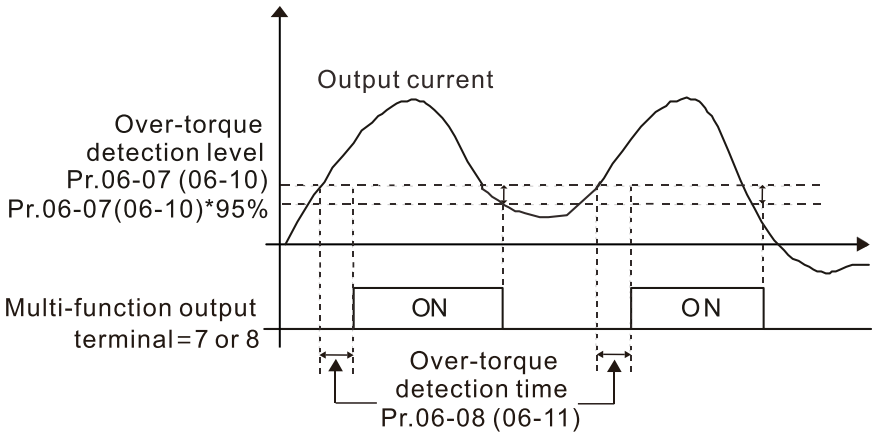

When you set Pr.06-06 or Pr.06-09 to 2 or 4, an ot1 / ot2 warning displays and the drive stops running after over-torque detection. The drive does not run until you manually reset it.

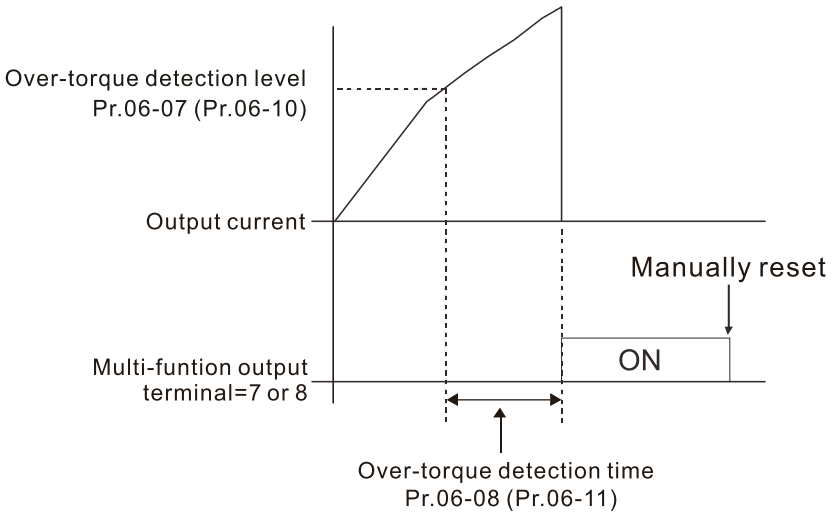

06-12 Current Limit

Default: 150

Settings 0–250% (100% corresponds to the rated current of the drive)

Set the maximum output current of the drive. Use Pr.11-17–11-20 to set the drive's output current limit.

06-13 Electronic Thermal Relay Selection 1 (Motor 1)
06-27 Electronic Thermal Relay Selection 2 (Motor 2)

Default: 2

Settings 0: Inverter motor (with external forced cooling)
1: Standard motor (motor with fan on the shaft)
2: Disable

Prevents self-cooled motor from overheating under low speed. Use an electronic thermal relay to limit the drive's output power.

Setting the parameter to 0 is suitable for an inverter motor (motor fan using an independent power supply). For this kind of motor, there is no significant correlation between cooling capacity and motor speed. Therefore, the action of electronic thermal relays remains stable in low speed to ensure the load capability of the motor in low speed.

- Setting the parameter to 1 is suitable for standard motor (motor fan is fixed on the rotor shaft). For this kind of motor, the cooling capacity is lower in low speed; therefore, the action of an electronic thermal relay reduces the action time to ensure the life of motor.
- When the power is cycled frequently, if the power is switched OFF, the electronic thermal relay protection is reset; therefore, even setting the parameter to 0 or 1 may not protect the motor well. If there are several motors connected to one drive, install an electronic thermal relay in each motor.

06-14 Electronic Thermal Relay Action Time 1 (Motor 1)

06-28 Electronic Thermal Relay Action Time 2 (Motor 2)

Default: 60.0

Settings 30.0–600.0 sec.

- Set the parameter to 150% of Pr.05-01 motor rated current and use with the setting of Pr.06-14 and Pr.06-28 to prevent motor damage due to overheating. When it reaches the setting, the drive displays “EoL1 / EoL2”, and the motor coasts to stop.
- Use this parameter to set the action time of the electronic thermal relay. It works based on the I2t characteristic curve of electronic thermal relay, the output frequency and current of the drive, and the operation time to prevent the motor from overheating.

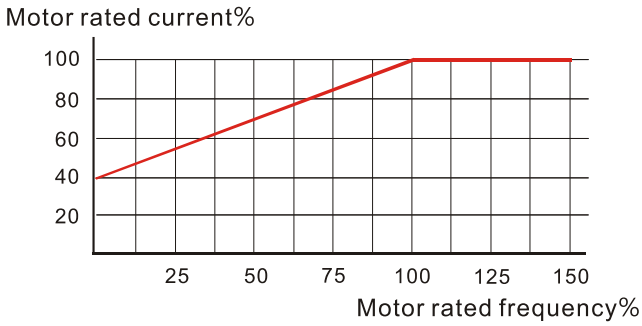

Motor cooling curve with shaft-fixed fan

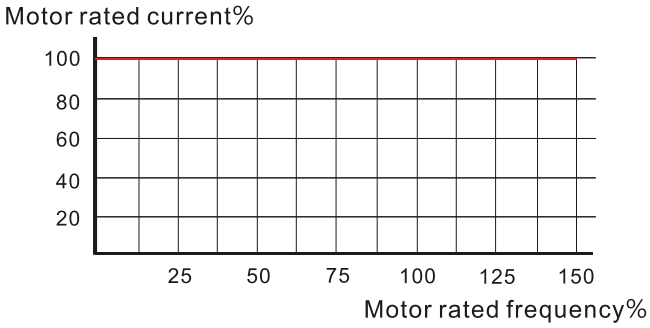

Motor cooling curve with independent fan

- The action of the electronic thermal relay depends on the settings for Pr.06-13 and Pr.06-27.
  1. Pr.06-13 or Pr.06-27 is set to 0 (using inverter motor):
     When the output current of the drive is higher than 150% of the motor rated current (refer to the motor rated current % corresponded to the motor rated frequency in the motor cooling curve with independent fan), the drive starts to count the time. The electronic thermal relay acts when the accumulated time exceeds Pr.06-14 or Pr.06-28.
  2. Pr.06-13 or Pr.06-27 is set to 1 (using standard motor):
     When the output current of the drive is higher than 150% of the motor rated current (refer to the motor rated current % corresponded to the motor rated frequency in the motor cooling curve with shaft-fixed fan), the drive starts to count the time. The electronic thermal relay acts when the accumulated time exceeds Pr.06-14 or Pr.06-28.
     The actual electronic thermal relay action time adjusts according to the drive output current (shown as the motor loading rate %). The action time is short when the current is high, and the action time is long when the current is low. Refer to the following diagram.

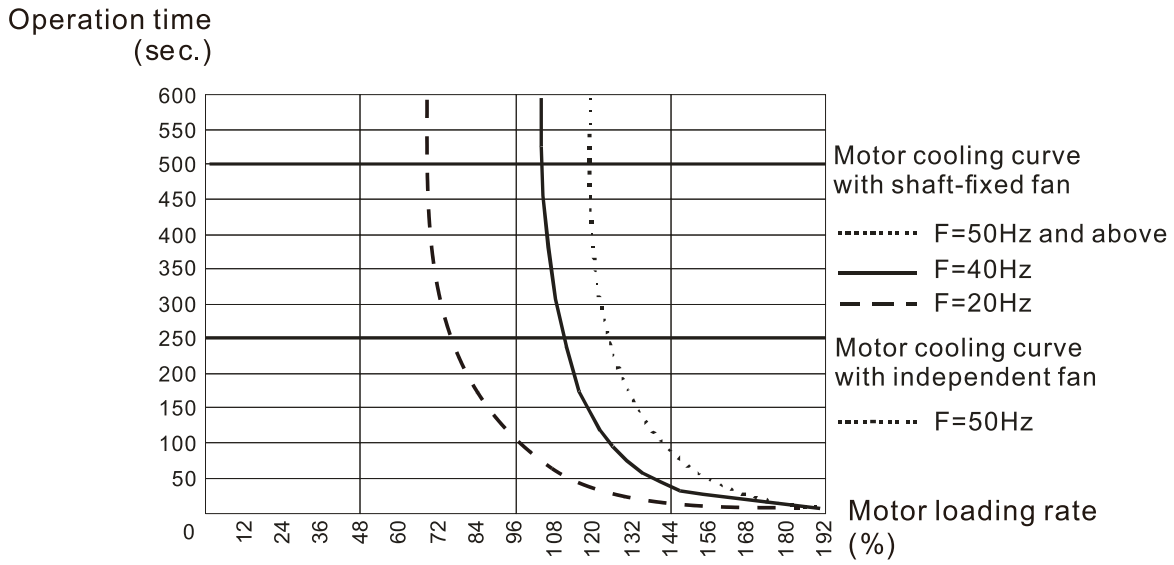

06-15 Temperature Level Overheat (OH) Warning

Default: Depending on the model power

Settings 0.0–110.0ºC

- Sets the drive's internal IGBT overheat warning level. When the temperature is higher than Pr.06-15 setting, the oH1 fault displays and the warning remains but it does not affect the drive operation.
- Use this parameter to check the motor overheat in advance in order to take precautionary measures to decrease the temperature and maintain the motor's normal operation.
- If you set the temperature 5ºC higher than the maximum setting value for Pr.06-15, IGBT overheating occurs and the drive stops. Refer to Chapter 14 oH1 fault descriptions for details.

06-16 Stall Prevention Limit Level (Weak Magnetic Field Current Stall Prevention Level)

Default: 100

Settings 0–100% (Refer to Pr.06-03, Pr.06-04)

- This parameter only works in VF, VFPG, and SVC control mode.
- Sets the over-current stall prevention level when the motor's operation frequency is larger than Pr.01-01 (base frequency). This parameter only works during acceleration.
- Example: When Pr.06-03 = 150%, Pr.06-04 = 100% and Pr.06-16 = 80%, when the operation frequency is larger than Pr.01-01 (Base motor frequency), the lowest over-current stall prevention level during acceleration is:
  Pr.06-03 × Pr.06-16 = 150 × 80% = 120% (Refer to Pr.06-03 diagram for the protective curve.)

06-17 Fault Record 1

06-18 Fault Record 2

06-19 Fault Record 3

06-20 Fault Record 4

06-21 Fault Record 5

06-22 Fault Record 6

Default: 0

Settings

0: No fault record

1: Over-current during acceleration (ocA)

2: Over-current during deceleration (ocd)

3: Over-current during steady operation (ocn)

4: Ground fault (GFF)

6: Over-current at stop (ocS)

7: Over-voltage during acceleration (ovA)

8: Over-voltage during deceleration (ovd)

9: Over-voltage during constant speed (ovn)

10: Over-voltage at stop (ovS)

11: Low-voltage during acceleration (LvA)

12: Low-voltage during deceleration (Lvd)

13: Low-voltage during constant speed (Lvn)

14: Low-voltage at stop (LvS)

15: Phase loss protection (orP)

16: IGBT overheating (oH1)

18: IGBT temperature detection failure (tH1o)

21: Over load (oL)

22: Electronic thermal relay 1 protection (EoL1)

23: Electronic thermal relay 2 protection (EoL2)

24: Motor overheating PTC/ PT100 (oH3)

26: Over torque 1 (ot1)

27: Over torque 2 (ot2)

28: Under current (uC)

31: EEPROM read error (cF2)

33: U-phase error (cd1)

34: V-phase error (cd2)

35: W-phase error (cd3)

36: cc (current clamp) hardware error (Hd0)

37: oc (over-current) hardware error (Hd1)

40: Auto-tuning error (AUE)

41: PID loss ACI (AFE)

43: PG feedback loss (PGF2)

44: PG feedback stall (PGF3)

45: PG slip error (PGF4)

. 48: ACI loss (ACE)

49: External fault (EF)

50: Emergency stop (EF1)

51: External Base Block (bb)

52: Password is locked (Pcod)
54: Illegal command (CE1)
55: Illegal data address (CE2)
56: Illegal data value (CE3)
57: Data is written to read-only address (CE4)
58: Modbus transmission time-out (CE10)
61: Y-connection / △-connection switch error (ydc)
62: Deceleration energy backup error (dEb)
63: Over slip error (oSL)
72: STO Loss (STL1)
76: STO (STo)
77: STO Loss 2 (STL2)
78: STO Loss 3 (STL3)
79: U-phase Over-current before run (Aoc)
80: V-phase Over-current before run (boc)
81: W-phase Over-current before run (coc)
82: Output phase loss U phase (oPL1)
83: Output phase loss V phase (oPL2)
84: Output phase loss W phase (oPL3)
87: Low frequency overload protection (oL3)
89: Rotor position detection error (roPd)
101: CANopen guarding error (CGdE)
102: CANopen heartbeat error (CHbE)
104: CANopen bus off error (CbFE)
105: CANopen index error (CidE)
106: CANopen station address error (CAdE)
107: CANopen index setting exceed limit (CFrE)
121: Internal communication error (CP20)
123: Internal communication error (CP22)
124: Internal communication error (CP30)
126: Internal communication error (CP32)
127: Internal communication error (CP33)
128: Over-torque 3 (ot3)
129: Over-torque 4 (ot4)
134: Internal communication error (EoL3)
135: Internal communication error (EoL4)
140: oc hardware error (Hd6)
141: GFF occurs before run (b4GFF)
142: Auto-tune error 1 (AuE1)
143: Auto-tune error 2 (AuE2)
144: Auto-tune error 3 (AuE3)
149: Auto-tune error 5 (AuE5)

- The parameters record when the fault occurs and forces a stop.
- When low-voltage at stop fault (LvS) occurs, the fault is not recorded. When low-voltage during operation faults (LvA, Lvd, Lvn) occur, the faults are recorded.
- When dEb function is valid and enabled, the drive executes dEb and records fault code 62 to
- Pr.06-17–Pr.06-22 and Pr.14-70–Pr.14-73 simultaneously.

06-23 Fault Output Option 1
06-24 Fault Output Option 2
06-25 Fault Output Option 3
06-26 Fault Output Option 4

Default: 0

Settings 0–65535 (refer to bit table for fault code)

- Use these parameters with multi-function output terminal (set Pr.06-23–Pr.06-26 to 35–38) for the specific requirement. When a fault occurs, the corresponding terminals are activated. Convert the binary value to a decimal value before you enter the value for Pr.06-23–Pr.06-26.

Fault Code	bit 0	bit 1	bit 2	bit 3	bit 4	bit 5	bit 6
	current	Volt.	OL	SYS	FBK	EXI	CE
0: No fault record							
1: Over-current during acceleration (ocA)	●						
2: Over-current during deceleration (ocd)	●						
3: Over-current during steady operation (ocn)	●						
4: Ground fault (GFF)	●						
6: Over-current at stop (ocS)	●						
7: Over-voltage during acceleration (ovA)		●					
8: Over-voltage during deceleration (ovd)		●					
9: Over-voltage during constant speed (ovn)		●					
10: Over-voltage at stop (ovS)		●					
11: Low-voltage during acceleration (LvA)		●					
12: Low-voltage during deceleration (Lvd)		●					
13: Low-voltage during constant speed (Lvn)		●					
14: Low-voltage at stop (LvS)		●					
15: Phase loss protection (orP)		●					
16: IGBT over-heat (oH1)			●				
18: IGBT temperature detection failure (tH1o)			●				
21: Drive over-load (oL)			●				
22: Electronics thermal relay 1 protection (EoL1)			●				
23: Electronics thermal relay 2 protection (EoL2)			●				
24: Motor overheating PTC/ PT100 (oH3)			●				
26: Over torque 1 (ot1)			●				
27: Over torque 2 (ot2)			●				
28: Under current (uC)	●						

Fault Code	bit 0	bit 1	bit 2	bit 3	bit 4	bit 5	bit 6
	current	Volt.	OL	SYS	FBK	EXI	CE
31: EEPROM read error (cF2)				●			
33: U-phase error (cd1)				●			
34: V-phase error (cd2)				●			
35: W-phase error (cd3)				●			
36: cc (current clamp) hardware error (Hd0)				●			
37: oc (over-current) hardware error (Hd1)				●			
40: Auto-tuning error (AUE)				●			
41: PID loss ACI (AFE)					●		
43: PG feedback loss (PGF2)					●		
44: PG feedback stall (PGF3)					●		
45: PG slip error (PGF4)					●		
48: ACI loss (ACE)					●		
49: External fault (EF)						●	
50: Emergency stop (EF1)						●	
51: External base block (bb)						●	
52: Password is locked (Pcod)				●			
54: Illegal command (CE1)							●
55: Illegal data address (CE2)							●
56: Illegal data value (CE3)							●
57: Data is written to read-only address (CE4)							●
58: Modbus transmission time-out (CE10)							●
61: Y-connection / △-connection switch error (ydc)						●	
62: Deceleration energy backup error (dEb)		●					
63: Over slip error (oSL)						●	
72: STO Loss (STL1)				●			
76: STO (STo)				●			
77: STO Loss 2 (STL2)				●			
78: STO Loss 3 (STL3)				●			
79: U-phase over-current before run (Aoc)	●						
80: V-phase over-current before run (boc)	●						
81: W-phase over-current before run (coc)	●						
82: U-phase output phase loss (oPL1)	●						
83: V-phase output phase loss (oPL2)	●						
84: W-phase output phase loss (oPL3)	●						
87: Low frequency overload protection (oL3)			●				
89: Rotor position detection error (roPd)					●		
101: CANopen guarding error (CGdE)							●
102: CANopen heartbeat error (CHbE)							●

Fault Code	bit 0	bit 1	bit 2	bit 3	bit 4	bit 5	bit 6
	current	Volt.	OL	SYS	FBK	EXI	CE
104: CANopen bus off error (CbFE)							●
105: CANopen index error (CidE)							●
106: CANopen slave station setting error (CAdE)							●
107: CANopen index setting exceed limit (CFrE)							●
121: Internal communication error (CP20)							●
123: Internal communication error (CP22)							●
124: Internal communication error (CP30)							●
126: Internal communication error (CP32)							●
127: Internal communication error (CP33)				●			
128: Over-torque 3 (ot3)			●				
129: Over-torque 4 (ot4)			●				
134: Electronics thermal relay 3 protection (EoL3)			●				
135: Electronics thermal relay 4 protection (EoL4)			●				
140: oc hardware error (Hd6)				●			
141: GFF occurs before run (b4GFF)				●			
142: Auto-tune error 1 (no feedback current error) (AuE1)				●			
143: Auto-tune error 2 (motor phase loss error) (AuE2)				●			
144: Auto-tune error 3 (no-load current I_0 measuring error) (AuE3)				●			
149: Auto-tune error 5 (rotor resistance measuring error) (AuE5)				●			

06-29 PTC Detection Selection

Default: 0

Settings 0: Warn and continue operation
1: Fault and ramp to stop
2: Fault and coast to stop
3: No warning

Sets the operation mode of a drive after detecting PTC.

06-30 PTC Level

Default: 50.0

Settings 0.0–100.0%

Sets AVI / ACI analog input function Pr.03-00–03-01 to 6 [thermistor (PTC) input value)].

Use this parameter to set the PTC level; 100% PTC level corresponds to the maximum analog input value.

- When using the AVI terminal, you must set Pr.03-28 to 0 and switch AVI voltage to 0–10 V. At this time, the AVI input impedance is 20 kΩ.
- When the temperature reaches to the set protection level, the motor acts according to the settings for Pr.06-29 and displays warning “oH3” (if Pr.06-29 = 1–3). When the temperature is lower than the set protection level, you can press RESET key to clear the fault.
- The PTC uses the AVI-input and is connected through divider resistance as shown below:
  1. The voltage between +10V to ACM: lies within 10–11V.
  2. The impedance for AVI is around 20K Ω. Recommended value for divider resistance is 1K–10K Ω.
  3. Please contact your motor dealer for the curve of temperature and resistance value for PTC.

     Protection level (Pr.06-30) = V+10 × (RPTC//20K) ÷ [R1+(RPTC//20K)]
     - V+10: voltage between +10V-ACM actual value
     - RPTC: motor PTC overheat protection level;
     - 20K Ω: the AVI input impedance;
     - R1: divider resistance (recommended value: 1–10k Ω)

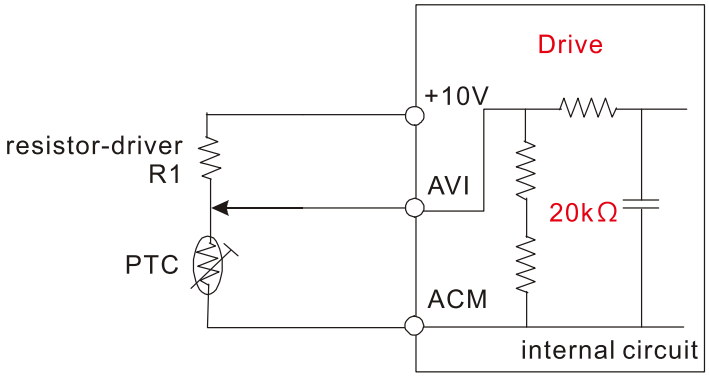

Take the standard PTC thermistor as an example: if the protection level is 1330 Ω, the actual voltage between +10V-ACM is 10.5 V and divider resistance R1 is 4.4k Ω.

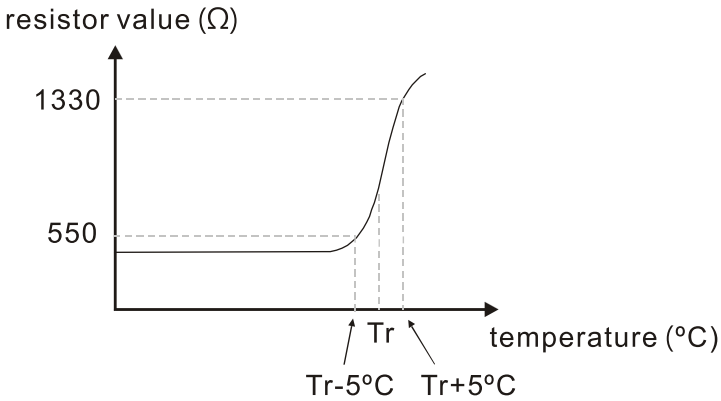

Refer to the following calculation when Pr.06-30 is set to 23% and motor temperature overheating protection level is 1330 Ω:

1330//20000 = (1330 × 20000) ÷ (1330+20000) = 1247.07

10.5 × 1247.07 ÷ (4400+1247.07) = 2.32 (V) ≒ 2.3 (V)

Pr.06-30 = 2.3 ÷ 10 V × % = 23%

06-31 Frequency Command at Malfunction

Default: Read only

Settings 0.00–599.00 Hz

When a malfunction occurs, check the current Frequency command. If it happens again, it overwrites the previous record.

06-32 Output Frequency at Malfunction

Default: Read only

Settings 0.00–599.00 Hz

When a malfunction occurs, check the current output frequency. If it happens again, it overwrites the previous record.

06-33 Output Voltage at Malfunction

Default: Read only

Settings 0.0–6553.5 V

When a malfunction occurs, check the current output voltage. If it happens again, it overwrites the previous record.

06-34 DC bus Voltage at Malfunction

Default: Read only

Settings 0.0–6553.5 V

When a malfunction occurs, check the current DC bus voltage. If it happens again, it overwrites the previous record.

06-35 Output Current at Malfunction

Default: Read only

Settings 0.00–655.35 Amp

When a malfunction occurs, check the current output current. If it happens again, it overwrites the previous record.

06-36 IGBT Temperature at Malfunction

Default: Read only

Settings -3276.7–3276.7°C

When a malfunction occurs, check the current IGBT temperature. If it happens again, it overwrites the previous record.

06-38 Motor Speed at Malfunction

Default: Read only

Settings -32767–32767 rpm

When a malfunction occurs, check the current motor speed in rpm. If it happens again, it overwrites the previous record.

06-39 Torque Command at Malfunction

Default: Read only

Settings -32767–32767%

📖 When a malfunction occurs, check the current torque command. If it happens again, it overwrites the previous record.

06-40 Status of the Multi-function Input Terminal at Malfunction

Default: Read only

Settings 0000h–FFFFh

06-41 Status of the Multi-function Output Terminal at Malfunction

Default: Read only

Settings 0000h–FFFFh

📖 When a malfunction occurs, check the current status of the multi-function input/output terminals. If it happens again, it overwrites the previous record.

06-42 Drive Status at Malfunction

Default: Read only

Settings 0000h–FFFFh

📖 When a malfunction occurs, check the current drive status (communication address 2101H). If it happens again, it overwrites the previous record.

06-44 STO Latch Selection

Default: 0

Settings 0: STO Latch
1: STO No Latch

📖 Pr.06-44 = 0: STO Alarm Latch. After you clear the cause of the STO Alarm, use a Reset command to clear the STO Alarm.

📖 Pr.06-44 = 1: STO Alarm no Latch. After you clear the cause of the STO Alarm, the STO Alarm clears automatically.

📖 All of the STL1–STL3 errors are “Alarm Latch” mode (in STL1–STL3 mode, the Pr.06-44 function is not available).

06-45 Output Phase Loss Detection Action (OPHL)

Default: 3

Settings 0: Warn and continue operation
1: Fault and ramp to stop
2: Fault and coast to stop
3: No warning

📖 The OPHL protection is enabled when Pr.06-45 is not set to 3.

06-46 Detection Time for Output Phase Loss

Default: 0.500

Settings 0.000–65.535 sec.

06-47 Current Detection Level for Output Phase Loss

Default: 1.00

Settings 0.00–100.00%

06-48 DC Brake Time for Output Phase Loss

Default: 0.000

Settings 0.000–65.535 sec.

Setting Pr.06-48 to 0 disables the OPHL detection function before operation.

- Status 1: The drive is in operation

  When any phase is less than the Pr.06-47 setting, and exceeds the Pr.06-46 setting time, the drive executes according to the Pr.06-45 setting.

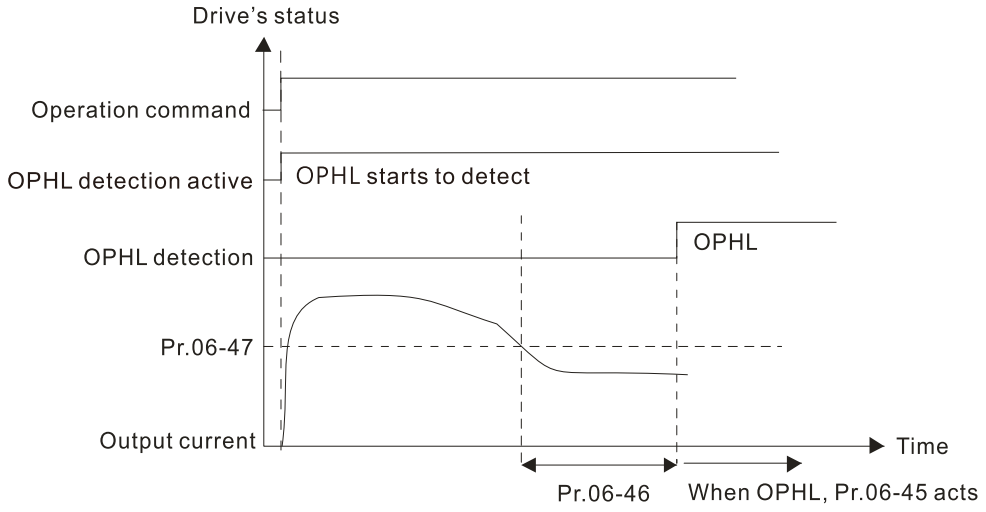

- Status 2:

  The drive is in STOP; Pr.06-48 = 0; Pr.07-02 ≠ 0

  After the drive starts, the DC brake operates according to Pr.07-01 and Pr.07-02. During this period, OPHL detection is not active. After the DC brake action is completed, the drive starts to run, and enables the OPHL protection as mentioned above for status 1.

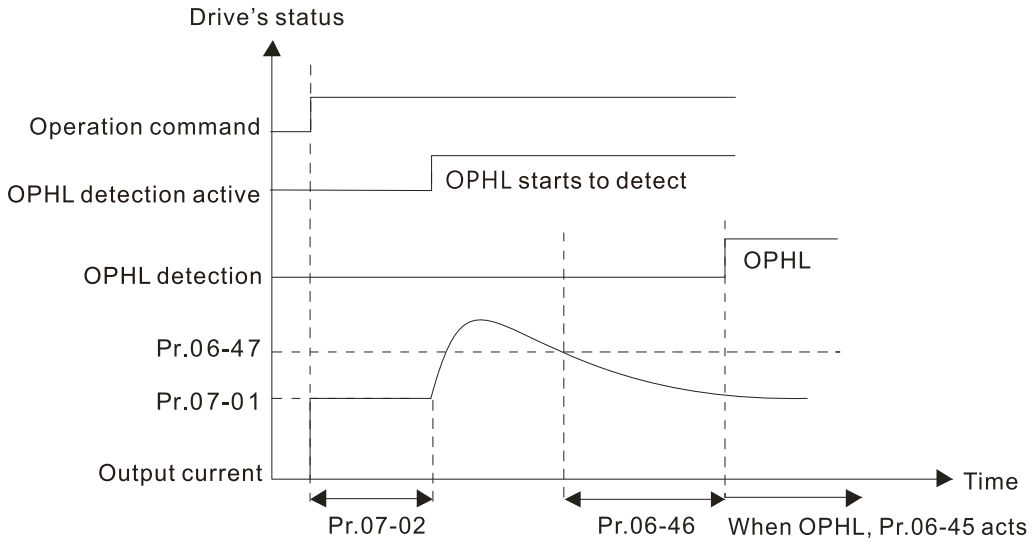

- Status 3:

  The drive is in STOP; Pr.06-48 ≠ 0; Pr.07-02 ≠ 0

  When the drive starts, it executes Pr.06-48 first, and then executes Pr.07-02 (DC brake). The DC brake current level in this state includes two parts: one is 20 times the Pr.06-47 setting value in Pr.06-48 setting time; the other is the Pr.07-01 setting value in Pr.07-02 setting time. The total DC brake time T = Pr.06-48 + Pr.07-02.

  Status 3-1: Pr.06-48 ≠ 0; Pr.07-02 ≠ 0 (No OPHL detected before operation)

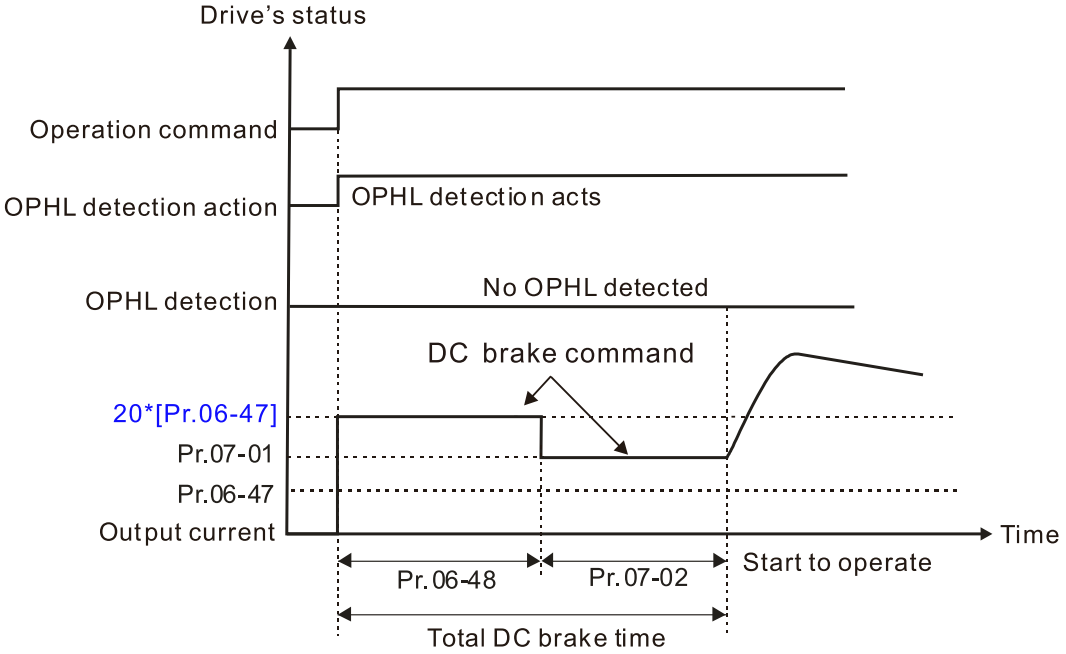

  Status 3-1: Pr.06-48 ≠ 0; Pr.07-02 ≠ 0 (OPHL detected before operation)

  In this period, if an OPHL occurs within the time for Pr.06-48, the drive executes the Pr.06-45 setting after the drive starts counting for half the time of Pr.06-48.

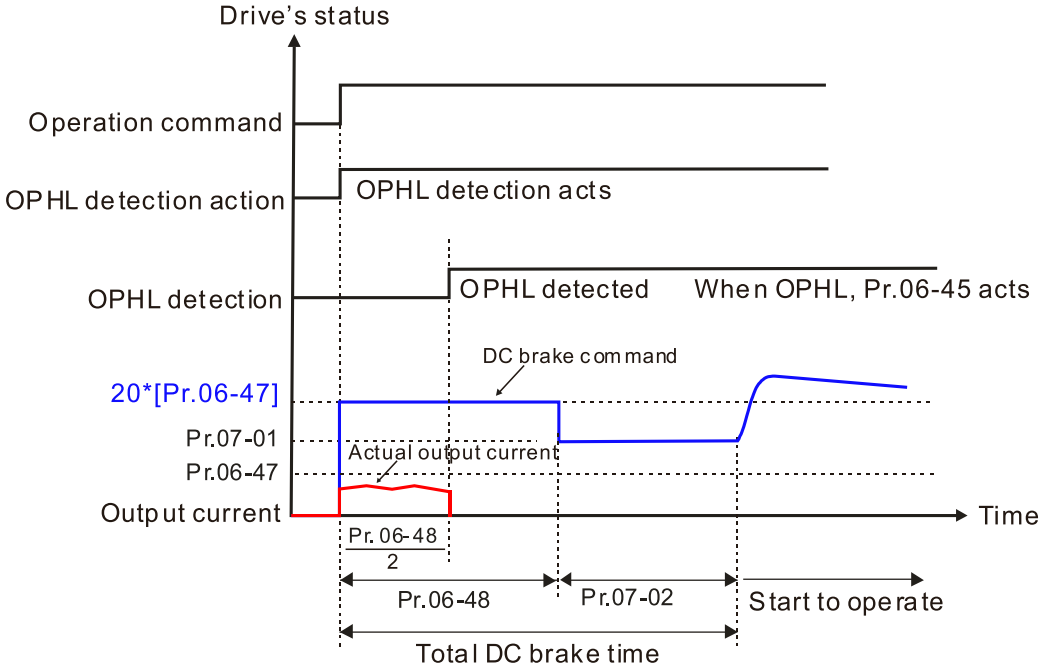

- Status 4: The drive is in STOP; Pr.06-48 ≠ 0; Pr.07-02=0

  When the drive starts, it executes Pr.06-48 as the DC brake. The DC brake current level is 20 times the Pr.06-47 setting value.

  Status 4-1: Pr.06-48 ≠ 0; Pr.07-02 = 0 (No OPHL detected before operation)

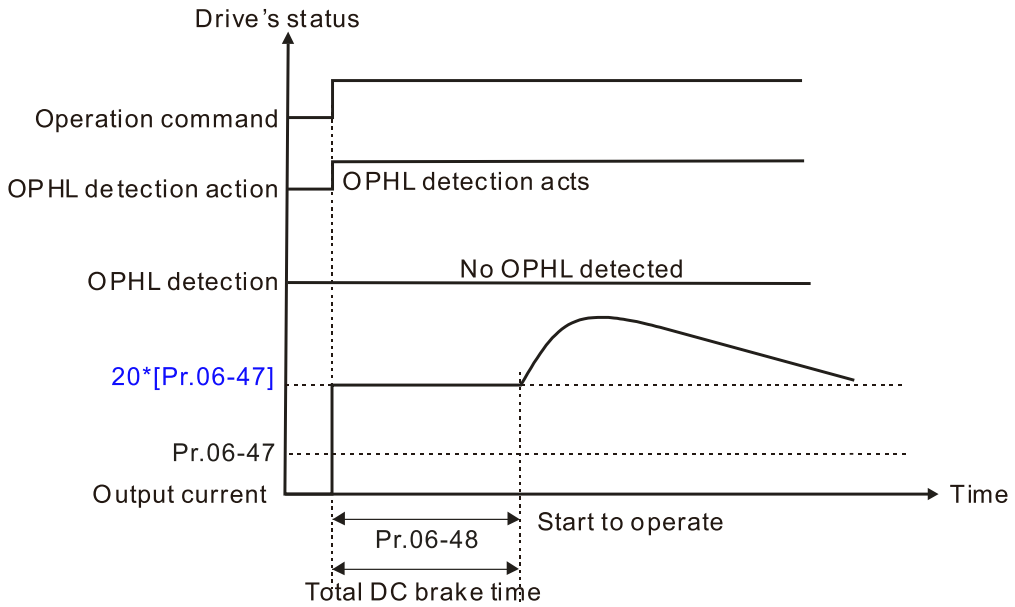

  Status 4-2: Pr.06-48 ≠ 0; Pr.07-02 = 0 (OPHL detected before operation)

  In this period, if an OPHL occurs within the time for Pr.06-48, the drive executes the Pr.06-45 setting after the drive starts counting for half the time of Pr.06-48.

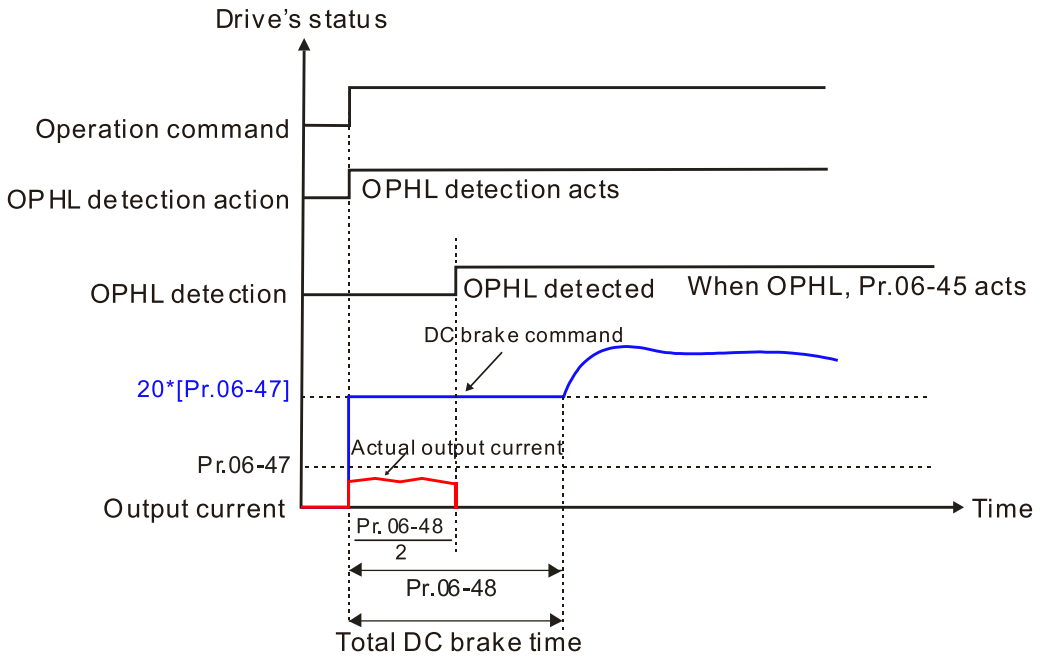

06-49 LvX Auto-Reset

Default: 0

Settings	0: Disable
	1: Enable

06-53 Input Phase Loss Detection Action (OrP)

Default: 0

Settings 0: Fault and ramp to stop
1: Fault and coast to stop

The drive executes the input phase loss protection according to Pr.06-53.

06-55 Derating Protection

Default: 0

Settings 0: Constant rated current and limit carrier frequency by load current and temperature
1: Constant carrier frequency and limit load current by setting carrier frequency
2: Constant rated current (same as setting 0), but close current limit

Allowable maximum output frequency and the minimum carrier frequency limit in control mode: For VF, SVC, VFPG modes: Maximum operation frequency (Pr.01-00) × 10 minimum sampling minimum point limit

Setting 0:

- Actual over-current stall prevention level = derating ratio × over-current stall prevention level (Pr.06-03 and 06-04).
- Rated current derating level: derating ratio × rated current (Pr.00-01).
- When the operating point is greater than the derating curve, the carrier frequency (Fc) output by the drive decreases automatically according to the ambient temperature, overload output current and overload time.
- Application conditions: If overloads are not frequent, and the concern is only about the carrier frequency operating with the rated current for a long time, and changes to the carrier frequency due to short overload are acceptable, set to 0.
- Take VFD9A0MS43ANSAA normal load for example: ambient temperature 50°C, UL Open Type, and independent installation. When the carrier frequency is set to 10 kHz, it corresponds to 55% of the rated output current. In the same condition for ambient temperature 40°C, it corresponds to 75% of rated output current. When the output current is higher than this value, it automatically decreases the carrier frequency according to the ambient temperature, output current and overload time. At this time, the overload capacity of the drive is 150% of the rated current.

Setting 1:

- Actual over-current stall prevention level = derating ratio × over-current stall prevention level (Pr.06-03 and 06-04).
- When the operating point is greater than the derating curve, the carrier frequency (Fc) output by the drive is fixed to the default value.
- Applicable conditions: Select this mode if the change of carrier frequency and motor noise caused by ambient temperature and frequent overload are not acceptable. (Refer to Pr.00-17.)

- Take VFD9A0MS43ANSAA normal load for example: ambient temperature 50ºC, UL Open Type, and independent installation. When the carrier frequency is set to 10 kHz, it corresponds to 75% of the derating ratio. When the output current is higher than this value, the carrier frequency unchanged. However, if the overload continues for a long time, the oH1 fault (IGBT overheating) or oL fault (the drive overload) will be triggered due to the IGBT temperature rise, and the drive will eventually stop.

📖 Setting 2:

- Actual over-current stall prevention level = derating ratio × over-current stall prevention level (Pr.06-03 and 06-04).
- Rated current derating level: derating ratio × rated current (Pr.00-01).
- The protection method and action are set to 0, it disables the current limit when output current is the derating ratio ×120% (default value) in normal load and when the output current is the derating ratio ×180% (default value) in heavy load. The advantage is that it provides a higher starting output current when the carrier frequency setting is higher than the default. However, the carrier frequency derates easily when it overloads.
- Example: when Pr.06-55 = 0 or 1, over-current stall prevention level = Ratio × Pr.06-03. When Pr.06-55 = 2, the over-current stall prevention level = Pr.06-03.

📖 Use this parameter with Pr.00-16 and Pr.00-17.

📖 The ambient temperature also affects the derating. Refer to Section 9-7-1 Derating Curve for Ambient Temperature and Altitude.

Take VFD9A0MS43ANSAA normal load for example: ambient temperature 50°C, UL open-type, and independent installation. When the carrier frequency is set to 10 kHz, it corresponds to 55% of the rated output current. If used for ambient temperature 60°C, it corresponds to 55% × 75% of the rated output current.

06-56 PT100 Voltage Level 1

Default: 5.000

Settings 0.000–10.000 V

06-57 PT100 Voltage Level 2

Default: 7.000

Settings 0.000–10.000 V

📖 Condition settings: PT100 voltage level Pr.06-57 > Pr.06-56.

06-58 PT100 Level 1 Frequency Protection

Default: 0.00

Settings 0.00–599.00 Hz

06-59 PT100 Activation Level 1 Protection Frequency Delay Time

Default: 60

Settings 0–6000 sec.

📖 PT100 operation instructions

1. Use voltage type analog input (AVI, ACI voltage 0–10 V) and select PT100 mode.
2. Select one of the voltage type analog inputs below:
   (a) .03-00 = 11

(b) Pr.03-01 = 11 and Pr.03-29 = 1

3. When selecting Pr.03-01 = 11 and Pr.03-29 = 1, you must switch ACI to 0–10 V.
4. The AFM outputs constant voltage or current, then Pr.03-20 = 23. You must switch AFM to 0–20 mA, and set AFM output level to 45% (Pr.03-32 = 45%) of 20 mA = 9 mA.
5. Use Pr.03-32 to adjust the constant voltage or constant current of the AFM output; the setting range is 0.00–100.00%.
6. There are two types of action levels for PT100. The diagram below shows the PT100 protection action.

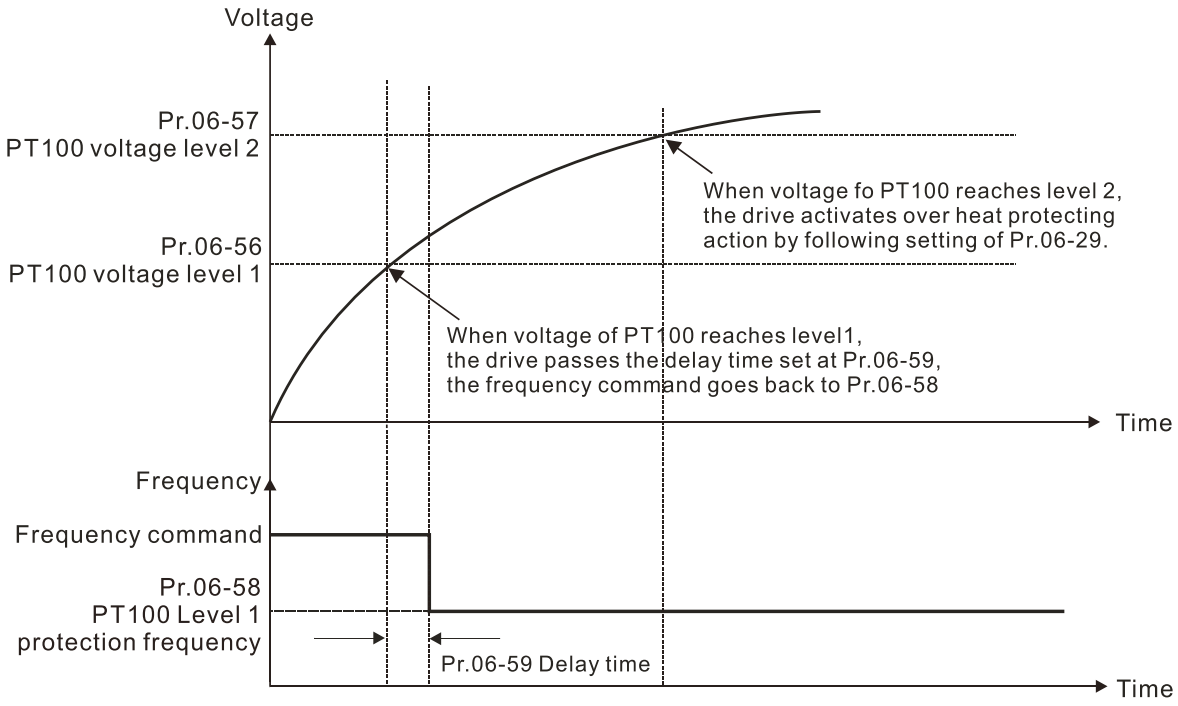

When Pr.06-58 = 0.00 Hz, PT100 function is disabled.

Case:

When using PT100, if the motor temperature is higher than 135°C (275°F), the drive starts to count the delay time for auto-deceleration (Pr.06-59). The drive decreases the motor frequency to the setting for Pr.06-58 when it reaches the delay time count value. The drive operates at the frequency set for Pr.06-58 until the motor temperature is lower than 135°C (275°F). If the motor temperature is higher than 150°C (302°F), the drive automatically decelerates to STOP and displays the warning “oH3”.

Set up process:

1. Switch AFM to 0–20 mA on the control board.
2. Wirin

   Connect external terminal AFM to “+”

   Connect external terminal ACM to “-“

   Connect AFM and AVI to “short circuit”
3. Pr.03-00 = 11, Pr.03-20 = 23, Pr.03-32 = 45% (9 mA)
4. Refer to the RTD temperature and resistance comparison table

   Temperature = 135°C, resistance = 151.71 Ω, input current: 9 mA, voltage: about 1.37 V_{DC}

   Temperature = 150°C, resistance = 157.33 Ω, input current: 9 mA, voltage: about 1.42 V_{DC}

5. When the RTD temperature > 135°C, the drive decelerates to the specified operation frequency automatically. Then, Pr.06-56 = 1.37 V and Pr.06-58 = 10 Hz. (When Pr.06-58 = 0, it disables the specified operation frequency.)
6. When RTD temperature > 150°C, the drive outputs a fault, decelerates to STOP, and displays the warning “oH3”. Then, Pr.06-57 = 1.42 V and Pr.06-29 = 1 (fault and ramp to stop).

06-60 Software Detection GFF Current Level

Default: 60.0

Settings 0.0–6553.5%

06-61 Software Detection GFF Filter Time

Default: 0.10

Settings 0.00–655.35 sec.

When the drive detects that the unbalanced three-phase output current is higher than the setting for Pr.06-60, GFF protection activates. The drive then stops output.

06-63	Operation Time of Fault Record 1 (Day)
06-65	Operation Time of Fault Record 2 (Day)
06-67	Operation Time of Fault Record 3 (Day)
06-69	Operation Time of Fault Record 4 (Day)
06-90	Operation Time of Fault Record 5 (Day)
06-92	Operation Time of Fault Record 6 (Day)

Default: Read only

Settings 0–65535 days

06-64	Operation Time of Fault Record 1 (Min.)
06-66	Operation Time of Fault Record 2 (Min.)
06-68	Operation Time of Fault Record 3 (Min.)
06-70	Operation Time of Fault Record 4 (Min.)
06-91	Operation Time of Fault Record 5 (Min.)
06-93	Operation Time of Fault Record 6 (Min.)

Default: Read only

Settings 0–1439 min.

If there is any malfunction when the drive operates, Pr.06-17–06-22 records the malfunctions, and Pr.06-63–06-70 records the operation time for four sequential malfunctions. Check if there is any problem with the drive according to the interval of the recorded fault.

Example:

The first error: ocA occurs after motor drive operates for 1000 minutes.

The second error: ocd occurs after another 1000 minutes.

The third error: ocn occurs after another 1000 minutes.

The fourth error: ocA occurs after another 1000 minutes.

The fifth error: ocd occurs after another 1000 minutes.

The sixth error: ocn occurs after another 1000 minutes.

Then, Pr.06-17–06-22 and Pr.06-63–06-70 are recorded as follows:

Parameter	1st Fault	2nd Fault	3rd Fault	4th Fault	5th Fault	6th Fault
Pr.06-17	ocA	ocd	ocn	ocA	ocd	ocn
Pr.06-18	0	ocA	ocd	ocn	ocA	ocd
Pr.06-19	0	0	ocA	ocd	ocn	ocA
Pr.06-20	0	0	0	ocA	ocd	ocn
Pr.06-21	0	0	0	0	ocA	ocd
Pr.06-22	0	0	0	0	0	ocA
Pr.06-63	1000	560	120	1120	680	240
Pr.06-64	0	1	2	2	3	4
Pr.06-65	0	1000	560	120	1120	680
Pr.06-66	0	0	1	2	2	3
Pr.06-67	0	0	1000	560	120	1120
Pr.06-68	0	0	0	1	2	2
Pr.06-69	0	0	0	1000	560	120
Pr.06-70	0	0	0	0	1	2

NOTE: By examining the time record, you can see that the last fault (Pr.06-17) happened after the drive ran for four days and 240 minutes.

06-71 Low Current Setting Level

Default: 0.0

Settings 0.0–100.0%

06-72 Low Current Detection Time

Default: 0.00

Settings 0.00–360.00 sec.

06-73 Low Current Action

Default: 0

Settings 0 : No function
1 : Fault and coast to stop
2 : Fault and ramp to stop by the second deceleration time
3 : Warn and continue operation

The drive operates according to the setting for Pr.06-73 when the output current is lower than the setting for Pr.06-71 and when the time of the low current exceeds the detection time for Pr.06-72. Use this parameter with the external multi-function output terminal setting 44 (low current output).

The low current detection function does not execute when drive is in sleep or standby status.

06-80 Fire Mode

Default: 0

Settings 0: Disable
1: Forward (counterclockwise) operation
2: Reverse (clockwise) operation

Use this parameter with multi-function input terminal setting 58 or 59, and multi-function output terminal setting 53.

0: Fire detection is invalid.

1: The motor operates in a counterclockwise direction (U, V, W).

2: The motor operates in a clockwise direction (U, W, V).

06-81 Operating Frequency in Fire Mode

Default: 60.00

Settings 0.00–599.00 Hz

Enables fire mode (Pr.06-70 = 1 or 2) and sets the operation frequency in fire mode (Pr.06-81). The drive operates with operation frequency in fire mode when the fire mode is enabled.

06-88 Operation Times in Fire Mode

Default: Read only

Settings 0–65535 times

Counts once when fire mode operates for 4 minutes.

07 Special Parameters

You can set this parameter during operation.

07-00 Software Brake Chopper Action Level

Default: 370.0 / 740.0 / 950.0

Settings 115V / 230V models: 350.0–450.0 V_{DC}
460V models: 700.0–900.0 V_{DC}
575V models: 875.0–1000.0 V_{DC}

Sets the DC bus voltage at which the brake chopper is activated. Choose a suitable brake resistor to achieve the optimal deceleration performance. Refer to Chapter 7 Optional Accessories for information about brake resistors.

07-01 DC Brake Current Level

Default: 0

Settings 0–100%

Sets the level of the DC brake current output to the motor at start-up and stop. When setting the DC brake current, the rated current (Pr.00-01) is 100%. It is recommended that you start with a low DC brake current level and then increase until you reach the proper holding torque. However, the DC brake current cannot exceed the motor's rated current to prevent the motor from burnout. Therefore, DO NOT use the DC brake for mechanical retention, otherwise injury or accident may occur.

07-02 DC Brake Time at Start-up

Default: 0.0

Settings 0.0–60.0 sec.

The motor may continue rotating due to external forces or the inertia of the motor itself. If you use the drive with the motor rotating, it may cause motor damage or trigger drive protection due to over-current. This parameter outputs DC current, generating torque to force the motor stop to get a stable start before motor operation. This parameter determines the duration of the DC brake current output to the motor when the drive starts up. Set this parameter to 0.0 to disable the DC brake at start-up.

07-03 DC Brake Time at STOP

Default: 0.0

Settings 0.0–60.0 sec.

The motor may continue rotating after the drive stops output due to external forces or the inertia of the motor itself. This parameter outputs DC current, generating torque to force the motor stop after the drive stops output to make sure that the motor stops.

This parameter determines the duration of the DC Brake current output to the motor when braking. To enable the DC brake at STOP, you must set Pr.00-22 (Stop Method) to 0 (ramp to stop). Set this parameter to 0.0 to disable the DC brake at stop.

Related parameters:

- Pr.00-22 Stop Method
- Pr.07-04 DC Brake Frequency at STOP.

07-04 DC Brake Frequency at STOP

Default: 0.00

Settings 0.00–599.00 Hz

Determines the start frequency of the DC brake before the drive ramps to stop. When this setting is less than Pr.01-09 (Start-up Frequency), the start frequency for the DC brake begins at the minimum frequency.

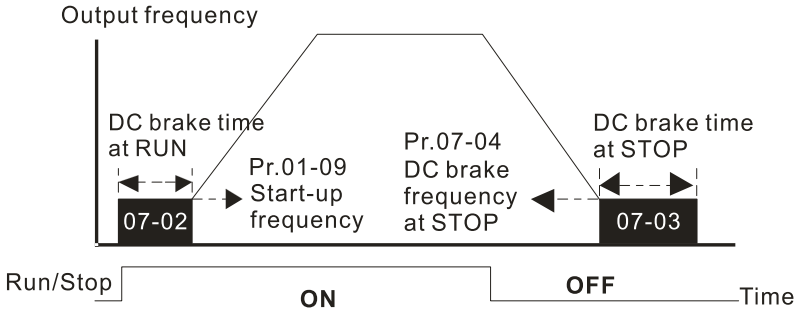

DC Brake Output Timing Diagram

Use the DC brake before running the motor when the load is movable at stop, such as with fans and pumps. The motor is in free running status and in unknown rotation direction before the drive starts up. Execute the DC brake before you start the motor.

Use the DC Brake at STOP when you need to brake the motor quickly or to control the positioning, such as with cranes or cutting machines.

07-05 Voltage Increasing Gain

Default: 100

Settings 1–200%

When using speed tracking, adjust Pr.07-05 to slow down the increasing voltage gain if there are errors such as oL or oc; however, the speed tracking time will be longer.

07-06 Restart after Momentary Power Loss

Default: 0

Settings 0: Stop operation
1: Speed tracking by the speed before the power loss
2: Speed tracking by the minimum output frequency

Determines the operation mode when the drive restarts from a momentary power loss.

The power system connected to the drive may power off momentarily for many reasons. This function allows the drive to keep outputting voltages after the drive is repowered and does not cause the drive to stop.

1: Frequency tracking begins before momentary power loss and accelerates to the master Frequency command after the drive output frequency and motor rotator speed are synchronous. Use this setting when there is a lot of inertia with little resistance on the motor load. For example, in equipment with a large inertia flywheel, there is NO need to wait until the flywheel stops completely after a restart to execute the operation command; therefore, it saves time.

2: Frequency tracking starts from the minimum output frequency and accelerates to the master Frequency command after the drive output frequency and motor rotator speed are synchronous. Use this setting when there is little inertia and large resistance.

07-07 Allowed Power Loss Duration

Default: 2.0

Settings 0.0–20.0 sec.

- Determines the maximum time of allowable power loss. If the duration of a power loss exceeds this parameter setting, the AC motor drive stops output after the power recovers.
- Pr.07-06 is valid when the maximum allowable power loss time is ≤ 20 seconds and the AC motor drive displays “Lv”. If the AC motor drive is powered off due to overload, even if the maximum allowable power loss time is ≤ 20 seconds, Pr.07-06 is invalid after the power recovers.

07-08 Base Block Time

Default: 0.5

Settings 0.0–60.0 sec.

- When momentary power loss is detected, the AC motor drive blocks its output and then waits for a specified period of time (determined by Pr.07-08, called Base Block Time) before resuming operation. Set this parameter to the time that allows the residual voltage at the output side to decrease to 0 V before activating the drive again.
- This parameter is not only for the B.B. time, but also is the re-start delay time after free run.
- The RUN command during a free run operation is memorized, and runs or stops with the last frequency command after the delay time.
- This delay time is only applicable in “Re-start after coast to stop” status, and does not limit ramp to stop. The coast to stop can be caused by various control command source, or by errors.
- Following table is the recommended setting for re-start delay time of each model power. You must set Pr.07-08 according to this table (the default of each model power is based on this table as well).

kW	0.75	1.5	2.2	3.7	5.6	7.5	11.0	15.0	18.5	22.0
HP	1	2	3	5	7.5	10	15	20	25	30
Delay Time (sec.)	0.3	0.4	0.5	0.6	0.7	0.8	0.9	1.0	1.1	1.2

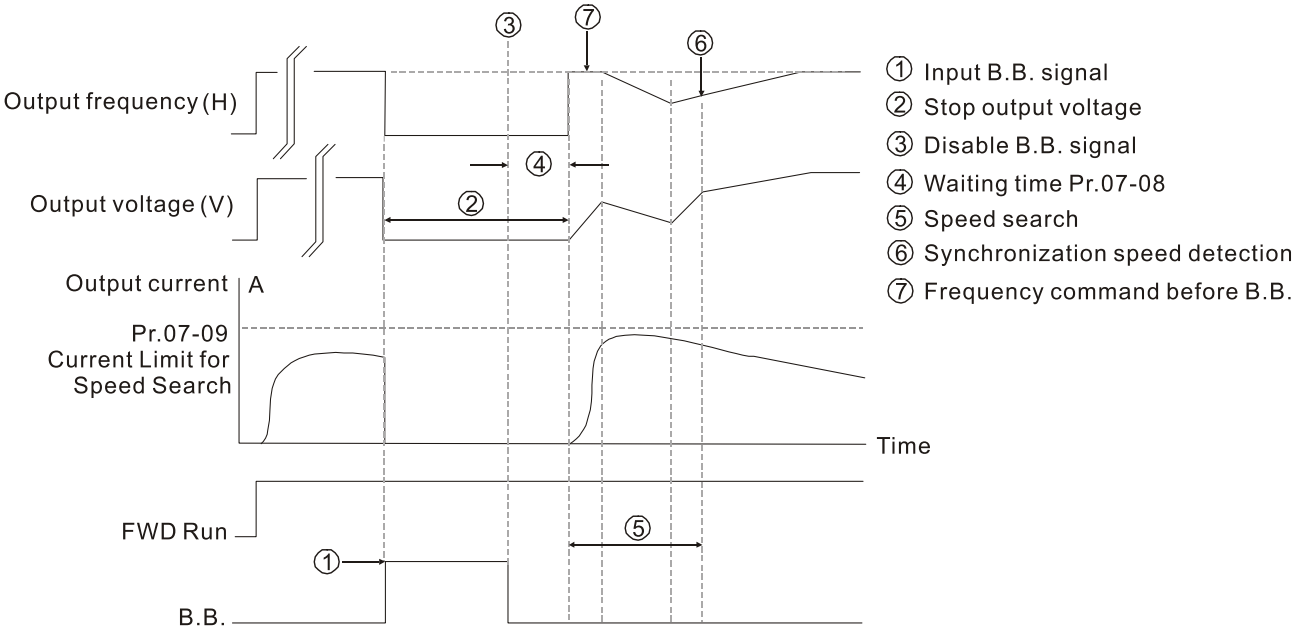

B.B. Search with last output frequency downward timing chart

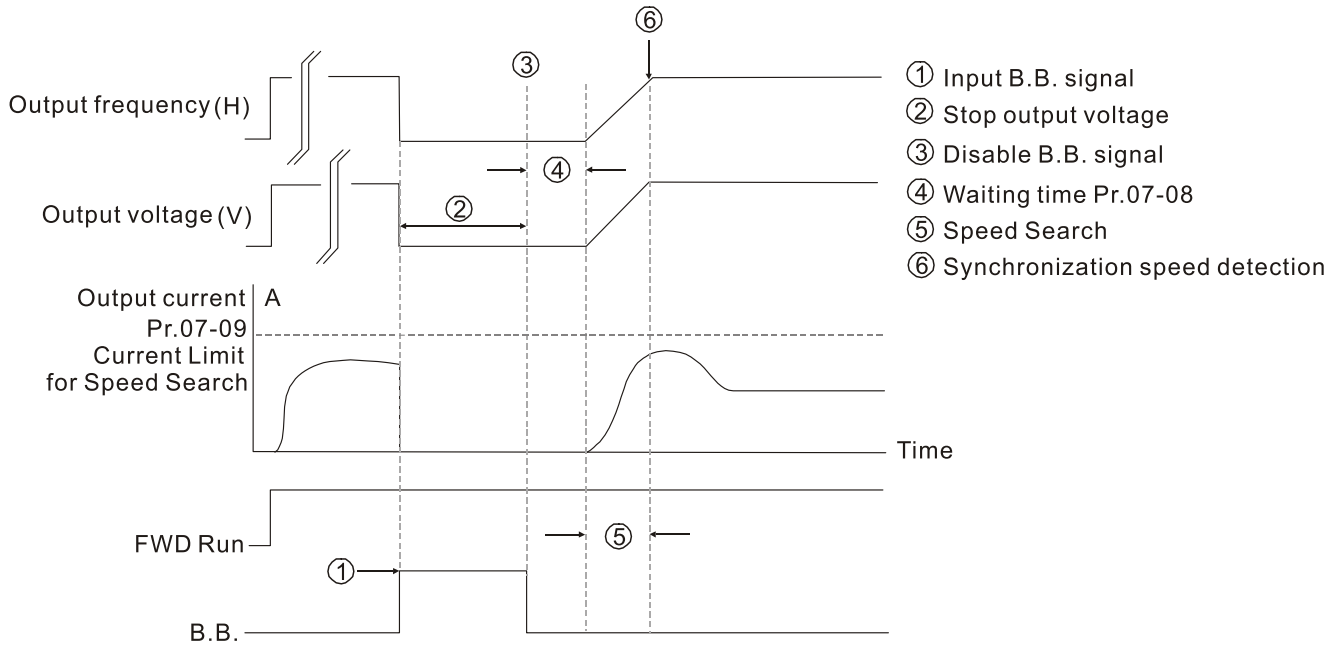

B.B. Search with minimum output frequency upward timing chart

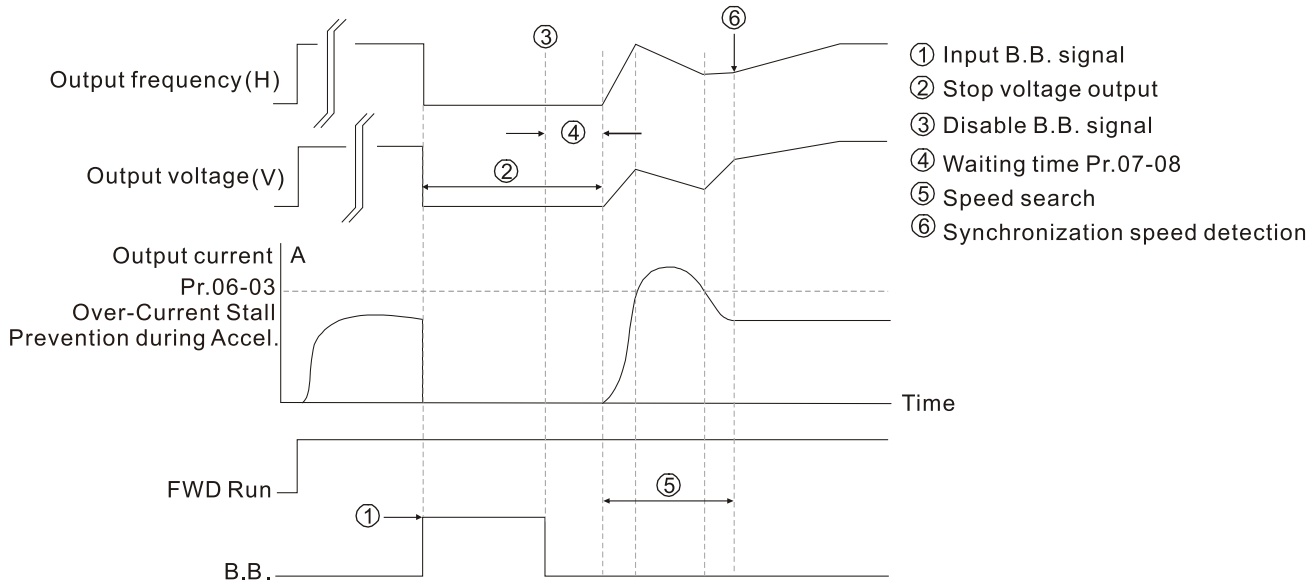

Over-current stall prevention action chart

07-09 Current Limit of Speed Tracking

Default: 100

Settings 20–200%

- The AC motor drive executes speed tracking only when the output current is greater than the value set in Pr.07-09.
- The maximum current for speed tracking affects the synchronous time. The larger the parameter setting, the faster the synchronization occurs. However, if the parameter setting is too large, the overload protection function may be activated.

07-10 Restart after Fault Action

Default: 0

Settings 0: Stop operation
1: Speed tracking by current speed
2: Speed tracking by minimum output frequency

Faults include: bb, oc, ov, occ. To restart after oc, ov, occ, you can NOT set Pr.07-11 to 0.

07-11 Number of Times of Restart after Fault

Default: 0

Settings 0–10

After fault (allowed fault: oc, ov, occ) occurs, the AC motor drive can reset and restart automatically up to 10 times. If Pr.07-11 is set to 0, the drive resets or restarts automatically after faults occur. The drive starts according to the Pr.07-10 setting after restarting after fault.

If the number of faults exceeds the Pr.07-11 setting, the drive does not reset and restart until you press “RESET” manually and execute the operation command again.

07-12 Speed Tracking during Start-up

Default: 0

Settings 0: Disable
1: Speed tracking by the maximum output frequency
2: Speed tracking by current frequency command at start
3: Speed tracking by the minimum output frequency

Speed tracking is suitable for punch, fans and other large inertia loads. For example, a mechanical punch usually has a large inertia flywheel, and the general stop method is coast to stop. If it needs to be restarted again, the flywheel may take 2–5 minutes or longer to stop. This parameter setting allows you to start the flywheel operating again without waiting until the flywheel stops completely.

07-13 dEb Function Selection

Default: 0

Settings 0: Disable
1: dEb with auto-acceleration / auto-deceleration, the drive does not output the frequency after the power is restored.
2: dEb with auto-acceleration / auto-deceleration, the drive outputs the frequency after the power is restored.
3: dEb low-voltage control, then the drive’s voltage increases to 350 V_{DC} / 700 V_{DC} and ramps to stop after low frequency
4: dEb high-voltage control of 350 V_{DC} / 700 V_{DC}, and the drive ramps to stop

dEb (Deceleration Energy Backup) lets the motor decelerate to stop when momentary power loss occurs. When the power loss is instantaneous, use this function to let the motor decelerate to zero speed. If the power recovers at this time, the drive restarts the motor after the dEb return time.

Lv return level: Default value depends on the drive power model.

- Models for frame A, B, C, D = Pr.06-00 + 75 V (575V models) / 60 V (460V models) / 30 V (230V models)
- Models for frame E and above = Pr.06-00 + 80 V / 40 V (230V models)
- Lv level: Default is Pr.06-00.
- During dEb operation, other protection, such as ryF, ov, oc, occ, and EF may interrupt it, and these error codes are recorded.
- The STOP (RESET) command does not work during the dEb auto-deceleration, and the drive continues decelerating to stop. To make the drive coast to stop immediately, use another function (EF) instead.
- The B.B. function does not work when executing dEb. The B.B. function is enabled after the dEb function finishes.
- Even though the Lv warning does not display during dEb operation, if the DC bus voltage is lower than the Lv level, MO = 10 (Low voltage warning) still operates.
- The following explains the dEb action:
  When the DC bus voltage drops below the dEb setting level, the dEb function starts to work (soft start relay remains closed), and the drive executes auto-deceleration.
  - Situation 1: Momentary power loss, or too low and unstable power voltage, or power supply sliding down because of sudden heavy load
    Pr.07-13 = 1 and power recovers
    When the power recovers and DC bus voltage exceeds the dEb return level, the drive linearly decelerates to 0 Hz and stops. The keypad displays the “dEb” warning until you manually reset it, so you can see the reason for the stop.

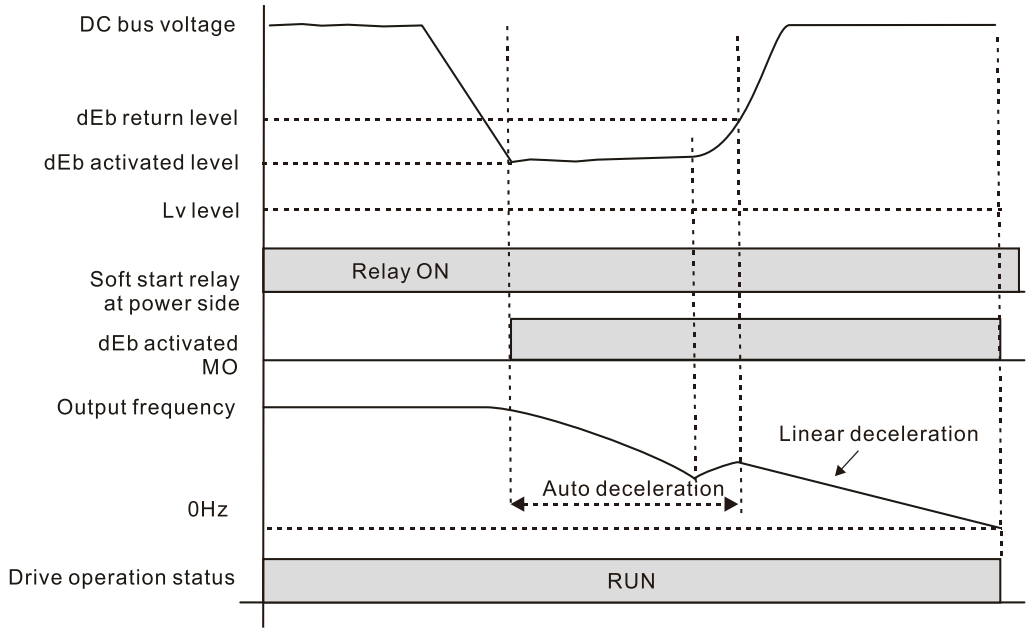

  - Situation 2: Momentary power loss, or too low and unstable power voltage, or power supply sliding down because of sudden heavy load
    Pr.07-13 = 2 and power recovers
    During the dEb deceleration (includes 0 Hz run), if the power recovers to a voltage higher than dEb return level, the drive maintains the frequency for three seconds and then accelerates again. The “dEb” warning on the keypad is automatically cleared.

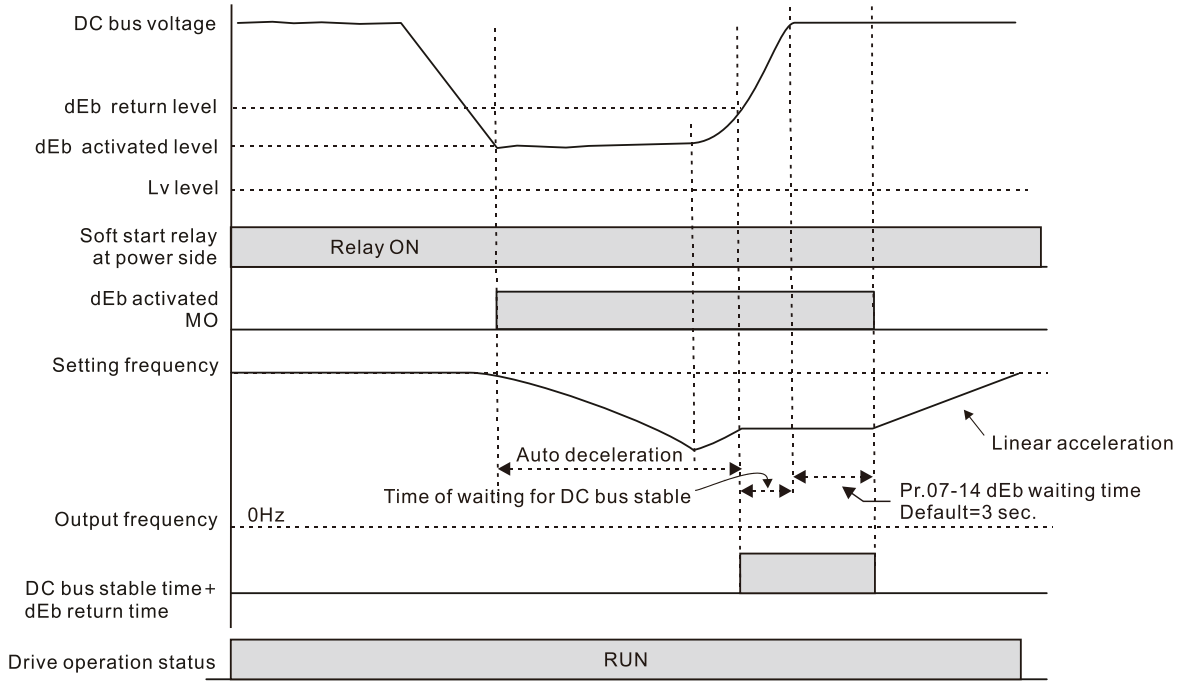

- Situation 3: Unexpected power shut down or power loss

  Pr.07-13 = 1 and power does not recover

  The keypad displays the “dEb” warning and the drive stops after decelerating to the lowest operating frequency. When the DC bus voltage is lower than the Lv level, the drive disconnects the soft start relay until the power completely runs out.

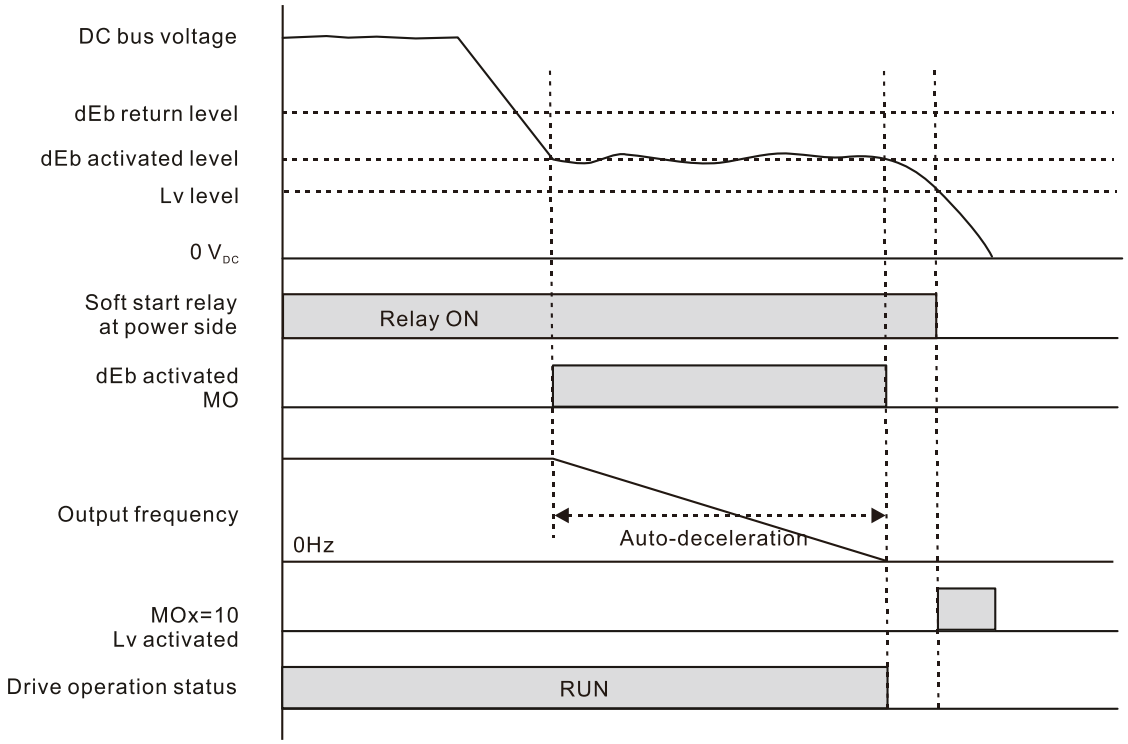

- Situation 4: Unexpected power shut down or power loss

  Pr.07-13 = 2 and power does not recover

  The drive decelerates to 0 Hz. The DC bus voltage continues to decrease until the voltage is lower than the Lv level, and then the drive disconnects the soft start relay. The keypad displays “dEb” warning until the drive completely runs out of power.

- Situation 5: Pr.07-13 = 2 and power recovers after the DC bus voltage is lower than the Lv level.
  The drive decelerates to 0 Hz. The DC bus voltage continues to decrease until the voltage is lower than the Lv level, and then the drive disconnects the soft start relay. The soft start relay closes again after the power recovers and the DC bus voltage is higher than the Lv return level. When the DC bus voltage is higher than the dEb return level, the drive maintains the frequency for three seconds and starts to accelerate linearly. The “dEb” warning on the keypad is automatically cleared.

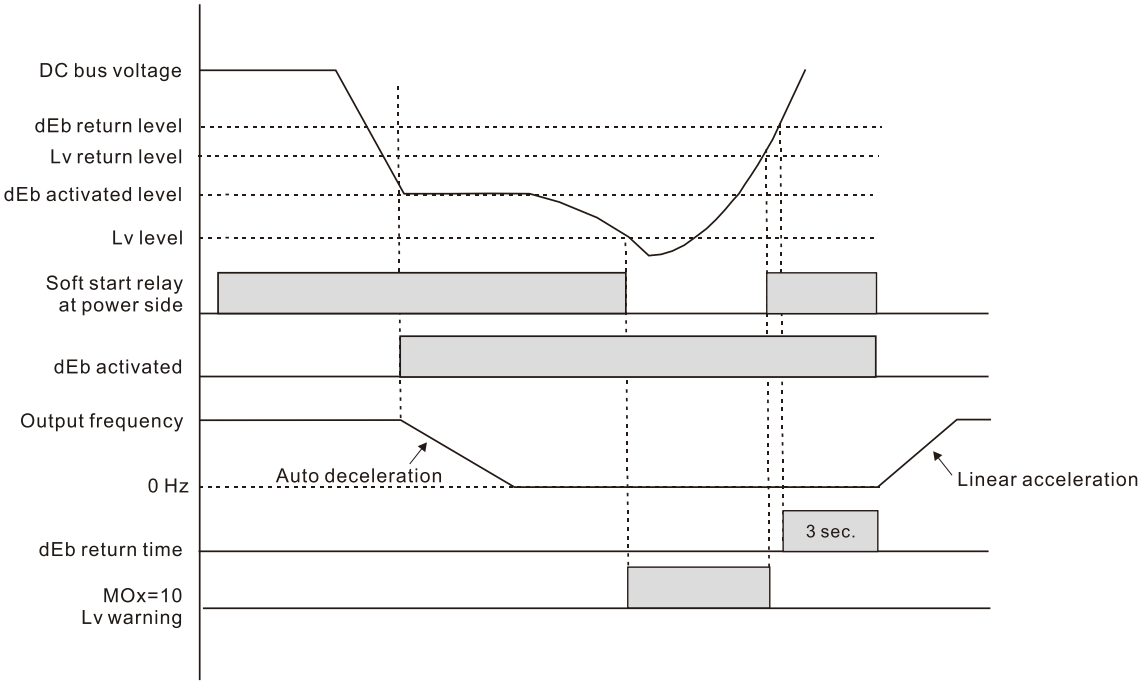

07-15 Dwell Time at Acceleration

Default: 0.00

Settings 0.00–600.00 sec.

07-17 Dwell Time at Deceleration

Default: 0.00

Settings 0.00–600.00 sec.

07-16 Dwell Frequency at Acceleration

Default: 0.00

Settings 0.00–599.00 Hz

07-18 Dwell Frequency at Deceleration

Default: 0.00

Settings 0.00–599.00 Hz

- In heavy load situations, the Dwell temporarily maintains stable output frequency. Use this parameter for cranes, elevators, and so on.
- For heavy load applications, use Pr.07-15–Pr.07-18 to avoid OV or OC protection.

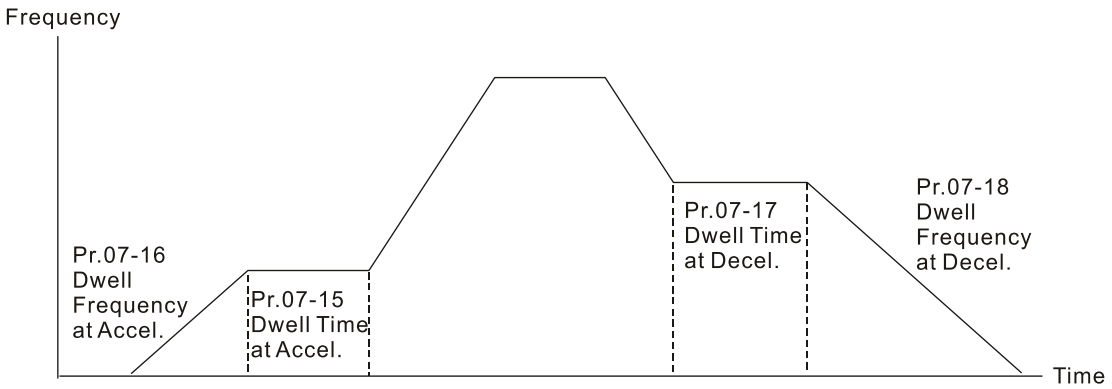

Dwell at acceleration / deceleration

07-19 Fan Cooling Control

Default: 3

Settings 0: Fan is always ON
1: Fan is OFF after the AC motor drive stops for one minute.
2: Fan is ON when the AC motor drive runs; fan is OFF when the AC motor drive stops
3: Fan turns ON when the temperature (IGBT) reaches around 60°C.

- Use this parameter to control the fan.
- 0: Fan runs immediately when the drive power is turned ON.
- 1: Fan runs when the AC motor drive runs. One minute after the AC motor drive stops, the fan is OFF.
- 2: Fan runs when the AC motor drive runs and stops immediately when the AC motor drive stops.
- 3: When temperature of the IGBT or capacitance is higher than 60°C, the fan runs. When the temperature of the IGBT or capacitance are lower than 40°C and the drive stops, the fan stops.

07-20 Emergency Stop (EF) & Force to Stop Selection

Default: 0

Settings 0: Coast to stop
1: Stop by the first deceleration time
2: Stop by the second deceleration time
3: Stop by the third deceleration time
4: Stop by the fourth deceleration time
5: System deceleration
6: Automatic deceleration

- When the multi-function input terminal setting is set to 10 (EF input) or 18 (force to stop) and the terminal contact is ON, the drive stops according to the setting of this parameter.

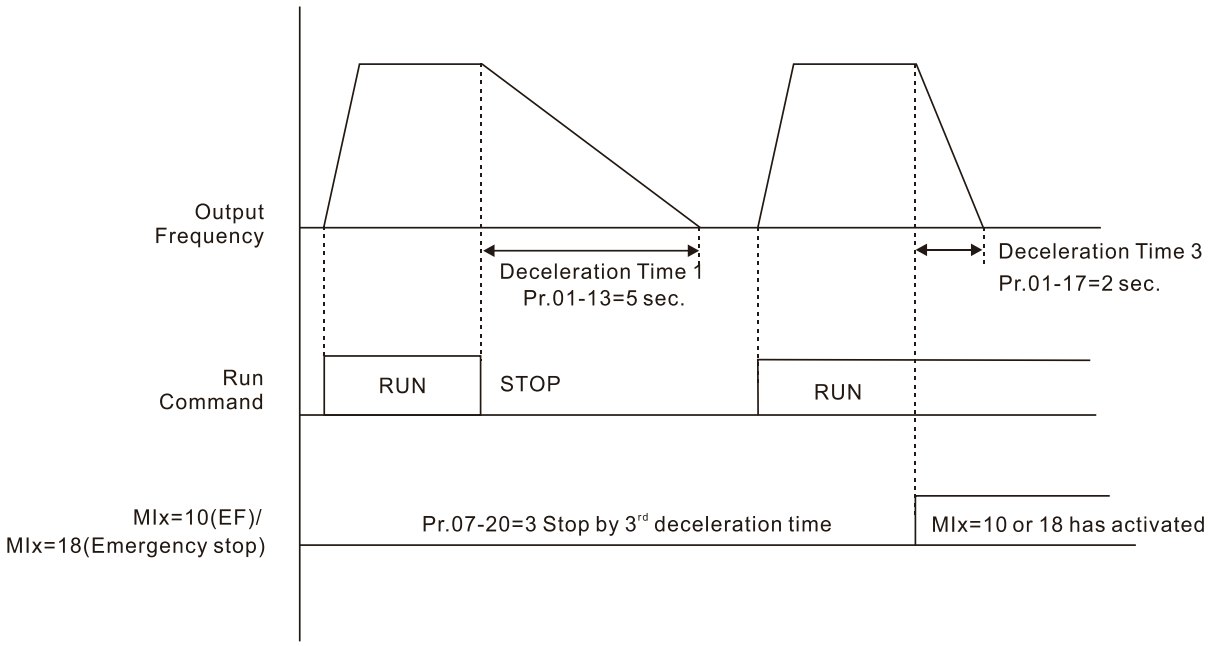

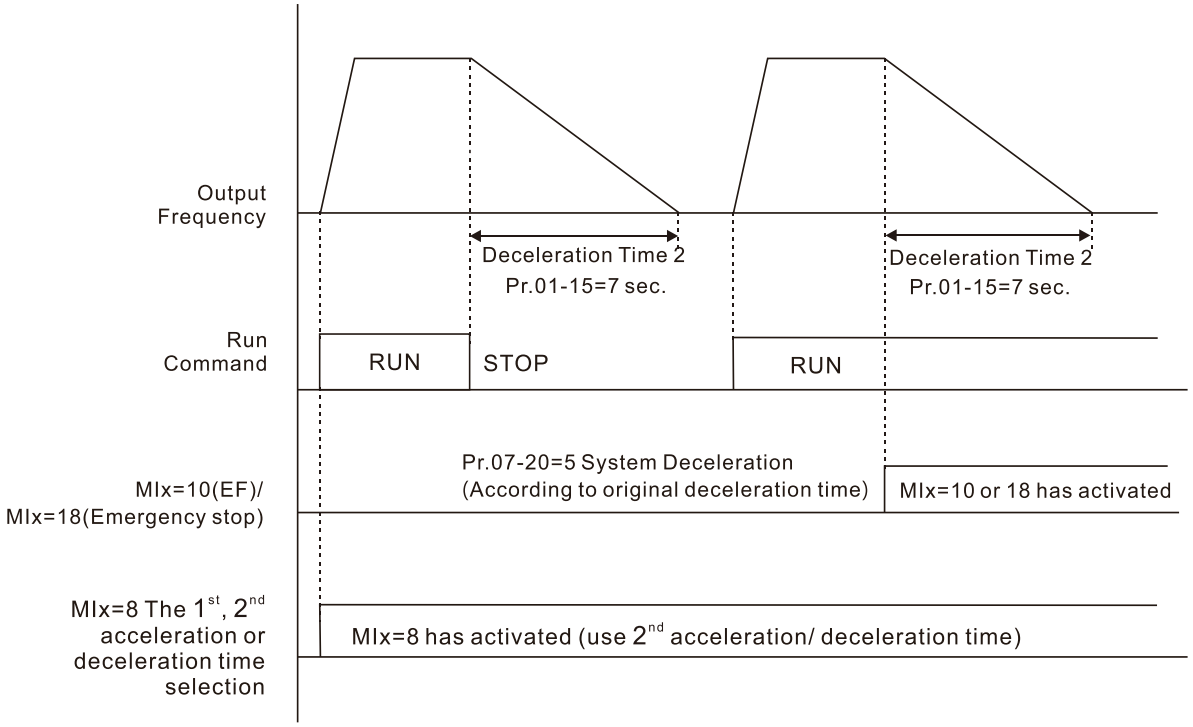

07-21 Automatic Energy-Saving Setting

Default: 0

Settings 0: Disable

1: Power factor energy-saving improvement

When energy-saving is enabled, the motor acceleration/deceleration operates with full voltage. During constant speed operation, it automatically calculates the best voltage value according to the load power. This function is not suitable for fluctuating loads or loads which are nearly full during operation.

When the output frequency is constant (that is, constant operation), the output voltage decreases automatically as the load decreases. Therefore, the drive operates with minimum multiplication of voltage and current (electric power) to reach the energy-saving.

07-23 Automatic Voltage Regulation (AVR) Function

Default: 0

Settings 0: Enable AVR
1: Disable AVR
2: Disable AVR during deceleration

- The rated voltage of a 220V motor is usually 200 V_{AC}, 60 Hz / 50 Hz, and the input voltage of the AC motor drive may vary from 180–264 V_{AC}, 50 Hz / 60 Hz. Therefore, when the AC motor drive is used without the AVR function, the output voltage is the same as the input voltage. When the motor runs at the voltage exceeding 12–20% of the rated voltage, it causes higher temperatures, damaged insulation, and unstable torque output, which result in losses due to shorter motor lifetime.
- The AVR function automatically regulates the output voltage of the AC motor drive to the motor's rated voltage when the input voltage exceeds the motor's rated voltage. For example, if the V/F curve is set at 200 V_{AC}, 50 Hz and the input voltage is at 200–264 V_{AC}, then the drive automatically reduces the output voltage to the motor to a maximum of 200 V_{AC}, 50 Hz. If the input voltage is at 180–200 V_{AC}, the output voltage to motor is in direct proportion to the input voltage.
- 0: When the AVR function is enabled, the drive calculates the output voltage according to the actual DC bus voltage. The output voltage does NOT change when the DC bus voltage changes.
- 1: When the AVR function is disabled, the drive calculates the output voltage according to the actual DC bus voltage. The output voltage changes with the DC bus voltage, and may cause insufficient current, over-current or oscillation.
- 2: The drive disables the AVR function only during deceleration to stop, and at this time, you can accelerate the braking to achieve the same result.
- When the motor ramps to stop, disable the AVR function to shorten the deceleration time. Then, use with the auto-acceleration and auto-deceleration functions to make the motor's deceleration more stable and quicker.

07-24 Torque Command Filter Time

Default: 0.050

Settings 0.001–10.000 sec.

- IMVF and PMSVC control modes only.
- When the time constant setting is too large, the control is stable but the control response is slow. When the time constant setting is too small, the control response is faster but the control may be unstable. For optimal setting, adjust the setting based on the control stability or the control response.

07-25 Slip Compensation Filter Time

Default: 0.100

Settings 0.001–10.000 sec.

- IMSVC control mode only.
- Change the compensation response time with Pr.07-24 and Pr.07-25.

- If you set Pr.07-24 and Pr.07-25 to 10 seconds, the compensation response time is the slowest; however, the system may be unstable if you set the time too short.

07-26 Torque Compensation Gain
07-71 Torque Compensation Gain (Motor 2)
07-73 Torque Compensation Gain (Motor 3)
07-75 Torque Compensation Gain (Motor 4)

Default: 1

Settings IM: 0–10 (when Pr.05-33 = 0)
PM: 0–5000 (when Pr.05-33 = 1 or 2)

- IMVF and PMSVC control modes only.
- With a large motor load, a part of the drive output voltage is absorbed by the stator winding resistor; therefore, the air gap magnetic field is insufficient. This causes insufficient voltage at motor induction and results in excessive output current but insufficient output torque. Auto-torque compensation can automatically adjust the output voltage according to the load and keep the air gap magnetic fields stable to get the optimal operation.
- In the V/F control, the voltage decreases in direct proportion with decreasing frequency. The torque decreases at low speed because of a decreasing AC resistor and an unchanged DC resistor. The auto-torque compensation function increases the output voltage at low frequency to get a higher starting torque.
- When the compensation gain is set too high, it may cause motor over-flux and result in a too large output current of the drive, motor overheating or trigger the drive's protection function.
- This parameter affects the output current during operation. The low-speed zone has less impact.
- Set this parameter higher when the no-load current is too large, but the motor may vibrate if the setting is too high. If the motor vibrates when operating, reduce the setting.

07-27 Slip Compensation Gain
07-72 Slip Compensation Gain (Motor 2)
07-74 Slip Compensation Gain (Motor 3)
07-76 Slip Compensation Gain (Motor 4)

Default: 0.00
(Default value is 1 in SVC mode)

Settings 0.00–10.00

- IMSVC control mode only.
- The induction motor needs constant slip to produce electromagnetic torque. It can be ignored at higher motor speeds, such as rated speed or 2–3% of slip.
- However, during the drive operation, the slip and the synchronous frequency are in reverse proportion to produce the same electromagnetic torque. The slip is larger with the reduction of the synchronous frequency. Moreover, the motor may stop when the synchronous frequency decreases to a specific value. Therefore, the slip seriously affects the motor speed accuracy at low speed.

- In another situation, when you use an induction motor with the drive, the slip increases when the load increases. It also affects the motor speed accuracy.
- Use this parameter to set the compensation frequency, and reduce the slip to maintain the synchronous speed when the motor runs at the rated current in order to improve the accuracy of the drive. When the drive output current is higher than Pr.05-05 (No-load Current for Induction Motor 1 (A)), the drive compensates the frequency according to this parameter.
- This parameter is set to 1.00 automatically when Pr.00-11 (Speed Control Mode) is changed from V/F mode to vector mode. Otherwise, it is automatically set to 0.00. Apply the slip compensation after load and acceleration. Increase the compensation value from small to large gradually; add the output frequency to the [motor rated slip × Pr.07-27 (Slip Compensation Gain)] when the motor is at the rated load. If the actual speed ratio is slower than expected, increase the parameter setting value; otherwise, decrease the setting value.

07-29 Slip Deviation Level

Default: 0

Settings 0.0–100.0%
0: No detection

07-30 Over-slip Deviation Detection Time

Default: 1.0

Settings 0.0–10.0 sec.

07-31 Over-slip Deviation Treatment

Default: 0

Settings 0: Warn and continue operation
1: Fault and ramp to stop
2: Fault and coast to stop
3: No warning

- Pr.07-29–Pr.07-31 set the allowable slip level/time and the over-slip treatment when the drive is running.

07-32 Motor Oscillation Compensation Factor

Default: 1000

Settings 0–10000

- If there are current wave motions which cause severe motor oscillation in some specific area, setting this parameter can effectively improve this situation. (Set this parameter to 0. When the current wave motion occurs in low frequency and high power, increase the value for Pr.07-32.)

07-33 Auto-restart Interval of Fault

Default: 60.0

Settings 0.0–6000.0 sec.

- When a reset/restart occurs after a fault, the drive uses Pr.07-33 as a timer and starts counting the number of faults within this time period. Within this period, if the number of faults does not exceed the setting for Pr.07-11, the counting clears and starts from 0 when the next fault occurs.

07-38 PMSVC Voltage Feed Forward Gain

Default: 1.00

Settings 0.50–5.00

- Adjust the PMSVC voltage feedback forward gain, and to meet the demand of rapid feedback application.
- Pr.07-38 = 1.00 means forward feedback = Ke × motor rotor speed
- Refer to Section 12-2 “PMSVC adjustment” for detail.

07-46 OOB Sampling Time

Default: 1.0

Settings 0.1–120.0 sec.

07-47 Number of OOB Sampling Times

Default: 20

Settings 00–32

07-48 OOB Average Sampling Angle

Default: Read only

Settings Read only

- You can use the OOB (Out Of Balance Detection) function with the PLC program in the washing machine system. When the multi-function input terminal Pr.02-01–02-07 is set to 82 (OOB loading balance detection), the Pr.07-48 (OOB Average Sampling Angle) Δθ value is set according to Pr.07-46 (OOB Sampling Time) and Pr.07-47 (Number of OOB Sampling Times).
- The PLC or host controller determines the motor speed according to the Pr.07-48 (OOB Average Sampling Angle) Δθ value. When the Average Sampling Angle Δθ value is large, the load is unbalanced. In this case, the PLC or host controller must decrease the Frequency command. Otherwise, increase the Frequency command to execute high speed operations when Pr.07-48 Δθ value is small.
- Related parameters: Pr.02-01–Pr.02-07 (Multi-function Input Commands).

07-62 dEb Gain (Kp)

Default: 8000

Settings 0–65535

07-63 dEb Gain (Ki)

Default: 150

Settings 0–65535

- Sets the PI gain of DC bus voltage controller when the dEb function activates.
- If the DC bus voltage drops too fast, or the speed oscillation occurs during deceleration after the dEb function activates, adjust Pr.07-62 and Pr.07-63. Increase the Kp setting to quicken the control response, but the oscillation may occur if the setting is too large. Use Ki parameter to decrease the steady-state error to zero, and increase the setting to quicken the response speed.

08 High-function PID Parameters

You can set this parameter during operation.

08-00 Terminal Selection of PID Feedback

Default: 0

Settings
0: No function
1: Negative PID feedback: by analog input (Pr.03-00, 03-01)
2: Negative PID feedback: by single-phase input (MI7), without direction (Pr.10-16 = 5)
4: Positive PID feedback: by analog input (Pr.03-00, 03-01)
5: Positive PID feedback: by single-phase input (MI7), without direction (Pr.10-16 = 5)
7: Negative PID feedback: by communication protocols
8: Positive PID feedback: by communication protocols

Negative feedback:
Error = + Target value (set point) – Feedback. Use negative feedback when the detection value increases if the output frequency increases.

Positive feedback:
Error = - Target value (set point) + Feedback. Use positive feedback when the detection value decreases if the output frequency increases.

When Pr.08-00 ≠ 7 or ≠ 8, the input value is disabled. The setting value does not remain when the drive is powered off.

The related applicable parameters to set Pr.08-00 include:

- Pr.00-20 Master frequency command source (AUTO)
- Pr.03-00–03-01
  When Pr.00-20 = 2, set Pr.03-00–03-01 = 4 (PID target value)
  When Pr.08-00 = 1 or 4, set Pr.03-00–03-01 = 5 (PID feedback signal)
  Refer to the following description of details.

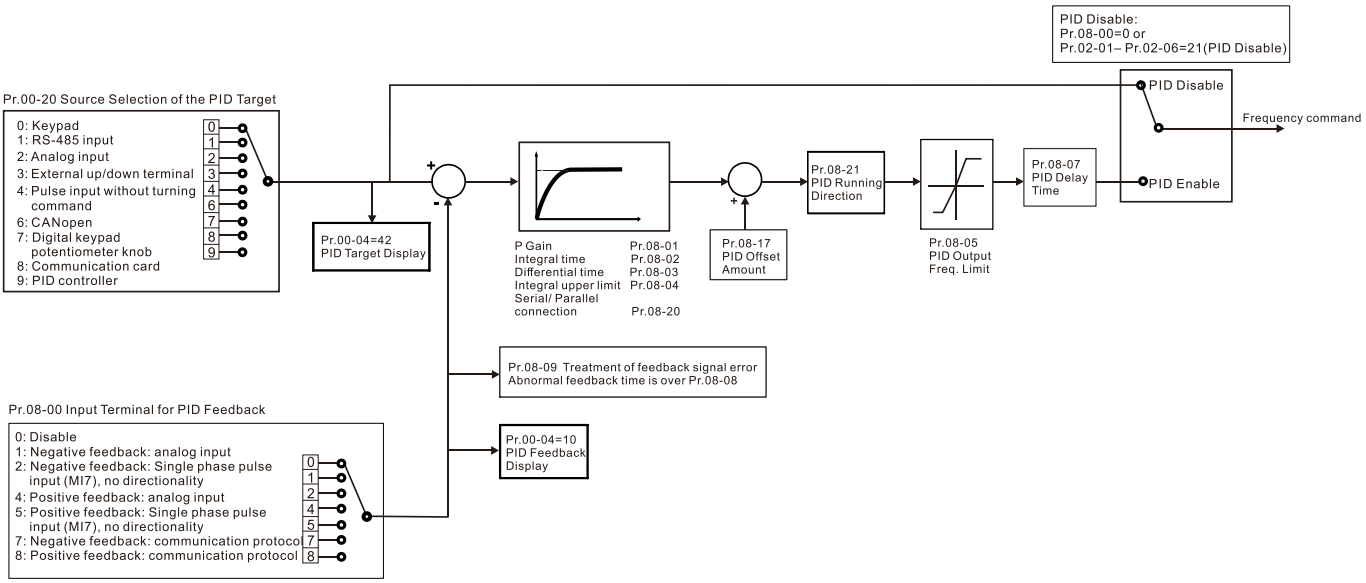

00-20 Master Frequency Command Source (AUTO, REMOTE)

Default: 0

Settings
0: Inputs from digital keypad
1: Inputs from RS-485 communication
2: Inputs from external analog (refer to Pr.03-00, Pr.03-01)
3: Inputs from external UP / DOWN terminals
4: Pulse inputs without direction command
(refer to Pr.10-16 without direction)
5: Pulse inputs with direction command (refer to Pr.10-16)
6: CANopen communication card
8: Communication cards (CANopen card not included)

03-00 AVI Analog Input Selection

03-01 ACI Analog Input Selection

Default: 0

Settings
4: PID target value
5: PID feedback signal

1. Common applications for PID control:
   - Flow control: Use a flow sensor to feedback the flow data and perform accurate flow control.
   - Pressure control: Use a pressure sensor to feedback the pressure data and perform precise pressure control.
   - Air volume control: Use an air volume sensor to feedback the air volume data to achieve excellent air volume regulation.
   - Temperature control: Use a thermocouple or thermistor to feedback temperature data for comfortable temperature control.
   - Speed control: Use a speed sensor-to feedback motor shaft speed or input another machine speed as a target value for synchronous control.
2. PID control loop:

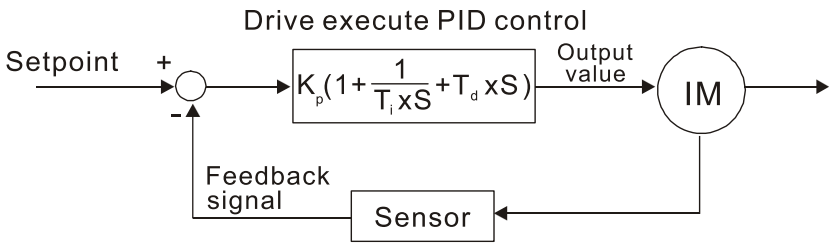

K_P Proportional Gain (P), Ti Integral Time (I), T_d Differential Time (D), S Calculation

3. Concept of PID control:

   Proportional gain (P):

   The output is proportional to input. With only a proportional gain control, there is always a steady-state error.

Integral time (I):

The controller output is proportional to the integral of the controller input. When an automatic control system is in a steady state and a steady-state error occurs, the system is called a System with Steady-state Error. To eliminate the steady-state error, add an “integral part” to the controller. The integral time controls the relation between the integral part and the error. The integral part increases over time even if the error is small. It gradually increases the controller output to eliminate the error until it is zero. This stabilizes the system without a steady-state error by using proportional gain control and integral time control.

Differential control (D):

The controller output is proportional to the differential of the controller input. During elimination of the error, oscillation or instability may occur. Use the differential control to suppress these effects by acting before the error. That is, when the error is near 0, the differential control should be 0. Use proportional gain (P) and differential control (D) to improve the system state during PID adjustment.

4. Using PID control in a constant pressure pump feedback application:

Set the application’s constant pressure value (bar) to be the set point of PID control. The pressure sensor sends the actual value as the PID feedback value. After comparing the PID set point and PID feedback, an error display.

The PID controller calculates the output by using proportional gain (P), integral time (I) and differential time (D) to control the pump. It controls the drive to use a different pump speed and achieves constant pressure control by using a 4–20 mA signal corresponding to 0–10 bar as feedback to the drive.

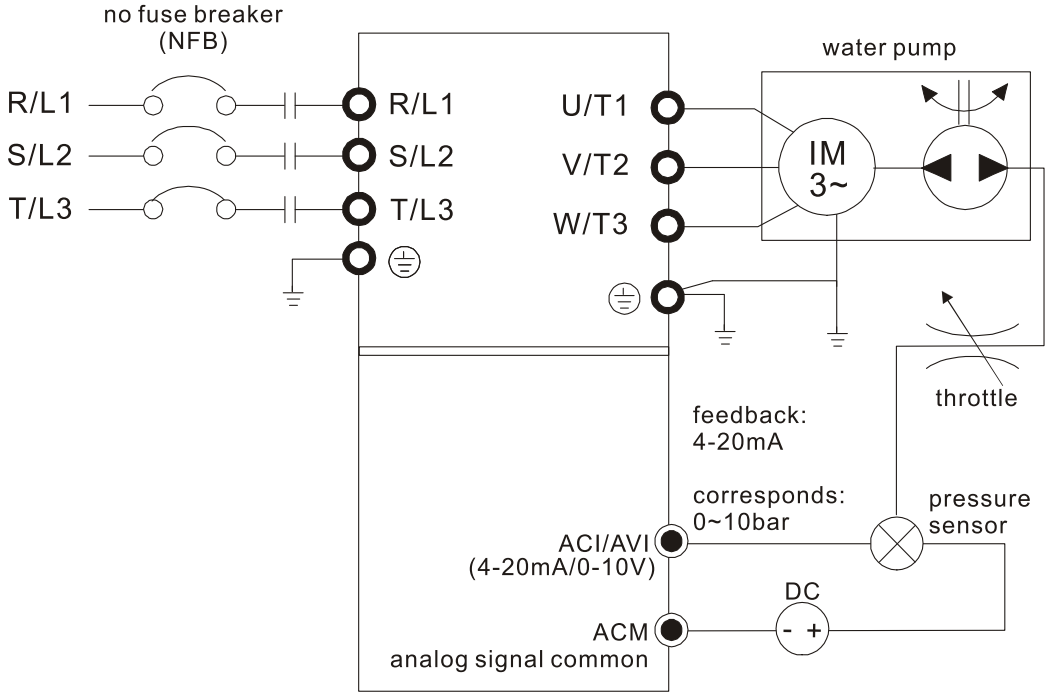

- Pr.00-04 = 10 (display PID feedback (b) (%))
- Pr.01-12 Acceleration Time is set according to actual conditions.
- Pr.01-13 Deceleration Time is set according to actual conditions.

- Pr.00-21 = 0, operate through the digital keypad
- Pr.00-20 = 0, the digital keypad controls the set point.
- Pr.08-00 = 1 (negative PID feedback from analog input).
- ACI analog input Pr.03-01 = 5, PID feedback signal.
- Pr.08-01-08-03 is set according to actual conditions.
  - If there is no oscillation in the system, increase Pr.08-01 (Proportional Gain (P)).
  - If there is no oscillation in the system, decrease Pr.08-02 (Integral Time (I)).
  - If there is no oscillation in the system, increase Pr.08-03 (Differential Time (D)).
- Refer to Pr.08-00–08-21 for PID parameter settings.

08-01 Proportional Gain (P)

Default: 1.00

Settings 0.0–1000.0 (When Pr.08-23 bit 1 = 0)
0.00–100.00 (When Pr.08-23 bit 1 = 1)

1.0: Kp gain is 100%; if the setting is 0.5, Kp gain is 50%.

Sets the proportional gain to determine the deviation response speed. The higher the proportional gain, the faster the response speed. Eliminates the system deviation; usually used to decrease the deviation and get faster response speed. If you set the value too high, overshoot occurs and it may cause system oscillation and instability.

If you set the other two gains (I and D) to zero, proportional control is the only effective parameter.

08-02 Integral Time (I)

Default: 1.00

Settings 0.00–100.00 sec.

Use the integral controller to eliminate the deviation during stable system operation. The integral control does not stop working until the deviation is zero. The integral is affected by the integral time. The smaller the integral time, the stronger the integral action. It is helpful to reduce overshoot and oscillation for a stable system. Accordingly, the speed to lower the steady-state deviation decreases. The integral control is often used with the other two controls for the PI controller or PID controller.

Sets the integral time of the I controller. When the integral time is long, there is a small I controller gain, with slower response and slow external control. When the integral time is short, there is a large I controller gain, with faster response and rapid external control.

When the integral time is too short, it may cause overshoot or oscillation for the output frequency and system.

Set Integral Time to 0.00 to disable the I controller.

08-03 Differential Time (D)

Default: 0.00

Settings 0.00–1.00 sec.

Use the differential controller to show the system deviation change, as well as to preview the change in the deviation. You can use the differential controller to eliminate the deviation in order

to improve the system state. Using a suitable differential time can reduce overshoot and shorten adjustment time; however, the differential operation increases noise interference. Note that a too large differential causes more noise interference. In addition, the differential shows the change and the differential output is 0 when there is no change. Note that you cannot use the differential control independently. You must use it with the other two controllers for the PD controller or PID controller.

- Sets the D controller gain to determine the deviation change response. Using a suitable differential time reduces the P and I controllers overshoot to decrease the oscillation for a stable system. A differential time that is too long may cause system oscillation.
- The differential controller acts on the change in the deviation and cannot reduce the interference. Do not use this function when there is significant interference.

08-04 Upper Limit of Integral Control

Default: 100.0

Settings 0.0–100.0%

- Defines an upper bound for the integral gain (I) and therefore limits the master frequency.
- The formula is: Integral upper bound = Maximum Operation Frequency (Pr.01-00) × (Pr.08-04%).
- An excessive integral value causes a slow response due to sudden load changes and may cause motor stall or machine damage. If so, decrease it to a proper value.

08-05 PID Output Command Limit (Positive Limit)

Default: 100.0

Settings 0.0–110.0%

- Defines the percentage of the output frequency limit during the PID control. The formula is Output Frequency Limit = Maximum Operation Frequency (Pr.01-00) × Pr.08-05%.

08-06 PID Feedback Value by Communication Protocol

Default: 0.00

Settings -200.00–200.00%

- Use communications to set the PID feedback value when the PID feedback input is set to communications (Pr.08-00 = 7 or 8).

08-07 PID Delay Time

Default: 0.0

Settings 0.0–2.5 sec.

08-20 PID Mode Selection

Default: 0

Settings 0: Serial connection
1: Parallel connection

- 0: Use conventional PID control structure.
  1: The proportional gain, integral gain and differential gain are independent. You can customize the P, I and D value to fit your application.
- Pr.08-07 determines the primary low pass filter time when in PID control. Setting a large time constant may slow down the drive's response speed.

- PID control output frequency is filtered with a primary low pass function. This function can filter a mix of frequencies. A long primary low pass time means the filter degree is high and a short primary low pass time means the filter degree is low.
- Inappropriate delay time setting may cause system oscillation.
- PI Control:
  Controlled only by the P action, so the deviation cannot be entirely eliminated. In general, to eliminate residual deviations, use the P + I controls. When you use the PI control, it eliminates the deviation caused by the targeted value changes and the constant external interferences. However, if the I action is too powerful, it delays the response when there is rapid variation. You can use the P action by itself to control the loading system with the integral components.
- PD Control:
  When deviation occurs, the system immediately generates an operation load that is greater than the load generated only by the D action to restrain the deviation increment. If the deviation is small, the effectiveness of the P action decreases as well. The control objects include applications with integral component loads, which are controlled by the P action only. Sometimes, if the integral component is functioning, the whole system may oscillate. In this case, use the PD control to reduce the P action's oscillation and stabilize the system. In other words, this control is useful with no brake function's loading over the processes.
- PID Control:
  Use the I action to eliminate the deviation and the D action to reduce oscillation; then combine this with the P action for the PID control. Use the PID method for a control process with no deviations, high accuracy, and a stable system.

Serial connection

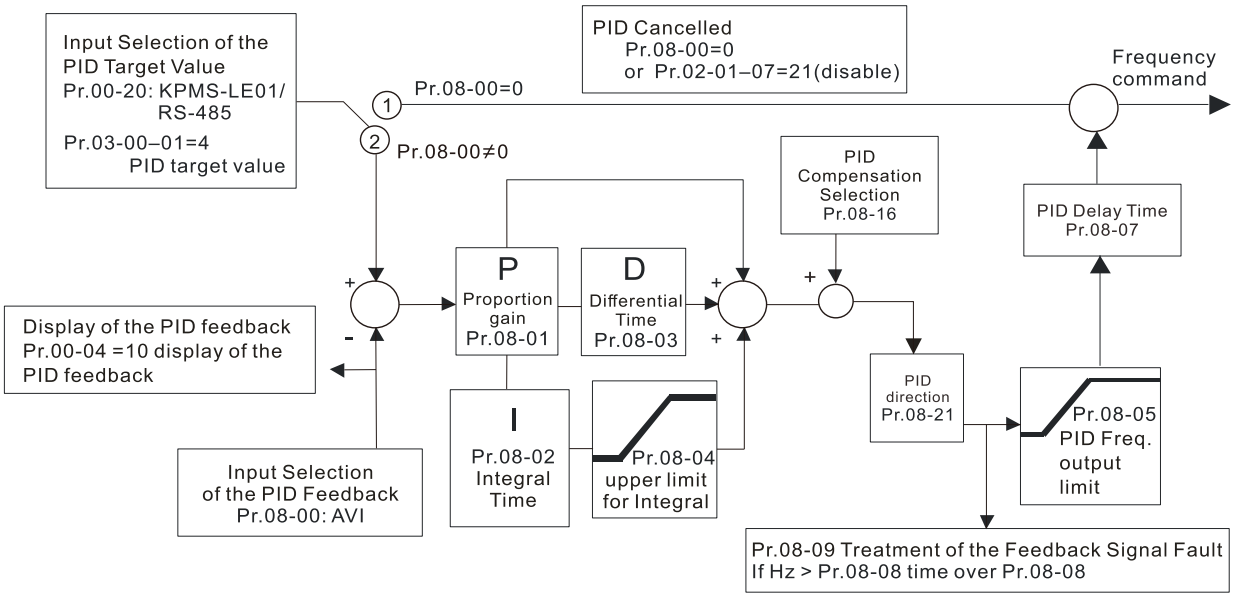

Parallel connection

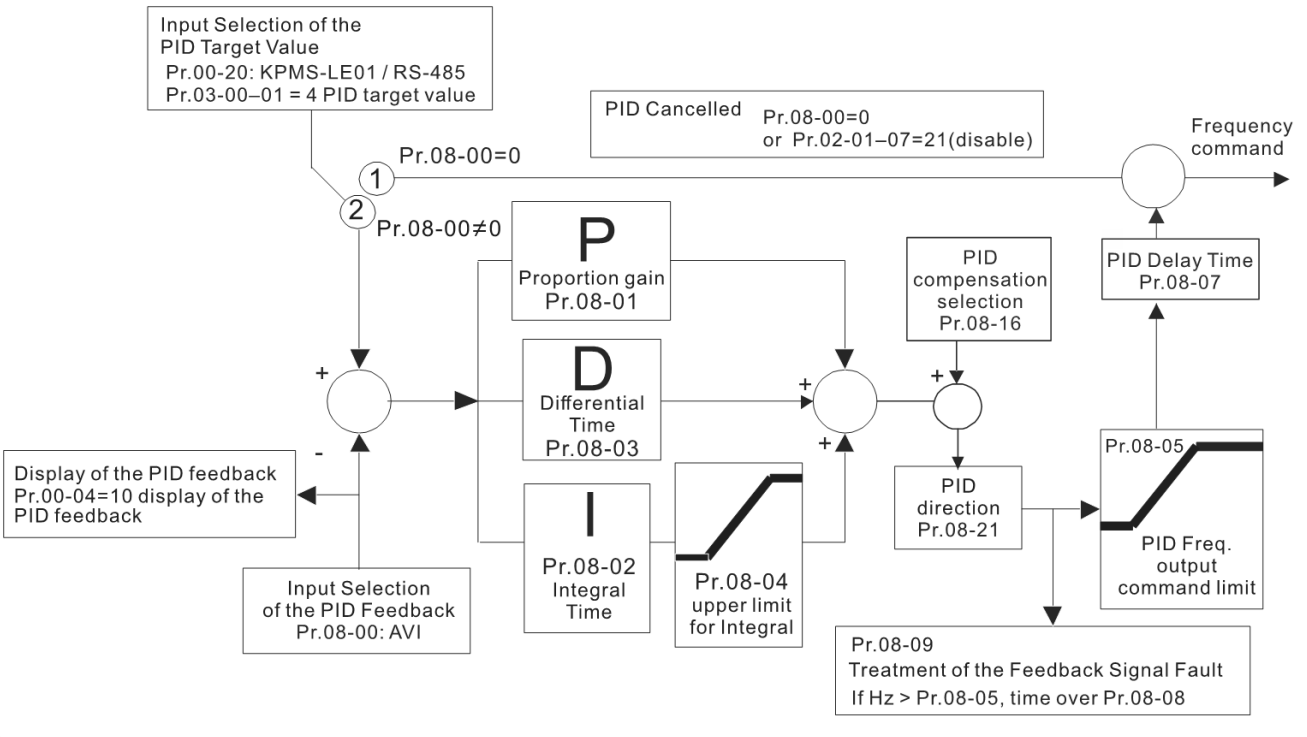

08-08 Feedback Signal Detection Time

Default: 0.0

Settings 0.0–3600.0 sec.

- Valid only when the feedback signal is ACI (4–20 mA).
- This parameter sets the detection time for abnormal PID signal feedback. You can also use it when the system feedback signal response is extremely slow. (Setting the detection time to 0.0 disables the detection function.)

08-09 Feedback Signal Fault Treatment

Default: 0

Settings 0: Warn and continue operation
1: Fault and ramp to stop
2: Fault and coast to stop
3: Warn and operate at last frequency

- Valid only when the feedback signal is ACI (4–20 mA).
- Sets the treatments when the PID feedback signal is abnormal.

08-10 Sleep Level

Default: 0.00

Settings 0.00–599.00 Hz / 0.00–200.00%

08-11 Wake-up Level

Default: 0.00

Settings 0.00–599.00 Hz / 0.00–200.00%

- Determines the sleep frequency, and if the sleep time and the wake-up frequency are enabled or disabled.
- Pr.08-10 = 0: Disabled; Pr.08-10 ≠ 0: Enabled

- When Pr.08-18 = 0, the unit for Pr.08-10 and that for Pr.08-11 switch to frequency. The settings are between 0.00–599.00 Hz.
- When Pr.08-18 = 1, the unit for Pr.08-10 and that for Pr.08-11 switch to percentage. The settings are between 0.00–200.00%.
- The percentage is based on the current command value, not the maximum value. For example, if the maximum value is 100 kg, and the current command value is 30 kg, then if Pr.08-11=40%, the value is 12 kg.

08-12 Sleep Delay Time

Default: 0.0

Settings 0.0–6000.0 sec.

- When the Frequency command is smaller than the sleep frequency and less than the sleep time, the Frequency command is equal to the sleep frequency. However, the Frequency command remains at 0.00 Hz until the Frequency command becomes equal to or larger than the wake-up frequency.

08-13 PID Feedback Signal Error Deviation Level

Default: 10.0

Settings 1.0–50.0%

08-14 PID Feedback Signal Error Deviation Detection Time

Default: 5.0

Settings 0.1–300.0 sec.

08-15 PID Feedback Signal Filter Time

Default: 5.0

Settings 0.1–300.0 sec.

- When the PID control function is normal, it should calculate the value within a period of time that is close to the target value.
  Refer to the PID control diagram for details. When executing PID feedback control, if |PID reference target value - detection value| > Pr.08-13 PID Feedback Signal Error Deviation Level and time exceeds Pr.08-14 setting, it is regarded as a PID control fault, and the multi-function output terminal setting 15 (PID feedback error) activates.

08-16 PID Compensation Selection

Default: 0

Settings 0: Parameter setting
1: Analog input

- 0: The setting for Pr.08-17 gives the PID compensation value.

08-17 PID Compensation

Default: 0

Settings -100.0–100.0%

- The PID compensation value = maximum PID target value × Pr.08-17. For example, if the maximum operation frequency Pr.01-00 = 60 Hz, and Pr.08-17 = 10.0%, the PID compensation value increases the output frequency 6.00 Hz (60.00 Hz × 100.00% × 10.0% = 6.00 Hz).

08-18 Sleep Mode Function Setting

Default: 0

Settings 0: Refer to PID output command
1: Refer to PID feedback signal

- 0: The unit for Pr.08-10 and that for Pr.08-11 switch to frequency. The settings are between 0.00–599.00 Hz.
- 1: The unit for Pr.08-10 and that for Pr.08-11 switch to percentage. The settings are between 0.00–200.00%.

08-19 Wake-up Integral Limit

Default: 50.0

Settings 0.0–200.0%

- Reduces the reaction time from sleep to wake-up.
- Defines the wake-up integral frequency limit = (Pr.01-00 × Pr.08-19%)

08-21 Enable PID to Change the Operation Direction

Default: 0

Settings 0: Operation direction cannot be changed
1: Operation direction can be changed

08-22 Wake-up Delay Time

Default: 0.00

Settings 0.00–600.00 sec.

- Refer to Pr.08-18 for more information.

08-23 PID Control Flag

Default: 2

Settings bit 0 = 1, PID running in reverse follows the setting for Pr.00-23.
bit 0 = 0, PID running in reverse refers to PID's calculated value.
bit 1 = 1, two decimal places for PID Kp
bit 1 = 0, one decimal place for PID Kp

- bit 0 = 1: PID running in reverse function is valid only when Pr.08-21 = 1.
- bit 0 = 0: If the PID calculated value is positive, the direction is forward. If the PID calculated value is negative, the direction is reverse.
- When the bit1 setting changes, the Kp gain does not change.
  For example: Kp = 6. When Pr.08-23 bit1 = 0, Kp = 6.0; when Pr.08-23 bit1 = 1, Kp = 6.00.

There are three scenarios for the sleep and wake-up frequency.

1. Frequency Command (PID is not in use, Pr.08-00 = 0. Works only in VF mode)

   When the output frequency reaches the sleep level (Pr.08-10), the drive operates in sleep level and starts to count the sleep delay time (Pr.08-12).

   When the Frequency command reaches the wake-up level (Pr.08-11), the drive starts to count the wake-up delay time (Pr.08-22). When the drive counts exceeding the wake-up delay time, it starts to catch up to reach the Frequency command value by the acceleration time.

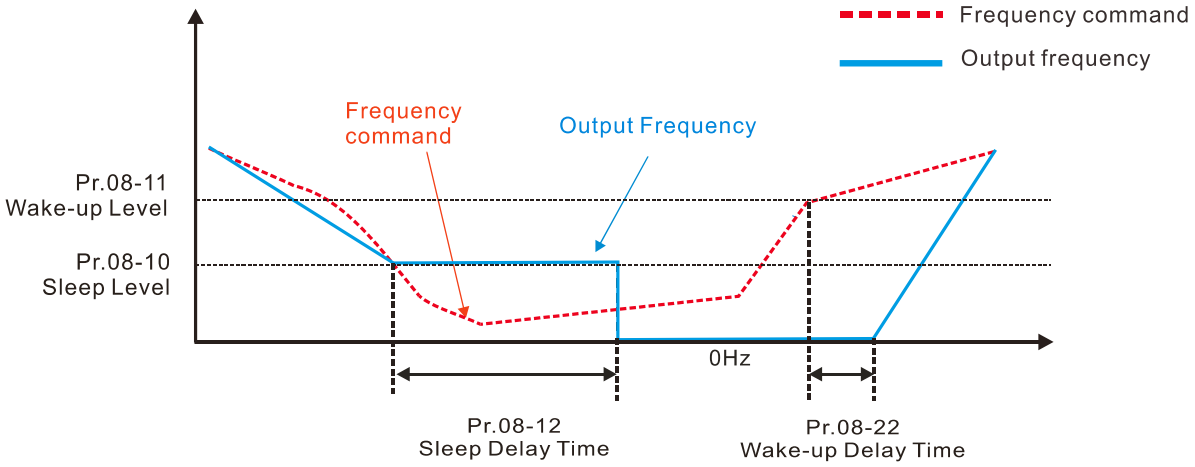

2. Internal PID Calculation Frequency Command (PID is in use, Pr.08-00 ≠ 0 and Pr.08-18=0.)

   When the PID calculation Frequency command reaches the sleep level (Pr.08-10), the drive starts to count the sleep delay time (Pr.08-12).When the drive counts exceeding the sleep delay time, the drive is in sleep mode (0 Hz). If the drive does not reach the preset sleep time, the output frequency remains at the lower frequency limit (if the lower limit is not set to zero), or it remains at the minimum output frequency set for Pr.01-07 (if the lower limit is set to zero) and waits until it reaches the sleep delay time before going into sleep mode (0 Hz). When the PID calculated Frequency command reaches the wake-up frequency, the drive starts to count the wake-up delay time (Pr.08-22). Once it exceeds the wake-up delay time, the drive starts to catch up to reach the PID Frequency command value by the acceleration time.

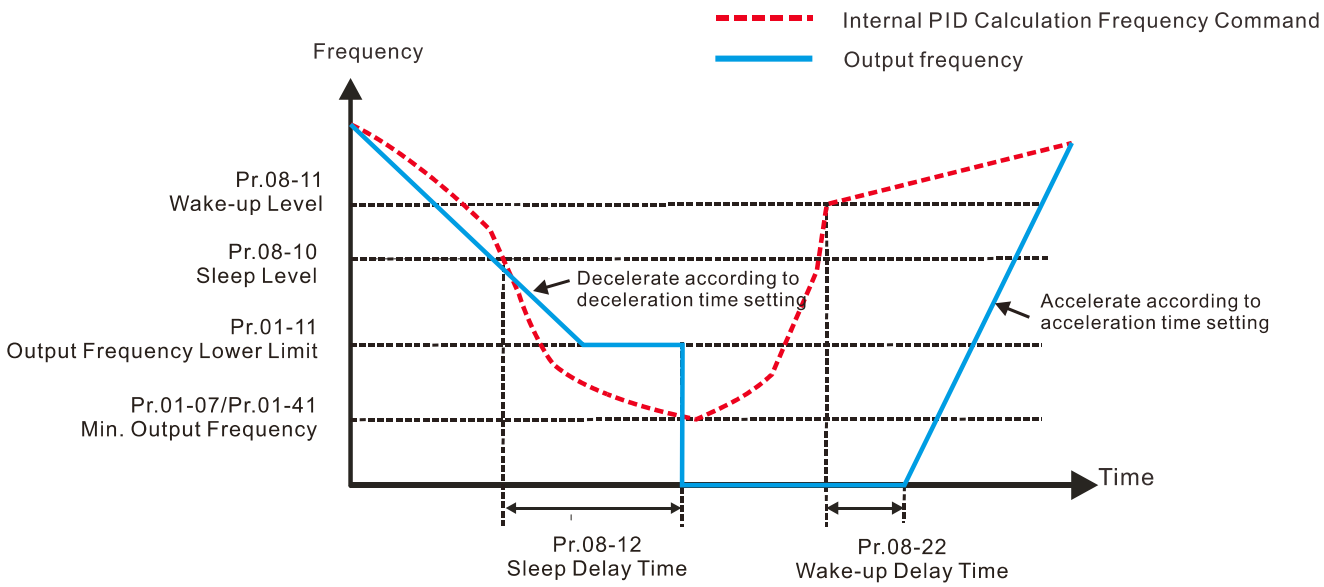

3. PID Feedback Value Percentage (PID is in use, Pr.08-00 ≠ 0 and Pr.08-18 = 1)

When the PID feedback value reaches the sleep level (Pr.08-10), the drive starts to count the sleep delay time (Pr.08-12). If the drive counts exceeding the sleep delay time, the drive is in sleep mode (0 Hz). If the drive does not reach the preset sleep delay time, it remains at the lower frequency limit (if the lower limit is not set to zero), or it remains at the minimum output frequency set for Pr.01-07 (if the lower limit is set to zero) and waits until it reaches the sleep time before going into sleep mode (0 Hz).

When the PID feedback value reaches the wake-up level (Pr.08-11), the drive starts to count the wake-up delay time (Pr.08-22). Once it counts exceeding the wake-up delay time, the drive starts to catch up to reach the PID Frequency command value by the acceleration time.

Example 01: PID negative feedback

- Pr.08-10 must > Pr.08-11
- 30kg is the reference
- Set the parameter:

  Pr.03-00 = 5 (AVI is PID feedback)

  Pr.08-00 = 1 (PID negative feedback: AVI simulation input function select)

  Pr.08-10 = 40% (Sleep reference: 12 kg = 40% × 30 kg)

  Pr.08-11 = 20% (Wake-up reference: 6 kg = 20% × 30 kg)

  Case 01: If feedback >12kg, frequency decreases.

  Case 02: If feedback < 6kg, frequency increases.

Area	PID Physical Quantity
Sleep area	> 12 kg, the drive goes into sleep, the motor goes into sleep
Excessive area	between 6 kg and 12 kg, the drive remains in current state
Wake-up area	< 6 kg, the drive wakes-up, the motor wakes-up

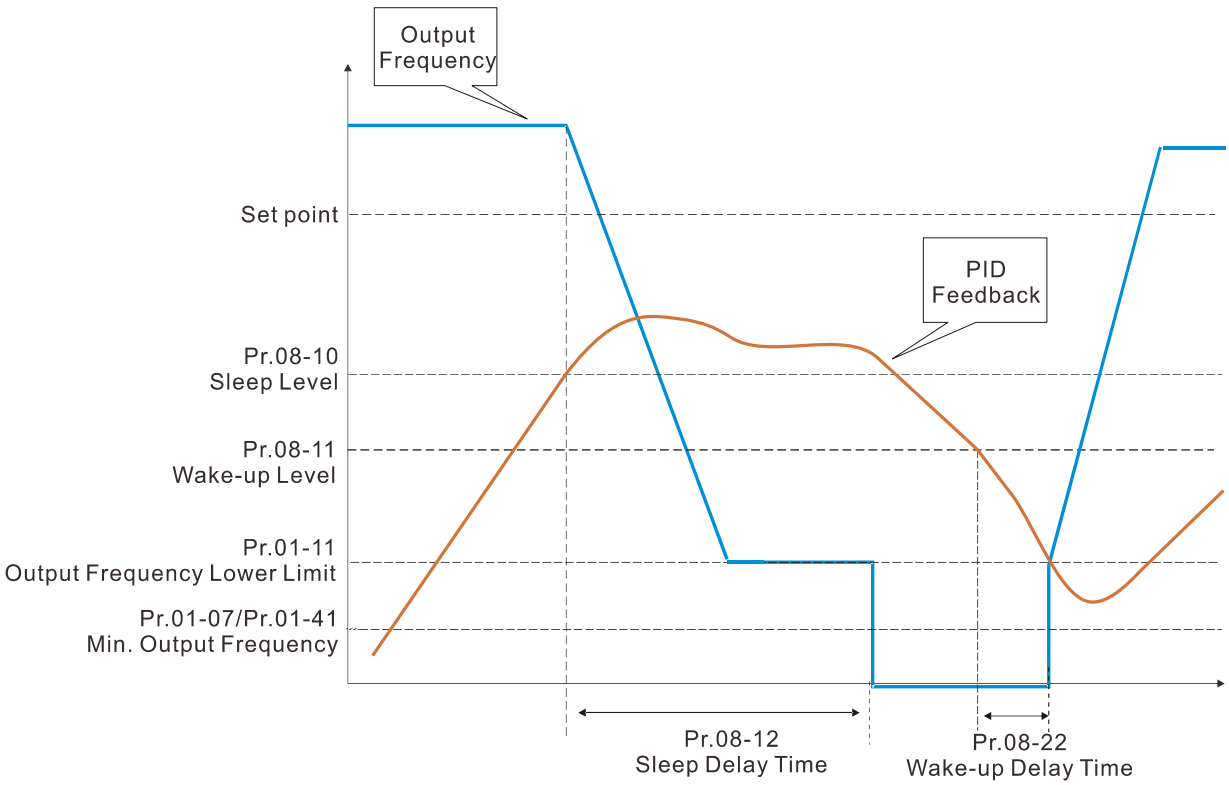

Example 02: PID positive feedback

- Pr.08-10 must < Pr.08-11
- 30kg is the reference
- Set the parameter:

  Pr.03-00 = 5 (AVI is PID feedback)

  Pr.08-00 = 4 (PID positive feedback: AVI simulation input function select)

  Pr.08-10 = 110% (Sleep reference: 33 kg = 110% × 30 kg)

  Pr.08-11 = 120% (Wake-up reference: 36 kg = 120% × 30 kg)

  Case 01: If feedback < 33kg, frequency decreases.

  Case 02: If feedback > 36kg, frequency increases.

Area	PID Physical Quantity
Sleep area	> 36 kg, the drive goes into sleep, the motor goes into sleep
Excessive area	between 33 kg and 36 kg, the drive remains in the current state
Wake-up area	< 33 kg, the drive wakes-up

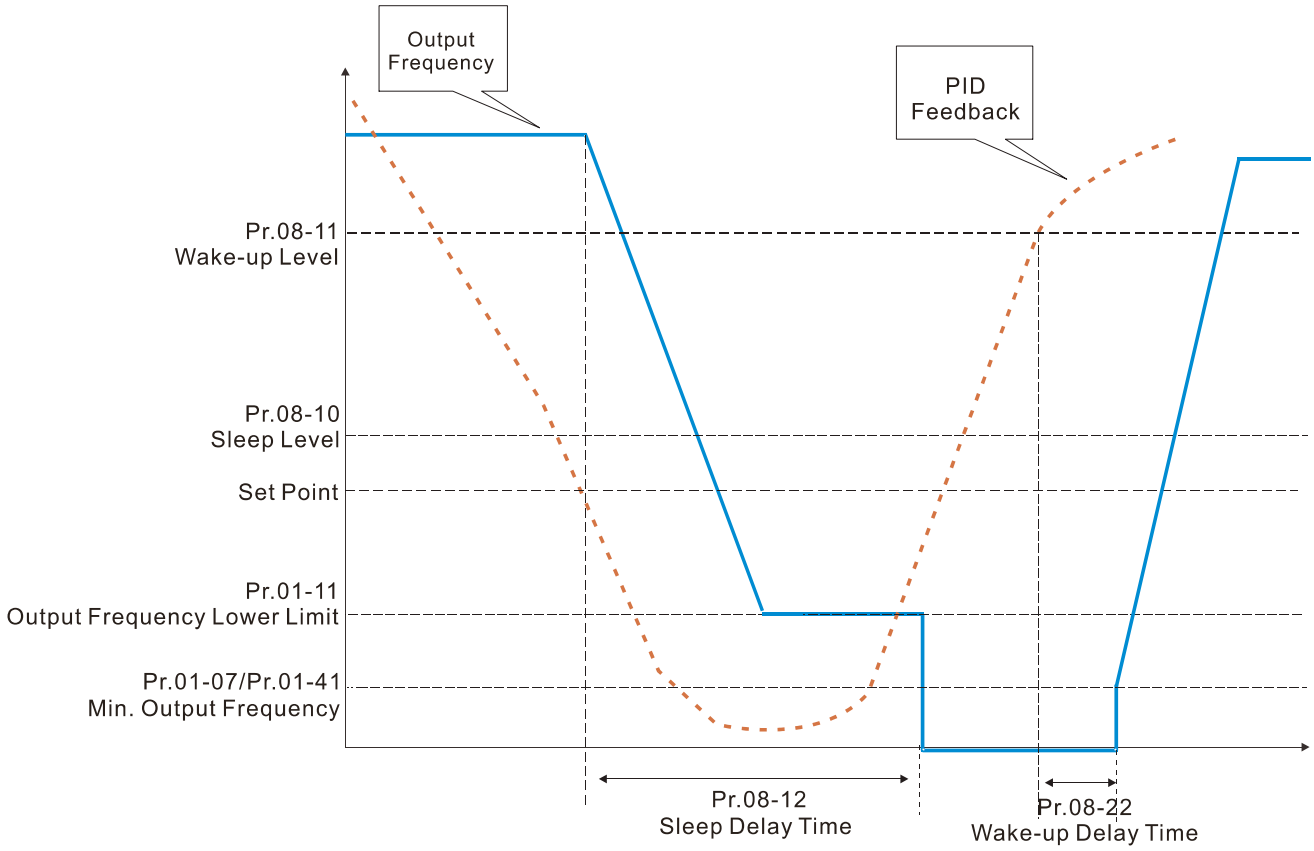

08-26 PID Output Command Limit (Reverse Limit)

Default: 100.0

Settings 0.0–100.0%

When PID enables the reverse direction, the PID output is a negative value, and the PID output value is limited by the setting for Pr.08-26. Use this function with Pr.08-21.

08-27 Acceleration / Deceleration Time for PID Command

Default: 0.00

Settings 0.00–655.35 sec.

0.00 seconds: Disables the PID acceleration/deceleration command, and the target value is equal to the PID command.

📖 When this parameter is not set to 0.00 seconds: Enables the PID acceleration/deceleration command. For PID acceleration and deceleration, when the PID target value changes, the command value increment/decrement is executed according to this parameter.
For example, if we set this parameter to 10.00 seconds, when PID target value changes from 0% to 100%, it takes 10 seconds for the PID command to change from 0% to 100%. In a similar way, when PID target value changes from 100% to 0%, it takes 10 seconds for the PID command to change from 100% to 0%.

08-29 Frequency Base Corresponding to 100.00% PID

Default: 0

Settings
0: PID control output 100.00% corresponding to maximum operation frequency (Pr.01-00)
1: PID control output 100.00% corresponding to the input value of the auxiliary frequency

📖 Valid only when you enable the master and auxiliary frequency functions.
When Pr.08-29 = 0, PID control outputs 100.00% corresponding to the maximum operation frequency. When Pr.08-29 = 1, PID control outputs 100.00% corresponding to the auxiliary frequency. (The PID output frequency changes when the auxiliary frequency command changes.)

08-31 Proportional Gain 2

Default: 1.00

Settings
0.0–1000.0 (when Pr.08-23 setting bit 1 = 0)
0.00–100.00 (when Pr.08-23 setting bit 1 = 1)

08-32 Integral Time 2

Default: 1.00

Settings
0.00–100.00 sec.

08-33 Differential Time 2

Default: 0.00

Settings
0.00–1.00 sec.

08-65 PID Target Value Source

Default: 0

Settings
0: Frequency command (Pr.00-20, Pr.00-30)
1: Pr.08-66 setting
2: RS-485 communication input
3: External analog input (refer to Pr.03-00, Pr.03-01)
4: CANopen communication card
6: Communication card (does not include CANopen card)
7: Digital keypad potentiometer knob

📖 Selects the target value source for the PID controller.

📖 When Pr.08-65 = 0, the maximum operating frequency Pr.01-00 is 60 Hz, the error is 100%, and Pr.08-01 = 1.00, then the output frequency is "1" times the Pr.01-00 maximum operating frequency. Therefore, the output frequency = 60 × 100% × 1=60 Hz.

Calculation formula:

Output frequency = Fmax (Pr.01-00) × error% ((PID reference value (Pr.00-20 / Pr.00-30) – PID feedback (Pr.08-00)) × Pr.08-01.

When Pr.08-65 ≠ 0, the internal calculation of the proportional gain reduces by 100 times, that is, when Pr.01-00 Fmax = 60 Hz, error = 100%, Pr.08-01=1.00, then the output frequency is "0.01" times the Pr.01-00 Fmax. Therefore, the output frequency = 60 × 100% × 0.01=0.6 Hz.

Calculation formula:

Output frequency = Fmax (Pr.01-00) × error% ((PID reference value (Pr.08-66) – PID feedback value (Pr.08-00)) × Pr.08-01 × 0.01.

When Pr.08-65 = 0, the PID controller architecture shows as the diagram below:

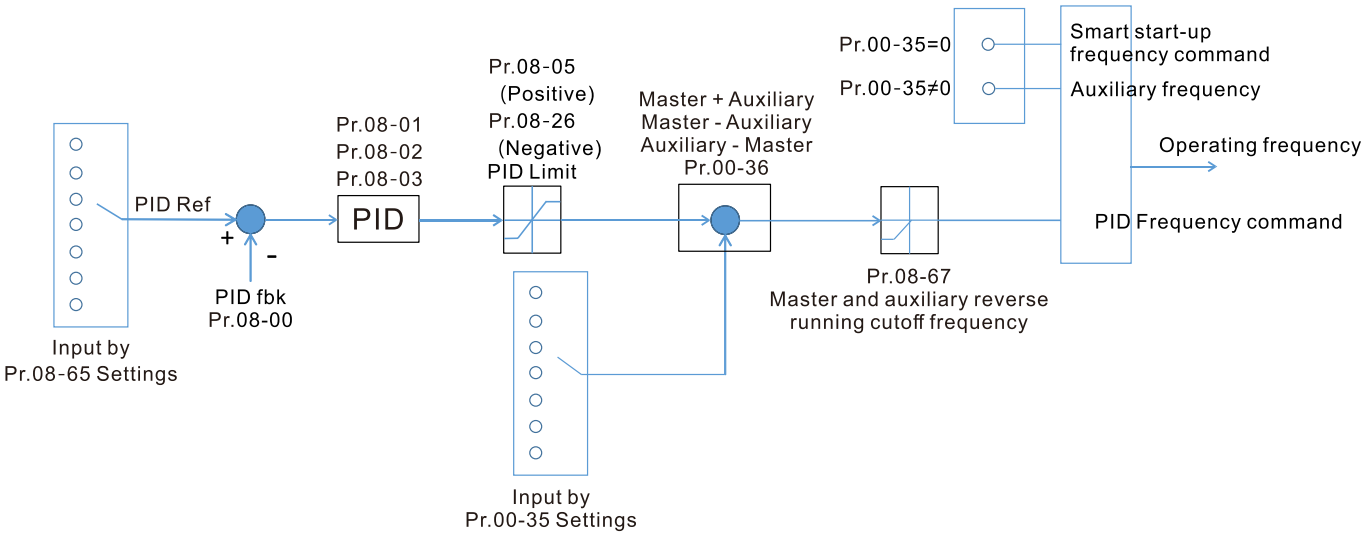

When Pr.08-65 ≠ 0, the PID controller architecture shows as the diagram below:

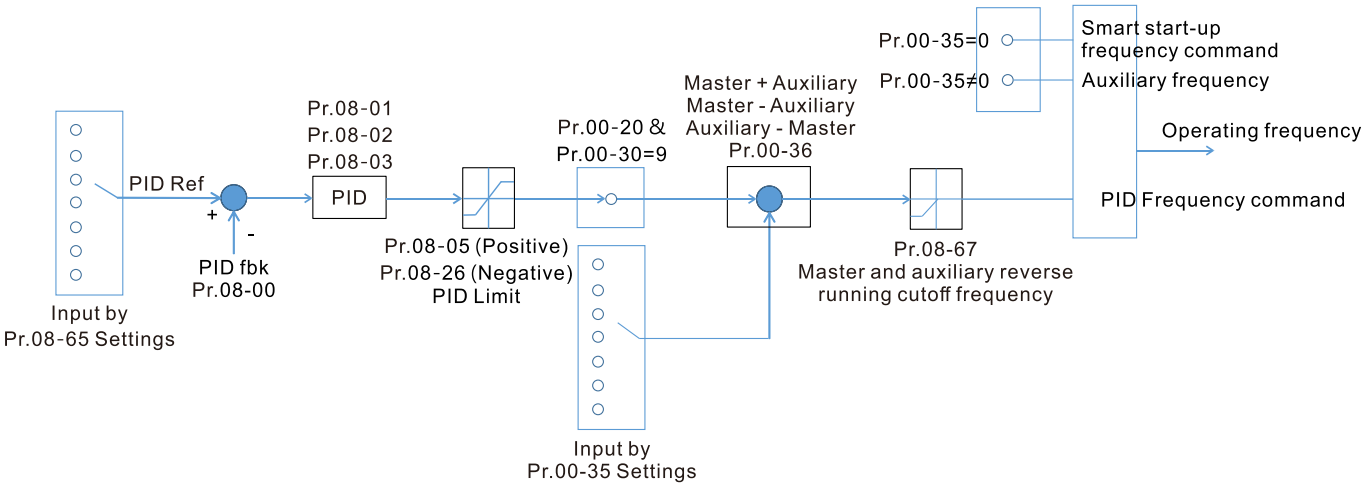

When Pr.08-65 is not set to 0, Pr.00-20 is automatically set to 9.

When Pr.08-65 is set to 1, set the PID command through Pr.08-66; when Pr.08-65 is not set to 1, Pr.08-66 displays the PID command.

When Pr.08-65 is set to 2, 4, and 6, the corresponding communication address is 2003H.

08-66 PID Target Value Setting

Default: 50.00

Settings -100.00–100.00%

The target value setting of the PID controller (Pr.08-66) is a relative value.

08-67 Master and Auxiliary Reverse Running Cutoff Frequency

Default: 10.0

Settings 0.0–100.0%

100% corresponds to Pr.01-00 the maximum operation frequency

In some cases, it is only possible for the PID to control the set point and the feedback to the same status when the PID output frequency is negative (the motor runs in reverse). However, an excessively high reverse frequency is not allowed in some cases, and Pr.08-67 is used to determine the upper limit of the reverse frequency.

08-68 PID Deviation Limit

Default: 0.00

Settings 0.00–100.00%

When Pr.08-68 is not set to 0, the PID deviation limit function is enabled.

When PID deviation ≤ PID deviation limit, PID stops adjusting, which means the PID output frequency maintains the value at last status. This function is effective for some closed-loop control applications.

08-69 Integral Separation Level

Default: 0.00

Settings 0.00–100.00%

Reduces overshoot when overshoot occurs in the PID feedback at start-up.

When Pr.08-69 is not set to 0, the integral separation function is enabled.

The benchmark for the integral separation level is the PID error %.

The integral separation function activates only once at start-up.

When PID deviation ≥ Pr.08-69, the integral effect is cancelled to avoid the increasing system overshoot due to the integral effect. When PID deviation is smaller than Pr.08-69, the integral effect is activated to eliminate the steady-state error.

08-70 Smart Start-Up Level

Default: 5.00

Settings 0.00–100.00%

08-71 Smart Start-Up Frequency Command

Default: 0.00

Settings 0.00–599.00 Hz

08-72 Smart Start-Up Acceleration Time

Default: 3.00

Settings 0.00–600.00 sec.

When Pr.08-71 is not set to 0, the smart start-up function is enabled.

- The benchmark for the smart start-up level is the percentage of PID deviation.
- Use the smart start-up function to reduce overshoot when overshoot occurs in the PID feedback at start-up. The smart start-up activates only once at start-up.
- When the smart start-up function is enabled, it starts with the Pr.08-71 frequency and Pr.08-72 acceleration time (Pr.08-72 acceleration time is the time that it accelerates to Pr.08-71). When the PID deviation is smaller than Pr.08-70, it switches to the normal PID control (the smart start-up frequency is filled into the PID integral when switching to PID control to avoid discontinuous frequency).

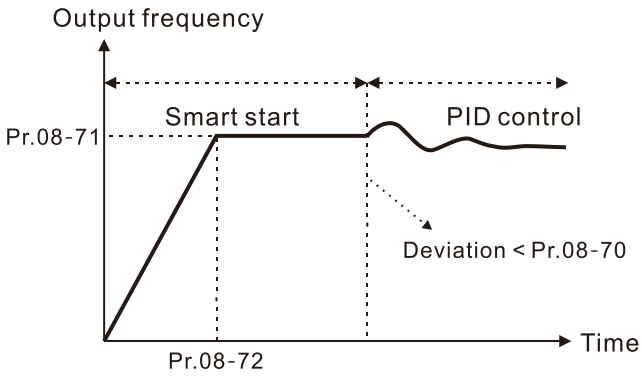

08-75 PID2 Parameter Switch Condition

Default: 0

Settings 0: No switching (refer to Pr.08-01–Pr.08-03)
1: Auto-switch based on the output frequency
2: Auto-switch based on the deviation

08-76 PID2 Parameter Switch Deviation 1

Default: 10.00

Settings 0.00–Pr.08-77%

08-77 PID2 Parameter Switch Deviation 2

Default: 40.00

Settings Pr.08-76–100.00%

- A set of PID parameters cannot meet the requirements of the entire running process in some applications. Use Pr.08-75 to switch to the second set of PID parameters Pr.08-31–08-33. The setting method for Pr.08-31–08-33 is the same as that for Pr.08-01–08-03.
- The two sets of PID parameters switch automatically according to the frequency and deviation.
- Switch according to the output frequency:
  When the output frequency is between Pr.01-07 and Pr.01-00, the PID parameter is the linear interpolation value between the two PID parameter groups.

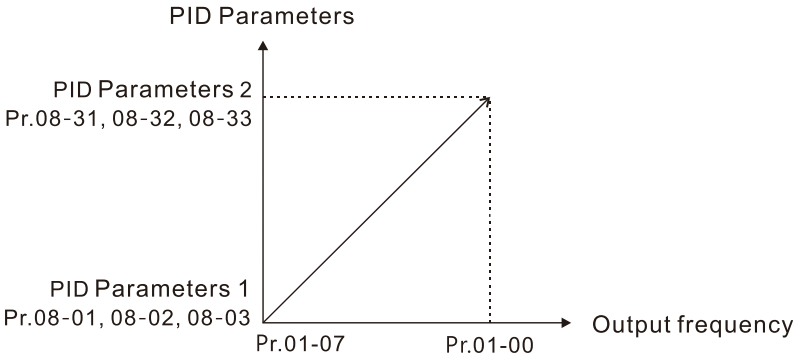

Switch according to the deviation:

- When the deviation absolute value between the set point and feedback is smaller than Pr.08-76 (PID2 Parameter Switch Deviation 1), the first group PID parameters are used.
- When the deviation absolute value between the set point and feedback is larger than Pr.08-77 (PID2 Parameter Switch Deviation 2), the second group PID parameters are used.
- When the deviation absolute value between the set point and feedback is between Pr.08-76 and Pr.08-77, the PID parameter is the linear interpolation value between the two PID parameter groups.

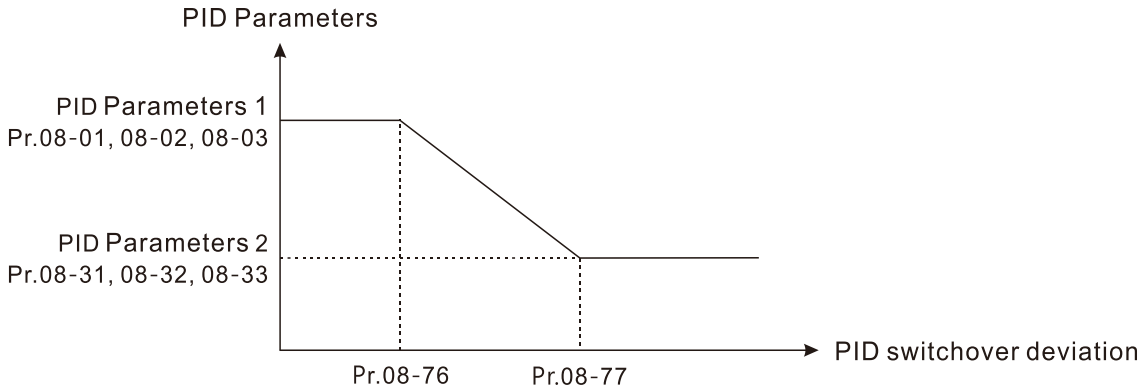

08-78 Allowed Reverse Running Time after Start-Up

Default: 0.0

Settings 0.0–6553.5 sec.

- When Pr.08-78 is not set to 0, the allowed reverse running time after start-up is enabled.
- When it is set to 1 second, the PID control is not allowed to change the running direction within 0–1 seconds of starting time (Pr.08-21 = 0), and is allowed to change after 1 second of starting time (Pr.08-21 = 1).

[This page is intentionally left blank]

09 Communication Parameters

When using the communication interface, the diagram on the right shows the communication port pin definitions. We recommend that you connect the AC motor drive to your PC by using Delta IFD6530 orIFD6500 as a communication converter.

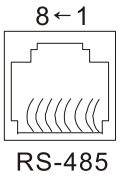

Modbus RS-485
Pin 1, 2, 6: Reserved
Pin 3, 7: SGND
Pin 4: SG-
Pin 5: SG+
Pin 8: +10VS

You can set this parameter during operation.

09-00 Modbus Communication Address

Default: 1

Settings 1–254

Sets the communication address for the drive if the AC motor drive is controlled through RS-485 serial communication. The communication address for each AC motor drive must be unique.

09-01 Modbus Transmission Speed

Default: 9.6

Settings 4.8–115.2 Kbps

Sets the transmission speed between the computer and the AC motor drive.

Options are 4.8 Kbps, 9.6 Kbps, 19.2 Kbps, 38.4 Kbps, 57.6 Kbps, or 115.2 Kbps; otherwise, the transmission speed is set to the default 9.6 Kbps.

09-02 Modbus Transmission Fault Treatment

Default: 3

Settings 0: Warn and continue operation
1: Fault and ramp to stop
2: Fault and coast to stop
3: No warning, no fault, and continue operation

Determines the treatment when an error is detected that the host controller does not continuously transmit data to the AC motor drive during Modbus communication. The detection time is based on the Pr.09-03 setting.

When a transmission error occurs (for example, the error code CE10 displays), the error remains even if the transmission status returns to normal, and is not cleared automatically. In this case, set a reset command (Reset) to clear the error.

09-03 Modbus Time-Out Detection

Default: 0.0

Settings 0.0–100.0 sec.

Sets the communication time-out value.

09-04 Modbus Communication Protocol

Default: 1

Settings 1: 7, N, 2 (ASCII)
2: 7, E, 1 (ASCII)
3: 7, O, 1 (ASCII)

4: 7, E, 2 (ASCII)
5: 7, O, 2 (ASCII)
6: 8, N, 1 (ASCII)
7: 8, N, 2 (ASCII)
8: 8, E, 1 (ASCII)
9: 8, O, 1 (ASCII)
10: 8, E, 2 (ASCII)
11: 8, O, 2 (ASCII)
12: 8, N, 1 (RTU)
13: 8, N, 2 (RTU)
14: 8, E, 1 (RTU)
15: 8, O, 1 (RTU)
16: 8, E, 2 (RTU)
17: 8, O, 2 (RTU)

Control by PC (Computer Link)

When using the RS-485 serial communication interface, you must specify each drive's communication address in Pr.09-00. The computer then implements control using the drives' individual addresses.

Modbus ASCII (American Standard Code for Information Interchange): Each byte of data is the combination of two ASCII characters. For example, one byte of data: 64 Hex, shown as '64' in ASCII, consists of '6' (36Hex) and '4' (34Hex).

09-09 Communication Response Delay Time

Default: 2.0

Settings 0.0–200.0 ms

If the host controller does not finish the transmitting/receiving process, you can use this parameter to set the response delay time after the AC motor drive receives communication command as shown in the following picture.

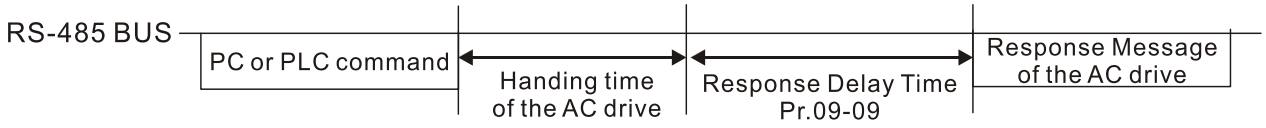

09-10 Communication Main Frequency

Default: 60.00

Settings 0.00–599.00 Hz

When you set Pr.00-20 to 1 (RS-485 communication input), the AC motor drive saves the last Frequency command into Pr.09-10 when there is abnormal power off or momentary power loss. When power is restored, the AC motor drive operates with the frequency in Pr.09-10 if there is no new Frequency command input. When a Frequency command of 485 changes (the Frequency command source must be set as Modbus), this parameter also changes.

09-11 Block Transfer 1

09-12 Block Transfer 2

09-13	Block Transfer 3
09-14	Block Transfer 4
09-15	Block Transfer 5
09-16	Block Transfer 6
09-17	Block Transfer 7
09-18	Block Transfer 8
09-19	Block Transfer 9
09-20	Block Transfer 10
09-21	Block Transfer 11
09-22	Block Transfer 12
09-23	Block Transfer 13
09-24	Block Transfer 14
09-25	Block Transfer 15
09-26	Block Transfer 16

Default: 0

Settings 0–65535

There is a group of block transfer parameters available in the AC motor drive (Pr.09-11–09-26). Using communication code 03H, you can store the parameters (Pr.09-11–09-26) that you want to read.

For example: according to the Address List (as shown in the table below), Pr.01-42 is shown as 012A. Set Pr.09-11 to 012Ah (the minimum voltage of Pr.01-42 M2 is 2.0 V), and use Pr.09-11 (communication address 090B) to read the communication parameter, the read value is 2.0.

AC motor drive parameters	GGnnH	GG is the parameter group, nn is the parameter number; for example, the address of Pr.04-10 is 040AH.

Mind if the block transfer parameters are read only. If the data is written to read-only parameters from the upper unit, a communication error may occur.

09-30 Communication Decoding Method

Default: 1

Settings 0: Decoding method 1 (20xx)
1: Decoding method 2 (60xx)

EtherCAT card only supports decoding method 2 (60xx).

Decoding Method		Method 1	Method 2
Source of Operation Control	Digital Keypad	Digital keypad controls the drive action regardless of decoding method 1 or 2.	
	External Terminal	External terminal controls the drive action regardless of decoding method 1 or 2.	
	RS-485	RS-485 controls the drive referring to index 2000h–20FFh	
	CANopen	Refer to index: 2020-01h–2020-FFh	Refer to index:2060-01h–2060-FFh
	Communication Card	Refer to address: 2000h–20FFh	Refer to address: 6000h–60FFh
	PLC	PLC command controls the drive action regardless of decoding method 1 or 2.	

NOTE: Refer to Section 15-4 CANopen Supported Index for the definition of 6000H.

09-33 PLC Command Force to 0

Default: 0

Setting 0–65535

Defines whether the Frequency command or the Speed command must be cleared to zero or not before the PLC starts the next scan.

bit	Description
bit 0	Before PLC scan, set the PLC target frequency = 0
bit 1	Before PLC scan, set the PLC target torque = 0
bit 2	Before PLC scan, set the speed limit of torque mode = 0

09-35 PLC Address

Default: 2

Settings 1–254

09-36 CANopen Slave Address

Default: 0

Settings 0: Disable
1–127

09-37 CANopen Speed

Default: 0

Settings 0: 1 Mbps
1: 500 Kbps
2: 250 Kbps
3: 125 Kbps
4: 100 Kbps (Delta only)
5: 50 Kbps

09-39 CANopen Warning Record

Default: 0

Settings bit 0: CANopen software disconnection 1 (CANopen Guarding Time-out)
bit 1: CANopen software disconnection 2 (CANopen Heartbeat Time-out)
bit 3: CANopen SDO time-out
bit 4: CANopen SDO buffer overflow
bit 5: CANopen hardware disconnection warning (CANopen Bus OFF)
bit 6: CANopen format error warning (Error protocol for CANopen)

09-40 CANopen Decoding Method

Default: 1

Settings 0: Use Delta-defined decoding method
1: Use CANopen Standard DS402 protocol

09-41 CANopen Communication Status

Default: Read only

Settings
0: Node Reset State
1: Com Reset State
2: Boot up State
3: Pre-operation State
4: Operation State
5: Stop State

09-42 CANopen Control Status

Default: Read only

Settings
0: Not ready for use state
1: Inhibit start state
2: Ready to switch on state
3: Switched on state
4: Enable operation state
7: Quick stop active state
13: Error reaction activation state
14: Error state

09-43 CANopen Reset Index

Default: 65535

Settings
bit 0: CANopen reset, the internal address 20XX is 0
bit 1: CANopen reset, the internal address 264X is 0
bit 2: CANopen reset, the internal address 26AX is 0
bit 3: CANopen reset, the internal address 60XX is 0

09-60 Communication Card Identification

Default: Read only

Settings
0: No communication card
1: DeviceNet Slave
2: PROFIBUS-DP Slave
3: CANopen Slave
5: EtherNet/IP Slave
6: EtherCAT
10: Backup Power Supply
12: PROFINET

09-61 Firmware Version of Communication Card

09-62 Product Code

09-63 Error code

Default: Read only

Settings Read only

09-70 Communication Card Address (for DeviceNet or PROFIBUS)

Default: 1

Settings DeviceNet: 0–63

PROFIBUS-DP: 1–125

09-71 Communication Card Speed Setting (for DeviceNet)

Default: 2

Settings Standard DeviceNet:

0: 125 Kbps

1: 250 Kbps

2: 500 Kbps

3: 1 Mbps (Delta Only)

Non-standard DeviceNet: (Delta only):

0: 10 Kbps

1: 20 Kbps

2: 50 Kbps

3: 100 Kbps

4: 125 Kbps

5: 250 Kbps

6: 500 Kbps

7: 800 Kbps

8: 1 Mbps

09-72 Additional Settings for Communication Card Speed (for DeviceNet)

Default: 0

Settings 0: Disable

In this mode, the baud rate can only be 125 Kbps, 250 Kbps, 500 Kbps, or 1 Mbps in standard DeviceNet speed.

1: Enable

In this mode, the DeviceNet baud rate can be same as that for CANopen (0–8).

- Use this parameter with Pr.09-71.
- 0: The baud rate can only be set to 125 Kbps, 250 Kbps and 500 Kbps (baud rate 0, 1, 2 and 3) as a standard DeviceNet speed.
- 1: The DeviceNet communication rate can be the same as that for CANopen (setting 0–8).

09-75 Communication Card IP Configuration (for EtherNet)

Default: 0

Settings 0: Static IP

1: Dynamic IP (DHCP)

- 0: Set the IP address manually.
- 1: IP address is dynamically set by the host controller.

09-76	Communication Card IP Address 1 (for EtherNet)
09-77	Communication Card IP Address 2 (for EtherNet)
09-78	Communication Card IP Address 3 (for EtherNet)
09-79	Communication Card IP Address 4 (for EtherNet)

Default: 0

Settings 0–255

Use Pr.09-76–Pr.09-79 with a communication card.

09-80	Communication Card Address Mask 1 (for EtherNet)
09-81	Communication Card Address Mask 2 (for EtherNet)
09-82	Communication Card Address Mask 3 (for EtherNet)
09-83	Communication Card Address Mask 4 (for EtherNet)

Default: 0

Settings 0–255

09-84	Communication Card Gateway Address 1 (for EtherNet)
09-85	Communication Card Gateway Address 2 (for EtherNet)
09-86	Communication Card Gateway Address 3 (for EtherNet)
09-87	Communication Card Gateway Address 4 (for EtherNet)

Default: 0

Settings 0–255

09-88	Communication Card Password (Low Word) (for EtherNet)
09-89	Communication Card Password (High Word) (for EtherNet)

Default: 0

Settings 0–99

09-90	Reset Communication Card (for EtherNet)

Default: 0

Settings 0: Disable
1: Reset to defaults

09-91	Additional Settings for the Communication Card (for EtherNet)

Default: 0

Settings bit 0: Enable IP filter
bit 1: Enable Internet parameters (1 bit)
When the IP address is set, this bit is enabled. After updating the parameters for the communication card, this bit changes to disabled.
bit 2: Enable login password (1 bit)
When you enter the login password, this bit is enabled. After updating the communication card parameters, this bit changes to disabled.

09-92 Communication Card Status (for EtherNet)

Default: 0

Settings bit 0: Enable password

When the communication card is set with a password, this bit is enabled. When the password is cleared, this bit is disabled.

10 Speed Feedback Control Parameters

In this parameter group, ASR is the abbreviation for Adjust Speed Regulator.

✓ You can set this parameter during operation.

10-00 MI7 Single-Phase Pulse Input Type Selection

Default: 0

Settings 0: Disabled
5: Pulse input (MI7)

- When you use MI7 single-phase pulse input, you must use it with Pr.00-20 = 4, Pr.10-00 = 5 and Pr.10-16 = 5.
- When you use MI7 single-phase pulse input as speed feedback, you must use it with Pr.10-00 = 5 and Pr.10-02 = 5. The drive calculates the MI7 single-phase pulse input speed when the control modes are VF, VFPG, SVC IM/PM FOC sensorless, and IM/PM TQC
- The MS300 does not support the full position control pulse command input function.

10-01 MI7 Single-Phase Pulse Input Pulses per Revolution

Default: 600

Settings 1–20000

- This parameter sets the MI7 single-phase pulse input pulses per revolution (ppr). It is a feedback control signal source when using pulses. The MI7 single-phase pulse input sets the number of pulses for the motor rotating through one rotation. The A/B phase cycle generates the pulse number.
- This setting is also the MI7 single-phase pulse input resolution. The speed control is more accurate with higher resolution.
- If you set this parameter incorrectly, it may cause motor stall, drive over-current, or a permanent magnetic pole origin detection error for the PM motor in closed-loop control. When using the PM motor, you must perform the magnetic pole origin detection (Pr.05-00 = 13) again if you modify the content of this parameter.

10-02 Encoder Input Type Setting

Default: 0

Settings 0: Disable
5: Single-phase input (MI7)

✓ 10-04 Mechanical Gear at Load Side A1
✓ 10-05 Mechanical Gear at Motor Side B1
✓ 10-06 Mechanical Gear at Load Side A2
✓ 10-07 Mechanical Gear at Motor Side B2

Default: 100

Settings 1–65535

- Use Pr.10-04–Pr.10-07 with the multi-function input terminal setting 48 to switch to Pr.10-04–Pr.10-05 or Pr.10-06–Pr.10-07, as shown in the diagram below.

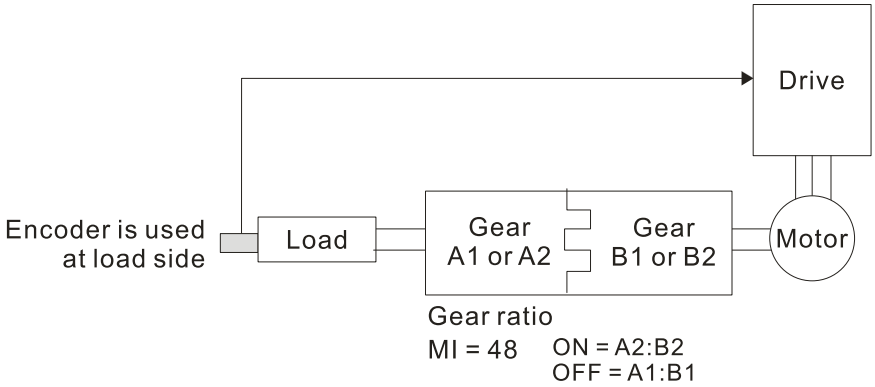

10-10 MI7 Single-Phase Pulse Input Stall Level

Default: 115

Settings 0–120% (0: Disable)

Determines the maximum MI7 single-phase pulse input feedback signal allowed before a fault occurs; the maximum operation frequency Pr.01-00 = 100%.

10-11 Detection Time of MI7 Single-Phase Pulse Input Stall

Default: 0.1

Settings 0.0–2.0 sec.

10-12 MI7 Single-Phase Pulse Input Stall Action

Default: 2

Settings 0: Warn and continue operation
1: Fault and ramp to stop
2: Fault and coast to stop

When the drive output frequency exceeds the MI7 single-phase pulse input stall level (Pr.10-10), the drive starts to count the time. When the error time exceeds the MI7 single-phase pulse input stall detection time (Pr.10-11), the drive implements the MI7 single-phase pulse input stall action (Pr.10-12).

10-13 MI7 Single-Phase Pulse Input Slip Range

Default: 50

Settings 0–50% (0: Disable)

10-14 Detection Time of MI7 Single-Phase Pulse Input Slip

Default: 0.5

Settings 0.0–10.0 sec.

10-15 MI7 Single-Phase Pulse Input Stall and Slip Error Action

Default: 2

Settings 0: Warn and continue operation
1: Fault and ramp to stop
2: Fault and coast to stop

When the value of (rotation speed – motor frequency) exceeds the Pr.10-13 setting, and the detection time exceeds Pr.10-14; the drive starts to count the time. If the detection time exceeds Pr.10-14, the encoder feedback signal error occurs.

10-16 Pulse Input Type Setting

Default: 0

Settings 0: Disabled

5: Single-phase input (MI7)

When Pr.10-16 = 5, you cannot set Pr.10-02 to 5: Single-phase input (MI7) for closed-loop control.

The setting steps when using the MI7 single-phase pulse input as the frequency command:

1. Set Pr.00-20 = 4: Pulse input without direction command
2. Set Pr.10-00 = 5: Pulse input (MI7)
3. Set Pr.10-01 to motor pulses per revolution (ppr)
4. Set Pr.10-16 = 5: Single-phase input (MI7)
5. Set Pr.00-04 = 22 (Pulse input frequency) to verify if the pulse input frequency is correct.

10-17 Electrical Gear A

10-18 Electrical Gear B

Default: 100

Settings 1–65535

Rotation speed = pulse frequency ÷ MI7 single-phase pulse input pulses (Pr.10-01) × electrical gear A / electrical gear B.

10-21 Pulse Input Speed Command Low Pass Filter Time

Default: 0.100

Settings 0.000–65.535 sec.

When you set Pr.00-20 to 4, the system treats the pulse command as a Frequency command. Use this parameter to suppress the speed command jump.

10-24 FOC & TQC Function Control

Default: 0

Settings 0–65535

bit	Description
0	ASR controller under torque control
1~10	N/A
12	FOC sensorless mode with crossing zero means the speed goes from negative to positive or positive to negative (forward to reverse direction or reverse to forward direction). 0: determined by the stator frequency; 1: determined by the speed command
15	Direction control in open-loop torque 0: Switch ON direction control; 1: Switch OFF direction control

Only bit = 0 is used for closed-loop; other bits are used for open-loop.

10-25 FOC Bandwidth for Speed Observer

Default: 40.0

Settings 20.0–100.0 Hz

Setting the speed observer to a higher bandwidth could shorten the speed response time but creates greater noise interference during the speed observation.

10-26 FOC Minimum Stator Frequency

Default: 2.0

Settings 0.0–10.0% fN

Sets the stator frequency lower limit in operation status. This setting ensures the stability and accuracy of observer and avoids interferences from voltage, current and motor parameters. fN is the motor rated frequency.

10-27 FOC Low Pass Filter Time Constant

Default: 50

Settings 1–1000 ms

Sets the low pass filter time constant of a flux observer at start-up. If you cannot activate the motor during high speed operation, lower the setting for this parameter.

10-28 FOC Gain for Excitation Current Rise Time

Default: 100

Settings 33–100% Tr

Sets the drive's excitation current rise time when it activates in open-loop torque mode. When the drive's activation time is too long in torque mode, adjust this parameter to a shorter time value. Tr is the rotor time constant.

10-29 Upper Limit of Frequency Deviation

Default: 20.00

Settings 0.00–200.00 Hz

Limits the maximum frequency deviation.

If you set this parameter too high, an abnormal feedback malfunction occurs.

If the application needs a higher setting for Pr.10-29, when the MI7 terminal receives pulse signals that results in larger motor slip, it may causes a PG Error (PGF3, PGF4) easily. In this case, you can set Pr.10-10 and Pr.10-13 to 0 to disable PGF3 and PGF4 detection, but you must make sure the MI7 wiring and application are correct; otherwise, it may lose the instant PG protection. Setting Pr.10-29 too high is not commonly done.

10-31 I/F Mode, Current Command

Default: 40

Settings 0–150% rated current of the motor

Sets the current command for the drive in the low speed area (low speed area: Frequency command < Pr.10-39). When the motor stalls on heavy duty start-up or forward/reverse with load, increase the parameter value. If the inrush current is too high and causes oc stall, then decrease the parameter value.

10-32 PM FOC Sensorless Speed Estimator Bandwidth

Default: 5.00

Settings 0.00–600.00 Hz

- Sets the speed estimator bandwidth. Adjust the parameter to influence the stability and the accuracy of the motor speed.
- If there is low frequency vibration (the waveform is similar to a sine wave) during the process, then increase the bandwidth. If there is high frequency vibration (the waveform shows extreme vibration and is like a spur), then decrease the bandwidth.

10-34 PM Sensorless Speed Estimator Low-pass Filter Gain

Default: 1.00

Settings 0.00–655.35

- Influences the response speed of the speed estimator.
- If there is low frequency vibration (the waveform is similar to a sine wave) during the process, then increase the gain. If there is high frequency vibration (the waveform shows extreme vibration and is like a spur), then decrease the gain.

10-35 AMR (Kp) Gain

Default: 1.00

Settings 0.00–3.00

10-36 AMR (Ki) Gain

Default: 0.20

Settings 0.00–3.00

10-39 Frequency Point to Switch from I/F Mode to PM Sensorless Mode

Default: 20.00

Settings 0.00–599.00 Hz

- Sets the frequency for the switch point from low frequency to high frequency.
- Due to the weak back-EMF in the low frequency area, PM sensorless mode cannot estimate the accurate speed and position of the rotor. Thus, using I/F mode control is more suitable. In the medium-to-high frequency area, PM sensorless can accurately estimate the back-EMF, stabilizes and controls the motor with lower current.
- If the switch point is too low and PM sensorless mode operates at a too low frequency, the motor does not generate enough back-EMF to let the speed estimator measure the right position and speed of the rotor, and causes stall and oc when running at the switch point frequency.
- If the switch point is too high, the drive easily runs in the frequency area of the I/F mode for a long time, which generates a larger current and cannot save energy. (If the current for Pr.10-31 is too high, the high switch point makes the drive continue to output with the setting value for Pr.10-31.)

10-42 Initial Angle Detection Pulse Value

Default: 1.0

Settings 0.0–3.0

- The angle detection is fixed to 3: Use the pulse injection method to start. The parameter influences the value of the pulse during the angle detection. The larger the pulse, the higher the accuracy of rotor's position. A larger pulse might cause oc.
- Increase the parameter when the running direction and the command are opposite during start-up. If oc occurs at start-up, then decrease the parameter.
- Refer to Section 12-2 Adjustment & Application for detailed motor adjustment procedure.

10-49 Zero Voltage Time during Start-up

Default: 0.000

Settings 0.000–60.000 sec.

- This parameter is valid only when the setting of Pr.07-12 (Speed Tracking during Start-up) = 0.
- When the motor is in static state at start-up, this increases the accuracy when estimating angles. In order to put the motor in static state, set the three-phase of the drive output to the motor to 0 V. The Pr.10-49 setting time is the length of time for three-phase output at 0 V.
- It is possible that even when you apply this parameter, the motor cannot go in to the static state because of inertia or some external force. If the motor does not go into a complete static state in 0.2 seconds, increase this setting value appropriately.
- If Pr.10-49 is set too high, the start-up time is longer. If it is too low, then the braking performance is weak.

10-51 Injection Frequency

Default: 500

Settings 0–1200 Hz

- This parameter is a high frequency injection command in PM SVC control mode, and usually you do not need to adjust it. But if a motor's rated frequency (for example, 400 Hz) is too close to the frequency setting for this parameter (that is, the default of 500 Hz), it affects the accuracy of the angle detection. Refer to the setting for Pr.01-01 before you adjust this parameter.
- If the setting value for Pr.00-17 is lower than Pr.10-51 × 10, then increase the frequency of the carrier frequency.
- Pr.10-51 is valid only when Pr.10-53 = 2.

10-52 Injection Magnitude

Default: 15.0 / 30.0 / 37.5

Settings 115V / 230V models: 100.0 V
460V models: 200.0 V
575V models: 200.0 V
NOTE: The setting range varies depending on the voltage.

- The parameter is the magnitude command for the high frequency injection signal in PM SVC control mode.
- Increasing the parameter can increase the accuracy of the angle estimation, but the electromagnetic noise might be louder if the setting value is too high.
- The system uses this parameter when the motor's parameter is "Auto". This parameter influences the angle estimation accuracy.

- When the ratio of the salient pole (Lq / Ld) is lower, increase Pr.10-52 to make the angle detection accurate.
- Pr.10-52 is valid only when Pr.10-53 = 2.

10-53 Angle Detection Method

Default: 0

Settings	0: Disabled
	1: Force attracting the rotor to zero degrees
	2: High frequency injection
	3: Pulse injection

- Set to 2 for IPM; set to 3 for SPM. If these settings cause problems, then set the parameter to 1.

[This page intentionally left blank]

11 Advanced Parameters

In this parameter group, ASR stands for Adjust Speed Regulator.

You can set this parameter during operation.

11-00 System Control

Default: 0

Settings bit 0: Auto-tuning for ASR and APR
bit 3: Dead time compensation closed
bit 7: Save or do not save the frequency

bit 0 = 0: Pr.11-06–Pr.11-11 are valid and Pr.11-03–Pr.11-05 are invalid.
bit 7 = 0: Save the frequency before power is OFF. When power is ON again, the saved frequency is displayed.
bit 7 = 1: Do not save the frequency before power is OFF. When power is ON again, 0.00 Hz is the displayed frequency.

11-01 Per-Unit of System Inertia

Default: 256

Settings 1–65535 (256 = 1 PU)

To get the system inertia per unit from Pr.11-01, you need to set Pr.11-00 to bit1 = 1 and execute continuous forward / reverse running.

When Pr.11-01 = 256, it is 1 PU. According to the table below, if you use a 2 HP motor, the 2 HP motor inertia is 0.00043 kg-cm^2. If Pr.11-01 = 10000 after tuning, the system inertia is (10000 ÷ 256) × 0.00043 kg-cm^2.

Perform the operation test with load based on the inertia after tuning. Run the motor in acceleration, deceleration, and steady speed and observe the values. If values between speed feedback and speed command are close, steady-state error is small and overshoot is less, then this inertia is a better one.

If the Iq current command from ASR has high-frequency glitch, then decrease the setting. If the response time of sudden loading is too slow, then increase the setting.

When using torque mode as the control mode, perform the tuning with speed mode first to see if the tuned inertia can work normally. After verifying with speed mode, change the control mode to torque mode.

The following table shows the base value for the induction motor system inertia (Unit: kg-m^2)

Power	Setting	Power	Setting
1 HP	0.00023	10 HP	0.00358
2 HP	0.00043	15 HP	0.00743
3 HP	0.00083	20 HP	0.00953
5 HP	0.00148	25 HP	0.01428
7.5 HP	0.0026	30 HP	0.01765

11-02 ASR1 / ASR2 Switch Frequency

Default: 7.00

Settings 5.00–599.00 Hz

Sets the low-speed and high-speed ASR switching point in the FOC area. Provides flexibility to

meet two needs: in the high-speed region of the estimator switch point it has a high response, and in the low-speed region of the estimator switch point it has a lower response. The recommended switching point is higher than Pr.10-39.

📖 A low setting does not cover Pr.10-39. If the setting is too high, high-speed range is too narrow.

11-03 ASR1 Low-speed Bandwidth

Default: Read only

Settings 1–40 Hz

11-04 ASR2 High-speed Bandwidth

Default: Read only

Settings 1–40 Hz

11-05 Zero-speed Bandwidth

Default: Read only

Settings 1–40 Hz

📖 After estimating the inertia and setting Pr.11-00 bit 0 = 1 (auto-tuning), you can adjust Pr.11-03, 11-04 and 11-05 separately by speed response. The larger the setting value, the faster the response. Pr.11-02 is the switch frequency between the low-speed/high-speed bandwidth.

11-06 ASR 1 Gain

Default: 10

Settings 0–40 Hz

11-07 ASR 1 Integral Time

Default: 0.100

Settings 0.000–10.000 sec.

11-08 ASR2 Gain

Default: 10

Settings 0–40 Hz

11-09 ASR2 Integral Time

Default: 0.100

Settings 0.000–10.000 sec.

11-10 ASR Gain of Zero Speed

Default: 10

Settings 0–40 Hz

11-11 ASR Integral Time of Zero Speed

Default: 0.100

Settings 0.000–10.000 sec.

11-12 Gain for ASR Speed Feed Forward

Default: 0

Settings 0–200%

📖 This function enables when Pr.11-00 bit 0 = 1.

📖 Increase the setting for Pr.11-12 to reduce the command tracking difference and improve the speed response. Use this function for speed tracking applications.

Set Pr.11-01 correctly to get excellent improvement of the speed response.

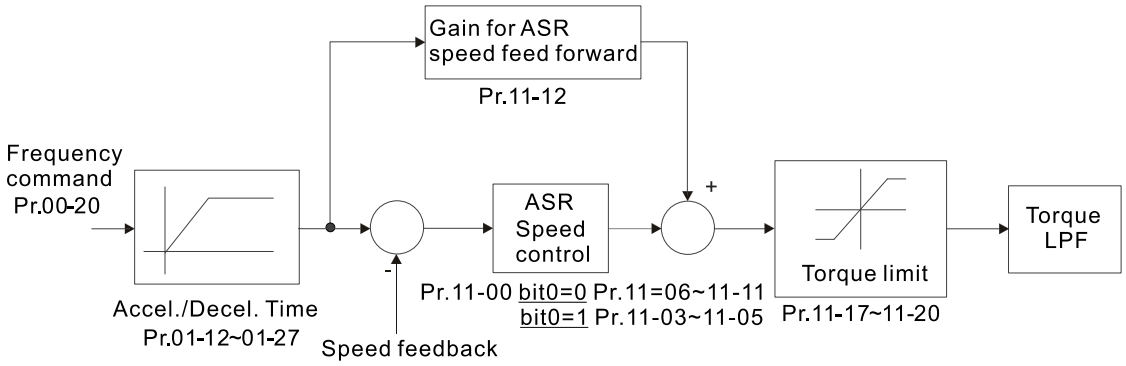

11-13 PDFF Gain Value

Default: 30

Settings 0–200%

This parameter is invalid when Pr.05-24 = 1.

This parameter is valid only when Pr.11-00 bit0 = 1.

After you estimate and set Pr.11-00 bit0 = 1 (auto-tuning), use Pr.11-13 to reduce overshoot. However, a shift of the curve may occur earlier. In this case, you can set Pr.11-13 = 0 first, and then increase the setting value to "a condition with best acceleration and without overshoot" when the acceleration time meets your application but overshoot occurs.

Increasing Pr.11-13 improves the overshoot of speed tracking, but an excessive value may reduce the transient response.

Increasing Pr.11-13 enhances the system stiffness in high-speed steady state and reduces the speed transient fluctuation at a sudden loading.

Ensure that you set the Pr.11-01 system inertia correctly to get excellent improvement of the speed response.

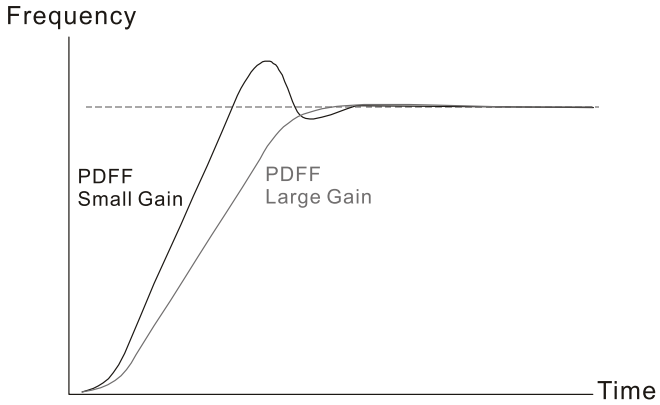

11-14 ASR Output Low Pass Filter Time

Default: 0.008

Settings 0.000–0.350 sec.

Sets the ASR command filter time.

11-15 Notch Filter Depth

Default: 0

Settings 0–20 dB

11-16 Notch Filter Frequency

Default: 0.00

Settings 0.00–200.00 Hz

- Sets the resonance frequency of the mechanical system. Adjust it to a smaller value to suppress the mechanical system resonance.
- A larger value improves resonance suppression function.
- The notch filter frequency is the mechanical frequency resonance.

11-17 Forward Motor Torque Limit
11-18 Forward Regenerative Torque Limit
11-19 Reverse Motor Torque Limit
11-20 Reverse Regenerative Torque Limit

Default: 500

Settings 0–500%

- FOCPG and FOC Sensorless mode:
- The motor rated current = 100%. The settings for Pr.11-17–Pr.11-20 compare with the Pr.03-00 = 7, 8, 9, 10. The minimum value of the comparison result is the torque limit. The diagram below illustrates the torque limit.
- TQCPG and TQC sensorless mode:
- The function of Pr.11-17–11-20 is the same as FOC; however, in this case, the torque limit and the torque command executes the output torque limit at the same time. Therefore, the minimum value between Pr.11-17–11-20 and Pr.06-12 becomes the current output torque limit.
- Refer to Pr.11-34 for calculation equation for the motor rated torque.

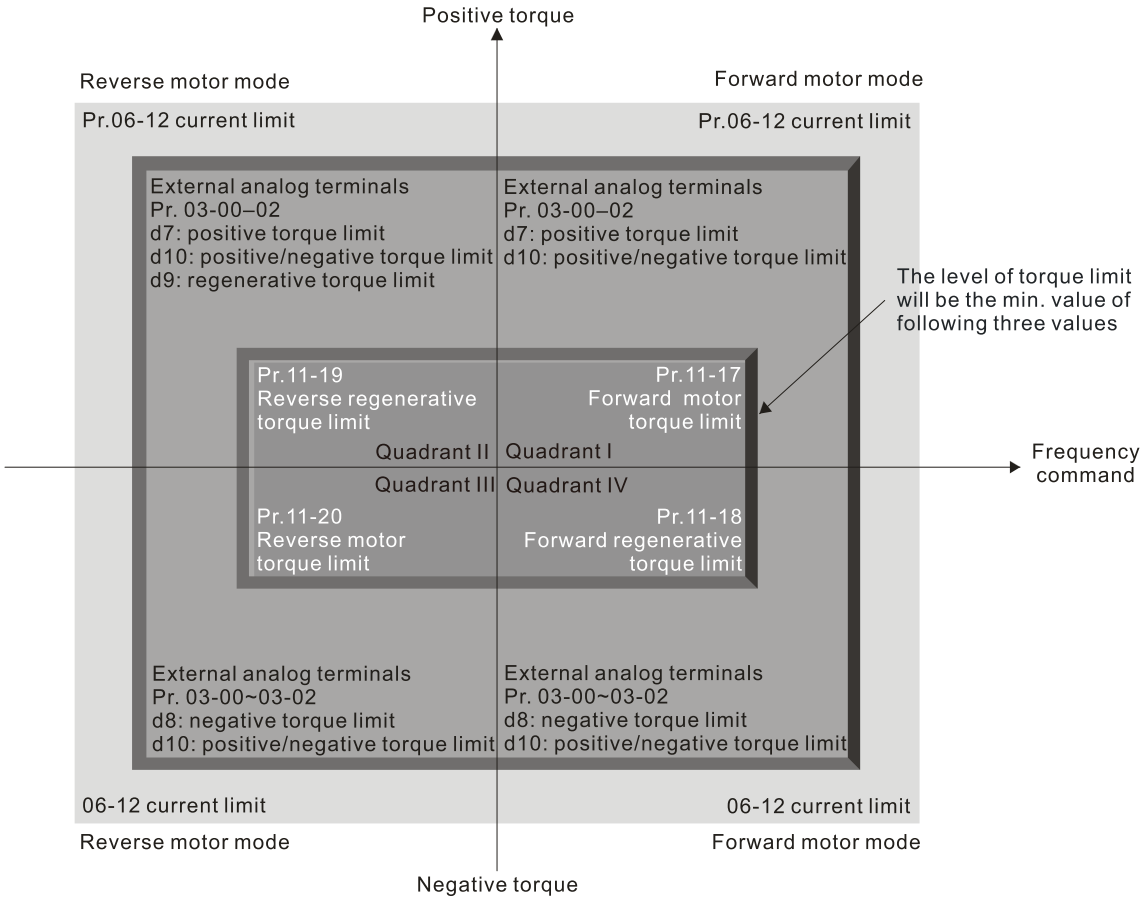

All control modes are based on 100% of the motor rated current except:
IM: VF, VFPG, SVC
PM: PMSVC

11-21 Flux Weakening Curve for Motor 1 Gain Value

Default: 90

Settings 0–200%

11-22 Flux Weakening Curve for Motor 2 Gain Value

Default: 90

Settings 0–200%

Adjusts the output voltage for the flux weakening curve.

For the spindle application, use this adjustment method:

1. Run the motor to the highest frequency.
2. Observe the output voltage.
3. Adjust the Pr.11-21 (motor 1) or Pr.11-22 (motor 2) setting to make the output voltage reach the motor rated voltage.
4. The larger the setting value, the greater the output voltage.

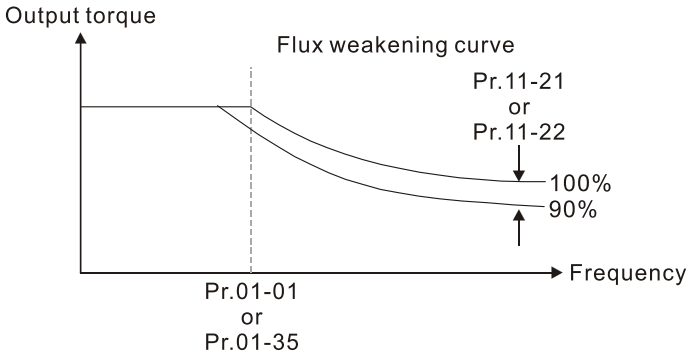

11-23 Flux Weakening Area Speed Response

Default: 65

Settings 0–150%

Controls the speed in the flux weakening area. The larger the value, the faster the acceleration/deceleration. In normal condition, you do not need to adjust this parameter.

11-27 Maximum Torque Command

Default: 100

Settings 0–500%

Determines the upper limit of the torque command (motor rated torque is 100%).

Refer to Pr.11-34 for calculation equation for the motor rated torque.

11-28 Torque Offset Source

Default: 0

Settings 0: Disable
1: Analog signal input
2: RS-485 communication (Pr.11-29)
3: Controlled through external terminals (by Pr.11-30–Pr.11-32)

- Specifies the torque offset source.
- When set to 3, the torque offset sources are Pr.11-30, Pr.11-31 or Pr.11-32 according to the multi-function input terminal settings 31, 32 or 33.

  Normally open (N.O.) contact: ON = contact closed, OFF = contact open

Pr.11-32	Pr.11-31	Pr.11-30	Torque Offset
MI = 33 (Low)	MI = 32 (Mid)	MI = 31 (High)	
OFF	OFF	OFF	None
OFF	OFF	ON	Pr.11-30
OFF	ON	OFF	Pr.11-31
OFF	ON	ON	Pr.11-30 + Pr.11-31
ON	OFF	OFF	Pr.11-32
ON	OFF	ON	Pr.11-30 + Pr.11-32
ON	ON	OFF	Pr.11-31 + Pr.11-32
ON	ON	ON	Pr.11-30 + Pr.11-31 + Pr.11-32

11-29 Torque Offset Setting

Default: 0.0

Settings -100.0–100.0%

- Determines the torque offset command. The motor rated torque is 100%.
- Refer to Pr.11-34 for calculation equation for the motor rated torque.

11-30 High Torque Offset

Default: 30.0

Settings -100.0–100.0%

11-31 Middle Torque Offset

Default: 20.0

Settings -100.0–100.0%

11-32 Low Torque Offset

Default: 10.0

Settings -100.0–100.0%

- When Pr.11-28 is set to 3, the torque offset sources are Pr.11-30, Pr.11-31 or Pr.11-32 according to the multi-function input terminals settings 31, 32 or 33. The motor rated torque is 100%.
- Refer to Pr.11-34 for calculation equation for the motor rated torque.

11-33 Torque Command Source

Default: 0

Settings 0: Digital keypad
1: RS-485 communication (Pr.11-34)
2: Analog signal input (Pr.03-00)
3: CANopen
5: Communication Card

- When Pr.11-33 is set to 0 or 1, you can set the torque command in Pr.11-34.
- When Pr.11-33 is set to 2, 3 or 5, Pr.11-34 only displays the torque command.

11-34 Torque Command

Default: 0.0

Settings -100.0–100.0%

- This parameter sets the torque command. When Pr.11-27 is 250% and Pr.11-34 is 100%, the actual torque command = 250 × 100% = 250% of the motor rated torque.
- The drive saves the settings before power is OFF.
- The calculation equation for the motor rated torque:

  Motor rated torque: $T(N.M) = \dfrac{P(W)}{\omega(rad/s)}$;

  P (W) value = Pr.05-02 (Pr.05-14); ω (rad / s) value = Pr.05-03 (Pr.05-15) $\dfrac{RPM \times 2\pi}{60} = rad/s$

11-35 Torque Command Filter Time

Default: 0.000

Settings 0.000–1.000 sec.

- When the setting is too long, the control is stable but the control response is delayed. When the setting is too short, the response is quick but the control may be unstable. Adjust the setting according to your control and response situation.

11-36 Speed Limit Selection

Default: 0

Settings
0: Set by Pr.11-37 (Forward Speed Limit) and Pr.11-38 (Reverse Speed Limit)
1: Set by Pr.00-20 (Master Frequency Command (AUTO, REMOTE) Source) and Pr.11-37, Pr.11-38
2: Set by Pr.00-20 (Master Frequency Command (AUTO, REMOTE) Source)

- Speed limit function: when you use the torque control mode, if the torque command is greater than the load, the motor accelerates until the motor speed equals the speed limit. At this time, it switches to speed control mode to stop acceleration.
- Pr.11-36 = 1:
  - When the torque command is positive, the forward speed limit is Pr.00-20 and the reverse speed limit is Pr.11-38. When the torque command is negative, the forward speed limit is Pr.11-37 and the reverse speed limit is Pr.00-20.
  - Example:
    In an unwinding application, if the torque command direction is different from the motor operating direction, the load drives the motor. In this case, the speed limit must be Pr.11-37 or Pr.11-38. Only in normal applications, that is when the motor drives the load and the torque command is in the same direction as the speed limit, you can set the speed limit according to Pr.00-20.
- In torque control mode, the F page of keypad displays the present speed limit value. For details on the keypad display, refer to the LED Function Description in Section 7-14 Digital Keypad (optional).

Pr.11-36=0

Forward/reverse running speed are limited by Pr.11-37 and Pr.11-38

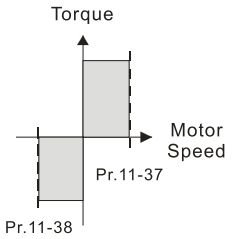

Pr.11-36=2

Forward/reverse running speed are limited by Pr.00-20

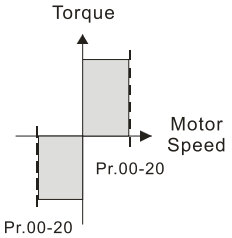

Pr.11-36=1

When torque is positive, forward running speed is limited by Pr.00-20; reverse running speed is limited by Pr.11-38

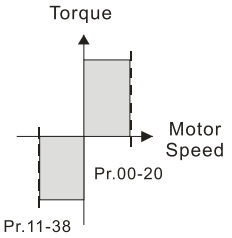

Pr.11-36=1

When torque is negative, forward running speed is limited by Pr.11-37; reverse running speed is limited by Pr.00-20

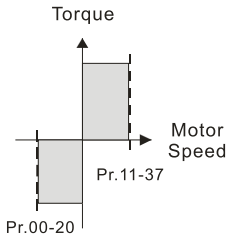

11-37 Forward Speed Limit (Torque Mode)

Default: 10

Settings 0–120%

11-38 Reverse Speed Limit (Torque Mode)

Default: 10

Settings 0–120%

Limits the speed for forward and reverse running in torque mode (Pr.01-00 Maximum Operation Frequency = 100%).

11-41 PWM Mode Selection

Default: 2

Settings 0: Two-phase modulation mode
2: Space vector modulation mode

Two-phase modulation mode: effectively reduces the drive power component losses and provides better performance in long wiring applications.

Space vector modulation mode: effectively reduces the power loss and electromagnetic noise of the motor.

11-42 System Control Flag

Default: 0000

Settings 0000–FFFFh

bit No.	Function	Description
0	Reserved	
1	FWD / REV action control	0: FWD / REV cannot be controlled by Pr.02-12 bit 0 & 1. 1: FWD / REV can be controlled by Pr.02-12 bit 0 & 1.

13 Industry Application Parameters

✓ You can set this parameter during operation.

13-00 Industry-Specific Parameter Application

Default: 00

Settings
00: Disabled
01: User-defined parameter
02: Compressor
03: Fan
04: Pump
05: Conveyor
06: Machine tool
07: Packing
08: Textiles
10: Logistics
11: Tension PID
12: Tension PID + master / auxiliary frequency

NOTE: after you select the macro, some of the default values adjust automatically according to the application selection.

Setting 02: Compressor

The following table lists the relevant compressor setting application parameters.

Pr.	Parameter Name	Settings
00-11	Speed control mode	0 (IMVF control mode)
00-16	Load selection	0 (Normal load)
00-17	Carrier frequency	Default setting
00-20	Master frequency command source (AUTO, REMOTE)	2 (External analog input)
00-21	Operation command source (AUTO, REMOTE)	1 (External terminals)
00-22	Stop method	0 (Ramp to stop)
00-23	Motor direction control	1 (Disable reverse)
01-00	Motor 1 maximum operation frequency	Default setting
01-01	Rated / base frequency of motor 1	Default setting
01-02	Rated / base voltage of motor 1	Default setting
01-03	Mid-point frequency 1 of motor 1	Default setting
01-04	Mid-point voltage 1 of motor 1	Default setting
01-05	Mid-point frequency 2 of motor 1	Default setting
01-06	Mid-point voltage 2 of motor 1	Default setting
01-07	Minimum output frequency of motor 1	Default setting
01-08	Minimum output voltage of motor 1	Default setting
01-11	Output frequency lower limit	20 (Hz)

Pr.	Parameter Name	Settings
01-12	Acceleration time 1	20 (sec.)
01-13	Deceleration time 1	20 (sec.)
03-00	Analog input selection (AVI)	0 (No function)
03-01	Analog input selection (ACI)	1 (Frequency command)
05-01	Full-load current for induction motor 1 (A)	Default setting
05-03	Rated speed for induction motor 1 (rpm)	Default setting
05-04	Number of poles for induction motor 1	Default setting

Setting 03: Fan

The following table lists the relevant fan setting application parameters.

Pr.	Parameter Name	Settings
00-11	Speed control mode	0 (IMVF)
00-16	Load selection	0 (Normal load)
00-17	Carrier frequency	Default setting
00-20	Master frequency command source (AUTO, REMOTE)	2 (External analog input)
00-21	Operation command source (AUTO, REMOTE)	1 (External terminals)
00-22	Stop method	1 (Coast to stop)
00-23	Motor direction control	1 (Disable reverse)
00-30	Master frequency command source (HAND, LOCAL)	0 (Digital keypad)
00-31	Operation command source (HAND, LOCAL)	0 (Digital keypad)
01-00	Motor 1 maximum operation frequency	Default setting
01-01	Rated / base frequency of motor 1	Default setting
01-02	Rated / base voltage of motor 1	Default setting
01-03	Mid-point frequency 1 of motor 1	Default setting
01-04	Mid-point voltage 1 of motor 1	Default setting
01-05	Mid-point frequency 2 of motor 1	Default setting
01-06	Mid-point voltage 2 of motor 1	Default setting
01-07	Minimum output frequency of motor 1	Default setting
01-08	Minimum output voltage of motor 1	Default setting
01-10	Output frequency upper limit	50 (Hz)
01-11	Output frequency lower limit	35 (Hz)
01-12	Acceleration time 1	15 (sec.)
01-13	Deceleration time 1	15 (sec.)
01-43	V/F curve selection	2 (V/F curve to the power of 2)
02-05	Multi-function input command 5 (MI5)	16 (Rotating speed command from ACI)
02-16	Multi-function output 2 (MO1)	11 (Malfunction indication)

Pr.	Parameter Name	Settings
02-17	Multi-function output 3 (MO2)	1 (Indication during RUN)
03-00	Analog input selection (AVI)	1 (Frequency command)
03-01	Analog input selection (ACI)	1 (Frequency command)
03-28	AVI terminal input selection	0 (0–10 V)
03-29	ACI terminal input selection	1 (0–10 V)
03-31	AFM output selection	0 (0–10 V)
03-50	Analog input curve selection	1 (three-point curve of AVI)
07-06	Restart after momentary power loss	2 (Speed tracking by the minimum output frequency)
07-11	Number of times of restart after fault	5 (times)
07-33	Auto-restart interval of fault	60 (sec.)

Setting 04: Pump

The following table lists the relevant pump setting application parameters.

Pr.	Parameter Name	Settings
00-11	Speed control mode	0 (IMVF)
00-16	Load selection	0 (Normal load)
00-20	Master frequency command source (AUTO, REMOTE)	2 (External analog input)
00-21	Operation command source (AUTO, REMOTE)	1 (External terminals)
00-23	Motor direction control	1 (Disable reverse)
01-00	Motor 1 maximum operation frequency	Default setting
01-01	Rated / base frequency of motor 1	Default setting
01-02	Rated / base voltage of motor 1	Default setting
01-03	Mid-point frequency 1 of motor 1	Default setting
01-04	Mid-point voltage 1 of motor 1	Default setting
01-05	Mid-point frequency 2 of motor 1	Default setting
01-06	Mid-point voltage 2 of motor 1	Default setting
01-07	Minimum output frequency of motor 1	Default setting
01-08	Minimum output voltage of motor 1	Default setting
01-10	Output frequency upper limit	50 (Hz)
01-11	Output frequency lower limit	35 (Hz)
01-12	Acceleration time 1	15 (sec.)
01-13	Deceleration time 1	15 (sec.)
01-43	V/F curve selection	2 (V/F curve to the power of 2)
07-06	Restart after momentary power loss	2 (Speed tracking by the minimum output frequency)
07-11	Number of times of restart after fault	5 (times)
07-33	Auto-restart interval of fault	60 (sec.)

Setting 05: Conveyor

The following table lists the relevant conveyor setting application parameters.

Pr.	Parameter Name	Settings
00-11	Speed control mode	0 (IMVF)
00-16	Load selection	0 (Normal load)
00-20	Master frequency command source (AUTO, REMOTE)	2 (External analog input)
00-21	Operation command source (AUTO, REMOTE)	1 (External terminals)
01-00	Motor 1 maximum operation frequency	Default setting
01-01	Rated / base frequency of motor 1	Default setting
01-02	Rated / base voltage of motor 1	Default setting
01-03	Mid-point frequency 1 of motor 1	Default setting
01-04	Mid-point voltage 1 of motor 1	Default setting
01-05	Mid-point frequency 2 of motor 1	Default setting
01-06	Mid-point voltage 2 of motor 1	Default setting
01-07	Minimum output frequency of motor 1	Default setting
01-08	Minimum output voltage of motor 1	Default setting
01-12	Acceleration time 1	10 (sec.)
01-13	Deceleration time 1	10 (sec.)

Setting 06: Machine tool

The following table lists the relevant machine tool setting application parameters.

Pr.	Parameter Name	Settings
00-11	Speed control mode	0 (IMVF)
00-17	Carrier frequency	Default setting
00-20	Master frequency command source (AUTO, REMOTE)	2 (External analog input)
00-21	Operation command source (AUTO, REMOTE)	1 (External terminals)
01-00	Motor 1 maximum operation frequency	Default setting
01-01	Rated / base frequency of motor 1	Default setting
01-02	Rated / base voltage of motor 1	Default setting
01-03	Mid-point frequency 1 of motor 1	0
01-04	Mid-point voltage 1 of motor 1	0
01-05	Mid-point frequency 2 of motor 1	0
01-06	Mid-point voltage 2 of motor 1	0
01-07	Minimum output frequency of motor 1	Default setting
01-08	Minimum output voltage of motor 1	Default setting
01-12	Acceleration time 1	5 (sec.)
01-13	Deceleration time 1	5 (sec.)

Pr.	Parameter Name	Settings
01-24	S-curve for acceleration begin time 1	0
01-25	S-curve for acceleration arrival time 2	0
01-26	S-curve for deceleration begin time 1	0
01-27	S-curve for deceleration arrival time 2	0
02-03	Multi-function input command 3 (MI3)	1 (Multi-step speed command 1)
02-04	Multi-function input command 4 (MI4)	2 (Multi-step speed command 2)
02-13	Multi-function output 1 (RY1)	11 (Malfunction indication)
02-16	Multi-function output 2 (MO1)	1 (Indication during RUN)
02-17	Multi-function output 3 (MO2)	2 (Operation speed reached)
03-00	Analog input selection (AVI)	1 (Frequency command)
06-01	Over-voltage stall prevention	0 (Disabled)
06-03	Over-current stall prevention during acceleration	0 (Disabled)
06-04	Over-current stall prevention during operation	0 (Disabled)
06-05	Acceleration / deceleration time selection for stall prevention at constant speed	0 (By current acceleration / deceleration time)
07-01	DC brake current level	20 (%)
07-03	DC brake time at STOP	0.3 (sec.)
07-04	DC brake frequency at STOP	0 (Hz)
07-23	Automatic voltage regulation (AVR) function	1 (Disable AVR)

Setting 07: Packing

The following table lists the relevant packing setting application parameters.

Pr.	Parameter Name	Settings
00-11	Speed control mode	0 (IMVF)
00-20	Master frequency command source (AUTO, REMOTE)	0 (Digital keypad)
00-21	Operation command source (AUTO, REMOTE)	2 (RS-485 communication input)
02-00	Two-wire / three-wire operation control	1 (two-wire mode 1, power on for operation control (M1: FWD / STOP, M2: REV / STOP))
01-00	Motor 1 maximum operation frequency	Default setting
01-01	Rated / base frequency of motor 1	Default setting
01-02	Rated / base voltage of motor 1	Default setting
01-03	Mid-point frequency 1 of motor 1	Default setting
01-04	Mid-point voltage 1 of motor 1	Default setting
01-05	Mid-point frequency 2 of motor 1	Default setting
01-06	Mid-point voltage 2 of motor 1	Default setting

Pr.	Parameter Name	Settings
01-07	Minimum output frequency of motor 1	Default setting
01-08	Minimum output voltage of motor 1	Default setting
01-12	Acceleration time 1	10 (sec.)
01-13	Deceleration time 1	10 (sec.)
01-24	S-curve for acceleration begin time 1	Default setting
01-25	S-curve for acceleration arrival time 2	Default setting
01-26	S-curve for deceleration begin time 1	Default setting
01-27	S-curve for deceleration arrival time 2	Default setting
03-00	Analog input selection (AVI)	1 (Frequency command)
03-28	AVI terminal input selection	Default setting

Setting 08: Textiles

The following table lists the relevant textile setting application parameters.

Pr.	Parameter Name	Settings
00-11	Speed control mode	0 (IMVF)
00-20	Master frequency command source (AUTO, REMOTE)	1 (RS-485 communication input)
00-21	Operation command source (AUTO, REMOTE)	1 (External terminals)
01-00	Motor 1 maximum operation frequency	Default setting
01-01	Rated / base frequency of motor 1	Default setting
01-02	Rated / base voltage of motor 1	Default setting
01-03	Mid-point frequency 1 of motor 1	Default setting
01-04	Mid-point voltage 1 of motor 1	Default setting
01-05	Mid-point frequency 2 of motor 1	Default setting
01-06	Mid-point voltage 2 of motor 1	Default setting
01-07	Minimum output frequency of motor 1	Default setting
01-08	Minimum output voltage of motor 1	Default setting
01-12	Acceleration time 1	10 (sec.)
01-13	Deceleration time 1	10 (sec.)
01-24	S-curve for acceleration begin time 1	0.2 (sec.)
01-25	S-curve for acceleration arrival time 2	0.2 (sec.)
01-26	S-curve for deceleration begin time 1	0.2 (sec.)
01-27	S-curve for deceleration arrival time 2	0.2 (sec.)
06-03	Over-current stall prevention during acceleration	180 (%)
06-04	Over-current stall prevention during operation	180 (%)
06-07	Over-torque detection level (motor 1)	200 (%)

Pr.	Parameter Name	Settings
07-19	Fan cooling control	2 (Fan is ON when the AC motor drive runs; fan is OFF when the AC motor drive stops)

Setting 10: Logistics

The following table lists the relevant logistics setting application parameters.

Pr.	Parameter Name	Settings
00-20	Master frequency command source (AUTO, REMOTE)	7 (Digital keypad potentiometer knob)
00-21	Operation command source (AUTO, REMOTE)	1 (External terminals)
01-00	Motor 1 maximum operation frequency	Default setting
01-01	Rated / base frequency of motor 1	Default setting
01-02	Rated / base voltage of motor 1	400.0
01-04	Mid-point voltage 1 of motor 1	20.0
01-06	Mid-point voltage 2 of motor 1	20.0
01-08	Minimum output voltage of motor 1	20.0
01-03	Mid-point frequency 1 of motor 1	1.50
01-07	Minimum output frequency of motor 1	1.50
01-12	Acceleration time 1	3 (sec.)
01-13	Deceleration time 1	3 (sec.)
01-24	S-curve for acceleration begin time 1	0.00
01-25	S-curve for acceleration arrival time 2	0.00
01-26	S-curve for deceleration begin time 1	0.00
01-27	S-curve for deceleration arrival time 2	0.00
06-03	Over-current stall prevention during acceleration	200
06-04	Over-current stall prevention during operation	200
06-05	Acceleration / deceleration time selection for stall prevention at constant speed	2: By the second acceleration / deceleration time
07-23	Automatic voltage regulation (AVR) function	1: Disable AVR
07-26	Torque compensation gain	0

Setting 11: Tension PID

The following table lists the relevant tension PID setting application parameters.

Pr.	Parameter Name	Settings
00-20	Master frequency command source (AUTO, REMOTE)	9 (PID controller)

Pr.	Parameter Name	Settings
00-21	Operation command source (AUTO, REMOTE)	1 (External terminals)
01-00	Motor 1 maximum operation frequency	Default setting
01-12	Acceleration time 1	3 (sec.)
01-13	Deceleration time 1	3 (sec.)
03-00	Analog input selection (AVI)	5 (PID feedback signal)
03-50	Analog input curve selection	1: Three-point curve of AVI
03-63	AVI voltage lowest point	0.00
03-65	AVI voltage mid-point	9.99
03-66	AVI proportional mid-point	100%
08-00	Terminal selection of PID feedback	1: Negative PID feedback: by analog input (Pr.03-00, Pr.03-01)
08-01	Proportional gain (P)	10
08-02	Integral time (I)	1
08-20	PID mode selection	1: Parallel connection
08-21	Enable PID to change the operation direction	0: Operation direction cannot be changed
08-65	PID target value source	1: Pr.08-66 setting
08-66	PID target value setting	50%

Setting 12: Tension PID + master / auxiliary frequency

The following table lists the relevant tension PID + master / auxiliary frequency setting application parameters.

Pr.	Parameter Name	Settings
00-20	Master frequency command source (AUTO, REMOTE)	9 (PID controller)
00-21	Operation command source (AUTO, REMOTE)	1 (External terminals)
01-00	Motor 1 maximum operation frequency	Default setting
01-12	Acceleration time 1	3 (sec.)
01-13	Deceleration time 1	3 (sec.)
00-35	Auxiliary frequency source	3: Analog input
03-00	Analog input selection (AVI)	5 (PID feedback signal)
03-01	Analog input selection (ACI)	12: Auxiliary frequency input
03-10	Reverse setting when analog signal input is negative frequency	0: Negative frequency input is not allowed. The digital keypad or external terminal controls the forward and reverse direction.
03-12	Analog input gain (ACI)	100.0%
03-29	ACI terminal input selection	1: 0–10 V

Pr.	Parameter Name	Settings
03-50	Analog input curve selection	1: Three-point curve of AVI
03-63	AVI voltage lowest point	0.00
03-65	AVI voltage mid-point	9.99
03-66	AVI proportional mid-point	100%
08-00	Terminal selection of PID feedback	1: Negative PID feedback: by analog input (Pr.03-00, Pr.03-01)
08-01	Proportional gain (P)	10
08-02	Integral time (I)	1
08-20	PID mode selection	1: Parallel connection
08-21	Enable PID to change the operation direction	0: Operation direction cannot be changed
08-65	PID target value source	1: Pr.08-66 setting
08-66	PID target value setting	50%
08-67	Master and auxiliary reverse running cutoff frequency	10%

13-01 – 13-50 Application Parameters (User-Defined)

[This page intentionally left blank]

14 Protection Parameters (2)

✓You can set this parameter during operation.

14-50	Output Frequency at Malfunction 2
14-54	Output Frequency at Malfunction 3
14-58	Output Frequency at Malfunction 4
14-62	Output Frequency at Malfunction 5
14-66	Output Frequency at Malfunction 6

Default: Read only

Settings 0.00–599.00 Hz

📖 When an error occurs, you can check the output frequency for the malfunction. If the error happens again, this parameter overwrites the previous record.

14-51	DC bus Voltage at Malfunction 2
14-55	DC bus Voltage at Malfunction 3
14-59	DC bus Voltage at Malfunction 4
14-63	DC bus Voltage at Malfunction 5
14-67	DC bus Voltage at Malfunction 6

Default: Read only

Settings 0.0–6553.5 V

📖 When an error occurs, you can check the DC bus voltage for the malfunction. If the error happens again, this parameter overwrites the previous record.

14-52	Output Current at Malfunction 2
14-56	Output Current at Malfunction 3
14-60	Output Current at Malfunction 4
14-64	Output Current at Malfunction 5
14-68	Output Current at Malfunction 6

Default: Read only

Settings 0.00–655.35 Amps

📖 When an error occurs, you can check the output current for the malfunction. If the error happens again, this parameter overwrites the previous record.

14-53	IGBT Temperature at Malfunction 2
14-57	IGBT Temperature at Malfunction 3
14-61	IGBT Temperature at Malfunction 4
14-65	IGBT Temperature at Malfunction 5
14-69	IGBT Temperature at Malfunction 6

Default: Read only

Settings -3276.7–3276.7°C

📖 When an error occurs, you can check the IGBT temperature for the malfunction. If the error happens again, this parameter overwrites the previous record.

14-70	Fault Record 7
14-71	Fault Record 8
14-72	Fault Record 9
14-73	Fault Record 10

Default: 0

Settings

0: No fault record

1: Over-current during acceleration (ocA)

2: Over-current during deceleration (ocd)

3: Over-current during steady operation (ocn)

4: Ground fault (GFF)

6: Over-current at STOP (ocS)

7: Over-voltage during acceleration (ovA)

8: Over-voltage during deceleration (ovd)

9: Over-voltage during constant speed (ovn)

10: Over-voltage at stop (ovS)

11: Low-voltage during acceleration (LvA)

12: Low-voltage during deceleration (Lvd)

13: Low-voltage during constant speed (Lvn)

14: Low-voltage at stop (LvS)

15: Phase loss protection (orP)

16: IGBT overheating (oH1)

18: IGBT temperature detection failure (tH1o)

21: Over load (oL)

22: Electronics thermal relay 1 protection (EoL1)

23: Electronics thermal relay 2 protection (EoL2)

24: Motor PTC overheating (oH3)

26: Over-torque 1 (ot1)

27: Over-torque 2 (ot2)

28: Under current (uC)

31: EEPROM read error (cF2)

33: U-phase error (cd1)

34: V-phase error (cd2)

35: W-phase error (cd3)

36: cc (current clamp) hardware error (Hd0)

37: oc (over-current) hardware error (Hd1)

40: Auto-tuning error (AUE)

41: PID loss ACI (AFE)

43: PG feedback loss (PGF2)

44: PG feedback stall (PGF3)

45: PG slip error (PGF4)

48: ACI loss (ACE)
49: External fault (EF)
50: Emergency stop (EF1)
51: External Base Block (bb)
52: Password is locked (Pcod)
54: Illegal command (CE1)
55: Illegal data address (CE2)
56: Illegal data value (CE3)
57: Data is written to read-only address (CE4)
58: Modbus transmission time-out (CE10)
61: Y-connection / △-connection switch error (ydc)
62: Deceleration energy backup error (dEb)
63: Over slip error (oSL)
72: STO Loss (STL1)
76: STO (STo)
77: STO Loss 2 (STL2)
78: STO Loss 3 (STL3)
79: U-phase over-current before run (Aoc)
80: V-phase over-current before run (boc)
81: W-phase over-current before run (coc)
82: Output phase loss U phase (oPL1)
83: Output phase loss V phase (oPL2)
84: Output phase loss W phase (oPL3)
87: Low frequency overload protection (oL3)
89: Rotor position detection error (roPd)
101: CANopen guarding error (CGdE)
102: CANopen heartbeat error (CHbE)
104: CANopen bus off error (CbFE)
105: CANopen index error (CidE)
106: CANopen station address error (CAdE)
107: CANopen memory error (CFrE)
121: Internal communication error (CP20)
123: Internal communication error (CP22)
124: Internal communication error (CP30)
126: Internal communication error (CP32)
127: Internal communication error (CP33)
128: Over-torque 3 (ot3)
129: Over-torque 4 (ot4)
134: Internal communication error (EoL3)
135: Internal communication error (EoL4)
140: oc hardware error (Hd6)
141: GFF occurs before run (b4GFF)

142: Auto-tune error 1 (DC test stage) (AuE1)
143: Auto-tune error 2 (High frequency test stage) (AuE2)
144: Auto-tune error 3 (Rotary test stage) (AuE3)
149: Auto-tune error 5 (AuE5)

- The parameters record when the fault occurs and forces a stop.
- When low-voltage at stop fault (LvS) occurs, the fault is not recorded. When low-voltage during operation faults (LvA, Lvd, Lvn) occur, the faults are recorded.
- When the dEb function is valid and enabled, the drive executes dEb and records fault code 62 to Pr.06-17–06-22 and Pr.14-70–14-73 simultaneously.

14-74 Over-Torque Detection Selection (Motor 3)
14-77 Over-Torque Detection Selection (Motor 4)

Default: 0

Settings 0: No function
1: Continue operation after over-torque detection during constant speed operation
2: Stop after over-torque detection during constant speed operation
3: Continue operation after over-torque detection during RUN
4: Stop after over-torque detection during RUN

- When you set Pr.14-74 and Pr.14-77 to 1 or 3, a warning message displays but there is no error record.
- When you set Pr.14-74 and Pr.14-77 to 2 or 4, an error message displays and there is an error record.

14-75 Over-Torque Detection Level (Motor 3)
14-78 Over-Torque Detection Level (Motor 4)

Default: 120

Settings 10–250% (100% corresponds to the rated current of the drive)

14-76 Over-Torque Detection Time (Motor 3)
14-79 Over-Torque Detection Time (Motor 4)

Default: 0.1

Settings 0.1–60.0 sec.

- When the output current exceeds the over-torque detection level (Pr.14-75 or Pr.14-78) and also exceeds the over-torque detection time (Pr.14-76 or Pr.14-79), the over-torque detection follows the setting of Pr.14-74 or Pr.14-77.
- When you set Pr.14-74 or Pr.14-77 to 1 or 3, an ot3/ot4 warning displays while the drive keeps running after over-torque detection. The warning remains on until the output current is smaller than 5% of the over-torque detection level.

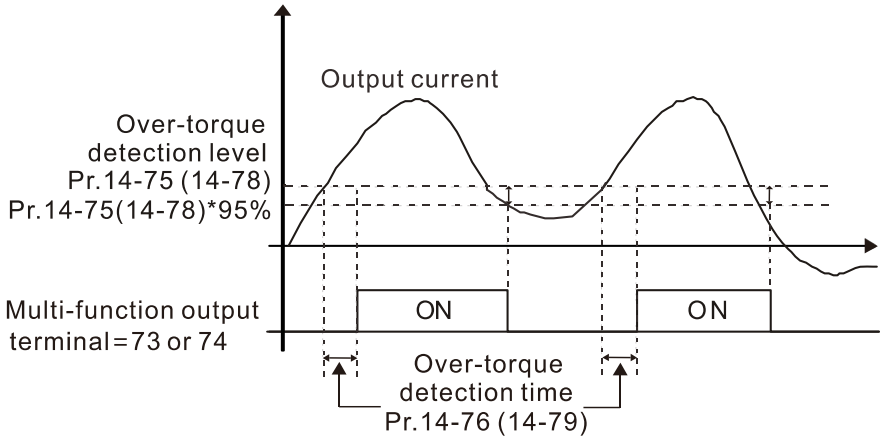

When you set Pr.14-74 or Pr.14-77 to 2 or 4, an ot3/ot4 warning displays and the drive stops running after over-torque detection. The drive does not run until you manually reset it.

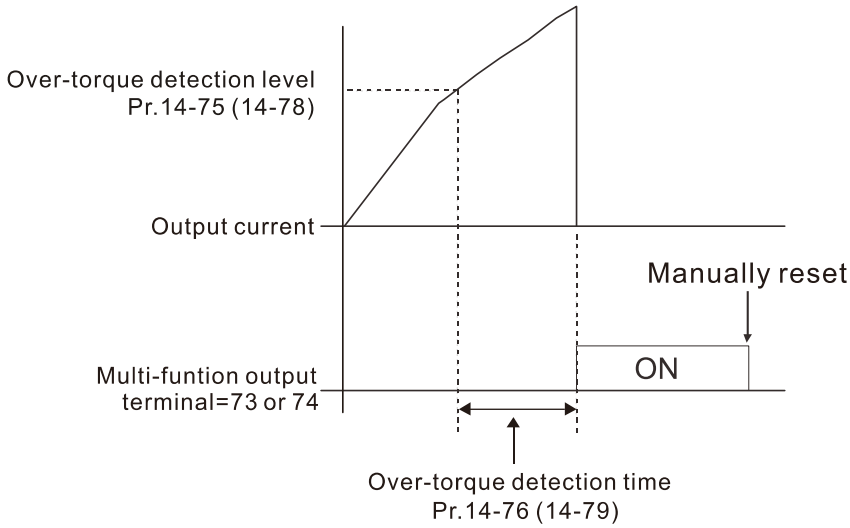

14-80 Electronic Thermal Relay Selection 3 (Motor 3)
14-82 Electronic Thermal Relay Selection 4 (Motor 4)

Default: 2

Settings 0: Inverter motor (with external forced cooling)
1: Standard motor (motor with the fan on the shaft)
2: Disable

Prevents self-cooled motor from overheating under low speed. Use an electronic thermal relay to limit the drive's output power.

Setting the parameter to 0 is suitable for an inverter motor (motor fan using an independent power supply). For this kind of motor, there is no significant correlation between cooling capacity and motor speed. Therefore, the action of electronic thermal relays remains stable in low speed to ensure the load capability of the motor in low speed.

Setting the parameter to 1 is suitable for standard motor (motor fan is fixed on the rotor shaft). For this kind of motor, the cooling capacity is lower in low speed; therefore, the action of an electronic thermal relay reduces the action time to ensure the life of motor.

When the power is cycled frequently, if the power is switched OFF, the electronic thermal relay protection is reset; therefore, even setting the parameter to 0 or 1 may not protect the motor well. If there are several motors connected to one drive, install an electronic thermal relay in each motor.

14-81 Electronic Thermal Relay Action Time 3 (Motor 3)
14-83 Electronic Thermal Relay Action Time 4 (Motor 4)

Default: 60.0

Settings 30.0–600.0 sec.

- Set the parameter to 150% of motor rated current and use with Pr.14-81 and Pr.14-83 to prevent motor damage due to overheating. When it reaches the setting, the drive displays “EoL3 / EoL4”, and the motor coasts to stop.
- Use this parameter to set the action time of the electronic thermal relay. It works based on the I2t characteristic curve of electronic thermal relay, the output frequency and current of the drive, and the operation time to prevent the motor from overheating.

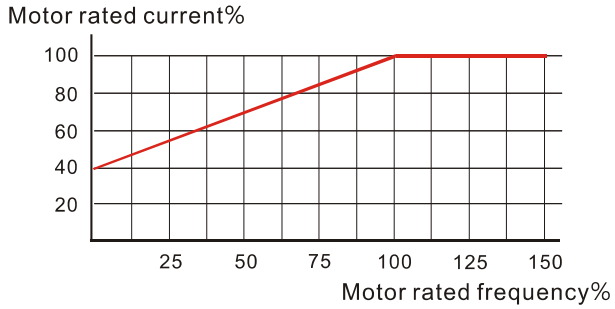

Motor cooling curve with shaft-fixed fan

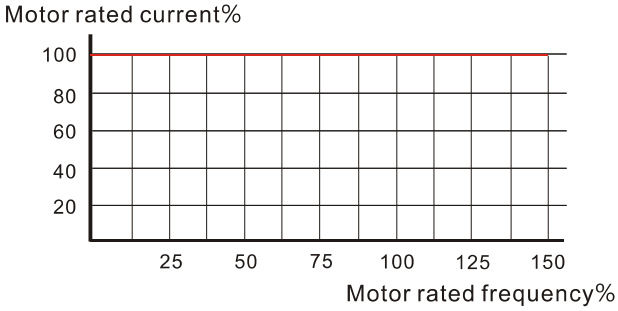

Motor cooling curve with independent fan

- The action of the electronic thermal relay depends on the settings for Pr.14-80 and Pr.14-82.
  1. Pr.14-80 or Pr.14-82 is set to 0 (using inverter motor):
     When the output current of the drive is higher than 150% of the motor rated current (refer to the motor rated current % corresponded to the motor rated frequency in the motor cooling curve with independent fan), the drive starts to count the time. The electronic thermal relay acts when the accumulated time exceeds Pr.14-81 or Pr.14-83.
  2. Pr.14-80 or Pr.14-82 is set to 1 (using standard motor):
     When the output current of the drive is higher than 150% of the motor rated current (refer to the motor rated current % corresponded to the motor rated frequency in the motor cooling curve with shaft-fixed fan), the drive starts to count the time. The electronic thermal relay acts when the accumulated time exceeds Pr.14-81 or Pr.14-83.
     The actual electronic thermal relay action time adjusts according to the drive output current (shown as the motor loading rate %). The action time is short when the current is high, and the action time is long when the current is low. Refer to the following diagram.

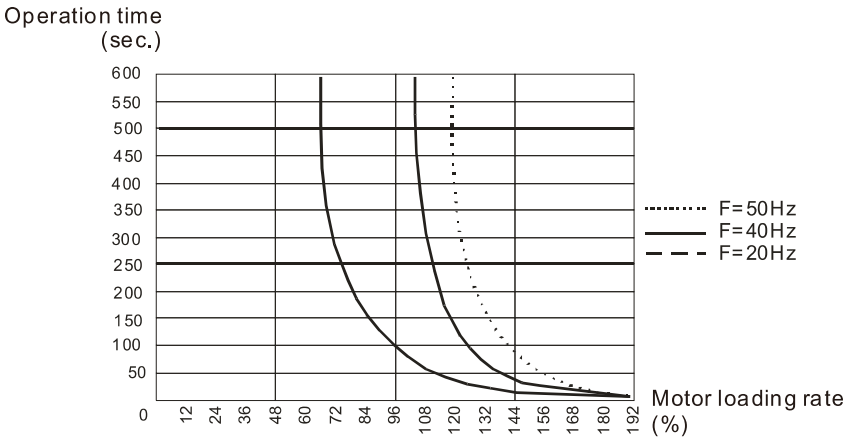

12-2 Adjustment & Application

The followings are abbreviations for different types of motors:

- IM: Induction motor
- PM: Permanent magnet synchronous AC motor
- IPM: Interior permanent magnet synchronous AC motor
- SPM: Surface permanent magnet synchronous AC motor

12-2-1 Permanent-Magnet Synchronous Motor, Space Vector Control Adjustment Procedure (PM SVC, Pr.00-11 = 2)

- PMSVC Control diagram

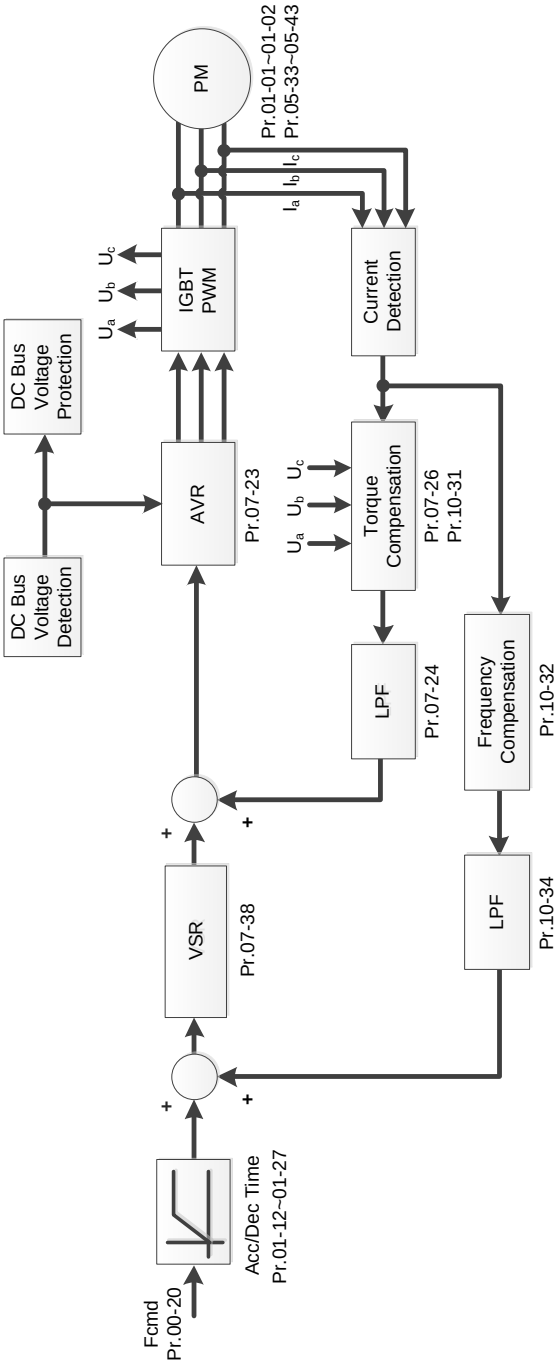

- PM SVC adjustment procedure

  (The number marked on the procedure corresponds to the number of following adjustment explanations)

  (1) PM SVC motor parameters adjustment flowchart

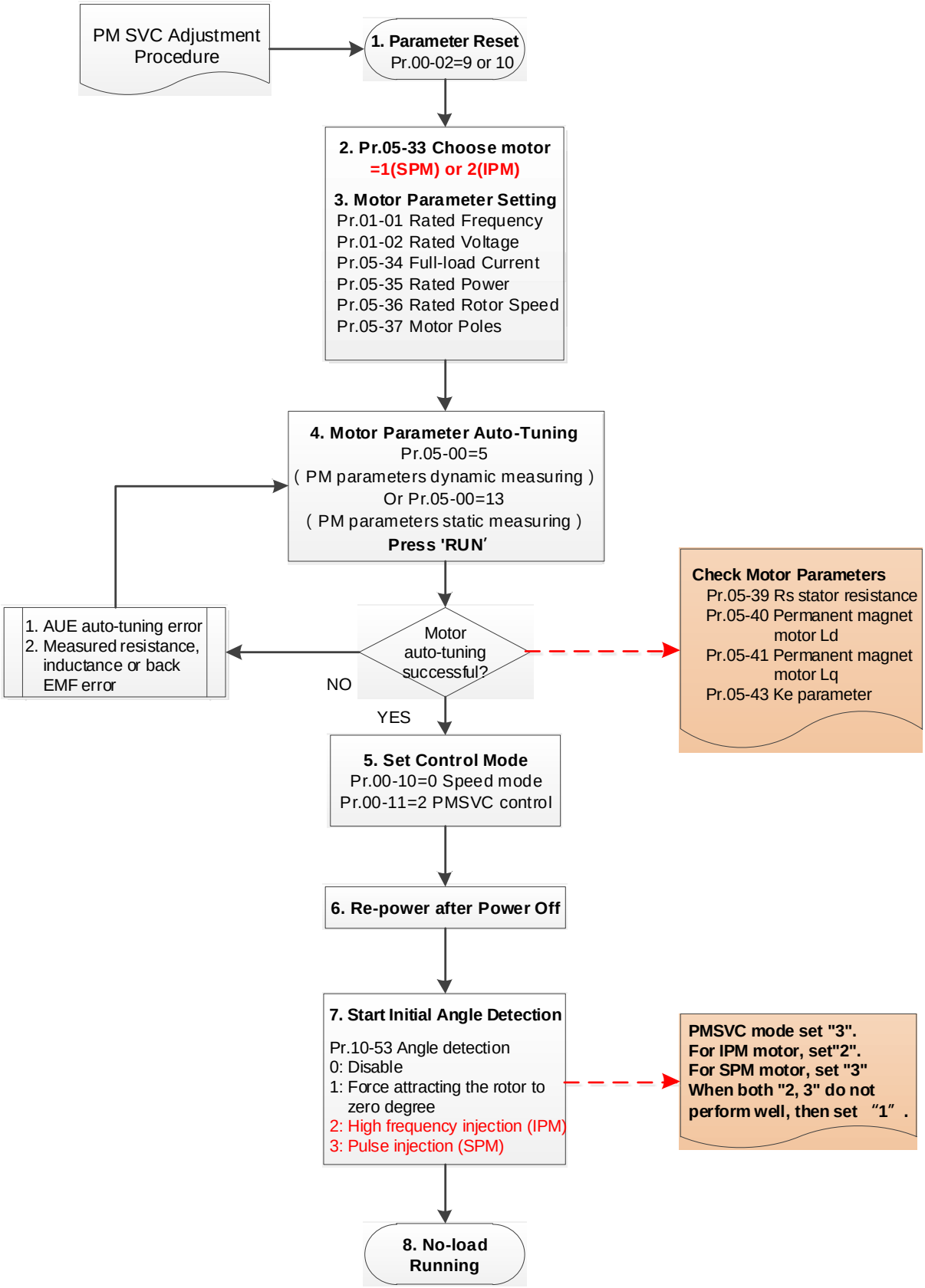

📖 Basic motor parameters adjustment

1. Parameter reset:

   Reset Pr.00-02 = 9 (50 Hz) or 10 (60 Hz) to the default value.

2. Select PM motor type:

   Pr.05-33 = 1 (SPM) or 2 (IPM)

3. Motor nameplate parameter setting:

Parameter	Description
Pr.01-01	Rated frequency (Hz)
Pr.01-02	Rated voltage (V_{AC})
Pr.05-34	Rated current (A)
Pr.05-35	Rated power (kW)
Pr.05-36	Rated rotor speed (rpm)
Pr.05-37	Number of poles for the motor (poles)

4. PM parameter auto-tuning:

   Set Pr.05-00 = 5 (rolling auto-tuning for PM, with no load) or 13 (static auto-tuning for PM) and press RUN key to finish motor auto-tuning, then you will get the following parameters:

Parameter	Description
Pr.05-39	Stator resistance for a permanent magnet motor (Ω)
Pr.05-40	Permanent magnet motor Ld (mH)
Pr.05-41	Permanent magnet motor Lq (mH)
Pr.05-43	Ke parameter of a permanent magnet motor ($V_{phase \cdot rms}$ / krpm) (When Pr.05-00 = 5, the Ke parameter is measured based on the actual motor rotation.) (When Pr.05-00 = 13, the Ke parameter is automatically calculated based on the motor power, current and rotor speed.)

   If an auto-tuning error (AUE) occurs, refer to Chapter 14 “Fault Codes and Descriptions” for further treatment.

AUE Error (code)	Description
AUE (40)	Auto-tuning error
AUE1 (142)	Auto-tuning error 1 (No feedback current error)
AUE2 (143)	Auto-tuning error 2 (Motor phase loss error)

5. Set control mode

   Control mode for the drive: Pr. 00-10 = 0: Speed mode

   Control mode for the motor: Pr. 00-11 = 2: PM SVC mode

6. Re-power on after power off.

7. Measure the initial magnetic pole angle of PM

   Set Pr.10-53 PM initial rotor position detection method

   0: Disabled

   1: Using I/F current command (Pr.10-31) to attract the rotor to zero degrees

   2: High frequency injection

   3: Pulse injection

   (For IPM, the setting value is suggested to be 2; for SPM, the setting value is suggested to be 3. You can choose the setting 1 if the result is not good of setting as 2 or 3.)

(2) PM SVC adjustment flowchart for operation with no load / light load

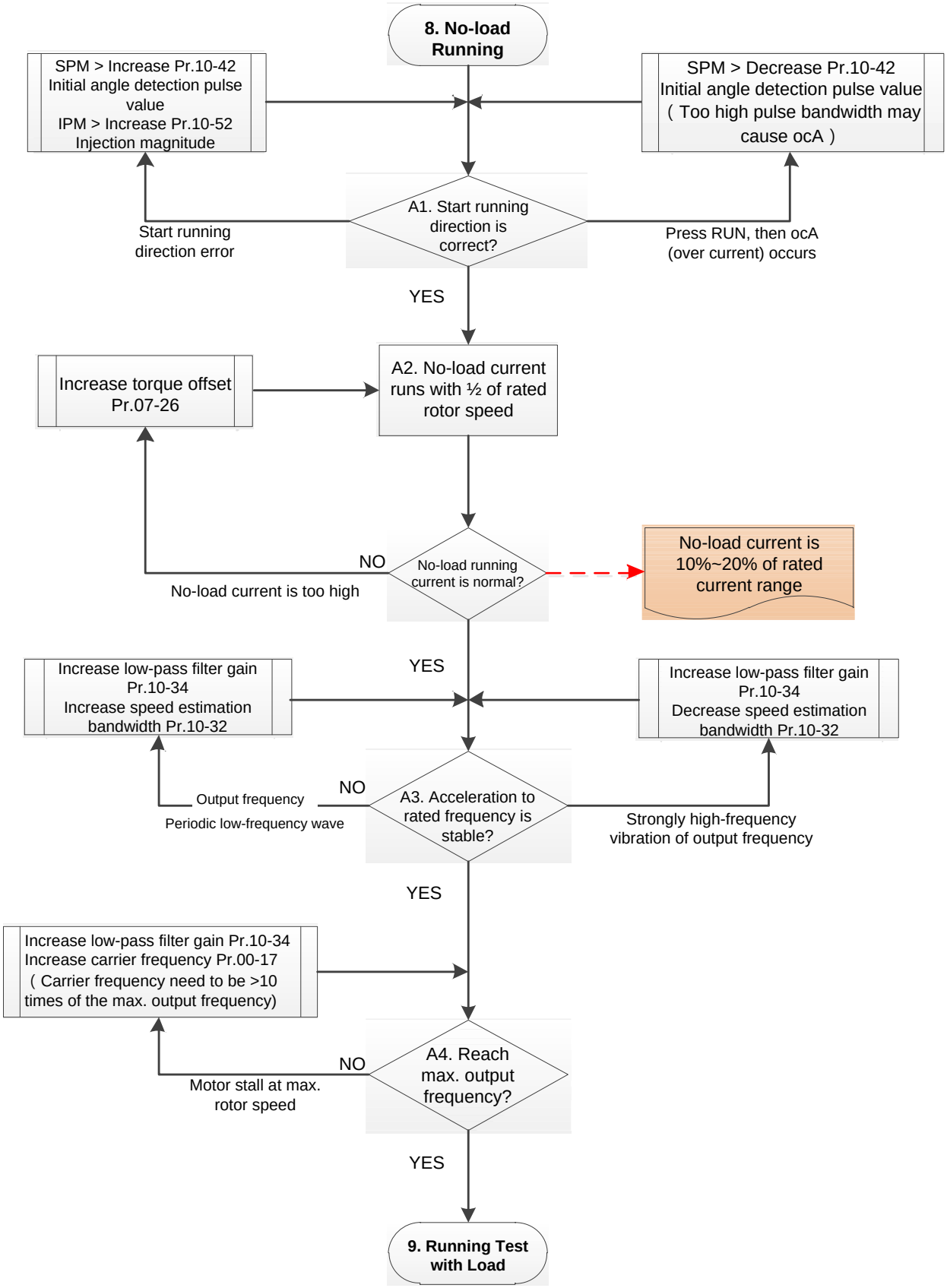

📖 Adjustment for operation with light load

8. Start the motor without load / with light load and operate to 1/2 of the rated rotor speed

A1. Start operation direction:

a. If the start operation direction is wrong

SPM: increase the current proportion for Pr.10-42 (initial angle detection pulse value) to improve the accuracy of the angle detection.

IPM: Increase the voltage for Pr.10-52 (injection magnitude) to improve the accuracy of the angle detection.

b. If an ocA error occurs when pressing RUN to start the motor, decrease the current proportion for Pr.10-42 (initial angle detection pulse value).

A2. Operates the motor in 1/2 of the rated rotor speed, adjust the no-load operating current

If the no-load operating current exceeds 20% of the rated current, increase Pr.07-26 (torque compensation gain) and observe the no-load operating current.

A3. Accelerate to the rated frequency and observe if the motor operates stably.

a. If the motor output rotor speed presents periodic low-frequency wave, increase Pr.10-34 (PM sensorless speed estimator low-pass filter gain), or increase Pr.10-32 (PM FOC sensorless speed estimator bandwidth).

b. If the output frequency reflects high frequency vibration, decrease Pr.10-34 or decrease Pr.10-32.

A4. Accelerate the motor to the maximum rotor speed, and observe if it operates stably.

If the motor stalls when accelerating to the maximum rotor speed, then increase Pr.10-34 (PM sensorless speed estimator low-pass filter gain), or increase Pr.00-17 (carrier frequency, you must set the carrier frequency larger than 10 times of the maximum output frequency)

(3) PM SVC adjustment flowchart for operation starts with load

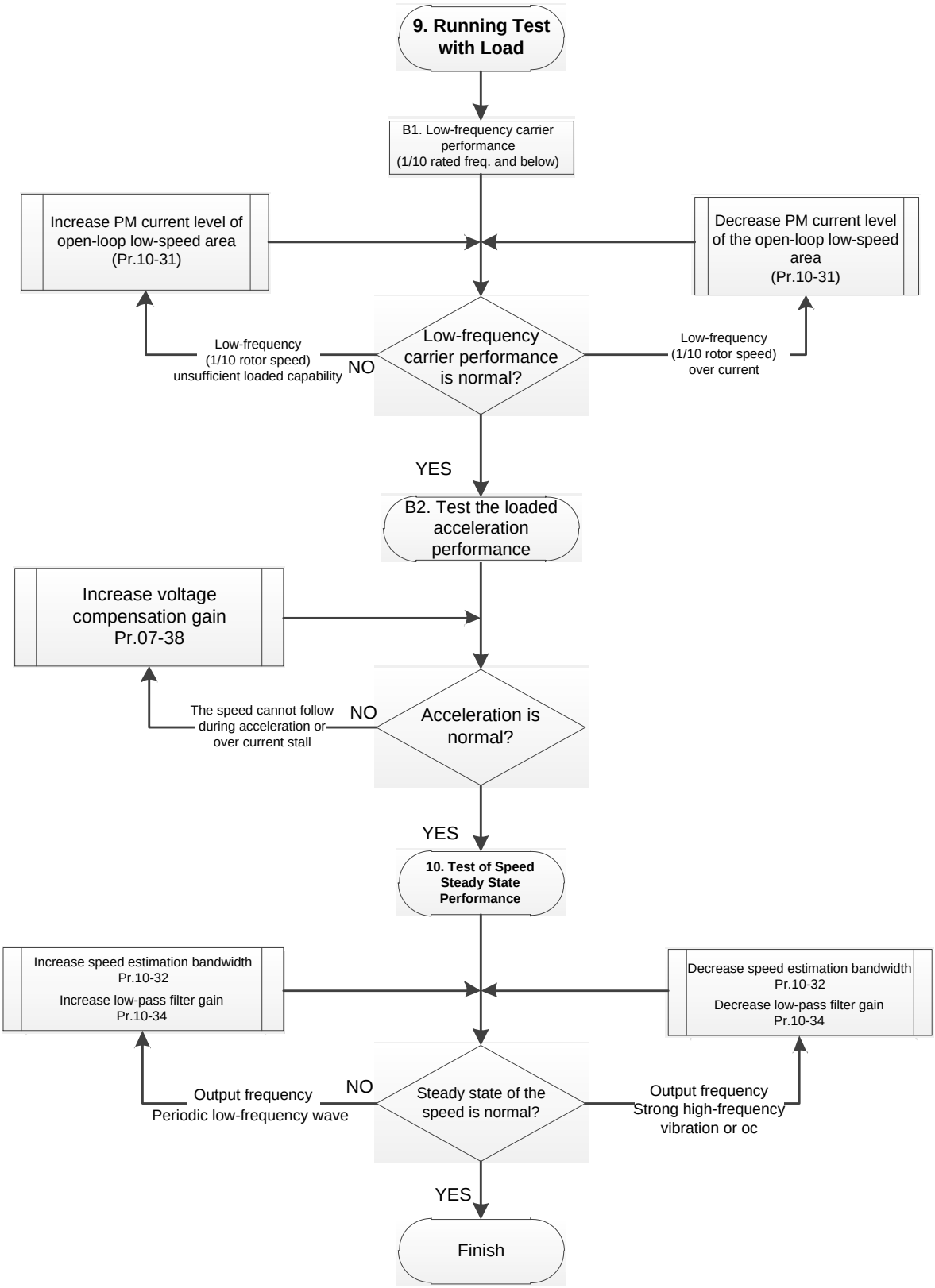

📖 Adjustment for operation with heavy load

9. Load operating test

B1. Low-frequency loading performance is below 1/10 of rated frequency:

a. If the low-frequency loading performance is insufficient, or the rotor speed is not smooth, increase Pr.10-31 (current command of I/F mode).

b. If the low-frequency current is large, decrease Pr.10-31 (current command of I/F mode).

B2. Test the with-load accelerating performance:

When the motor operates in 1/10 of rotor speed and above, if the speed cannot follow the acceleration time during accelerating, or the current stalls, increase Pr.07-38 (PMSVC voltage feedback forward gain).

10. Stability test at constant speed operation: the motor operates stably at constant speed

a. If the motor output rotor speed presents periodic low-frequency wave, increase Pr.10-34 (PM sensorless speed estimator low-pass filter gain), or increase Pr.10-32 (PM FOC sensorless speed estimator bandwidth).

b. If the output frequency reflects high frequency vibration, decrease Pr.10-34 or decrease Pr.10-32.

- PM SVC related parameters

Refer to Section 12-1 Description of Parameter Settings for more details.

Parameter	Description	Unit	Default	Setting Range
Pr.07-24	Torque command filter time	sec.	0.050	0.001–10.000
Pr.07-26	Torque compensation gain	NA	0	0–5000
Pr.07-38	PMSVC voltage feedback forward gain	NA	1.0	0.00–2.00
Pr.10-31	I/F mode, current command	%	40	0–150
Pr.10-32	PM FOC sensorless speed estimator bandwidth	Hz	5.00	0.00–600.00
Pr.10-34	PM sensorless speed estimator low-pass filter gain	NA	1.00	0.00–655.35
Pr.10-39	Frequency point to switch from I/F mode to PM sensorless mode	Hz	20.00	0.00–599.00
Initial Angle Estimating Parameters				
Pr.10-42	Initial angle detection pulse value	NA	1.0	0.0–3.0
Pr.10-51	Injection frequency	Hz	500	0–1200
Pr.10-52	Injection magnitude	V	15.0 / 30.0	0.0–200.0
Pr.10-53	PM initial rotor position detection method 0: Disable 1: Force attracting the rotor to zero degrees 2: High frequency injection 3: Pulse injection	NA	0	0–3

12-2-2 Induction Motor, Sensorless Field-Oriented Control Adjustment Procedure (IMFOC Sensorless, Pr.00-11 = 5)

- Control diagram

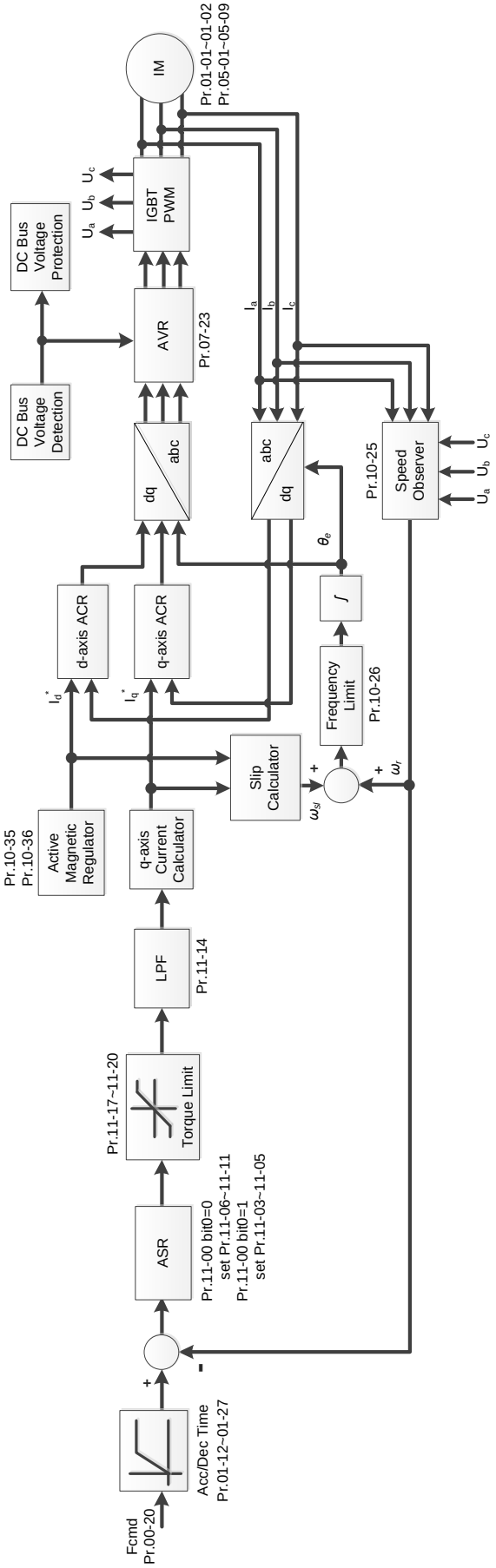

- Adjustment procedure

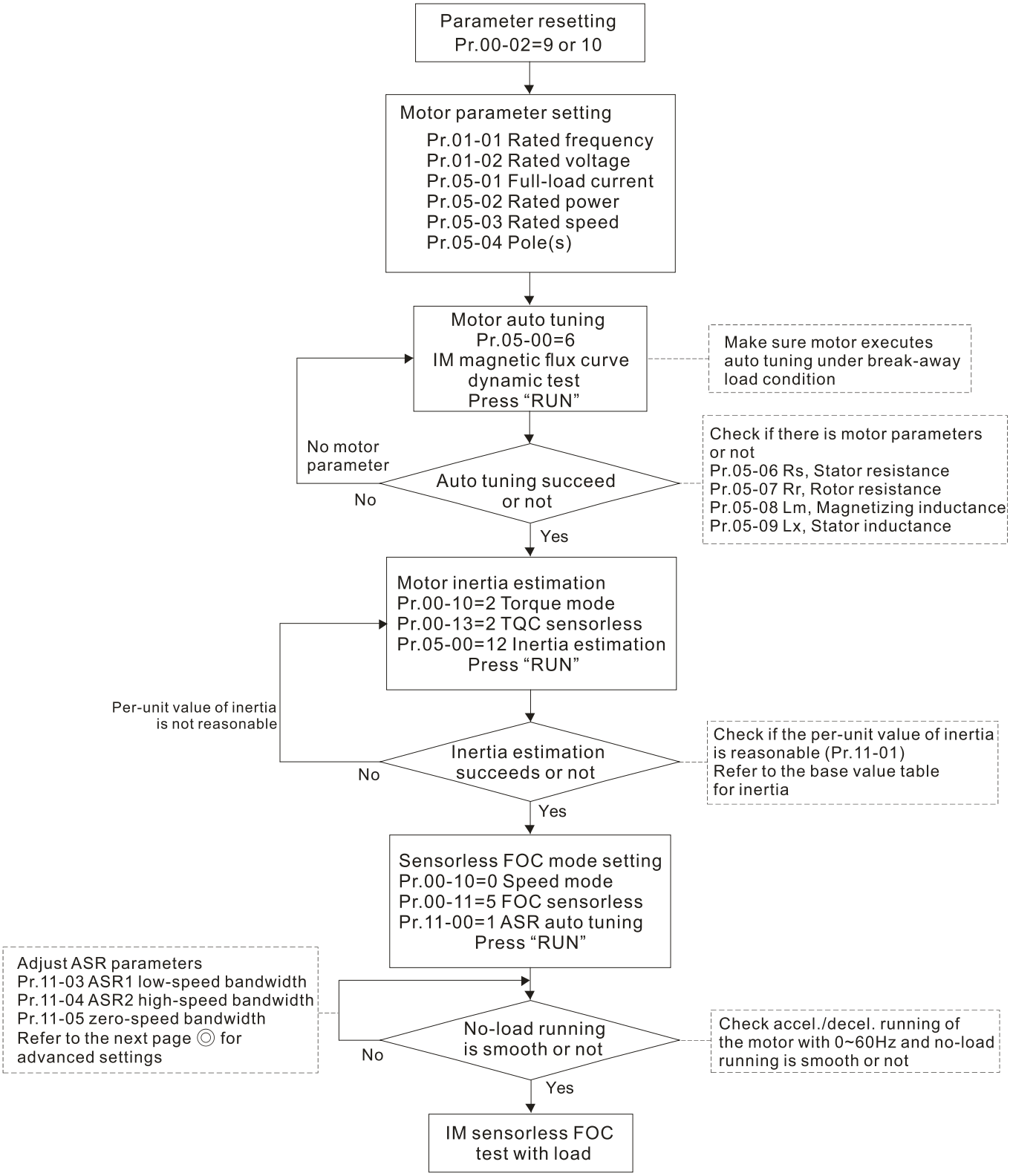

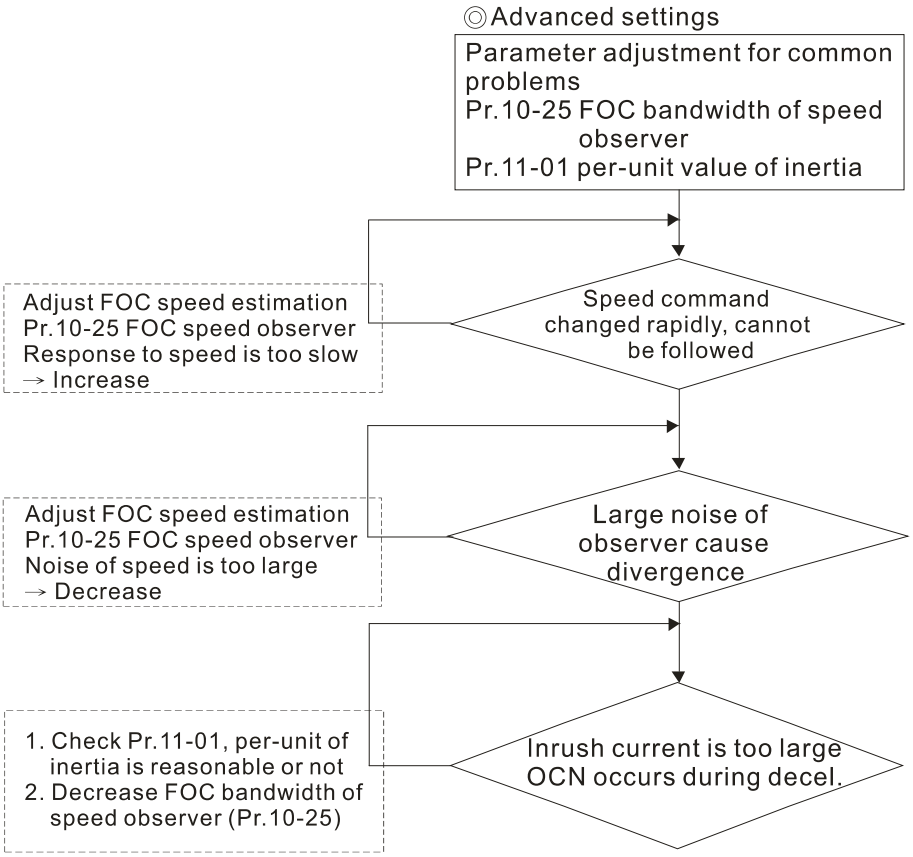

Basic motor parameters adjustment

1. Parameter reset:

   Reset Pr.00-02 = 9 (50 Hz) or 10 (60 Hz) to the default value.

2. Select PM motor type:

   Pr.05-33 = 0 (IM)

3. Motor nameplate parameter setting:

Parameter	Description
Pr.01-01	Motor 1 rated / base frequency (Hz)
Pr.01-02	Motor 1 rated / base voltage (V_{AC})
Pr.05-01	Full-load current for induction motor 1 (A)
Pr.05-02	Rated power for induction motor 1 (kW)
Pr.05-03	Rated speed for induction motor 1 (rpm)
Pr.05-04	Number of poles for induction motor 1 (poles)

4. Motor auto-tuning:

   Press RUN to start auto-tuning of IM magnetic flux curve dynamic test for Pr.05-00 = 1 or 6 (motor is running). Make sure the motor executes auto-tuning under break-away load condition. Check if there are motor parameters after auto-tuning.

Parameter	Description
Pr.05-06	Stator resistance (Rs) for induction motor 1 (Ω)
Pr.05-07	Rotor resistance (Rr) for induction motor 1 (Ω)
Pr.05-08	Magnetizing inductance (Lm) for induction motor 1 (mH)
Pr.05-09	Stator inductance (Lx) for induction motor 1 (mH)

If an auto-tuning error (AUE) occurs, refer to Chapter 14 “Fault Codes and Descriptions” for further treatment.

AUE Error (code)	Description
AUE (40)	Auto-tuning error
AUE1 (142)	Auto-tuning error 1 (No feedback current error)
AUE2 (143)	Auto-tuning error 2 (Motor phase loss error)
AUE3 (144)	Auto-tuning error 3 (No-load current I_0 measuring error)
AUE4 (148)	Auto-tuning error 4 (Leakage inductance Lsigma measuring error)

5. Execute inertia estimation for IM (optional), press RUN key to start the process.
   - Set Pr.00-10 = 2, torque mode
   - Set Pr.00-13 = 2, IM TQC sensorless
   - Set Pr.05-00 = 12, FOC sensorless inertia estimation

   Check if the estimated value for Pr.11-01 is reasonable (refer to the explanation of Pr.11-00) when the inertia estimation process is finished, the base value table of inertia is as below (unit: kg-cm^2).

HP	Inertia	HP	Inertia
1	0.00023	10	0.00358
2	0.00043	15	0.00743
3	0.00083	20	0.00953
5	0.00148	25	0.01428
7.5	0.0026	30	0.01765

6. Execute IMFOC Sensorless mode, set up the following parameters:
   - Set Pr.00-10 = 0, speed mode
   - Set Pr.00-11 = 5, IMFOC Sensorless
   - Set Pr.11-00 bit0 = 1, use ASR gain auto-tuning

   Press RUN key and start the no load test. Accelerate the motor to the rated speed, and then decelerate to stop, check if the motor runs smoothly.
   - If the motor runs smoothly, then the setting for IMFOC Sensorless is completed.
   - If the motor does not run smoothly or fails to start at low frequency, then refer to the following steps for adjustment.
7. Select auto-tuning gain (Pr.11-00 bit0 = 1), adjust ASR parameters according to the speed response.
   - Set Pr.11-00 bit0 = 1, use auto-tuning for ASR
   - Set Pr.11-03 ASR1 low-speed bandwidth (When the acceleration of low-speed cannot follow the acceleration command, increase the low-speed bandwidth)
   - Set Pr.11-04 ASR2 high-speed bandwidth (When the acceleration in high speed causes vibration or cannot follow the acceleration command, increase high-speed bandwidth)
   - Set Pr.11-05 Zero-speed bandwidth (If the response of start-up is slow or incapable, increase zero-speed bandwidth)
     - The bigger the setting value for ASR bandwidth, the faster the response.
     - The low-speed bandwidth cannot be set too high, or the observer will diverge.

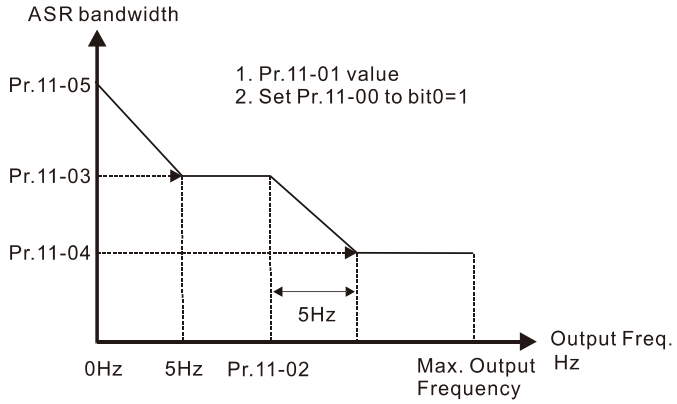

8. Adjust the setting of FOC speed observer and per-unit value of inertia (common problems)
   - Pr.10-25: Set up FOC bandwidth of speed observer

     Situation 1. Speed command changes rapidly, but speed response cannot follow.

     (Speed response is too slow→Increase the setting value)

     Situation 2. The noise of the observer is too large, and causes the operation diverged.

     (Speed noise is too large→Decrease)
   - Pr.11-01: Set up per unit of system inertia

     Situation 1. The inrush current is too high at start-up, and causes an oc error.

     Situation 2. An ocn error occurs during RUN or STOP, and the motor runs randomly.

     a. Check Pr.11-01 whether the JM per-unit of system inertia is too large.

     b. Decrease Pr.10-25 FOC bandwidth for speed observer or Pr.11-05 zero-speed bandwidth.

- IMFOC Sensorless adjustment parameters

  Refer to Section 12-1 Description of Parameter Settings for more details

Parameter	Description	Unit	Default	Settings
00-11	Speed control mode		0	0–7
01-01	Rated frequency (Hz)	Hz	60.00 / 50.00	0.00–599.00
01-02	Rated voltage (V_{AC})	V	Depending on the model power	Depending on the model power
05-00	Motor parameter auto-tuning		0	0–13
05-02	Rated power for induction motor 1 (kW)	kW	Depending on the model power	0.00–655.35
05-03	Rated speed for induction motor 1 (rpm)	rpm	Depending on the motor's number of poles	0–xxxx (Depending on the motor's number of poles)
05-04	Number of poles for induction motor 1 (poles)		4	2–20
05-05	No-load current for induction motor 1 (A)		Depending on the model power	0.00–Pr.05-01 default
05-06	Stator resistance (Rs) for induction motor 1 (Ω)	Ω	Depending on the model power	0.000–65.535
05-07	Rotor resistance (Rr) for induction motor 1 (Ω)	Ω	0.000	0.000–65.535
05-08	Magnetizing inductance (Lm) for induction motor 1 (mH)	mH	0.0	0.0–6553.5

Parameter	Description	Unit	Default	Settings
05-09	Stator inductance (Lx) for induction motor 1 (mH)	mH	0.0	0.0–6553.5
10-25	FOC bandwidth for speed observer	Hz	40.0	20.0–100.0
11-00	System control		513	0–65535
11-01	Per unit of system inertia	pu	256	1–65535
11-02	ASR1 / ASR2 switch frequency	Hz	7.00	5.00–599.00
11-03	ASR1 low-speed bandwidth	Hz	10	1–40 Hz (IM) / 1–100 Hz (PM)
11-04	ASR2 high-speed bandwidth	Hz	10	1–40 Hz (IM) / 1–100 Hz (PM)
11-05	Zero-speed bandwidth	Hz	10	1–40 Hz (IM) / 1–100 Hz (PM)

[This page intentionally left blank]

Chapter 13 Warning Codes

Summary of Warning Codes

ID No.	Warning Name	ID No.	Warning Name
0	No record	50	PLC opposite defect (PLod)
1	Communication error 1 (CE1)	51	PLC save memory error (PLSv)
2	Communication error 2 (CE2)	52	Data defect (PLdA)
3	Communication error 3 (CE3)	53	Function defect (PLFn)
4	Communication error 4 (CE4)	54	PLC buffer overflow (PLor)
5	Communication error 10 (CE10)	55	Function defect (PLFF)
7	Save error 1 (SE1)	56	Checksum error (PLSn)
8	Save error 2 (SE2)	57	No end command (PLEd)
9	IGBT overheating warning (oH1)	58	PLC MCR error (PLCr)
11	PID feedback error (PID)	59	PLC download fail (PLdF)
12	ACI analog signal loss (AnL)	60	PLC scan time fail (PLSF)
13	Under current (uC)	70	ExCom ID fail (ECid)
17	Over speed warning (oSPd)	71	ExCom power loss (ECLv)
18	Speed deviation warning (dAvE)	72	ExCom test mode (ECtt)
19	Phase loss (PHL)	73	ExCom BUS off (ECbF)
20	Over-torque 1 (ot1)	74	ExCom no power (ECnP)
21	Over-torque 2 (ot2)	75	ExCom factory defect (ECFF)
22	Motor overheating (oH3) PTC / PT100	76	ExCom inner error (ECiF)
24	Over slip warning (oSL)	78	ExCom Parameter data error (ECPP)
25	Auto tuning (tUn)	79	ExCom configuration data error (ECPi)
28	Output phase loss (OPHL)	80	Ethernet link fail (ECEF)
30	Copy model error (SE3)	81	Communication time-out (ECto)
31	Over-torque 3 (ot3)	82	Checksum error (ECCS)
32	Over-torque 4 (ot4)	83	Return defect (ECrF)
36	CANopen guarding time-out (CGdn)	84	Modbus TCP over (Eco0)
37	CANopen heartbeat error (CHbn)	85	EtherNet/IP over (ECo1)
39	CANopen BUS off error (CbFn)	86	IP fail (ECiP)
40	CANopen index error (CIdn)	87	Mail fail (EC3F)
41	CANopen station address error (CAdn)	88	ExCom busy (ECbY)
42	CANopen memory error (CFrn)	89	ExCom card break (ECCb)
43	CANopen SDO time-out (CSdn)	90	Copy PLC: password error (CPLP)
44	CANopen SDO receives register overflow (CSbn)	91	Copy PLC: Read mode error (CPL0)
45	CANopen start-up error warning (Cbtn)	92	Copy PLC: Write mode (CPL1)
46	CANopen format error (CPtn)	93	Copy PLC: version error (CPLv)
94	Copy PLC: size error (CPLS)	96	Copy PLC: time-out (CPLt)

ID No.	Warning Name	ID No.	Warning Name
95	Copy PLC: PLC function (CPLF)		

Digital Keypad KPMS-LE01

ID No.	Display on LCD Keypad	Warning Name	Description
1	CE1	Communication error 1 (CE1)	RS-485 Modbus illegal function code
Action and Reset			
Action Condition		When the function code is not 03, 06, 10 and 63	
Action Time		Immediately act	
Warning Setting Parameter		N/A	
Reset Method		“Warning” occurs when Pr.09-02 = 0 and the motor drive keeps running. The drive resets automatically when receiving the correct function code.	
Reset Condition		Immediately reset	
Record		N/A	
Cause		Corrective Actions	
Incorrect communication command from upper unit		Check if the communication command is correct.	
Malfunction caused by interference		Verify the wiring and grounding of the communication circuit. It is recommended to separate the communication circuit from the main circuit, or wire in 90 degree for effective anti-interference performance.	
Different communication setting from the upper unit		Check if the setting for Pr.09-04 is the same as the setting for the upper unit.	
Disconnection or bad connection of the cable		Check the cable and replace it if necessary.	

ID No.	Display on LCD Keypad	Warning Name	Description
2	CE2	Communication error 2 (CE2)	RS-485 Modbus illegal data address

Action and Reset	
Action Condition	When the input data address is incorrect
Action Time	Immediately act
Warning Setting Parameter	N/A
Reset Method	“Warning” occurs when Pr.09-02 = 0 and the motor drive keeps running. The drive resets automatically when receiving the correct data address.
Reset Condition	Immediately reset
Record	N/A
Cause	Corrective Actions
Incorrect communication command from upper unit	Check if the communication command is correct.
Malfunction caused by interference	Verify the wiring and grounding of the communication circuit. It is recommended to separate the communication circuit from the main circuit, or wire in 90 degree for effective anti-interference performance.
Different communication setting from the upper unit	Check if the setting for Pr.09-04 is the same as the setting for the upper unit.
Disconnection or bad connection of the cable	Check the cable and replace it if necessary.

ID No.	Display on LCD Keypad	Warning Name	Description
3	CE3	Communication error 3 (CE3)	RS-485 Modbus illegal data value

Action and Reset	
Action Condition	When the length of communication data is too long
Action Time	Immediately act
Warning Setting Parameter	N/A
Reset Method	“Warning” occurs when Pr.09-02 = 0 and the motor drive keeps running. The drive resets automatically when receiving the correct communication data value.
Reset Condition	Immediately reset
Record	N/A
Cause	**Corrective Actions**
Incorrect communication command from upper unit	Check if the communication command is correct.
Malfunction caused by interference	Verify the wiring and grounding of the communication circuit. It is recommended to separate the communication circuit from the main circuit, or wire in 90 degree for effective anti-interference performance.
Different communication setting from the upper unit	Check if the setting for Pr.09-04 is the same as the setting for the upper unit.
Disconnection or bad connection of the cable	Check the cable and replace it if necessary.

ID No.	Display on LCD Keypad	Warning Name	Description
4	CE4	Communication error 4 (CE4)	RS-485 Modbus data is written to read-only address

Action and Reset	
Action Condition	When the data is written to read-only address
Action Time	Immediately act
Warning Setting Parameter	N/A
Reset Method	“Warning” occurs when Pr.09-02 = 0 and the motor drive keeps running. The drive resets automatically when receiving the correct written address of communication data.
Reset Condition	Immediately reset
Record	N/A

Cause	Corrective Actions
Incorrect communication command from upper unit	Check if the communication command is correct.
Malfunction caused by interference	Verify the wiring and grounding of the communication circuit. It is recommended to separate the communication circuit from the main circuit, or wire in 90 degree for effective anti-interference performance.
Different communication setting from the upper unit	Check if the setting for Pr.09-04 is the same as the setting for the upper unit.
Disconnection or bad connection of the cable	Check the cable and replace it if is necessary.

ID No.	Display on LCD Keypad	Warning Name	Description
5	CE10	Communication error 10 (CE10)	RS-485 Modbus transmission time-out
Action and Reset			
Action Condition		When the communication time exceeds the detection time of Pr.09-03 communication time-out	
Action Time		Pr.09-03	
Warning Setting Parameter		N/A	
Reset Method		“Warning” occurs when Pr.09-02 = 0 and the motor drive keeps running. The drive resets automatically when receiving the next communication packet.	
Reset Condition		Immediately reset	
Record		N/A	
Cause		Corrective Actions	
The upper unit does not transmit the communication command within Pr.09-03 setting time		Check if the upper unit transmits the communication command within the setting time for Pr.09-03.	
Malfunction caused by interference		Verify the wiring and grounding of the communication circuit. It is recommended to separate the communication circuit from the main circuit, or wire in 90 degree for effective anti-interference performance.	
Different communication setting from the upper unit		Check if the setting for Pr.09-04 is the same as the setting for the upper unit.	
Disconnection or bad connection of the cable		Check the cable and replace it if necessary.	

ID No.	Display on LCD Keypad	Warning Name	Description
7	SE1	Save error 1 (SE1)	Keypad COPY error 1: Keypad copy time-out

Action and Reset	
Action Condition	“SE1” warning occurs when the keypad does not transmit the COPY command to the drive, and does not transmit any data to the drive again in 10 ms at the time you copy the parameters to the drive.
Action Time	10 ms
Warning Setting Parameter	N/A
Reset Method	Manual reset
Reset Condition	Immediately reset
Record	N/A
Cause	Corrective Actions
Communication connection error	SE1: The causes of error are mostly communication problems between the keypad and control board. Potential causes include communication signal interference and the unacceptable communication command to the Slave. Check if the error occurs randomly, or only occurs when copying certain parameters (the error displays on the upper right corner of the copy page). If you cannot clear the error, please contact Delta.
Keypad error	
Control board error	

ID No.	Display on LCD Keypad	Warning Name	Description
8	SE2	Save error 2 (SE2)	Keypad COPY error 2: parameter writing error
Action and Reset			
Action Condition		“SE2” warning occurs when writing the parameters incorrectly at the time you copy parameters to the drive. For example, you copy the new firmware version with added parameters to the drive with old firmware version.	
Action Time		N/A	
Warning Setting Parameter		N/A	
Reset Method		Manual reset	
Reset Condition		Immediately reset	
Record		N/A	
Cause		Corrective Actions	
Add new parameters to the new firmware version.		SE2: In this stage, the copied data has been transmitted to the Slave. The Slave compares and processes the copied data, and then saves the data to the Data ROM. During the process, the data error (should be attribution error) may occur, or the data cannot be saved to EEPROM. At this time, the warning occurs. It is suggested to check the status of Data ROM and remove the error causes first. If you cannot clear the error, please contact Delta.	
Malfunction caused by interference		Verify the wiring and grounding of the main circuit and control circuit for effective anti-interference performance.	

ID No.	Display on LCD Keypad	Warning Name	Description
9	oH1	IGBT over-heating warning (oH1)	The AC motor drive detects IGBT overheating and exceeds the protection condition of oH1 warning. (When Pr.06-15 is higher than the IGBT overheating protection condition, the drive shows oH1 error without displaying oH1 warning.)

Action and Reset	
Action Condition	Pr.06-15
Action Time	"oH1" warning occurs when IGBT temperature is higher than Pr.06-15 setting value.
Warning Setting Parameter	N/A
Reset Method	Auto-reset
Reset Condition	The drive auto-resets when IGBT temperature is lower than oH1 warning level minus (–) 5°C
Record	N/A
Cause	**Corrective Actions**
Check if the ambient temperature or temperature inside the cabinet is too high, or if there is obstruction in the ventilation hole of the control cabinet.	1. Check the ambient temperature. 2. Regularly inspect the ventilation hole of the control cabinet. 3. Change the installed place if there are heating objects, such as brake resistors, in the surroundings. 4. Install / add cooling fan or air conditioner to lower the temperature inside the cabinet.
Check if there is any obstruction on the heat sink or if the fan is running	Remove the obstruction or replace the cooling fan.
Insufficient ventilation space	Increase ventilation space of the drive.
Check if the drive matches the corresponded loading	1. Decrease loading. 2. Decrease the carrier wave. 3. Replace with a drive with larger capacity.
The drive has run 100% or more of the rated output for a long time	Replace with a drive with larger capacity.

oH1 Warning Condition

Voltage	Model (**NOTE:** x = A or E)	oH1 (ºC)	oH Warning oH1 Warning = Pr.06-15 (ºC)
One-phase_115V	VFD1A6MS11x□□AA	95	oH1 Warning = oH1 – 5
	VFD2A5MS11x□□AA	95	
	VFD4A8MS11x□□AA	100	
One-phase_230V	VFD1A6MS21x□□AA	110	
	VFD2A8MS21x□□AA	100	
	VFD4A8MS21x□□AA	110	
	VFD7A5MS21x□□AA	105	
	VFD11AMS21x□□AA	115	
Three-phase_230V	VFD1A6M23x□□AA	100	
	VFD2A8MS23x□□AA	100	
	VFD4A8MS23x□□AA	105	

Voltage	Model (**NOTE:** x = A or E)	oH1 (ºC)	oH Warning oH1 Warning = Pr.06-15 (ºC)
Three-phase_230V	VFD7A5MS23x□□AA	105	oH1 Warning = oH1 – 5
	VFD11AMS23x□□AA	95	
	VFD17AMS23x□□AA	105	
	VFD25AMS23x□□AA	115	
	VFD33AMS23x□□AA	115	
	VFD49AMS23x□□AA	115	
	VFD65AMS23x□□AA	115	
Three-phase_460V	VFD1A5MS43x□□AA	105	
	VFD2A7MS43x□□AA	115	
	VFD4A2MS43x□□AA	105	
	VFD5A5MS43x□□AA	95	
	VFD7A3MS43x□□AA	100	
	VFD9A0MS43x□□AA	115	
	VFD13AMS43x□□AA	105	
	VFD17AMS43x□□AA	115	
	VFD25AMS43x□□AA	115	
	VFD32AMS43x□□AA	115	
	VFD38AMS43x□□AA	110	
	VFD45AMS43x□□AA	115	
575V	VFD1A7MS53x□□AA	100	
	VFD3A0MS53x□□AA	95	
	VFD4A2MS53x□□AA	95	
	VFD6A6MS53x□□AA	100	
	VFD9A9MS53x□□AA	100	
	VFD12AMS53x□□AA	105	

ID No.	Display on LCD Keypad	Warning Name	Description
11	PCd	PID feedback error (PID)	PID feedback loss (warning for analog feedback signal; works only when PID enables)

Action and Reset		
Action Condition	When the analog input is lower than 4 mA (only detects analog input 4–20 mA)	
Action Time	Pr.08-08	
Warning Setting Parameter	Pr.08-09 0: Warn and continue operation 1: Fault and ramp to stop 2: Fault and coast to stop 3: Warn and operate at last frequency	
Reset Method	Auto	“Warning” occurs when Pr.08-09 = 0 or 3. The “Warning” automatically clears when the feedback signal is larger than 4 mA.
	Manual	“Error” occurs when Pr.08-09 = 1 or 2. You must reset manually.
Reset Condition	Immediately reset	
Record	Records when Pr.08-09 = 1 or 2 (“Error”). Does not record when Pr.08-09 = 3 (“Warning”).	

Cause	Corrective Actions
Loose or broken PID feedback wiring	Tighten the terminals again. Replace with a new cable.
Feedback device malfunction	Replace with a new feedback device.
Hardware error	If the PID error still occurs after checking all the wiring, return to the factory for repair.

ID No.	Display on LCD Keypad	Warning Name	Description
12	AnL	ACI analog signal loss (AnL)	Analog input current loss (including all analog 4–20 mA signals)

Action and Reset		
Action Condition	When the analog input is lower than 4 mA (only detects analog input 4–20 mA)	
Action Time	Immediately act	
Warning Setting Parameter	Pr.03-19 0: Disable 1: Continue operation at the last frequency (warning, keypad displays ANL) 2: Decelerate to 0 Hz (warning, keypad displays ANL) 3: Stop immediately and display “ACE”	
Reset Method	Auto	“Warning” occurs when Pr.03-19 = 1 or 2. The “Warning automatically clears when the analog input signal is larger than 4 mA.
	Manual	“Error” occurs when Pr.03-19 = 3. You must reset manually.
Reset Condition	Immediately reset	
Record	Does not record when Pr.03-19 = 1 or 2 (“Warning”).	
Cause	Corrective Actions	
Loose or broken ACI wiring	Tighten the terminals again. Replace with a new cable.	
External device error	Replace with a new device.	
Hardware error	If the AnL error still occurs after checking all the wiring, return to the factory for repair.	

ID No.	Display on LCD Keypad	Warning Name	Description
13	uC	Under current (uC)	Low current

Action and Reset		
Action Condition	Pr.06-71	
Action Time	Pr.06-72	
Warning Setting Parameter	Pr.06-73 0: No function 1: Fault and coast to stop 2: Fault and ramp to stop by the 2nd deceleration time 3: Warn and continue operation	
Reset Method	Auto	"Warning" occurs when Pr.06-73 = 3. The "Warning" automatically clears when the output current is larger than (Pr.06-71+0.1 A).
	Manual	"Error" occurs when Pr.06-73 = 1 and 2. You must reset manually.
Reset Condition	Immediately reset	
Record	Does not record when Pr.06-73 = 3 and uC displays ("Warning").	

Cause	Corrective Actions
Broken motor cable	Exclude the connection issue of the motor and its load.
Improper setting for the low current protection	Set the proper settings for Pr.06-71, Pr.06-72 and Pr.06-73.
Low load	Check the loading status. Make sure the loading matches the motor capacity.

ID No.	Display on LCD Keypad	Warning Name	Description
17	oSPd	Over speed warning (oSPd)	Over speed warning

Action and Reset	
Action Condition	The encoder feedback speed > Pr.10-10
Action Time	Pr.10-11
Warning Setting Parameter	Pr.10-12 = 0 0: Warn and continue operation
Reset Method	“Warning” automatically clears when the drive stops
Reset Condition	“Warning” automatically clears when the drive stops
Record	N/A
Cause	Corrective Actions
Improper setting for Pr.10-25 FOC bandwidth for speed observer	Decrease setting value for Pr.10-25.
Improper bandwidth setting for ASR speed controller	Increase the bandwidth setting for ASR speed controller.
Incorrect motor parameter setting	Reset motor parameter and run parameter tuning.
Malfunction caused by interference	Verify the wiring of the control circuit, and the wiring/grounding of the main circuit to prevent interference.

ID No.	Display on LCD Keypad	Warning Name	Description
18	dAvE	Deviation Warning (dAvE)	Over speed deviation warning
Action and Reset			
Action Condition		Pr.10-13	
Action Time		Pr.10-14	
Warning Setting Parameter		Pr.10-15 Encoder Stall and Slip Error Action = 0 0: Warn and continue operation	
Reset Method		“Warning” automatically clears when the drive stops	
Reset Condition		After the drive stops	
Record		N/A	
Cause		Corrective Actions	
Improper parameter setting for the slip error		Reset proper value for Pr.10-13 and Pr.10-14.	
Improper setting for ASR parameter and acceleration / deceleration		Reset ASR parameters. Set proper accel. / decel. time.	
Accel. / Decel. time is too short		Reset proper accel. / decel. time.	
Motor locked		Remove the causes of motor locked.	
Mechanical brake is not released		Check the action timing of the system.	
Incorrect parameter setting of torque limit (Pr.06-12, Pr.11-17–20)		Adjust to proper setting value.	
Malfunction caused by interference		Verify the wiring of the control circuit, and the wiring/grounding of the main circuit to prevent interference.	

ID No.	Display on LCD Keypad	Warning Name	Description
19	PHL	Phase loss (PHL)	Input phase loss warning

Action and Reset	
Action Condition	Hardware detection
Action Time	Immediately act
Warning Setting Parameter	According to Pr.06-53
Reset Method	“Warning” automatically clears when the drive stops
Reset Condition	After the drive stops
Record	N/A
Cause	**Corrective Actions**
Phase loss of the input power	Verify the wiring of the main circuit.
Single phase power input on a three-phase model	Use the model with voltage that matches the power.
The power voltage has changed	If the power of main circuit works well, check if the MC of the main circuit is broken. Cycle the power after verifying the power is normal. If PHL still occurs, return to the factory for repair.
Loose wiring terminal of input power	Tighten the terminal screws with the torque listed in the user manual.
Check if the input cable of three-phase power is broken	Make sure the wiring is correct. Replace the broken part of the cable.
Unbalanced three-phase of the input power	Check the status of three-phase power.

ID No.	Display on LCD Keypad	Warning Name	Description
20	ot 1	Over-torque 1 (ot1)	Over-torque 1 warning

Action and Reset	
Action Condition	Pr.06-07
Action Time	Pr.06-08
Warning Setting Parameter	Pr.06-06 Over-torque Detection Selection (Motor 1) = 1 or 3 0: No function 1: Continue operation after over-torque detection during constant speed operation 2: Stop after over-torque detection during constant speed operation 3: Continue operation after over-torque detection during RUN 4: Stop after over-torque detection during RUN
Reset Method	When the output current < Pr.06-07, the Ot1 warning automatically clears
Reset Condition	When the output current < Pr.06-07, the Ot1 warning automatically clears
Record	N/A

Cause	Corrective Actions
Incorrect parameter setting	Configure the settings for Pr.06-07 and Pr.06-08 again.
Mechanical error (e.g. mechanical lock due to over-torque)	Remove the causes of malfunction.
The load is too large	Decrease the loading. Replace with a motor with larger capacity.
Accel. / Decel. time and working cycle is too short	Increase the setting values for Pr.01-12–01-19 (accel./ decel. time)
V/F voltage is too high	Adjust the V/F curve (Motor 1, Pr.01-01–01-08), especially the setting value for the mid-point voltage (if the mid-point voltage is set too small, the load capacity decreases at low-speed).
The motor capacity is too small	Replace with a motor with larger capacity.
Overload during low-speed operation	Decrease the loading during low-speed operation. Increase the motor capacity.
The torque compensation is too large	Adjust the torque compensation value (Pr.07-26 torque compensation gain) until the output current decreases and the motor does not stall.
Improper parameter settings for the speed tracking function (including restart after momentary power loss and restart after fault)	Correct the parameter settings for speed tracking. Start the speed tracking function. Adjust the maximum current for Pr.07-09 speed tracking.

ID No.	Display on LCD Keypad	Warning Name	Description
21	ot2	Over-torque (ot2)	Over-torque 2 warning

Action and Reset	
Action Condition	Pr.06-10
Action Time	Pr.06-11
Warning Setting Parameter	Pr.06-09 Over-torque Detection Selection (Motor 2) = 1 or 3 0: No function 1: Continue operation after over-torque detection during constant speed operation 2: Stop after over-torque detection during constant speed operation 3: Continue operation after over-torque detection during RUN 4: Stop after over-torque detection during RUN
Reset Method	When the output current < Pr.06-10, the Ot2 warning automatically clears
Reset Condition	When the output current < Pr.06-10, the Ot2 warning automatically clears
Record	N/A

Cause	Corrective Actions
Incorrect parameter setting	Configure the settings for Pr.06-10 and Pr.06-11
Mechanical error (e.g. mechanical lock due to over-torque)	Remove the causes of malfunction.
The load is too large	Decrease the loading. Replace with a motor with larger capacity.
Accel. / Decel. time and working cycle is too short	Increase the setting values for Pr.01-12–01-19 (accel./ decel. time)
V/F voltage is too high	Adjust the V/F curve (Motor 2, Pr.01-35–01-42), especially the setting value for the mid-point voltage (if the mid-point voltage is set too small, the load capacity decreases at low-speed).
The motor capacity is too small	Replace with a motor with larger capacity.
Overload during low-speed operation	Decrease the loading during low-speed operation. Increase the motor capacity.
The torque compensation is too large	Adjust the torque compensation value (Pr.07-71 torque compensation gain) until the output current decreases and the motor does not stall.
Improper parameter settings for the speed tracking function (including restart after momentary power loss and restart after fault)	Correct the parameter settings for speed tracking. Start speed tracking function. Adjust the maximum current for Pr.07-09 speed tracking.

ID No.	Display on LCD Keypad	Warning Name	Description
22_1	oH3	Motor over-heating (oH3) PTC	Motor overheating warning. The AC motor drive detects the temperature inside the motor is too high
Action and Reset			
Action Condition		Pr.03-00=6 (PTC), PTC input condition > Pr.06-30 PTC condition (default = 50%)	
Action Time		Immediately act	
Warning Setting Parameter		Error treatment: Pr.06-29 0: Warn and continue operation 1: Fault and ramp to stop 2: Fault and coast to stop 3: No warning When Pr.06-29 = 0 and when the temperature is ≤ Pr.06-30 condition, the oH3 warning automatically clears. When Pr.06-29 = 0 (“Warning”), it automatically resets.	
Reset Method		When Pr.06-29 = 0, oH3 displays as “Warning”. When the temperature is ≤ Pr.06-30 condition, the oH3 warning automatically clears.	
Reset Condition		When the temperature is ≤ Pr.06-30 condition, the oH3 warning automatically clears.	
Record		N/A	
Cause		Corrective Actions	
Motor locked		Clear the motor lock status.	
The load is too large		Decrease the loading. Replace with a motor with larger capacity.	
Ambien temperature is too high		Change the installed place if there are heating devices in the surroundings. Install/ add cooling fan or air conditioner to lower the ambient temperature.	
Motor cooling system error		Check the cooling system to make it work normally.	
Motor fan error		Replace the fan.	
Operates at low-speed too long		Decrease low-speed operation time. Change to dedicated motor for the drive. Increase the motor capacity.	
Accel. / Decel. time and working cycle is too short		Increase setting values for Pr.01-12–01-19 (accel. / decel. time).	
V/F voltage is too high		Adjust settings for Pr.01-01–01-08 (V/F curve), especially the setting value for the mid-point voltage (if the mid-point voltage is set too small, the load capacity decreases at low-speed).	
Check if the motor rated current matches the motor nameplate		Configure the correct rated current value of the motor again.	
Check if the PTC is properly set and wired		Check the connection between PTC thermistor and the heat protection.	
Check if the setting for stall prevention is correct		Set the stall prevention to the proper value.	
Unbalanced three-phase impedance of the motor		Replace the motor.	
Harmonics is too high		Use remedies to reduce harmonics.	

ID No.	Display on LCD Keypad	Warning Name	Description
22_2	oH3	Motor over-heating (oH3) PT100	Motor overheating warning. The AC motor drive detects the temperature inside the motor is too high.
Action and Reset			
Action Condition		Pr.03-00=11 (PT100), PT100 input condition > Pr.06-57 (default = 7 V)	
Action Time		Immediately act	
Warning Setting Parameter		Error treatment: Pr.06-29 0: Warn and continue operation 1: Fault and ramp to stop 2: Fault and coast to stop 3: No warning When Pr.06-29 = 0 and when the temperature is < Pr.06-56 condition, the oH3 warning automatically clears. If the temperature is between Pr.06-56 and Pr.06-57, the frequency outputs according to the operating frequency setting for Pr.06-58.	
Reset Method		When Pr.06-29 = 0, oH3 displays as “Warning”. When the temperature is < Pr.06-56 condition, the oH3 warning automatically clears.	
Reset Condition		When the temperature is < Pr.06-56 condition, the oH3 warning automatically clears.	
Record		N/A	
Cause		Corrective Actions	
Motor locked		Clear the motor lock status.	
The load is too large		Decrease loading. Replace with a motor with larger capacity.	
Ambien temperature is too high		Change the installed place if there are heating devices in the surroundings. Install/ add cooling fan or air conditioner to lower the ambient temperature.	
Motor cooling system error		Check the cooling system to make it work normally.	
Motor fan error		Replace the fan.	
Operates at low-speed too long		Decrease low-speed operation time. Change to dedicated motor for the drive. Increase the motor capacity.	
Accel. / Decel. time and working cycle is too short		Increase the setting values for Pr.01-12–01-19 (accel. / decel. time).	
V/F voltage is too high		Adjust the settings for Pr.01-01–01-08 (V/F curve), especially the setting value for the mid-point voltage (if the mid-point voltage is set too small, the load capacity decreases at low-speed).	
Check if the motor rated current matches the motor nameplate		Configure the correct rated current value of the motor again.	
Check if the PT100 is properly set and wired		Check the connection between PT100 thermistor and the heat protection.	
Check if the setting for stall prevention is correct		Set the stall prevention to the proper value.	
Unbalanced three-phase impedance of the motor		Replace the motor.	
Harmonics is too high		Use remedies to reduce harmonics.	

ID No.	Display on LCD Keypad	Warning Name	Description
24	oSL	Over slip warning (oSL)	Over slip warning. By using the maximum slip (Pr.10-29) as the base, when the drive outputs at constant speed, and the F > H or F < H exceeds Pr.07-29 condition and Pr.07-30 setting time, 100% Pr.07-29 = Pr.10-29.

Action and Reset	
Action Condition	When the drive outputs at constant speed, and F > H or F < H exceeds the Pr.07-29 condition
Action Time	Pr.07-30
Warning Setting Parameter	Pr.07-31 = 0 Warning 0: Warn and continue operation 1: Fault and ramp to stop 2: Fault and coast to stop 3: No warning
Reset Method	When Pr.07-31 = 0 and when the drive outputs at constant speed, and F > H or F < H no longer exceeds the Pr.07-29 condition, the oSL warning automatically clears.
Reset Condition	N/A
Record	N/A
Cause	Corrective Actions
Check if the motor parameter is correct	Check the motor parameter.
The load is too large	Decrease the loading.
Check if the settings for Pr.07-29, Pr.07-30 and Pr.10-29 are properly set	Check the parameter settings for oSL protection.

ID No.	Display on LCD Keypad	Warning Name	Description
25	tUn	Auto tuning (tUn)	Parameter auto-tuning is processing. When running auto-tuning, the keypad displays “tUn”.
Action and Reset			
Action Condition		When running Pr.05-00 motor parameter auto-tuning, the keypad displays “tUn”.	
Action Time		N/A	
Warning Setting Parameter		N/A	
Reset Method		When auto-tuning is finished and no error occurs, the warning automatically clears.	
Reset Condition		When auto-tuning is finished and no error occurs.	
Record		N/A	
Cause		Corrective Actions	
The motor parameter is running auto-tuning		When the auto-tuning is finished, the warning automatically clears.	

ID No.	Display on LCD Keypad	Warning Name	Description
28	oPHL	Output phase loss (oPHL)	Output phase loss of the drive

Action and Reset	
Action Condition	Pr.06-47
Action Time	N/A
Warning Setting Parameter	Pr.06-45 0: Warn and continue operation 1: Fault and ramp to stop 2: Fault and coast to stop 3: No warning
Reset Method	If Pr.06-45 is set to 0, the oPHL warning automatically clears after the drive stops.
Reset Condition	N/A
Record	N/A

Cause	Corrective Actions
Unbalanced three-phase impedance of the motor	Replace the motor.
Check if the wiring is incorrect	Check the cable. Replace the cable.
Check if the motor is a single-phase motor	Choose a three-phase motor.
Check if the current sensor is broken	Check if the control board cable is loose. If yes, reconnect the cable and run the drive to test. If the error still occurs, return to the factory for repair. Check if the three-phase current is balanced with a current clamp meter. If the current is balanced and the oPHL error still shows on the display, return to the factory for repair.
Check if capacity of the drive is larger than the motor	Choose a drive's capacity matches a motor's.

ID No.	Display on LCD Keypad	Warning Name	Description
30	SE3	Copy model error 3 (SE3)	Keypad COPY error 3: copy model error
Action and Reset			
Action Condition		“SE3” warning occurs when different drive identity codes are found during copying parameters.	
Action Time		Immediately act when the error is detected	
Warning Setting Parameter		N/A	
Reset Method		Manual reset	
Reset Condition		N/A	
Record		N/A	
Cause		Corrective Actions	
Keypad copy between different power range drives		It is mainly to prevent parameter copies between different HP/models.	

ID No.	Display on LCD Keypad	Warning Name	Description
31	ot3	Over-torque (ot3)	Over-torque 3 warning

Action and Reset	
Action Condition	Pr.14-75
Action Time	Pr.14-76
Warning Setting Parameter	Pr.14-74 Over-torque Detection Selection (Motor 3) = 1 or 3 0: No function 1: Continue operation after over-torque detection during constant speed operation 2: Stop after over-torque detection during constant speed operation 3: Continue operation after over-torque detection during RUN 4: Stop after over-torque detection during RUN
Reset Method	When the output current < Pr.14-75, the Ot3 warning automatically clears
Reset Condition	When the output current < Pr.14-75, the Ot3 warning automatically clears
Record	N/A

Cause	Corrective Actions
Incorrect parameter setting	Configure the settings for Pr.14-75 and Pr.14-76 again.
Mechanical error (e.g. mechanical lock due to over-torque)	Remove the causes of malfunction.
The load is too large	Decrease the loading. Replace with a motor with larger capacity.
Accel. / Decel. time and working cycle is too short	Increase the setting values for Pr.01-12–01-19 (accel./ decel. time)
V/F voltage is too high	Adjust the V/F curve (Motor 3, Pr.01-54–01-61), especially the setting value for the mid-point voltage (if the mid-point voltage is set too small, the load capacity decreases at low-speed).
The motor capacity is too small	Replace with a motor with larger capacity.
Overload during low-speed operation	Decrease the loading during low-speed operation. Increase the motor capacity.
The torque compensation is too large	Adjust the torque compensation value (Pr.07-73 torque compensation gain) until the output current decreases and the motor does not stall.
Improper parameter settings for the speed tracking function (including restart after momentary power loss and restart after fault)	Correct the parameter settings for speed tracking. Start the speed tracking function. Adjust the maximum current for Pr.07-09 speed tracking.

ID No.	Display on LCD Keypad	Warning Name	Description
32	ot4	Over-torque (ot4)	Over-torque 4 warning

Action and Reset	
Action Condition	Pr.14-78
Action Time	Pr.14-79
Warning Setting Parameter	Pr.14-77 Over-torque Detection Selection (Motor 4) = 1 or 3 0: No function 1: Continue operation after over-torque detection during constant speed operation 2: Stop after over-torque detection during constant speed operation 3: Continue operation after over-torque detection during RUN 4: Stop after over-torque detection during RUN
Reset Method	When the output current < Pr.14-78, the Ot4 warning automatically clears
Reset Condition	When the output current < Pr.14-79, the Ot4 warning automatically clears
Record	N/A

Cause	Corrective Actions
Incorrect parameter setting	Configure the settings for Pr.14-78 and Pr.14-79 again.
Mechanical error (e.g. mechanical lock due to over-torque)	Remove the causes of malfunction.
The load is too large	Decrease the loading. Replace with a motor with larger capacity.
Accel. / Decel. time and working cycle is too short	Increase the setting values for Pr.01-12–01-19 (accel./ decel. time)
V/F voltage is too high	Adjust the V/F curve (Motor 4, Pr.01-63–01-70), especially the setting value for the mid-point voltage (if the mid-point voltage is set too small, the load capacity decreases at low-speed).
The motor capacity is too small	Replace with a motor with larger capacity.
Overload during low-speed operation	Decrease the loading during low-speed operation. Increase the motor capacity.
The torque compensation is too large	Adjust the torque compensation value (Pr.07-75 torque compensation gain) until the output current decreases and the motor does not stall.
Improper parameter settings for the speed tracking function (including restart after momentary power loss and restart after fault)	Correct the parameter settings for speed tracking. Start the speed tracking function. Adjust the maximum current for Pr.07-09 speed tracking.

ID No.	Display on LCD Keypad	Warning Name	Description
36	CGdn	CANopen guarding time-out (CGdn)	CANopen guarding time-out 1

Action and Reset	
Action Condition	When CANopen Node Guarding detects that one of the slaves does not respond, the CGdn error displays. The upper unit sets the factor and time during configuration.
Action Time	The time that upper unit sets during configuration
Warning Setting Parameter	N/A
Reset Method	Manual reset
Reset Condition	The upper unit sends a reset package to clear this warning.
Record	N/A
Cause	Corrective Actions
The guarding time is too short, or less detection times	Increase the guarding time (Index 100C) and detection times.
Malfunction caused by interference	1. Verify the wiring and grounding of the communication circuit. It is recommended to separate the communication circuit from the main circuit, or wire in 90 degree for effective anti-interference performance. 2. Make sure the communication circuit is wired in series. 3. Use CANopen cable or add terminating resistance.

ID No.	Display on LCD Keypad	Warning Name	Description
37	CHbn	CANopen heartbeat error (CHbn)	CANopen heartbeat error

Action and Reset	
Action Condition	When CANopen Heartbeat detects that one of the slaves does not response, the CHbn error shows. The upper unit sets the confirming time of producer and consumer during configuration.
Action Time	The upper unit sets the confirming time of producer and consumer during configuration.
Warning Setting Parameter	N/A
Reset Method	Manual reset
Reset Condition	The upper unit sends a reset package to clear this warning.
Record	When Pr.00-21 ≠ 3, CHbn is a “Warning”, and the warning is not recorded.
Cause	Corrective Actions
The heartbeat time is too short	Increase heartbeat time (Index 1016)
Malfunction caused by interference	1. Verify the wiring and grounding of the communication circuit. It is recommended to separate the communication circuit from the main circuit, or wire in 90 degree for effective anti-interference performance. 2. Make sure the communication circuit is wired in series. 3. Use CANopen cable or add terminating resistance.
Communication cable is broken or bad connected	Check or replace the communication cable.

ID No.	Display on LCD Keypad	Warning Name	Description
39	CbFn	CANopen bus off error (CbFn)	CANopen BUS off error

Action and Reset		
Action Condition	Hardware	When CANopen card is not installed, the CbFn warning occurs.
	Software	When the master receives wrong communication package, the CbFn warning occurs. Too much interference on BUS The master receives wrong package when the CAN_H and CAN_L communication cables are short, CbFn warning occurs.
Action Time	Immediately act when the fault is detected	
Warning Setting Parameter	N/A	
Reset Method	Manual Reset	
Reset Condition	Cycle the power	
Record	When Pr.00-21 ≠ 3, CbFn is a “Warning”, and the warning is not recorded.	

Cause	Corrective Actions
Check if the CANopen card is installed	Make sure the CANopen card is installed.
Check if the CANopen speed is correct	Reset CANopen speed (Pr.09-37)
Malfunction caused by interference	1. Verify the wiring and grounding of the communication circuit. It is recommended to separate the communication circuit from the main circuit, or wire in 90 degree for effective anti-interference performance. 2. Make sure the communication circuit is wired in series. 3. Use CANopen cable or add terminating resistance.
Communication cable is broken or bad connected	Check or replace the communication cable.

ID No.	Display on LCD Keypad	Warning Name	Description
40	Cidn	CANopen index error (Cidn)	CANopen index error
Action and Reset			
Action Condition		CANopen communication Index error	
Action Time		Immediately act when the fault is detected	
Warning Setting Parameter		N/A	
Reset Method		Manual Reset	
Reset Condition		The upper unit sends a reset package to clear this warning	
Record		When Pr.00-21 ≠ 3, Cidn is a “Warning”, and the warning is not recorded.	
Cause		Corrective Actions	
Incorrect setting of CANopen index		Reset CANopen index (Pr.00-02 = 7)	

ID No.	Display on LCD Keypad	Warning Name	Description
41	CAdn	CANopen station address error (CAdn)	CANopen station address error (only supports 1–127)
Action and Reset			
Action Condition		CANopen station address error	
Action Time		Immediately act when the fault is detected	
Warning Setting Parameter		N/A	
Reset Method		Manual Reset	
Reset Condition		Pr.00-02 = 7	
Record		When Pr.00-21 ≠ 3, CAdn is a “Warning”, and the warning is not recorded.	
Cause		Corrective Actions	
Incorrect setting of CANopen station address		1. Disable CANopen (Pr.09-36 = 0) 2. Reset CANopen (Pr.00-02 = 7) 3. Reset CANopen station address (Pr.09-36)	

ID No.	Display on LCD Keypad	Warning Name	Description
42	CFrn	CANopen memory error (CFrn)	CANopen memory error

Action and Reset	
Action Condition	When you update the firmware version of the control board, the FRAM internal data does not change, then CFrn warning occurs.
Action Time	Immediately act when the fault is detected
Warning Setting Parameter	N/A
Reset Method	Manual Reset
Reset Condition	Pr.00-02 = 7
Record	When Pr.00-21 ≠ 3, CFrn is a “Warning”, and the warning is not recorded.
Cause	Corrective Actions
CANopen internal memory error	1. Disable CANopen (Pr.09-36 = 0) 2. Reset CANopen (Pr.00-20 = 7) 3. Reset CANopen station address (Pr.09-36)

ID No.	Display on LCD Keypad	Warning Name	Description
43	CSdn	CANopen SDO time-out (CSdn)	SDO transmission time-out (only shows on master station)

Action and Reset	
Action Condition	When the CANopen master transmits a SDO command, and the slave response “times-out”, CSdn warning occurs.
Action Time	Immediately act when the fault is detected
Warning Setting Parameter	N/A
Reset Method	When the master resends a SDO command and receives the response, the warning automatically clears.
Reset Condition	N/A
Record	N/A
Cause	**Corrective Actions**
Slave is not connected	Connect the slave and CANopen BUS.
The synchronous cycle is set too short	Increase the synchronous time (Index 1006)
Malfunction caused by interference	1. Verify the wiring and grounding of the communication circuit. It is recommended to separate the communication circuit from the main circuit, or wire in 90 degree for effective anti-interference performance. 2. Make sure the communication circuit is wired in series. 3. Use CANopen cable or add terminating resistance.
Disconnection or bad connection of the communication cable	Check the status of the cable, or replace the cable.

ID No.	Display on LCD Keypad	Warning Name	Description
44	CSbn	CANopen SDO receives register overflow (CSbn)	CANopen SDO receives register overflow

Action and Reset	
Action Condition	The upper unit sends too much SDO at one time and causes buffer overflow
Action Time	Immediately act when the fault is detected
Warning Setting Parameter	N/A
Reset Method	The upper unit sends a reset package to clear the warning.
Reset Condition	N/A
Record	N/A
Cause	**Corrective Actions**
Too much SDO from the upper unit at one time	Check if the master sends too much SDO command. Make sure the master sends the SDO command according to the command format.

ID No.	Display on LCD Keypad	Warning Name	Description
45	Cbtn	CANopen start-up error warning (Cbtn)	CANopen start-up error warning

Action and Reset	
Action Condition	When the amount of sent error messages reach 255
Action Time	N/A
Warning Setting Parameter	Index 6007
Reset Method	Disable CANopen, and cycle the power after power-off
Reset Condition	N/A
Record	N/A
Cause	Corrective Actions
Serious interference on hardware	Verify if the grounding, terminating resistance and bus line are properly installed.
Incorrect setting for communication speed	Verify the setting for communication speed.
The communication card is not connected, or the card is loose	Make sure the communication card is connected to the drive.

ID No.	Display on LCD Keypad	Warning Name	Description
46	CPtn	CANopen format error (CPtn)	CANopen protocol format error
Action and Reset			
Action Condition		The slave detects that communication data from the upper unit cannot be recognized, and then CPtn warning occurs.	
Action Time		Immediately act when the fault is detected	
Warning Setting Parameter		N/A	
Reset Method		The upper unit sends a reset packet to clear the warning	
Reset Condition		N/A	
Record		N/A	
Cause		Corrective Actions	
The upper unit sends incorrect communication packet		Make sure the master sends the packet based on CANopen DS301 standard command format.	

ID No.	Display on LCD Keypad	Warning Name	Description
50	PLod	PLC opposite defect (PLod)	PLC download error warning
Action and Reset			
Action Condition		During PLC downloading, the program source code detects incorrect address (e.g. the address exceeds the range), then the PLod warning occurs.	
Action Time		Immediately act when the fault is detected	
Warning Setting Parameter		N/A	
Reset Method		Check if the program is correct and download the program again. If the fault does not exist, the warning automatically clears.	
Reset Condition		N/A	
Record		N/A	
Cause		Corrective Actions	
Incorrect data number is found when downloading the PLC program		Use the correct data number.	

ID No.	Display on LCD Keypad	Warning Name	Description
51	PLSv	PLC save memory error (PLSv)	Data error during PLC operation
Action and Reset			
Action Condition		The program detects incorrect written address (e.g. the address exceeds the range) during PLC operation, then the PLSv warning occurs.	
Action Time		Immediately act when the fault is detected.	
Warning Setting Parameter		N/A	
Reset Method		Check if the program is correct and download the program again. If the fault does not exist, the warning automatically clears.	
Reset Condition		N/A	
Record		N/A	
Cause		Corrective Actions	
An incorrect written address is detected during PLC operation		Make sure the written address is correct and download the program again.	

ID No.	Display on LCD Keypad	Warning Name	Description
52	PLdA	Data defect (PLdA)	Data error during PLC operation

Action and Reset	
Action Condition	The program detects incorrect written address when translating the program source code (e.g. the address exceeds the range) during PLC downloading, then PLdA warning occurs.
Action Time	Immediately act when the fault is detected.
Warning Setting Parameter	N/A
Reset Method	Check if the program is correct and download the program again. If the fault does not exist, the warning automatically clears.
Reset Condition	N/A
Record	N/A
Cause	**Corrective Actions**
During PLC operation, the external Modbus has written / read incorrect data to internal PLC program	Check if the upper unit transmits the correct command.
The built-in PLC function is ON, there is station address of Modbus which is duplicate of the built-in PLC station address (Pr.09-35) been set in the Modbus system of the equipment	Set the station addresses of Modbus and built-in PLC to be different.

ID No.	Display on LCD Keypad	Warning Name	Description
53	PLFn	Function defect (PLFn)	PLC download function code error
Action and Reset			
Action Condition		The program detects incorrect command (unsupported command) during PLC downloading, then PLFn warning occurs.	
Action Time		Immediately act when the fault is detected	
Warning Setting Parameter		N/A	
Reset Method		Check if the program is correct and download the program again. If the fault does not exist, the warning automatically clears.	
Reset Condition		N/A	
Record		N/A	
Cause		Corrective Actions	
Unsupported command has used while downloading the program		Check if the firmware of the drive is the old version. If yes, please contact Delta.	

ID No.	Display on LCD Keypad	Warning Name	Description
54	PLor	PLC buffer overflow (PLor)	PLC register overflow

Action and Reset	
Action Condition	When PLC runs the last command and the command exceeds the maximum capacity of the program, then PLor warning occurs.
Action Time	Immediately act when the fault is detected
Warning Setting Parameter	N/A
Reset Method	Check if the program is correct and download the program again. If the fault does not exist, the warning automatically clears.
Reset Condition	N/A
Record	N/A
Cause	**Corrective Actions**
The program detects internal source code error during PLC operation	1. Disable PLC 2. Reset the PLC program (Pr.00-02 = 6) 3. Enable PLC 4. Re-download the PLC program

ID No.	Display on LCD Keypad	Warning Name	Description
55	PLFF	Function defect (PLFF)	Function code error during PLC operation
Action and Reset			
Action Condition		The program detects incorrect command (unsupported command) during PLC operation, then PLFF warning occurs.	
Action Time		Immediately act when the fault is detected	
Warning Setting Parameter		NA	
Reset Method		Check if the program is correct and download the program again. If the fault does not exist, the warning automatically clears.	
Reset Condition		N/A	
Record		N/A	
Cause		Corrective Actions	
The PLC runs an incorrect command during operation		When starting the PLC function and there is no program in the PLC, the PLFF warning occurs. This is a normal warning, please download the program.	

ID No.	Display on LCD Keypad	Warning Name	Description
56	PLSn	Checksum error (PLSn)	PLC checksum error

Action and Reset	
Action Condition	PLC checksum error is detected after the drive is powered on, then PLSn warning occurs.
Action Time	Immediately act when the fault is detected
Warning Setting Parameter	NA
Reset Method	Check if the program is correct and download the program again. If the fault does not exist, the warning automatically clears.
Reset Condition	N/A
Record	N/A
Cause	Corrective Actions
The program detects checksum error during PLC operation	1. Disable PLC 2. Reset the PLC program (Pr.00-02 = 6) 3. Enable PLC 4. Re-download the PLC program

ID No.	Display on LCD Keypad	Warning Name	Description
57	PLEd	No end command (PLEd)	PLC end command is missing

Action and Reset	
Action Condition	The “End” command is missing until the last command is executed, the PLEd warning occurs.
Action Time	Immediately act when the fault is detected
Warning Setting Parameter	NA
Reset Method	Check if the program is correct and download the program again. If the fault does not exist, the warning automatically clears.
Reset Condition	N/A
Record	N/A
Cause	Corrective Actions
There is no “END” command during PLC operation	1. Disable PLC 2. Reset the PLC program (Pr.00-02 = 6) 3. Enable PLC 4. Re-download the PLC program

ID No.	Display on LCD Keypad	Warning Name	Description
58	PLCr	PLC MCR error (PLCr)	PLC MCR command error

Action and Reset	
Action Condition	The MC command is detected during PLC operation, but there is no corresponding MCR command, then the PLCr warning occurs.
Action Time	Immediately act when the fault is detected
Warning Setting Parameter	NA
Reset Method	Check if the program is correct and download the program again. If the fault does not exist, the warning automatically clears.
Reset Condition	N/A
Record	N/A
Cause	Corrective Actions
The MC command is continuously used for more than 9 times	The MC command cannot be used continuously for 9 times. Check and reset the program, then re-download the program.

ID No.	Display on LCD Keypad	Warning Name	Description
59	PLdF	PLC download fail (PLdF)	PLC download failure
Action and Reset			
Action Condition		PLC download failure due to momentary power loss during the downloading. After the power is ON again, the PLdF warning occurs.	
Action Time		Immediately act when the fault is detected	
Warning Setting Parameter		NA	
Reset Method		Check if the program is correct and download the program again. If the fault does not exist, the warning automatically clears.	
Reset Condition		N/A	
Record		N/A	
Cause		Corrective Actions	
PLC download is forced to stop, so the written program is incomplete		Check if there is any error in the program and re-download the PLC program.	

ID No.	Display on LCD Keypad	Warning Name	Description
60	PLSF	PLC scan time fail (PLSF)	PLC scan time exceeds the maximum allowable time
Action and Reset			
Action Condition		When the PLC scan time exceeds the maximum allowable time (400 ms), the PLSF warning occurs.	
Action Time		Immediately act when the fault is detected	
Warning Setting Parameter		NA	
Reset Method		Check if the program is correct and download the program again. If the fault does not exist, the warning automatically clears.	
Reset Condition		N/A	
Record		N/A	
Cause		Corrective Actions	
The PLC scan time exceeds the maximum allowable time (400 ms)		Check if the source code is correct and re-download the program.	

ID No.	Display on LCD Keypad	Warning Name	Description
70	ECid	ExCom ID fail (ECid)	Duplicate MAC ID error Node address setting error
Action and Reset			
Action Condition		Duplicate setting of MAC ID Node address setting error	
Action Time		N/A	
Warning Setting Parameter		N/A	
Reset Method		Correct the setting and cycle the power	
Reset Condition		N/A	
Record		N/A	
Cause		Corrective Actions	
The setting address exceeds the range (0–63)		Check the address setting of the communication card (Pr.09-70).	
The speed setting exceeds the range		Standard: 0–2; non-standard: 0–7	
The address is duplicated with other nodes on the BUS		Reset the address.	

ID No.	Display on LCD Keypad	Warning Name	Description
71	ECLv	ExCom power loss (ECLv)	Low voltage of the communication card

Action and Reset	
Action Condition	The 5V power that the drive provides to the communication card is too low
Action Time	Immediately act
Warning Setting Parameter	N/A
Reset Method	Cycle the power
Reset Condition	N/A
Record	N/A
Cause	**Corrective Actions**
The 5V power that the drive provides to the communication card is too low	1. Use the same communication card for other MS300 drives to check if the ECLv warning still occurs. If yes, replace with a new communication card; if not, replace the drive. 2. Use another communication card to test if the ECLv warning still occurs on the same drive. If not, replace the card; if yes, replace the drive.
The card is loose	Make sure the communication card is well inserted.

ID No.	Display on LCD Keypad	Warning Name	Description
72	ECtt	ExCom test mode (ECtt)	The communication card is in the test mode
Action and Reset			
Action Condition		The communication card is in the test mode	
Action Time		Immediately act	
Warning Setting Parameter		N/A	
Reset Method		Cycle the power and enter the normal mode	
Reset Condition		N/A	
Record		N/A	
Cause		Corrective Actions	
Communication command error		Cycle the power	

ID No.	Display on LCD Keypad	Warning Name	Description
73	ECbF	ExCom Bus off (ECbF)	The communication card detects too many errors in the BUS, then enters the BUS-OFF status and stop communicating.
Action and Reset			
Action Condition		When the drive detects BUS-off (for DeviceNet)	
Action Time		Immediately act	
Warning Setting Parameter		N/A	
Reset Method		Cycle the power	
Reset Condition		N/A	
Record		N/A	
Cause		Corrective Actions	
Poor connection of the cable		Re-connect the cable	
Bad quality of the cable		Replace the cable	

ID No.	Display on LCD Keypad	Warning Name	Description
74	ECnP	ExCom no power (ECnP)	There is no power supply of the DeviceNet
Action and Reset			
Action Condition	When there is no power supply of the DeviceNet		
Action Time	Immediately act		
Warning Setting Parameter	N/A		
Reset Method	Cycle the power		
Reset Condition	N/A		
Record	N/A		
Cause	Corrective Actions		
The drive detects that DeviceNet has no power	Check if the cable and power is normal. If yes, return to the factory for repair.		

ID No.	Display on LCD Keypad	Warning Name	Description
75	ECFF	ExCom factory defect (ECFF)	Factory default setting error

Action and Reset	
Action Condition	Factory default setting error
Action Time	Immediately act
Warning Setting Parameter	N/A
Reset Method	Cycle the power
Reset Condition	N/A
Record	N/A
Cause	Corrective Actions
Factory default setting error	Use DCISoft to reset to the default value.

ID No.	Display on LCD Keypad	Warning Name	Description
76	ECiF	ExCom inner error (ECiF)	Serious internal error

Action and Reset	
Action Condition	Internal memory saving error
Action Time	Immediately act
Warning Setting Parameter	N/A
Reset Method	Cycle the power
Reset Condition	N/A
Record	N/A
Cause	Corrective Actions
Noise interference	Verify the wiring of the control circuit, and the wiring/grounding of the main circuit to prevent interference. Cycle the power.
The memory is broken	Reset to the default value and check if the error still exists. If yes, replace the communication card.

ID No.	Display on LCD Keypad	Warning Name	Description
78	ECPP	ExCom Parameter data error (ECPP)	Profibus parameter data error
Action and Reset			
Action Condition		N/A	
Action Time		N/A	
Warning Setting Parameter		N/A	
Reset Method		Manual reset	
Reset Condition		Immediately reset	
Record		N/A	
Cause		Corrective Actions	
Incorrect GSD file		Get the correct GSD file from the software	

ID No.	Display on LCD Keypad	Warning Name	Description
79	ECPi	ExCom configuration data error (ECPi)	Profibus configuration data error
Action and Reset			
Action Condition		N/A	
Action time		N/A	
Warning setting parameter		N/A	
Reset method		Manual reset	
Reset condition		Immediately reset	
Record		N/A	
Cause		Corrective Actions	
Incorrect GSD file		Get the correct GSD file from the software	

ID No.	Display on LCD Keypad	Warning Name	Description
80	ECEF	Ethernet link fail (ECEF)	The Ethernet cable is not connected

Action and Reset	
Action Condition	Hardware detection
Action Time	Immediately act
Warning Setting Parameter	N/A
Reset Method	Manual reset
Reset Condition	N/A
Record	N/A
Cause	Corrective Actions
The Ethernet cable is loose	Re-connect the cable
Bad quality of the Ethernet cable	Replace the cable

ID No.	Display on LCD Keypad	Warning Name	Description
81	ECto	Communication time-out (ECto)	Communication time-out for the communication card and the upper unit

Action and Reset	
Action Condition	N/A
Action Time	N/A
Warning Setting Parameter	N/A
Reset Method	N/A
Reset Condition	CMC-EC01: auto-resets when the communication with the upper unit is back to normal
Record	N/A
Cause	**Corrective Actions**
Communication card is not connected with the upper unit	Check if the connection of the communication cable is correct
Communication error of the upper unit	Check if the communication of the upper unit is normal

ID No.	Display on LCD Keypad	Warning Name	Description
82	ECCS	Checksum error (ECCS)	Checksum error for the communication card and the drive
Action and Reset			
Action Condition		Software detection	
Action Time		N/A	
Warning Setting Parameter		N/A	
Reset Method		Manual reset	
Reset Condition		Immediately reset	
Record		N/A	
Cause		Corrective Actions	
Noise interference		Verify the wiring of the control circuit, and the wiring/grounding of the main circuit to prevent interference.	

ID No.	Display on LCD Keypad	Warning Name	Description
83	ECrF	Return defect (ECrF)	Communication card returns to the default setting
Action and Reset			
Action Condition		Communication card returns to the default setting	
Action Time		N/A	
Warning Setting Parameter		N/A	
Reset Method		Manual reset	
Reset Condition		Immediately reset	
Record		N/A	
Cause		Corrective Actions	
Communication card is returning to default setting		No actions required.	

ID No.	Display on LCD Keypad	Warning Name	Description
84	ECo0	Modbus TCP over (ECo0)	Modbus TCP exceeds the maximum communication value

Action and Reset	
Action Condition	Hardware detection
Action Time	Immediately act
Warning Setting Parameter	N/A
Reset Method	Manual reset
Reset Condition	Immediately reset
Record	N/A

Cause	Corrective Actions
The Master communication value exceeds the allowable number of the communication cards.	Decrease the Master communication value.
Connection occupied due to not disconnecting the Modbus TPC while the upper unit is connected without communicating.	Revise the program of the upper unit to disconnect the connection while the communication is not used for a long time.
A new Modbus TCP connection is built whenever the upper unit is connected to the communication card, which causes connection occupied.	Revise the program of the upper unit to use the same Modbus TCP connection when connecting to the same communication card.

ID No.	Display on LCD Keypad	Warning Name	Description
85	ECo1	EtherNet/IP over (ECo1)	Ethernet/IP exceeds the maximum communication value

Action and Reset	
Action Condition	Hardware detection
Action Time	Immediately act
Warning Setting Parameter	N/A
Reset Method	Manual reset
Reset Condition	Immediately reset
Record	N/A

Cause	Corrective Actions
The Master communication value exceeds the allowable number of the communication cards.	Decrease the Master communication value
Connection occupied due to not disconnecting the Modbus TPC while the upper unit is connected without communicating.	Revise the program of the upper unit to disconnect the connection while the communication is not used for a long time.
A new Modbus TCP connection is built whenever the upper unit is connected to the communication card, which causes connection occupied.	Revise the program of the upper unit to use the same Modbus TCP connection when connecting to the same communication card.

ID No.	Display on LCD Keypad	Warning Name	Description
86	ECiP	IP fail (ECiP)	IP setting error
Action and Reset			
Action Condition		Software detection	
Action Time		Immediately act	
Warning Setting Parameter		N/A	
Reset Method		Manual reset	
Reset Condition		Immediately reset	
Record		N/A	
Cause		Corrective Actions	
IP conflict		Reset IP.	
DHCP IP configuration error		Contact MIS to check if DHCP Server works normally.	

ID No.	Display on LCD Keypad	Warning Name	Description
87	EC3F	Mail fail (EC3F)	Mail warning: Alarm mail is sent when the condition that the alarm set for the communication card was met.

Action and Reset	
Action Condition	When the condition that the alarm set for the communication card was met
Action Time	Immediately act
Warning Setting Parameter	N/A
Reset Method	Manual reset
Reset Condition	Immediately reset
Record	N/A
Cause	Corrective Actions
Communication card establishes alarm conditions	No actions required

ID No.	Display on LCD Keypad	Warning Name	Description
88	ECbY	ExCom busy (ECbY)	Communication card busy: too many packets are received
Action and Reset			
Action Condition		Software detection	
Action Time		N/A	
Warning Setting Parameter		N/A	
Reset Method		Manual reset	
Reset Condition		N/A	
Record		N/A	
Cause		Corrective Actions	
Too many communication packets for the communication card to process		Decrease communication packets	

ID No.	Display on LCD Keypad	Warning Name	Description
89	ECCb	ExCom card break (ECCb)	Communication card break off warning
Action and Reset			
Action Condition		Communication card break off	
Action Time		N/A	
Warning Setting Parameter		N/A	
Reset Method		Auto-resets after the communication card is re-installed	
Reset Condition		Immediately reset	
Record		N/A	
Cause		Corrective Actions	
Communication card is loose		Re-install the communication card.	

ID No.	Display on LCD Keypad	Warning Name	Description
90	CPLP	Copy PLC: password error (CPLP)	Copy PLC password error. When KPMS-LE01 is processing PLC copy and the PLC password is incorrect, the CPLP warning occurs.
Action and Reset			
Action Condition		PLC password is incorrect	
Action Time		Immediately act	
Warning Setting Parameter		N/A	
Reset Method		Manual reset	
Reset Condition		Directly reset	
Record		N/A	
Cause		Corrective Actions	
PLC password is incorrect		Reset and enter the correct PLC password.	

ID No.	Display on LCD Keypad	Warning Name	Description
91	CPL0	Copy PLC: Read mode error (CPL0)	Copy PLC read mode error

Action and Reset	
Action Condition	Incorrect process when copying the PLC read mode
Action Time	Immediately act
Warning Setting Parameter	N/A
Reset Method	Manual reset
Reset Condition	Directly reset
Record	N/A
Cause	Corrective Actions
Using incorrect process to copy the PLC read mode.	Cycle the power and copy the PLC read mode again.

ID No.	Display on LCD Keypad	Warning Name	Description
92	CPL 1	Copy PLC: Write mode (CPL1)	Copy PLC write mode error
Action and Reset			
Action Condition		Incorrect process when copying the PLC write mode	
Action Time		Immediately act	
Warning Setting Parameter		N/A	
Reset Method		Manual reset	
Reset Condition		Directly reset	
Record		N/A	
Cause		Corrective Actions	
Using incorrect process to copy the PLC write mode.		Cycle the power and copy the PLC write mode again.	

ID No.	Display on LCD Keypad	Warning Name	Description
93	CPLv	Copy PLC: version error (CPLv)	Copy PLC version error. When a non-MS300 built-in PLC is copied to the MS300 drive, the CPLv warning occurs.

Action and Reset	
Action Condition	Software detection
Action Time	Immediately act
Warning Setting Parameter	N/A
Reset Method	Manual reset
Reset Condition	Directly reset
Record	N/A
Cause	**Corrective Actions**
A non-MS300 PLC program is copied to MS300	Check if the copied PLC program is for MS300. Use the correct MS300 PLC program.

ID No.	Display on LCD Keypad	Warning Name	Description
94	CPLS	Copy PLC: size error (CPLS)	Copy PLC capacity error

Action and Reset	
Action Condition	Software detection
Action Time	Immediately act
Warning Setting Parameter	N/A
Reset Method	Manual reset
Reset Condition	Directly reset
Record	N/A

Cause	Corrective Actions
The PLC program copied to MS300 exceeds the allowable capacity	Check if the copied PLC program is for MS300 Use the correct capacity for the MS300 PLC program

ID No.	Display on LCD Keypad	Warning Name	Description
95	CPLF	Copy PLC: PLC function (CPLF)	KPMS-LE01 Copy PLC function must be executed when PLC is disabled.
Action and Reset			
Action Condition		Software detection	
Action Time		Immediately act	
Warning Setting Parameter		N/A	
Reset Method		Manual reset	
Reset Condition		Directly reset	
Record		N/A	
Cause		Corrective Actions	
PLC function is enabled when KPMS-LE01 is running PLC copy		Disable the PLC function first, and then run the PLC copy function again.	

ID No.	Display on LCD Keypad	Warning Name	Description
96	CPLt	Copy PLC: time-out (CPLt)	Copy PLC time-out
Action and Reset			
Action Condition		Software detection	
Action Time		Immediately act	
Warning Setting Parameter		N/A	
Reset Method		Manual reset	
Reset Condition		Directly reset	
Record		N/A	
Cause		Corrective Actions	
KPMS-LE01 is removed while copying the PLC program		The KPMS-LE01 cannot be removed during the PLC copy process	

Chapter 14 Fault Codes

Summary of Fault Codes

ID No.	Fault Name	ID No.	Fault Name
0	No fault record	43	PG feedback loss (PGF2)
1	Over-current during acceleration (ocA)	44	PG feedback stall (PGF3)
2	Over-current during deceleration (ocd)	45	PG slip error (PGF4)
3	Over-current during steady operation (ocn)	48	ACI loss (ACE)
4	Ground fault (GFF)	49	External fault (EF)
6	Over-current at stop (ocS)	50	Emergency stop (EF1)
7	Over-voltage during acceleration (ovA)	51	External base block (bb)
8	Over-voltage during deceleration (ovd)	52	Password is locked (Pcod)
9	Over-voltage at constant speed (ovn)	54	Illegal command (CE1)
10	Over-voltage at stop (ovS)	55	Illegal data address (CE2)
11	Low-voltage during acceleration (LvA)	56	Illegal data value (CE3)
12	Low-voltage during deceleration (Lvd)	57	Data is written to read-only address (CE4)
13	Low-voltage at constant speed (Lvn)	58	Modbus transmission time-out (CE10)
14	Low-voltage at stop (LvS)	61	Y-connection / Δ-connection switch fault (ydc)
15	Phase loss protection (OrP)	62	Deceleration energy backup fault (dEb)
16	IGBT overheating (oH1)	63	Over slip error (oSL)
18	IGBT temperature detection failure (tH1o)	72	STO loss 1 (STL1)
21	Over load (oL)	76	STO (STO)
22	Electronic thermal relay 1 protection (EoL1)	77	STO loss 2 (STL2)
23	Electric thermal relay 2 protection (EoL2)	78	STO loss 3 (STL3)
24	Motor overheating (oH3) PTC / PT100	79	U-phase over-current before run (Aoc)
26	Over torque 1 (ot1)	80	V-phase over-current before run (boc)
27	Over torque 2 (ot2)	81	W-phase over-current before run (coc)
28	Under current (uC)	82	Output phase loss U phase (OPHL)
31	EEPROM read error (cF2)	83	Output phase loss V phase (OPHL)
33	U-phase error (cd1)	84	Output phase loss W phase (OPHL)
34	V-phase error (cd2)	87	Overload protection at low frequency (oL3)
35	W-phase error (cd3)	89	Rotor position detection error (RoPd)
36	cc hardware failure (Hd0)	101	CANopen guarding fault (CGdE)
37	oc hardware error (Hd1)	102	CANopen heartbeat fault (CHbE)
40	Auto-tuning error (AUE)	104	CANopen bus off fault (CbFE)
41	PID loss ACI (AFE)	105	CANopen index error (CIdE)

ID No.	Fault Name	ID No.	Fault Name
106	CANopen station address error (CAdE)	134	Internal communicatino error (EoL3)
107	CANopen memory error (CFrE)	135	Internal communication error (EoL4)
121	Internal communication error (CP20)	140	oc hardware error (Hd6)
123	Internal communication error (CP22)	141	GFF occurs before run (b4GFF)
124	Internal communication error (CP30)	142	Auto-tune error 1 (AuE1)
126	Internal communication error (CP32)	143	Auto-tune error 2 (AuE2)
127	Internal communicatino error (CP33)	144	Auto-tune error 3 (AuE3)
128	Over-torque 3 (ot3)	149	Auto-tune error 5 (AuE5)
129	Over-torque 4 (ot4)		

Digital Keypad KPMS-LE01

- Refer to setting of Pr.06-17–Pr.06-22 and Pr.14-70–14-73.

ID	Display on LCD Keypad	Fault Name	Fault Descriptions
1	ocA	Over-current during acceleration (ocA)	Output current exceeds three times of the rated current during acceleration. When ocA occurs, the drive closes the gate of the output immediately, the motor runs freely, and the display shows an ocA error.
Action and Reset			
Action Condition		300% of the rated current	
Action Time		Immediately act	
Fault Treatment Parameter		N/A	
Reset Method		Manual reset	
Reset Condition		Reset in five seconds after the fault is cleared	
Record		Yes	
Cause		Corrective Actions	
Acceleration time is too short		1. Increase the acceleration time 2. Increase the acceleration time of S-curve 3. Set auto-acceleration and auto-deceleration parameter (Pr.01-44) 4. Set over-current stall prevention function (Pr.06-03) 5. Replace the drive with a larger capacity model.	
Short circuit at motor output due to poor insulation wiring		Check the motor cable and remove causes of the short circuits, or replace the cable before turning on the power.	
Check for possible burnout or aging insulation of the motor		Check the motor insulation value with megger. Replace the motor if the insulation is poor.	
The load is too large.		Check if the output current during the whole working process exceeds the AC motor drive's rated current. If yes, replace the AC motor drive with a larger capacity model.	
Impulsive change of the load		Reduce the load or increase the capacity of AC motor drive.	
Use special motor or motor with larger capacity than the drive		Check the motor capacity (the rated current on the motor's nameplate should ≤ the rated current of the drive)	
Use ON/OFF controller of an electromagnetic contactor at the output (U/V/W) of the drive		Check the action timing of the contactor and make sure it is not turned ON/OFF when the drive outputs the voltage.	
V/F curve setting error		Adjust the V/F curve setting and frequency/voltage. When the fault occurs, and the frequency voltage is too high, reduce the voltage.	
Torque compensation is too large		Adjust the torque compensation (refer to Pr.07-26 torque compensation gain) until the output current reduces and the motor does not stall.	

Cause	Corrective Actions
Malfunction caused by interference	Verify the wiring of the control circuit and the wiring / grounding of the main circuit to prevent interference.
The motor starts when in free run	Enable the speed tracking during start-up of Pr.07-12.
Improper parameter settings for the speed tracking function (including restart after momentary power loss and restart after fault)	Correct the parameter settings for speed tracking. 1. Start the speed tracking function. 2. Adjust the maximum current for Pr.07-09 speed tracking.
Incorrect combination of control mode and used motor	Check the settings for Pr.00-11 control mode: 1. For IM, Pr.00-11 = 0, 1, 2, 3, 5 2. For PM, Pr.00-11 = 4, 6, or 7
The length of motor cable is too long	Increase the AC motor drive's capacity. Install AC reactor(s) on the output side (U/V/W).
Hardware failure	The ocA occurs due to the short circuit or ground fault at the output side of the drive. Check for possible short circuits between terminals with the electric meter: B1 corresponds to U, V and W; DC- corresponds to U, V and W; ⏚ corresponds to U, V and W. If short circuit occurs, return to the factory for repair.
Check if the setting for stall prevention is correct	Set the stall prevention to the proper value.

ID	Display on LCD Keypad	Fault Name	Fault Descriptions
2	ocd	Over-current during deceleration (ocd)	Output current exceeds three times of the rated current during deceleration. When ocd occurs, the drive closes the gate of the output immediately, the motor runs freely, and the display shows an ocd error.

Action and Reset	
Action Condition	300% of the rated current
Action Time	Immediately act
Fault Treatment Parameter	N/A
Reset Method	Manual reset
Reset Condition	Reset in five seconds after the fault is cleared
Record	Yes

Cause	Corrective Actions
Deceleration time too short	1. Increase the deceleration time 2. Increase the deceleration time of S-curve 3. Set auto-acceleration and auto-deceleration parameter (Pr.01-44) 4. Set over-current stall prevention function (Pr.06-03) 5. Replace the drive with a larger capacity model
Check if the mechanical brake of the motor activates too early	Check the action timing of the mechanical brake.
Short-circuit at motor output due to poor insulation wiring	Check the motor cable and remove causes of the short circuits, or replace the cable before turning on the power.
Check for possible burnout or aging insulation of the motor	Check the motor insulation value with megger. Replace the motor if the insulation is poor.
The load is too large	Check if the output current during the whole working process exceeds the AC motor drive's rated current. If yes, replace the AC motor drive with a larger capacity model.
Impulsive change of the load	Reduce the load or increase the capacity of AC motor drive.
Use special motor or motor with larger capacity than the drive	Check the motor capacity (the rated current on the motor's nameplate should ≤ the rated current of the drive).
Use ON/OFF controller of an electromagnetic contactor at the output (U/V/W) of the drive	Check the action timing of the contactor and make sure it is not turned ON/OFF when the drive outputs the voltage.
V/F curve setting error	Adjust the V/F curve settings and frequency/voltage. When the fault occurs, and the frequency voltage is too high, reduce the voltage.
Torque compensation is too large	Adjust the torque compensation (refer to Pr.07-26 torque compensation gain) until the output current reduces and the motor does not stall.
Malfunction caused by interference	Verify the wiring of the control circuit and the wiring/grounding of the main circuit to prevent interference.
The length of motor cable is too long	Increase the AC motor drive's capacity Install AC reactor(s) on the output side (U/V/W)
Hardware error	The ocd occurs due to the short circuit or ground fault at the output side of the drive. Check for possible short circuits between terminals with the electric meter: B1 corresponds to U, V and W; DC- corresponds to U, V and W; ⏚ corresponds to U, V and W. If short circuits occurs, return to the factory for repair.

Cause	Corrective Actions
Check if the setting of stall prevention is correct	Set the stall prevention to the proper value.

ID	Display on LCD Keypad	Fault Name	Fault Descriptions
3	ocn	Over-current during steady operation (ocn)	Output current exceeds three times of the rated current during constant speed. When ocn occurs, the drive closes the gate of the output immediately, the motor runs freely, and the display shows an ocn error.

Action and Reset	
Action Condition	300% of the rated current
Action Time	Immediately act
Fault Treatment Parameter	N/A
Reset Method	Manual reset
Reset Condition	Reset in five seconds after the fault is cleared
Record	Yes

Cause	Corrective Actions
Short-circuit at motor output due to poor insulation wiring	Check the motor cable and remove causes of the short circuits, or replace the cable before turning on the power.
Check for possible shaft lock, burnout or aging insulation of the motor	Troubleshoot the motor shaft lock. Check the motor insulation value with megger. Replace the motor if the insulation is poor.
Impulsive change of the load	Reduce the load or increase the capacity of AC motor drive.
Use special motor or motor with larger capacity than the drive	Check motor capacity (the rated current on the motor's nameplate should ≤ the rated current of the drive)
Use ON/OFF controller of an electromagnetic contactor at the output (U/V/W) of the drive	Check the action timing of the contactor and make sure it is not turned ON/OFF when the drive outputs the voltage.
V/F curve setting error	Adjust the V/F curve settings and frequency/voltage. When the fault occurs, and the frequency voltage is too high, reduce the voltage.
Torque compensation is too large.	Adjust the torque compensation (refer to Pr.07-26 torque compensation gain) until the output current reduces and the motor does not stall.
Malfunction caused by interference	Verify the wiring of the control circuit and the wiring/grounding of the main circuit to prevent interference.
The length of motor cable is too long	Increase the AC motor drive's capacity. Install AC reactor(s) on the output side (U/V/W).
Hardware failure	The ocn occurs due to the short circuit or ground fault at the output side of the drive. Check for possible short circuit between terminals with the electric meter: B1 corresponds to U, V and W; DC- corresponds to U, V, and W; ⏚ corresponds to U, V, and W. If short circuits occurs, return to the factory for repair.

ID	Display on LCD Keypad	Fault Name	Fault Descriptions
4	GFF	Ground fault (GFF)	When the drive detects grounding short circuit on the output terminals (U/V/W), the drive closes the gate of the output immediately, the motor runs freely, and the display shows a GFF error.

Action and Reset	
Action Condition	N/A
Action Time	N/A
Fault Treatment Parameter	N/A
Reset Method	Manual reset
Reset Condition	Reset in five seconds after the fault is cleared
Record	Yes

Cause	Corrective Actions
Motor burnout or aging insulation occurred	Check the motor insulation value with megger. Replace the motor if the insulation is poor.
Short circuit due to broken cable	Troubleshoot the short circuit. Replace the cable.
Larger stray capacitance of the cable and terminal ⏚	If the motor cable length exceeds 100 m, decrease the setting value for the carrier frequency. Take remedies to reduce stray capacitance.
Malfunction caused by interference	Verify the grounding and wiring of the communication circuit. It is recommended to separate the communication circuit from the main circuit, or wire in 90 degree for effective anti-interference performance.
Hardware failure	Cycle the power after checking the status of motor, cable and cable length. If GFF still exists, return to the factory for repair.
Over-current at constant speed	Refer to the corrective actions for ocn.
Over-current during acceleration	Refer to the corrective actions for ocA.
Over-current during deceleration	Refer to the corrective actions for ocd.

ID	Display on LCD Keypad	Fault Name	Fault Descriptions
6	ocS	Over-current at stop (ocS)	Over-current or hardware failure in current detection at stop. Cycle the power after ocS occurs. If the hardware failure occurs, the display shows cd1, cd2 or cd3.
Action and Reset			
Action Condition		300% of the rated current	
Action Time		Immediately act	
Fault Treatment Parameter		N/A	
Reset Method		Manual reset	
Reset Condition		Reset in five seconds after the fault is cleared	
Record		Yes	
Cause		Corrective Actions	
Malfunction caused by interference		Verify the wiring of the control circuit and the wiring/grounding of the main circuit to prevent interference.	
Hardware failure		Check if other error codes such as cd1–cd3 occur after cycling the power. If yes, return to the factory for repair.	

ID	Display on LCD Keypad	Fault Name	Fault Descriptions
7	ovA	Over-voltage during acceleration (ovA)	DC bus over-voltage during acceleration. When ovA occurs, the drive closes the gate of the output, the motor runs freely, and the display shows an ovA error.
Action and Reset			
Action Condition		230V models: 410 V_{DC} 460V models: 820 V_{DC} 575V models: 1116 V_{DC}	
Action Time		Immediately act when the DC bus voltage is higher than the level	
Fault Treatment Parameter		N/A	
Reset Method		Manual reset	
Reset Condition		Reset only when the DC bus voltage is lower than 90% of the over-voltage level	
Record		Yes	
Cause		Corrective Actions	
Acceleration is too slow (e.g. hen lifting load decreases acceleration time)		Decrease the acceleration time. Use a braking unit or DC bus. Replace the drive with a larger capacity model.	
The setting for stall prevention level is smaller than no-load current		The setting for the stall prevention level should be larger than no-load current.	
Power voltage is too high		Check if the input voltage is within the rated AC motor drive input voltage range, and check for possible voltage spikes.	
ON/OFF switch action of phase-in capacitor in the same power system		If the phase-in capacitor or active power supply unit acts in the same power system, the input voltage may surge abnormally in a short time. In this case, install an AC reactor.	
Regenerative voltage of motor inertia		Use over-voltage stall prevention function (Pr.06-01). Use auto-acceleration and auto-deceleration setting (Pr.01-44). Use a braking unit or DC bus.	
Acceleration time is too short		Check if the over-voltage warning occurs after acceleration stops. When the warning occurs, do the following: 1. Increase the acceleration time. 2. Set Pr.06-01 over-voltage stall prevention. 3. Increase the setting value for Pr.01-25 S-curve acceleration arrival time 2.	
Motor ground fault		The ground short circuit current charges the capacitor in the main circuit through the power. Check if there is ground fault on the motor cable, wiring box and its internal terminals. Troubleshoot the ground fault.	
Incorrect wiring of brake resistor or brake unit		Check the wiring of the brake resistor and braking unit.	
Malfunction caused by interference		Verify the wiring of the control circuit and the wiring/grounding of the main circuit to prevent interference.	

ID	Display on LCD Keypad	Fault Name	Fault Descriptions
8	ovd	Over-voltage during deceleration (ovd)	DC bus over-voltage during deceleration. When ovd occurs, the drive closes the gate of the output immediately, the motor runs freely, and the display shows an ovd error.
Action and Reset			
Action Condition		230V models: 410 V_{DC} 460V models: 820 V_{DC} 575V models: 1116 V_{DC}	
Action Time		Immediately act when the DC bus voltage is higher than the level	
Fault Treatment Parameter		N/A	
Reset Method		Manual reset	
Reset Condition		Reset only when the DC bus voltage is lower than 90% of the over-voltage level	
Record		Yes	
Cause		Corrective Actions	
Deceleration time is too short, causing too large regenerative energy of the load.		1. Increase the setting value of Pr.01-13, Pr.01-15, Pr.01-17 and Pr.01-19 (deceleration time). 2. Connect the brake resistor, braking unit or DC bus on the drive. 3. Reduce the brake frequency. 4. Replace the drive with a larger capacity model. 5. Use S-curve acceleration/deceleration. 6. Use over-voltage stall prevention (Pr.06-01). 7. Use auto-acceleration and auto-deceleration (Pr.01-44). 8. Adjust the braking level (Pr.07-01 or the bolt position of the brake unit).	
The setting for stall prevention level is smaller than no-load current.		The setting for the stall prevention level should be larger than no-load current	
Power voltage is too high		Check if the input voltage is within the rated AC motor drive input voltage range, and check for possible voltage spikes.	
ON/OFF switch action of phase-in capacitor in the same power system.		If the phase-in capacitor or active power supply unit acts in the same power system, the input voltage may surge abnormally in a short time. In this case, install an AC reactor.	
Motor ground fault.		The ground short circuit current charges the capacitor in the main circuit through the power. Check if there is ground fault on the motor cable, wiring box and its internal terminals. Troubleshoot the ground fault.	
Incorrect wiring of brake resistor or brake unit.		Check the wiring of the brake resistor or braking unit.	
Malfunction caused by interference.		Verify the wiring of the control circuit and the wiring/grounding of the main circuit to prevent interference.	

ID	Display on LCD Keypad	Fault Name	Fault Descriptions
9	ōvn	Over-voltage during constant speed (ovn)	DC bus over-voltage at constant speed. When ovn occurs, the drive closes the gate of the output immediately, the motor runs freely, and the display shows an ovn error.
Action and Reset			
Action Condition		230V models: 410 V_{DC} 460V models: 820 V_{DC} 575V models: 1116 V_{DC}	
Action Time		Immediately act when the DC bus voltage is higher than the level	
Fault Treatment Parameter		N/A	
Reset Method		Manual reset	
Reset Condition		Reset only when the DC bus voltage is lower than 90% of the over-voltage level	
Record		Yes	
Cause		Corrective Actions	
Impulsive change of the load		1. Connect the brake resistor, braking unit or DC bus to the drive. 2. Reduce the load. 3. Replace the drive with a larger capacity model. 4. Adjust the braking level (Pr.07-01 or bolt position of the brake unit).	
The setting for stall prevention level is smaller than no-load current		The setting of the stall prevention level should be larger than no-load current.	
Regenerative voltage of motor inertia		Use over-voltage stall prevention function (Pr.06-01). Use a braking unit or DC bus.	
Power voltage is too high		Check if the input voltage is within the rated AC motor drive input voltage range, and check for possible voltage spikes.	
ON/OFF switch action of phase-in capacitor in the same power system		If the phase-in capacitor or active power supply unit acts in the same power system, the input voltage may surge abnormally in a short time. In this case, install an AC reactor.	
Motor ground fault		The ground short circuit current charges the capacitor in the main circuit through the power. Check if there is ground fault on the motor cable, wiring box and its internal terminals. Troubleshoot the ground fault.	
Incorrect wiring of brake resistor or brake unit		Check the wiring of the brake resistor or braking unit.	
Malfunction caused by interference		Verify the wiring of the control circuit and the wiring/grounding of the main circuit to prevent interference.	

ID	Display on LCD Keypad	Fault Name	Fault Descriptions
10	ovS	Over-voltage at stop (ovS)	Over-voltage at stop
Action and Reset			
Action Condition		230V models: 410 V_{DC} 460V models: 820 V_{DC} 575V models: 1116 V_{DC}	
Action Time		Immediately act when the DC bus voltage is higher than the level.	
Fault Treatment Parameter		N/A	
Reset Method		Manual reset	
Reset Condition		Reset only when the DC bus voltage is lower than 90% of the over-voltage level	
Record		Yes	
Cause		Corrective Actions	
Power voltage is too high		Check if the input voltage is within the rated AC motor drive input voltage range, and check for possible voltage spikes.	
ON/OFF switch action of phase-in capacitor in the same power system		If the phase-in capacitor or active power supply unit activates in the same power system, the input voltage may surge abnormally in a short time. In this case, install an AC reactor.	
Incorrect wiring of brake resistor or brake unit		Check the wiring of the brake resistor or braking unit.	
Malfunction caused by interference		Verify the wiring of the control circuit and the wiring/grounding of the main circuit to prevent interference.	
Hardware failure in voltage detection		Check if other error codes such as cd1–cd3 occur after cycling the power. If yes, return to the factory for repair.	
Motor ground fault		The ground short circuit current charges the capacitor in the main circuit through the power. Check if there is ground fault on the motor cable, wiring box and its internal terminals. Troubleshoot the ground fault.	

ID	Display on LCD Keypad	Fault Name	Fault Descriptions
11	LvA	Low-voltage during acceleration (LvA)	DC bus voltage is lower than Pr.06-00 setting value during acceleration
Action and Reset			
Action Condition		Pr.06-00 (Default = depending on the model)	
Action Time		Immediately act when the DC bus voltage is lower than Pr.06-00.	
Fault Treatment Parameter		N/A	
Reset Method		Manual reset	
Reset Condition		Reset when the DC bus voltage is higher than Pr.06-00 + 30 V	
Record		Yes	
Cause		Corrective Actions	
Power-off		Improve power supply condition.	
Power voltage changes		Adjust voltage to the power range of the drive.	
Start up the motor with large capacity		Check the power system. Increase the capacity of power equipment.	
The load is too large		Reduce the load. Increase the drive capacity. Increase the acceleration time.	
DC bus		Install DC reactor(s).	
Check if there is short circuit plate or any DC reactor installed between terminal +1 and +2		Connect short circuit plate or DC reactor between terminal +1 and +2. If the error still exists, return to the factory for repair.	

ID	Display on LCD Keypad	Fault Name	Fault Descriptions
12	Lvd	Low-voltage during deceleration (Lvd)	DC bus voltage is lower than Pr.06-00 setting value during deceleration
Action and Reset			
Action Condition		Pr.06-00 (Default = depending on the model)	
Action Time		Immediately act when the DC bus voltage is lower than Pr.06-00	
Fault Treatment Parameter		NA	
Reset Method		Manual reset	
Reset Condition		Reset when the DC bus voltage is higher than Pr.06-00 + 30 V	
Record		Yes	
Cause		Corrective Actions	
Power-off		Improve power supply condition.	
Power voltage changes		Adjust voltage to the power range of the drive.	
Start up the motor with large capacity.		Check the power system. Increase the capacity of power equipment.	
Sudden load		Reduce the load. Increase the drive capacity.	
DC bus		Install DC reactor(s).	

ID	Display on LCD Keypad	Fault Name	Fault Descriptions
13	Lvn	Low-voltage at constant speed (Lvn)	DC bus voltage is lower than Pr.06-00 setting value at constant speed
Action and Reset			
Action Condition		Pr.06-00 (Default = depending on the model)	
Action Time		Immediately act when the DC bus voltage is lower than Pr.06-00	
Fault Treatment Parameter		NA	
Reset Method		Manual reset	
Reset Condition		Reset when the DC bus voltage is higher than Pr.06-00 + 30 V	
Record		Yes	
Cause		Corrective Actions	
Power-off		Improve power supply condition.	
Power voltage changes		Adjust voltage to the power range of the drive	
Start up the motor with large capacity.		Check the power system. Increase the capacity of power equipment.	
Sudden load		Reduce the load. Increase the drive capacity.	
DC bus		Install DC reactor(s).	

ID	Display on LCD Keypad	Fault Name	Fault Descriptions
14	LvS	Low-voltage at stop (LvS)	1. DC bus voltage is lower than Pr.06-00 setting value at stop 2. Hardware failure in voltage detection
Action and Reset			
Action Condition		Pr.06-00 (Default = depending on the model)	
Action Time		Immediately act when the DC bus voltage is lower than Pr.06-00	
Fault Treatment Parameter		N/A	
Reset Method		Manual / Auto: 230V series: Lv level + 30 V_{DC} + 500 ms 460V series: Lv level + 60 V_{DC} + 500 ms 575V series: Lv level + 75 V_{DC} + 500 ms	
Reset Condition		500 ms	
Record		Yes	
Cause		Corrective Actions	
Power-off		Improve power supply condition.	
Incorrect drive models.		Check if the power specification matches the drive.	
Power voltage changes.		Adjust voltage to the power range of the drive. Cycle the power after checking the power. If LvS error still exists, return to the factory for repair.	
Start up the motor with large capacity.		Check the power system. Increase the capacity of power equipment.	
DC bus		Install DC reactor(s).	

ID	Display on LCD Keypad	Fault Name	Fault Descriptions
15	orP	Phase loss protection (orP)	Phase loss of power input

Action and Reset	
Action Condition	When DC bus ripple is higher than the protection level, and the output current exceeds 50% of the rated current, the drive starts counting. When the counting value reaches the upper limit, an orP error occurs.
Action Time	The action time varies with different output current.
Fault Treatment Parameter	Pr.06-53
Reset Method	Manual reset
Reset Condition	Immediately reset when DC bus is higher than Pr.07-00
Record	Yes

Cause	Corrective Actions
Phase loss of input power.	Correctly install the wiring of the main circuit power.
Single phase power input to three-phase model.	Choose the model whose power matches the voltage.
Power voltage changes.	If the main circuit power works normally, verify the main circuit. Cycle the power after checking the power, if orP error still exists, return to the factory for repair.
Loose wiring terminal of input power.	Tighten the terminal screws according to the torque described in the user manual.
The input cable of three-phase power is cut off.	Wire correctly. Replace the cut off cable.
Input power voltage changes too much.	Verify the setting value for Pr.06-50 Time for Input Phase Loss Detection and Pr.06-52 Ripple of Input Phase Loss.
Unbalanced three-phase of input power.	Check the power three-phase status.

ID	Display on LCD Keypad	Fault Name	Fault Descriptions
16	oH1	IGBT overheating (oH1)	IGBT temperature exceeds the protection level.

Action and Reset	
Action Condition	Depending on the model power, refer to Table 1 below. When the setting for Pr.06-15 is higher than the oH1 level, oH1 error occurs instead of oH1 warning. An IGBT overheating error occurs, and the drive stops.
Fault Treatment Parameter	N/A
Reset Method	Manual reset
Reset Condition	Reset only when IGBT temperature is lower than oH1 error level minus (-) 10°C
Record	Yes
Cause	**Corrective Actions**
Check if the ambient temperature or temperature inside the control cabinet is too high, or if there is obstruction in the ventilation hole of the control cabinet.	1. Check ambient temperature. 2. Regularly inspect the ventilation hole of the control cabinet. 3. Change the installed place if there are heating objects, such as brake resistors, in the surroundings. 4. Install/ add cooling fan or air conditioner to lower the temperature inside the cabinet.
Check if there is any obstruction on the heat sink or if the fan is running.	Remove the obstruction or replace the cooling fan.
Insufficient ventilation space.	Increase ventilation space of the drive.
Check if the drive matches the corresponding load.	1. Reduce the load. 2. Reduce the carrier wave. 3. Replace the drive with a larger capacity model.
The drive has run 100% or more than 100% of the rated output for a long time.	Replace the drive with a larger capacity model.

oH1 Warning Condition

Voltage	Model (**NOTE:** x = A or E)	oH1 (ºC)	oH Warning oH1 Warning = Pr.06-15 (ºC)
One-phase_115V	VFD1A6MS11x□□AA	95	oH1 Warning = oH1 – 5
	VFD2A5MS11x□□AA	95	
	VFD4A8MS11x□□AA	100	
One-phase_230V	VFD1A6MS21x□□AA	110	
	VFD2A8MS21x□□AA	100	
	VFD4A8MS21x□□AA	110	
	VFD7A5MS21x□□AA	105	
	VFD11AMS21x□□AA	115	
Three-phase_230V	VFD1A6M23x□□AA	100	
	VFD2A8MS23x□□AA	100	
	VFD4A8MS23x□□AA	105	
	VFD7A5MS23x□□AA	105	
	VFD11AMS23x□□AA	95	
	VFD17AMS23x□□AA	105	

Voltage	Model (**NOTE:** x = A or E)	oH1 (ºC)	oH Warning oH1 Warning = Pr.06-15 (ºC)
Three-phase_230V	VFD25AMS23x□□AA	115	oH1 Warning = oH1 – 5
	VFD33AMS23x□□AA	115	
	VFD49AMS23x□□AA	115	
	VFD65AMS23x□□AA	115	
Three-phase_460V	VFD1A5MS43x□□AA	105	
	VFD2A7MS43x□□AA	115	
	VFD4A2MS43x□□AA	105	
	VFD5A5MS43x□□AA	95	
	VFD7A3MS43x□□AA	100	
	VFD9A0MS43x□□AA	115	
	VFD13AMS43x□□AA	105	
	VFD17AMS43x□□AA	115	
	VFD25AMS43x□□AA	115	
	VFD32AMS43x□□AA	115	
	VFD38AMS43x□□AA	110	
	VFD45AMS43x□□AA	115	
575V	VFD1A7MS53x□□AA	100	
	VFD3A0MS53x□□AA	95	
	VFD4A2MS53x□□AA	95	
	VFD6A6MS53x□□AA	100	
	VFD9A9MS53x□□AA	100	
	VFD12AMS53x□□AA	105	

ID	Display on LCD Keypad	Fault Name	Fault Descriptions
18	tH1o	IGBT temperature detection failure (tH1o)	IGBT hardware failure in temperature detection
Action and Reset			
Action Condition		NTC broken or wiring failure	
Action Time		When the IGBT temperature is higher than the protection level, and detection time exceeds 100 ms, the tH1o protection activates.	
Fault Treatment Parameter		N/A	
Reset Method		Manual reset	
Reset Condition		Immediately reset	
Record		Yes	
Cause		Corrective Actions	
Hardware failure		Wait for 10 minutes, and then cycle the power. Check if tH1o protection still exists. If yes, return to the factory for repair.	

ID	Display on LCD Keypad	Fault Name	Fault Descriptions
21	oL	Over load (oL)	The AC motor drive detects excessive drive output current. Overload capacity: • Normal duty: Sustains for one minute when the drive outputs 120% of the drive's rated output current. Sustains for three seconds when the drive outputs 150% of the drive's rated output current. • Heavy duty: Sustains for one minute when the drive outputs 150% of the drive's rated output current. Sustains for three seconds when the drive outputs 200% of the drive's rated output current.

Action and Reset	
Action Condition	Based on overload curve and derating curve (refer to Section 9-7).
Action Time	When the load is higher than the protection level and exceeds allowable time, the oL protection activates.
Fault Treatment Parameter	N/A
Reset Method	Manual reset
Reset Condition	Reset in five seconds after the fault is cleared
Record	Yes

Cause	Corrective Actions
The load is too large.	Reduce the load.
Accel./Decel. time or the working cycle are too short.	Increase the setting value for Pr.01-12–01-19 (accel./decel. time)
V/F voltage is too high.	Adjust the settings for Pr.01-01–01-08 (V/F curve), especially the setting value for the mid-point voltage (if the mid-point voltage is set too low, the load capacity decreases at low speed). Refer to the V/F curve selection of Pr.01-43.
The capacity of the drive is too small.	Replace the drive with a larger capacity model.
Overload during low-speed operation.	Reduce the load during low-speed operation. Increase the drive capacity. Decrease the carrier frequency of Pr.00-17.
Torque compensation is too large.	Adjust the torque compensation (refer to Pr.07-26 Torque Compensation Gain) until the output current reduces and the motor does not stall.
Check if the setting for stall prevention is correct.	Set the stall prevention to the proper value.
Output phase loss.	Check the status of three-phase motor. Check if the cable is broken or the screws are loose.
Improper parameter settings for the speed tracking function (including restart after momentary power loss and restart after fault).	Correct the parameter settings for speed tracking. 1. Start the speed tracking function. 2. Adjust the maximum current for Pr.07-09 speed tracking.

ID	Display on LCD Keypad	Fault Name	Fault Descriptions
22	EoL 1	Electronics thermal relay 1 protection (EoL1)	Electronics thermal relay 1 protection. The drive coasts to stop once it activates.
Action and Reset			
Action Condition		Start counting when the output current > 150% of the motor 1 rated current	
Action Time		Pr.06-14 (If the output current is larger than 105% of the motor 1 rated current again within 60 sec., the counting time reduces and is less than Pr.06-14)	
Fault Treatment Parameter		N/A	
Reset Method		Manual reset	
Reset Condition		Reset in five seconds after the fault is cleared	
Record		Yes	
Cause		Corrective Actions	
The load is too large		Reduce the load.	
Accel./Decel. time or the working cycle is too short		Increase the setting values for Pr.01-12–01-19 (accel./decel. time)	
V/F voltage is too high		Adjust the settings for Pr.01-01–01-08 (V/F curve), especially the setting value for the mid-point voltage (if the mid-point voltage is set too low, the load capacity decreases at low speed). Refer to the V/F curve selection of Pr.01-43.	
Overload during low-speed operation. When using a general motor, even it operates below rated current, an overload may still occur during low-speed operation.		Decrease low-speed operation time. Replace the drive with a dedicated to VFD model. Increase the motor capacity.	
When using VFD dedicated motors, Pr.06-13 = 0 (electronic thermal relay selection motor 1 = inverter motor)		Pr.06-13 = 1 electronic thermal relay selection motor 1 = standard motor (motor with fan on the shaft).	
Incorrect value of electronic thermal relay		Reset to the correct motor rated current.	
The maximum motor frequency is set too low		Reset to the correct motor rated frequency.	
One drive to multiple motors		Set Pr.06-13 = 2 electronic thermal relay selection motor 1= disable, and install thermal relay on each motor.	
Check if the setting for stall prevention is correct.		Set the stall prevention to the proper value.	
Torque compensation is too large		Adjust the torque compensation (refer to Pr.07-26 torque compensation gain) until the current reduces and the motor does no stall.	
Motor fan error		Check the status of the fan, or replace the fan.	
Unbalanced three-phase impedance of the motor		Replace the motor.	

ID	Display on LCD Keypad	Fault Name	Fault Descriptions
23	EoL2	Electronic thermal relay 2 protection (EoL2)	Electronic thermal relay 2 protection. The drive coasts to stop once it activates.
Action and Reset			
Action Condition		Start counting when the output current > 150% of the motor 2 rated current	
Action Time		Pr.06-28 (If the output current is larger than 105% of the motor 2 rated current again within 60 sec., the counting time reduces and is less than Pr.06-28)	
Fault Treatment Parameter		N/A	
Reset Method		Manual reset	
Reset Condition		Reset in five seconds after the fault is cleared	
Record		Yes	
Cause		Corrective Actions	
The load is too large		Reduce the load	
Accel./Decel. time or the working cycle are too short.		Increase the setting values for Pr.01-12–01-19 (accel./decel. time)	
V/F voltage is too high.		Adjust the settings for Pr.01-35–01-42 (V/F curve), especially the setting value for the mid-point voltage (if the mid-point voltage is set too low, the load capacity decreases at low speed). Refer to the V/F curve selection setting of Pr.01-43.	
Overload during low-speed operation. When using general motor, even it operates below rated current, an overload may still occur during low-speed operation.		Decrease low-speed operation time. Replace the drive with a dedicated to VFD model. Increase the motor capacity.	
When using VFD dedicated motors, Pr.06-27=0 (electronic thermal relay selection motor 2 = 0 inverter motor).		Pr.06-27=1 Electronic thermal relay selection motor 2 = standard motor (motor with fan on the shaft).	
Incorrect value of electronic thermal relay		Reset to the correct motor rated current.	
The maximum motor frequency is set too low		Reset to the correct motor rated frequency.	
One drive to multiple motors		Set Pr.06-27=2 Electronic thermal relay selection motor 2 = disable, and install thermal relay on each motor.	
Check if the setting for stall prevention is correct.		Set the stall prevention to the proper value.	
Torque compensation is too large		Adjust the torque compensation (refer to Pr.07-71 torque compensation gain) until the current reduces and the motor does no stall.	
Motor fan error		Check the status of the fan, or replace the fan.	
Unbalanced three-phase impedance of the motor		Replace the motor.	

ID	Display on LCD Keypad	Fault Name	Fault Descriptions
24_1	oH3	Motor overheating (oH3) PTC	Motor overheating (PTC) (Pr.03-00–Pr.03-01 = 6 PTC), when PTC input > Pr.06-30, the fault treatment acts according to Pr.06-29.
Action and Reset			
Action Condition		PTC input value > Pr.06-30 setting (Default = 50%)	
Action Time		Immediately act	
Fault Treatment Parameter		Pr.06-29 0: Warn and continue operation 1: Fault and ramp to stop 2: Fault and coast to stop 3: No warning	
Reset Method		When Pr.06-29 = 0, oH3 is a “Warning”. The “Warning” is automatically cleared. When Pr.06-29 = 1 or 2, oH3 is a “Fault”. You must reset manually.	
Reset Condition		Immediately reset	
Record		When Pr.06-29 = 1 or 2, oH3 is a “Fault”, and the fault is recorded.	
Cause		Corrective Actions	
Motor shaft lock		Remove the shaft lock.	
The load is too large		Reduce the load. Increase the motor capacity.	
Ambient temperature is too high		Change the installed place if there are heating devices in the surroundings. Install/ add cooling fan or air conditioner to lower the ambient temperature.	
Motor cooling system error		Check the cooling system to make it work normally.	
Motor fan error		Replace the fan.	
Operate at low-speed too long.		Decrease low-speed operation time. Replace the motor with a dedicated to VFD model. Increase the motor capacity.	
Accel./Decel. time and working cycle are too short		Increase the setting values for Pr.01-12–01-19 (accel./decel. time)	
V/F voltage is too high		Adjust settings for Pr.01-01–01-08 (V/F curve), especially the setting value for the mid-point voltage (if the mid-point voltage is set too low, the load capacity decreases at low speed).	
Check if the motor rated current matches that on the motor nameplate.		Reset to the correct motor rated current.	
Check if the PTC is properly set and wired.		Check the connection between PTC thermistor and the heat protection.	
Check if the setting for stall prevention is correct.		Set the stall prevention to the proper value.	
Unbalanced three-phase impedance of the motor		Replace the motor.	
Harmonics are too high.		Use remedies to reduce harmonics.	

ID	Display on LCD Keypad	Fault Name	Fault Descriptions
24_2	oH3	Motor overheating (oH3) PT100	Motor overheating (PT100) (Pr.03-00–Pr.03-01=11 PT100). When PT100 input > Pr.06-57 (default = 7 V), the fault treatment acts according to Pr.06-29.

Action and Reset	
Action Condition	PT100 input value > Pr.06-57 setting (default = 7 V)
Action Time	Immediately act
Fault Treatment Parameter	Pr.06-29 0: Warn and continue operation 1: Fault and ramp to stop 2: Fault and coast to stop 3: No warning
Reset Method	When Pr.06-29 = 0 and the temperature < Pr.06-56, oH3 is automatically cleared. When Pr.06-29 = 1 or 2, oH3 is a “Fault”. You must reset manually.
Reset Condition	Immediately reset
Record	When Pr.06-29 = 1 or 2, oH3 is a “Fault”, and the fault is recorded.

Cause	Corrective Actions
Motor shaft lock	Remove the shaft lock.
The load is too large	Reduce the load. Increase the motor capacity.
Ambient temperature is too high	Change the installed place If there are heating devices in the surroundings. Install/ add cooling fan or air conditioner to lower the ambient temperature.
Motor cooling system error	Check the cooling system to make it work normally.
Motor fan error	Replace the fan.
Operate at low-speed too long	Decrease low-speed operation time. Replace the motor with a dedicated to VFD model. Increase the motor capacity.
Accel./Decel. time and working cycle are too short	Increase the setting values for Pr.01-12–Pr.01-19 (accel./decel. time)
V/F voltage is too high	Adjust settings for Pr.01-01–01-08 (V/F curve), especially the setting value for the mid-point voltage (if the mid-point voltage is set too low, the load capacity decreases at low speed).
Check if the motor rated current matches that on the motor nameplate.	Reset to the correct motor rated current.
Check if the PT100 is properly set and wired.	Check connection of PT100 thermistor.
Check if the setting for stall prevention is correct.	Set the stall prevention to the proper value.
Unbalanced three-phase impedance of the motor	Replace the motor.
Harmonics are too high	Use remedies to reduce harmonics.

ID	Display on LCD Keypad	Fault Name	Fault Descriptions
26	ot1	Over torque 1 (ot1)	When the output current exceeds the over-torque detection level (Pr.06-07) and exceeds over-torque detection time (Pr.06-08), and when Pr.06-06 or Pr.06-09 is set to 2 or 4, the ot1 error displays.

Action and Reset		
Action Condition	Pr.06-07	
Action Time	Pr.06-08	
Fault Treatment Parameter	Pr.06-06 0: No function 1: Continue operation after over-torque detection during constant speed operation 2: Stop after over-torque detection during constant speed operation 3: Continue operation after over-torque detection during RUN 4: Stop after over-torque detection during RUN	
Reset Method	Auto	When Pr.06-06 = 1 or 3, ot1 is a “Warning”. The warning is automatically cleared when the output current < (Pr.06-07 – 5%)
	Manual	When Pr.06-06 = 2 or 4, ot1 is a “Fault”. You must reset manually.
Reset Condition	Immediately reset	
Record	When Pr.06-06 = 2 or 4, ot1 is a “Fault”, and the fault is recorded.	

Cause	Corrective Actions
Incorrect parameter setting	Configure the settings for Pr.06-07 and Pr.06-08 again.
Mechanical failure (e.g. over-torque, mechanical lock)	Remove the causes of malfunction.
The load is too large	Reduce the load. Replace the motor with a larger capacity model.
Accel./Decel. time and working cycle are too short	Increase the setting values for Pr.01-12–Pr.01-19 (accel./decel. time)
V/F voltage is too high	Adjust the V/F curve (Motor 1, Pr.01-01–01-08), especially the setting value for the mid-point voltage (if the mid-point voltage is set too low, the load capacity decreases at low speed).
The motor capacity is too small	Replace the motor with a larger capacity model.
Overload during low-speed operation	Decrease low-speed operation time. Increase the motor capacity.
Torque compensation is too large	Adjust the torque compensation (refer to Pr.07-26 torque compensation gain) until the current reduces and the motor does no stall.
Improper parameter settings for speed tracking function (including restart after momentary power loss and restart after fault)	Correct the parameter settings for speed tracking. 1. Start the speed tracking function. 2. Adjust the maximum current for Pr.07-09 speed tracking.

ID	Display on LCD Keypad	Fault Name	Fault Descriptions
27	ot2	Over torque 2 (ot2)	When the output current exceeds the over-torque detection level (Pr.06-10) and exceeds over-torque detection time (Pr.06-11), and when Pr.06-09 is set to 2 or 4, the ot2 error displays.

Action and Reset		
Action Condition	Pr.06-10	
Action Time	Pr.06-11	
Fault Treatment Parameter	Pr.06-09 0: No function 1: Continue operation after over-torque detection during constant speed operation 2: Stop after over-torque detection during constant speed operation 3: Continue operation after over-torque detection during RUN 4: Stop after over-torque detection during RUN	
Reset Method	Auto	When Pr.06-09 = 1 or 3, ot2 is a “Warning”. The warning is automatically cleared when the output current < (Pr.06-10 – 5%).
	Manual	When Pr.06-09 = 2 or 4, ot2 is a “Fault”. You must reset manually.
Reset Condition	Immediately reset	
Record	When Pr.06-09 = 2 or 4, ot2 is a “Fault”, and the fault is recorded.	

Cause	Corrective Actions
Incorrect parameter setting	Configure the settings for Pr.06-10 and Pr.06-11 again.
Mechanical failure (e.g. over-torque, mechanical lock)	Remove the causes of malfunction.
The load is too large.	Reduce the load. Replace the motor with a larger capacity model.
Accel./Decel. time and working cycle are too short	Increase the setting values for Pr.01-12–01-19 (accel./decel. time).
V/F voltage is too high	Adjust the V/F curve (Motor 2, Pr.01-35–01-42), especially the setting value for the mid-point voltage (if the mid-point voltage is set too low, the load capacity decreases at low speed).
The motor capacity is too small	Replace the motor with a larger capacity model.
Overload during low-speed operation	Decrease low-speed operation time. Increase the motor capacity.
Torque compensation is too large	Adjust the torque compensation (refer to Pr.07-71 torque compensation gain) until the current reduces and the motor does no stall.
Improper parameter settings for speed tracking function (including restart at momentary power loss and restart after fault)	Correct the parameter settings for speed tracking. 1. Start the speed tracking function. 2. Adjust the maximum current for Pr.07-09 speed tracking.

ID	Display on LCD Keypad	Fault Name	Fault Descriptions
28	uC	Under current (uC)	Low current detection

Action and Reset		
Action Condition	Pr.06-71	
Action Time	Pr.06-72	
Fault Treatment Parameter	Pr.06-73 0: No function 1: Fault and coast to stop 2: Fault and ramp to stop by the 2nd deceleration time 3: Warn and continue operation	
Reset Method	Auto	When Pr.06-73 = 3, uC is a “Warning”. The warning is automatically cleared when the output current > (Pr.06-71+0.1A).
	Manual	When Pr.06-73 = 1 or 2, uC is a “Fault”. You must reset manually.
Reset Condition	Immediately reset	
Record	When Pr.06-71 = 1 or 2, uC is a “Fault”, and the fault is recorded.	

Cause	Corrective Actions
Motor cable disconnection	Troubleshoot the connection between the motor and the load.
Improper setting of low-current protection	Reset Pr.06-71, Pr.06-72 and Pr.06-73 to proper settings.
The load is too low	Check the load status. Check if the motor capacity matches the load.

ID	Display on LCD Keypad	Fault Name	Fault Descriptions
31	cF2	EEPROM read error (cF2)	Internal EEPROM cannot be read
Action and Reset			
Action Condition		Firmware internal detection	
Action Time		cF2 acts immediately when the drive detects the fault	
Fault Treatment Parameter		N/A	
Reset Method		Manual reset	
Reset Condition		Immediately reset	
Record		Yes	
Cause		Corrective Actions	
Internal EEPROM cannot be read		Press “RESET” key or reset the parameter to the default setting, if cF2 still exists, return to the factory for repair. Cycle the power, if cF2 error still exists, return to the factory for repair.	

ID	Display on LCD Keypad	Fault Name	Fault Descriptions
33	cd1	U-phase error (cd1)	U-phase current detection error when power is ON

Action and Reset	
Action Condition	Hardware detection
Action Time	cd1 acts immediately when the drive detects the fault
Fault Treatment Parameter	N/A
Reset Method	Power-off
Reset Condition	N/A
Record	Yes
Cause	Corrective Actions
Hardware failure	Cycle the power. If cd1 still exists, return to the factory for repair.

ID	Display on LCD Keypad	Fault Name	Fault Descriptions
34	cd2	V-phase error (cd2)	V-phase current detection error when power ON

Action and Reset	
Action Condition	Hardware detection
Action Time	cd2 acts immediately when the drive detects the fault
Fault Treatment Parameter	N/A
Reset Method	Power-off
Reset Condition	N/A
Record	Yes
Cause	Corrective Actions
Hardware failure	Cycle the power. If cd2 still exists, return to the factory for repair.

ID	Display on LCD Keypad	Fault Name	Fault Descriptions
35	cd3	W-phase error (cd3)	W-phase current detection error when power ON.

Action and Reset	
Action Condition	Hardware detection
Action Time	cd3 acts immediately when the drive detects the fault
Fault Treatment Parameter	N/A
Reset Method	Power-off
Reset Condition	N/A
Record	Yes
Cause	**Corrective Actions**
Hardware failure	Cycle the power. If cd3 still exists, return to the factory for repair.

ID	Display on LCD Keypad	Fault Name	Fault Descriptions
36	Hd0	cc hardware error (Hd0)	cc (current clamp) hardware protection error when power is ON.
Action and Reset			
Action Condition		Hardware detection	
Action Time		Hd0 acts immediately when the drive detects the fault	
Fault Treatment Parameter		N/A	
Reset Method		Power-off	
Reset Condition		N/A	
Record		Yes	
Cause		Corrective Actions	
Hardware failure		Cycle the power. If Hd0 still exists, return to the factory for repair.	

ID	Display on LCD Keypad	Fault Name	Fault Descriptions
37	Hd1	oc hardware error (Hd1)	oc hardware protection error when power is ON

Action and Reset	
Action Condition	Hardware detection
Action Time	Hd1 acts immediately when the drive detects the fault
Fault Treatment Parameter	N/A
Reset Method	Power-off
Reset Condition	N/A
Record	Yes
Cause	Corrective Actions
Hardware failure	Cycle the power. If Hd1 still exists, return to the factory for repair.

ID	Display on LCD Keypad	Fault Name	Fault Descriptions
40	AUE	Auto-tuning error (AUE)	Motor auto-tuning error

Action and Reset	
Action Condition	Hardware detection
Action Time	Immediately act
Fault Treatment Parameter	N/A
Reset Method	Manual reset
Reset Condition	Immediately reset
Record	Yes

Cause	Corrective Actions
Press “STOP” key during auto-tuning	Re-execute auto-tuning.
Incorrect motor capacity (too large or too small) and parameter setting	Check motor capacity and related parameters. Set the correct parameters, that is Pr.01-01–Pr.01-02. Set Pr.01-00 larger than the motor rated frequency.
Incorrect motor wiring	Check the wiring.
Motor shaft lock	Remove the cause of motor shaft lock.
The electromagnetic contactor is ON at output side (U/V/W) of the drive	Make sure the electromagnetic valve is OFF.
The load is too large.	Reduce the load. Replace the motor with a larger capacity model.
Accel./Decel. time is too short	Increase the setting values for Pr.01-12–Pr.01-19 (accel./decel. time).

ID	Display on LCD Keypad	Fault Name	Fault Descriptions
41	AFE	PID loss ACI (AFE)	PID feedback loss (analog feedback signal is only valid when the PID function is enabled)

Action and Reset		
Action Condition	When the analog input < 4 mA (only detects 4–20 mA analog input)	
Action Time	Pr.08-08	
Fault Treatment Parameter	Pr.08-09 0: Warn and continue operation 1: Fault and ramp to stop 2: Fault and coast to stop 3: Warn and operate at last frequency	
Reset Method	Auto	When Pr.08-09 = 3 or 4, AFE is a “Warning”. When the feedback signal is > 4 mA, the ”Warning” is automatically cleared.
	Manual	When Pr.08-09 = 1 or 2, AFE is a “Fault”. You must reset manually.
Reset Condition	Immediately reset	
Record	When Pr.08-09 = 1 or 2, AFE is a “Fault”, and the fault is recorded; when Pr.08-09=3 or 4, AFE is a “Warning”, and the warning is not recorded.	

Cause	Corrective Actions
PID feedback cable is loose or cut off	Tighten the terminal. Replace the cable with a new one.
Feedback device failure	Replace the device with a new one.
Hardware failure	Check all the wiring. If AFE fault still exists, return to the factory for repair.

ID	Display on LCD Keypad	Fault Name	Fault Descriptions
43	PGF2	PG feedback loss (PGF2)	Pr.10-00 and Pr.10-02 is not set in the PG control mode. When press “RUN” key, PGF2 fault occurs.

Action and Reset	
Action Condition	Software detection
Action Time	Immediately act
Fault Treatment Parameter	N/A
Reset Method	Manual reset
Reset Condition	Immediately reset
Record	Yes

Cause	Corrective Actions
Incorrect setting of encoder parameter	Reset encoder parameters (Pr.10-00 and Pr.10-02).
Incorrect selection of the control mode	Choose the correct control mode.

ID	Display on LCD Keypad	Fault Name	Fault Descriptions
44	PGF3	PG feedback stall (PGF3)	Under PG mode, when the motor frequency exceeds the encoder observer stall level (Pr.10-10) and starts to count, the fault time is longer than the detection time of encoder observer stall (Pr.10-11), then PGF3 fault occurs.

Action and Reset	
Action Condition	Pr.10-10
Action Time	Pr.10-11
Fault Treatment Parameter	Pr.10-12 0: Warn and continue operation 1: Fault and ramp to stop 2: Fault and coast to stop
Reset Method	Manual reset
Reset Condition	Immediately reset
Record	Yes
Cause	Corrective Actions
Incorrect setting of encoder parameter	Reset encoder parameter (Pr.10-01).
Pr. 01-00 is set too small	Set proper value for Pr.01-00.
Incorrect setting for ASR parameters and accel./decel. time	Reset ASR parameters. Set correct accel./decel. time.
Incorrect setting for PG feedback stall	Reset proper values for Pr.10-10 and Pr.10-11.

ID	Display on LCD Keypad	Fault Name	Fault Descriptions
45	PGF4	PG slip error (PGF4)	Under PG mode, when the motor frequency exceeds encoder observer slip range (Pr.10-13) and starts to count, the fault time is longer than the detection time of encoder observer slip (Pr.10-14), PGF4 fault occurs.

Action and Reset		
Action Condition	Pr.10-13	
Action Time	Pr.10-14	
Fault Treatment Parameter	Pr.10-15 0: Warn and continue operation 1: Fault and ramp to stop 2: Fault and coast to stop	
Reset Method	Auto	When Pr.10-15 = 0, PGF4 is a “Warning”. When the deviation between the output frequency and motor frequency is smaller than the encoder observer slip range, the warning is automatically cleared.
	Manual	When Pr.10-15 = 1 or 2, PGF4 is a “Fault”. You must reset manually.
Reset Condition	Immediately reset	
Record	When Pr.10-15 = 1 or 2, PGF4 is a “Fault”, and the fault is recorded.	

Cause	Corrective Actions
Incorrect settings for PG feedback parameters	Reset correct values for Pr.10-13 and Pr.10-14.
Incorrect settings for ASR parameters and accel./decel. time	Reset ASR parameters. Set correct accel./decel time.
Incorrect settings of encoder parameters	Reset encoder parameters (Pr.10-01).
Accel./Decel. time is too short	Reset proper accel./decel. time.
Incorrect settings of torque limit parameters (Pr.06-12,Pr.11-17–20)	Reset proper setting values for Pr.06-12 and Pr.11-17–Pr.11-20.
Motor shaft lock	Remove causes of motor shaft lock.
Mechanical brake is not released	Check the action timing of the system.

ID	Display on LCD Keypad	Fault Name	Fault Descriptions
48	ACE	ACI loss (ACE)	Analog input loss (including all the 4–20 mA analog signal)

Action and Reset		
Action Condition	When the analog input is < 4 mA (only detects 4–20 mA analog input)	
Action Time	Immediately act	
Fault Treatment Parameter	Pr.03-19 0: Disable 1: Continue operation at the last frequency (warning, ANL is displayed on the keypad) 2: Decelerate to stop (warning, ANL is displayed on the keypad) 3: Stop immediately and display ACE	
Reset Method	Auto	When Pr.03-19 = 1 or 2, ACE is a “Warning”. When analog input signal is > 4 mA, the warning is automatically cleared.
	Manual	When Pr.03-19 = 3, ACE is a “Fault”. You must reset manually.
Reset Condition	Immediately reset	
Record	When Pr.03-19 = 3, ACE is a “Fault”, and the fault is recorded.	

Cause	Corrective Actions
ACI cable is loose or cut off	Tighten the terminal. Replace the cable with a new one.
External device failure	Replace the device with a new one.
Hardware failure	Check all the wiring. If ACE still exists, return to the factory for repair.

ID	Display on LCD Keypad	Fault Name	Fault Descriptions
49	EF	External fault (EF)	External fault. When the drive decelerates based on the setting of Pr.07-20, the EF fault displays on the keypad.
Action and Reset			
Action Condition		MIx = EF and the MI terminal is ON	
Action Time		Immediately act	
Fault Treatment Parameter		Pr.07-20 0: Coast to stop 1: Stop by the 1st deceleration time 2: Stop by the 2nd deceleration time 3: Stop by the 3rd deceleration time 4: Stop by the 4th deceleration time 5: System deceleration 6: Automatic deceleration (Pr.01-46)	
Reset Method		Manual reset	
Reset Condition		Manual reset only after the external fault is cleared (terminal status is recovered)	
Record		Yes	
Cause		Corrective Actions	
External fault		Press RESET key after the fault is cleared.	

ID	Display on LCD Keypad	Fault Name	Fault Descriptions
50	EF1	Emergency stop (EF1)	When the contact of MIx=EF1 is ON, the output stops immediately and displays EF1 on the keypad. The motor is in free running.
Action and Reset			
Action Condition		MIx = EF1 and the MI terminal is ON	
Action Time		Immediately act	
Fault Treatment Parameter		N/A	
Reset Method		Manual reset	
Reset Condition		Manual reset only after the external fault is cleared (terminal status is recovered)	
Record		Yes	
Cause		Corrective Actions	
When MIx=EF1 activates		Verify if the system is back to normal condition, and then press “RESET” key to go back to the default.	

ID	Display on LCD Keypad	Fault Name	Fault Descriptions
51	bb	External base block (bb)	When the contact of MIx=bb is ON, the output stops immediately and displays bb on the keypad. The motor is in free running.
Action and Reset			
Action Condition		MIx = bb and the MI terminal is ON	
Action Time		Immediately act	
Fault Treatment Parameter		N/A	
Reset Method		The display “bb” is automatically cleared after the fault is cleared.	
Reset Condition		N/A	
Record		No	
Cause		Corrective Actions	
When MIx=bb activates		Verify if the system is back to normal condition, and then press “RESET” key to go back to the default.	

ID	Display on LCD Keypad	Fault Name	Fault Descriptions
52	Pcod	Password is locked (Pcod)	Entering the wrong password three consecutive times

Action and Reset	
Action Condition	Entering the wrong password three consecutive times
Action Time	Immediately act
Fault Treatment Parameter	N/A
Reset Method	Manual reset
Reset Condition	Power-off
Record	Yes
Cause	**Corrective Actions**
Incorrect password input through Pr.00-07	1. Input the correct password after rebooting the motor drive. 2. If you forget the password, do the following steps: Step 1: Input 9999 and press ENTER. Step 2: Repeat step 1. Input 9999 and press ENTER. (You need to finish step 1 and step 2 within 10 seconds. If you don't finish the two steps in 10 seconds, try again.) 3. The parameter settings return to the default when the "Input 9999" process is finished.

ID	Display on LCD Keypad	Fault Name	Fault Descriptions
54	CE1	Illegal command (CE1)	Communication command is illegal

Action and Reset	
Action Condition	When the function code is not 03, 06, 10, or 63.
Action Time	Immediately act
Fault Treatment Parameter	N/A
Reset Method	Manual reset
Reset Condition	Immediately reset
Record	No

Cause	Corrective Actions
Incorrect communication command from the upper unit	Check if the communication command is correct.
Malfunction caused by interference	Verify the wiring and grounding of the communication circuit. It is recommended to separate the communication circuit from the main circuit, or wire in 90 degree for effective anti-interference performance.
Different communication setting from the upper unit	Check if the setting for Pr.09-04 is the same as the setting for the upper unit.
Disconnection or bad connection of the cable	Check the cable and replace it if necessary.

ID	Display on LCD Keypad	Fault Name	Fault Descriptions
55	CE2	Illegal data address (CE2)	Data address is illegal

Action and Reset	
Action Condition	When the data address is correct.
Action Time	Immediately act
Fault Treatment Parameter	N/A
Reset Method	Manual reset
Reset Condition	Immediately reset
Record	No

Cause	Corrective Actions
Incorrect communication command from the upper unit	Check if the communication command is correct.
Malfunction caused by interference	Verify the wiring and grounding of the communication circuit. It is recommended to separate the communication circuit from the main circuit, or wire in 90 degree for effective anti-interference performance.
Different communication setting from the upper unit	Check if the setting for Pr.09-04 is the same as the setting for the upper unit.
Disconnection or bad connection of the cable	Check the cable and replace it if necessary.

ID	Display on LCD Keypad	Fault Name	Fault Descriptions
56	CE3	Illegal data value (CE3)	Data value is illegal

Action and Reset	
Action Condition	When the data length is too long
Action Time	Immediately act
Fault Treatment Parameter	N/A
Reset Method	Manual reset
Reset Condition	Immediately reset
Record	No

Cause	Corrective Actions
Incorrect communication command from the upper unit	Check if the communication command is correct.
Malfunction caused by interference	Verify the wiring and grounding of the communication circuit. It is recommended to separate the communication circuit from the main circuit, or wire in 90 degree for effective anti-interference performance.
Different communication setting from the upper unit	Check if the setting for Pr.09-04 is the same as the setting for the upper unit.
Disconnection or bad connection of the cable	Check the cable and replace it if necessary.

ID	Display on LCD Keypad	Fault Name	Fault Descriptions
57	CE4	Data is written to read-only address (CE4)	Data is written to read-only address

Action and Reset	
Action Condition	When the data is written to read-only address.
Action Time	Immediately act
Fault Treatment Parameter	N/A
Reset Method	Manual reset
Reset Condition	Immediately reset
Record	No

Cause	Corrective Actions
Incorrect communication command from the upper unit	Check if the communication command is correct.
Malfunction caused by interference	Verify the wiring and grounding of the communication circuit. It is recommended to separate the communication circuit from the main circuit, or wire in 90 degree for effective anti-interference performance.
Different communication setting from the upper unit	Check if the setting for Pr.09-04 is the same as the setting for the upper unit.
Disconnection or bad connection of the cable	Check the cable and replace it if necessary.

ID	Display on LCD Keypad	Fault Name	Fault Descriptions
58	CE10	Modbus transmission time-out (CE10)	Modbus transmission time-out occurs
Action and Reset			
Action Condition		When the communication time exceeds the detection time for Pr.09-03 communication time-out.	
Action Time		Pr.09-03	
Fault Treatment Parameter		Pr.09-02 0: Warn and continue operation 1: Fault and ramp to stop 2: Fault and coast to stop 3: No warning, no fault, and continue operation	
Reset Method		Manual reset	
Reset Condition		Immediately reset	
Record		Yes	
Cause		Corrective Actions	
The upper unit does not transmit the communication command within Pr.09-03 setting time.		Check if the upper unit transmits the communication command within the setting time for Pr.09-03.	
Malfunction caused by interference		Verify the wiring and grounding of the communication circuit. It is recommended to separate the communication circuit from the main circuit, or wire in 90 degree for effective anti-interference performance.	
Different communication setting from the upper unit		Check if the setting for Pr.09-04 is the same as the setting for the upper unit.	
Disconnection or bad connection of the cable		Check the cable and replace it if necessary.	

ID	Display on LCD Keypad	Fault Name	Fault Descriptions
61	ydc	Y-connection / Δ-connection switch error (ydc)	An error occurs when Y-Δ switches
Action and Reset			
Action Condition		1. ydc occurs when the confirmation signals of Y-connection and Δ-connection are conducted at the same time. 2. If any of confirmation signals is not conducted within Pr.05-25, ydc occurs.	
Action Time		Pr.05-25	
Fault Treatment Parameter		N/A	
Reset Method		Manual reset	
Reset Condition		Can be reset only when the confirmation signal of Y-connection is conducted if it is Y-connection, or when the confirmation signal of Δ-connection is conducted if it is Δ-connection.	
Record		Yes	
Cause		Corrective Actions	
The electromagnetic valve operates incorrectly during Y-Δ switch.		Check if the electromagnetic valve works normally. If not, replace it.	
Incorrect parameter setting		Check if related parameters are all set up and set correctly.	
The wiring of Y-Δ switch function is incorrect		Check the wiring.	

ID	Display on LCD Keypad	Fault Name	Fault Descriptions
62	dEb	Deceleration energy backup error (dEb)	When Pr.07-13 is not 0, and the power is suddenly off, causing the DC bus voltage lower than the dEb action level, the dEb function acts and the motor ramps to stop. Then dEb displays on the keypad.

Action and Reset		
Action Condition	When Pr.07-13 is not 0, and the DC bus voltage is lower than the level of dEb.	
Action Time	Immediately act	
Fault Treatment Parameter	N/A	
Reset Method	Auto	When Pr.07-13 = 2 (dEb with auto-acceleration / auto-deceleration, the drive outputs the frequency after the power is restored): dEb is automatically cleared.
	Hand	When Pr.07-13 = 1 (dEb with auto-acceleration / auto-deceleration, the drive does not output the frequency after the power is restored): The drive stops when dEb acts and the rotation speed becomes 0 Hz, then the drive can be reset manually.
Reset Condition	Auto: The fault is automatically cleared. Hand: When the drive decelerates to 0 Hz.	
Record	Yes	

Cause	Corrective Actions
Unstable power source or the power is off	Check the power system.
There is any other large load operates in the power system	1. Replace power system with a larger capacity. 2. Use a different power system from the large load system.

ID	Display on LCD Keypad	Fault Name	Fault Descriptions
63	oSL	Over slip error (oSL)	On the basis of the maximum slip limit set via Pr.10-29, the speed deviation is abnormal. When the motor drive outputs at constant speed, F>H or F<H exceeds the level set via Pr.07-29, and it exceeds the time set via Pr.07-30, oSL shows. oSL occurs in induction motors only.

Action and Reset		
Action Condition	Pr.07-29 100% of Pr.07-29 = the maximum limit of the slip frequency (Pr.10-29)	
Action Time	Pr.07-30	
Fault Treatment Parameter	Pr.07-31 0: Warn and continue operation 1: Fault and ramp to stop 2: Fault and coast to stop 3: No warning	
Reset Method	Auto	Pr.07-31 = 0 is a warning. When the motor drive outputs at constant speed, and F>H or F<H does not exceed the level set via Pr.07-29 anymore, oSL warning will be cleared automatically.
	Hand	When Pr.07-31 = 1 or 2, oSL is an error, and it needs to reset manually.
Reset Condition	Immediately reset	
Record	Pr.07-31 = 1 or 2, oSL is “Fault”, and the fault is recorded.	

Cause	Corrective Actions
Any of the motor parameters in parameter group 5 may be incorrect	Check the motor parameters.
Overload	Decrease the load.
Any of the setting value of Pr.07-29, 07-30, and 10-29 is improper	Check the setting of oSL protection function related parameters.

ID	Display on LCD Keypad	Fault Name	Fault Descriptions
72	STL1	S1 internal loop detection error (STL1)	S1–DCM internal loop detection error
Action and Reset			
Action Condition		Hardware detection	
Action Time		Immediately act	
Fault Treatment Parameter		N/A	
Reset Method		Hardware failure, and cannot reset. Cycle the power.	
Reset Condition		N/A	
Record		Yes	
Cause		Corrective Actions	
S1 and DCM short circuit lines are not connected		Re-connect the short circuit line	
Hardware failure		After you make sure all the wiring is correct, if STL1 fault still exists after cycling the power, return to the factory for repair.	

ID	Display on LCD Keypad	Fault Name	Fault Descriptions
76	Sto	STO (STo)	Safety Torque Off function active

Action and Reset		
Action Condition	Hardware detection	
Action Time	Immediately act	
Fault Treatment Parameter	N/A	
Reset Method	Auto	When Pr.06-44 = 1 and after STo error is cleared, it automatically resets.
	Manual	When Pr.06-44 = 0 and after STo error is cleared, reset it manually.
Reset Condition	Reset only after STo error is cleared.	
Record	Yes	
Cause	Corrective Actions	
The switch action of S1 / DCM and S2 / DCM (OPEN)	Reset the switch (ON) and cycle the power.	

ID	Display on LCD Keypad	Fault Name	Fault Descriptions
77	STL2	S2 internal loop detection error (STL2)	S2–DCM internal loop detection error
Action and Reset			
Action Condition		Hardware detection	
Action Time		Immediately act	
Fault Treatment Parameter		N/A	
Reset Method		Hardware failure, and cannot reset. Cycle the power.	
Reset Condition		N/A	
Record		Yes	
Cause		Corrective Actions	
S2 and DCM short circuit lines are not connected		Re-connect the short circuit lines	
Hardware failure		After you make sure all the wiring is correct, if STL2 fault still exists after cycling the power, return to the factory for repair.	

ID	Display on LCD Keypad	Fault Name	Fault Descriptions
78	STL3	Internal loop detection error (STL3)	Internal loop detection error
Action and Reset			
Action Condition		Hardware detection	
Action Time		Immediately act	
Fault Treatment Parameter		N/A	
Reset Method		Hardware failure, and cannot reset. Cycle the power.	
Reset Condition		N/A	
Record		Yes	
Cause		Corrective Actions	
S1 and DCM, or S2 and DCM short circuit lines are not connected		Re-connect the short circuit lines.	
Hardware failure		After you make sure all the wiring is correct, if STL3 fault still exists after cycling the power, return to the factory for repair.	

ID	Display on LCD Keypad	Fault Name	Fault Descriptions
79	Aoc	U-phase over-current before run (Aoc)	U-phase short circuit detected when the output wiring detection is performed before the drive runs.
Action and Reset			
Action Condition		300% of the rated current	
Action Time		Immediately act	
Fault Treatment Parameter		N/A	
Reset Method		Manual reset	
Reset Condition		Reset in five seconds after the fault clears	
Record		Yes	
Cause		Corrective Actions	
Incorrect wiring for the motor		Check if the motor's internal wiring and the UVW wiring of the drive output terminal are correct.	
Short-circuit at motor output due to poor insulation wiring		Check the motor cable and remove causes of the short circuits, or replace the cable before turning on the power.	
Check for possible burnout or aging insulation of the motor		Check the motor insulation value with megger. Replace the motor if the insulation is poor.	
Malfunction caused by interference		Verify the wiring of the control circuit and the wiring/grounding of the main circuit to prevent interference.	
The length of motor cable is too long		Increase the AC motor drive's capacity. Install AC reactor(s) on the output side (U/V/W).	
Hardware failure		The Aoc occurs due to the short circuit or ground fault at the output side of the drive. Check for possible short circuits between terminals with the electric meter: B1 corresponds to U, V and W; DC- corresponds to U, V and W; ⏚ corresponds to U, V and W. If short circuit occurs, return to the factory for repair.	

ID	Display on LCD Keypad	Fault Name	Fault Descriptions
80	boc	V-phase over-current before run (boc)	V-phase short circuit detected when the output wiring detection is performed before the drive runs.
Action and Reset			
Action Condition		300% of the rated current	
Action Time		Immediately act	
Fault Treatment Parameter		N/A	
Reset Method		Manual reset	
Reset Condition		Reset in five seconds after the fault clears	
Record		Yes	
Cause		Corrective Actions	
Incorrect wiring for the motor		Check if the motor's internal wiring and the UVW wiring of the drive output terminal are correct.	
Short-circuit at omotor output due to poor insulation wiring		Check the motor cable and remove causes of the short circuits, or replace the cable before turning on the power.	
Check for possible burnout or aging insulation of the motor		Check the motor insulation value with megger. Replace the motor if the insulation is poor.	
Malfunction caused by interference		Verify the wiring of the control circuit and the wiring/grounding of the main circuit to prevent interference.	
The length of motor cable is too long		Increase the AC motor drive's capacity. Install AC reactor(s) on the output side (U/V/W).	
Hardware failure		The boc occurs due to the short circuit or ground fault at the output side of the drive. Check for possible short circuits between terminals with the electric meter: B1 corresponds to U, V and W; DC- corresponds to U, V and W; ⏚ corresponds to U, V and W. If short circuit occurs, return to the factory for repair.	

ID	Display on LCD Keypad	Fault Name	Fault Descriptions
81	coc	W-phase over-current before run (coc)	W-phase short circuit detected when the output wiring detection is performed before the drive runs.
Action and Reset			
Action Condition		300% of the rated current	
Action Time		Immediately act	
Fault Treatment Parameter		N/A	
Reset Method		Manual reset	
Reset Condition		Reset in five seconds after the fault clears	
Record		Yes	
Cause		Corrective Actions	
Incorrect wiring for the motor		Check if the motor's internal wiring and the UVW wiring of the drive output terminal are correct.	
Short-circuit at omotor output due to poor insulation wiring		Check the motor cable and remove causes of the short circuits, or replace the cable before turning on the power.	
Check for possible burnout or aging insulation of the motor		Check the motor insulation value with megger. Replace the motor if the insulation is poor.	
Malfunction caused by interference		Verify the wiring of the control circuit and the wiring/grounding of the main circuit to prevent interference.	
The length of motor cable is too long		Increase the AC motor drive's capacity. Install AC reactor(s) on the output side (U/V/W).	
Hardware failure		The coc occurs due to the short circuit or ground fault at the output side of the drive. Check for possible short circuits between terminals with the electric meter: B1 corresponds to U, V and W; DC- corresponds to U, V and W; ⏚ corresponds to U, V and W. If short circuit occurs, return to the factory for repair.	

ID	Display on LCD Keypad	Fault Name	Fault Descriptions
82	oPL 1	Output phase loss U phase (oPL1)	U phase output phase loss
Action and Reset			
Action Condition		Pr.06-47	
Action Time		Pr.06-46 Pr.06-48: Use the setting value of Pr.06-48 first. If DC braking function activates, use that of Pr.06-46.	
Fault Treatment Parameter		Pr.06-45 0: Warn and continue operation 1: Fault and ramp to stop 2: Fault and coast to stop 3: No warning	
Reset Method		Manual reset	
Reset Condition		Immediately reset	
Record		Pr.06-45 = 1 or 2 is “Fault”, and the fault is recorded.	
Cause		Corrective Actions	
Unbalanced three-phase impedance of the motor		Replace the motor.	
The motor is wired incorrectly		Check the cable condition. Replace the cable.	
Using a single-phase motor		Choose a three-phase motor	
The current sensor is damaged		Check the flat cable of the control board. Re-do the wiring and test again if the flat cable is loose. If the fault still exists, return to the factory for repair. Verify that the three-phase current is balanced with a current clamp meter. If it is balanced and the oPL1 fault still exists, return to the factory for repair.	
The drive capacity is much larger than the motor capacity		Make sure the capacity of the drive and motor match to each other.	

ID	Display on LCD Keypad	Fault Name	Fault Descriptions
83	oPL2	Output phase loss V phase (oPL2)	V phase output phase loss
Action and Reset			
Action Condition		Pr.06-47	
Action Time		Pr.06-46 Pr.06-48: Use the setting value of Pr.06-48 first. If DC braking function activates, use that of Pr.06-46.	
Fault Treatment Parameter		Pr.06-45 0: Warn and keep operation 1: Fault and ramp to stop 2: Fault and coast to stop 3: No warning	
Reset Method		Manual reset	
Reset Condition		Immediately reset	
Record		When Pr.06-45 = 1 or 2, oPL2 is a “Fault”, and the fault is recorded.	
Cause		Corrective Actions	
Unbalanced three-phase impedance of the motor		Replace the motor.	
Check if the wiring is incorrect		Check the cable and replace it if necessary.	
Check if the motor is a single-phase motor		Choose a three-phase motor.	
Check if the current sensor is broken		Check if the control board cable is loose. If yes, reconnect the cable and run the drive to test. If the fault still exists, return to the factory for repair. Check if the three-phase current is balanced with a current clamp meter. If the current is balanced and the oPL2 fault still exists, return to the factory for repair.	
Check if the drive capacity is larger than the motor capacity		Choose the drive that matches the motor capacity.	

ID	Display on LCD Keypad	Fault Name	Fault Descriptions
84	oPL3	Output phase loss W phase (oPL3)	W phase output phase loss
Action and Reset			
Action Condition		Pr.06-47	
Action Time		Pr.06-46 Pr.06-48: Use the setting value of Pr.06-48 first. If DC braking function activates, use that of Pr.06-46.	
Fault Treatment Parameter		Pr.06-45 0: Warn and continue operation 1: Fault and ramp to stop 2: Fault and coast to stop 3: No warning	
Reset Method		Manual reset	
Reset Condition		Immediately reset	
Record		When Pr.06-45 = 1 or 2, oPL3 is a “Fault”, and the fault is recorded.	
Cause		Corrective Actions	
Unbalanced three-phase impedance of the motor		Replace the motor.	
Check if the wiring is incorrect		Check the cable and replace it if necessary.	
Check if the motor is a single-phase motor		Choose a three-phase motor.	
Check if the current sensor is broken		Check if the control board cable is loose. If yes, reconnect the cable and run the drive to test. If the fault still exists, return to the factory for repair. Check if the three-phase current is balanced with a current clamp meter. If the current is balanced and the oPL3 fault still exists, return to the factory for repair.	
Check if the drive capacity is larger than the motor capacity		Choose the drive that matches the motor capacity	

ID	Display on LCD Keypad	Fault Name	Fault Descriptions
87	oL3	Power module overload (oL3)	The load almost reaches the upper limit of the power module
Action and Reset			
Action Condition		Software detection	
Action Time		Immediately act	
Fault Treatment Parameter		N/A	
Reset Method		Manual reset	
Reset Condition		Immediately reset	
Record		Yes	
Cause		Corrective Actions	
The power module overloads		1. Decrease the drive's load. 2. Lower the carrier frequency (Pr.00-17) 3. Lower the drive's operation ambient temperature 4. Lower the current limit 5. Choose the drive with a larger power model 6. Increase acceleration time 7. Decrease the output voltage for low-frequency operation in V/F control mode.	

ID	Display on LCD Keypad	Fault Name	Fault Descriptions
89	roPd	Rotor position detection error (roPd)	Rotor position detection error protection
Action and Reset			
Action Condition		Software detection	
Action Time		Immediately act	
Fault Treatment Parameter		N/A	
Reset Method		Manual reset	
Reset Condition		Immediately reset	
Record		Yes	
Cause		Corrective Actions	
Check if the motor cable is abnormal or broken		Check or replace the cable.	
Motor coil error		Replace the motor.	
Hardware failure		IGBT broken. Return to the factory for repair.	
Drive’s current feedback line error		Cycle the power. If roPd still occurs during operation, return to the factory for repair.	

ID	Display on LCD Keypad	Fault Name	Fault Descriptions
101	CGdE	CANopen guarding error (CGdE)	CANopen guarding error
Action and Reset			
Action Condition		When CANopen Node Guarding detects that one of the slaves does not respond, the CgdE fault occurs. The upper unit sets the factor and time during configuration.	
Action Time		The time that the upper unit sets during configuration	
Fault Treatment Parameter		N/A	
Reset Method		Manual reset	
Reset Condition		The upper unit sends a reset package to clear this fault.	
Record		Yes	
Cause		Corrective Actions	
The guarding time is too short, or less detection times		Increase the guarding time (Index 100C) and detection times	
Malfunction caused by interference		1. Verify the wiring and grounding of the communication circuit. It is recommended to separate the communication circuit from the main circuit, or wire in 90 degree for effective anti-interference performance. 2. Make sure the communication circuit is wired in series. 3. Use CANopen cable or add terminating resistance.	
Communication cable is broken or bad connected		Check or replace the communication cable.	

ID	Display on LCD Keypad	Fault Name	Fault Descriptions
102	CHbE	CANopen heartbeat error (CHbE)	CANopen heartbeat error
Action and Reset			
Action Condition		When CANopen Heartbeat detects that one of the slaves does not respond, the ChbE fault occurs. The upper unit sets the confirming time of producer and consumer during configuration.	
Action Time		The confirming time that the upper unit sets for producer and consumer during configuration.	
Fault Treatment Parameter		N/A	
Reset Method		Manual reset	
Reset Condition		The upper unit sends a reset package to clear this fault	
Record		Yes	
Cause		Corrective Actions	
The heartbeat time is too short		Increase heartbeat time (Index 100C).	
Malfunction caused by interference		1. Verify the wiring and grounding of the communication circuit. It is recommended to separate the communication circuit from the main circuit, or wire in 90 degree for effective anti-interference performance. 2. Make sure the communication circuit is wired in series. 3. Use CANopen cable or add terminating resistance.	
Communication cable is broken or bad connected		Check or replace the communication cable.	

ID	Display on LCD Keypad	Fault Name	Fault Descriptions
104	CbFE	CANopen bus off error (CbFE)	CANopen bus off error

Action and Reset		
Action Condition	Hardware	When CANopen card is not installed, the CbFE fault occurs.
	Software	When the master receives wrong communication package, the CbFE fault occurs. Too much interference on BUS The master receives wrong package when the CAN_H and CAN_L communication cables are short, CbFE fault occurs.
Action Level	Immediately act	
Fault Treatment Parameter	N/A	
Reset Method	Manual reset	
Reset Condition	Cycle the power	
Record	Yes	

Cause	Corrective Actions
Check if the CANopen card is installed	Make sure the CANopen card is installed.
Check if the CANopen speed is correct	Reset CANopen speed (Pr.09-37).
Malfunction caused by interference	1. Verify the wiring and grounding of the communication circuit. It is recommended to separate the communication circuit from the main circuit, or wire in 90 degree for effective anti-interference performance. 2. Make sure the communication circuit is wired in series. 3. Use CANopen cable or add terminating resistance.
Communication cable is broken or bad connected	Check or replace the communication cable.

ID	Display on LCD Keypad	Fault Name	Fault Descriptions
105	CidE	CANopen index error (CidE)	CANopen index error
Action and Reset			
Action Condition		Software detection	
Action Time		Immediately act	
Fault Treatment Parameter		N/A	
Reset Method		Manual reset	
Reset Condition		The upper unit sends a reset package to clear this fault	
Record		Yes	
Cause		Corrective Actions	
Incorrect setting of CANopen index		Reset CANopen Index (Pr.00-02 = 7)	

ID	Display on LCD Keypad	Fault Name	Fault Descriptions
106	CAdE	CANopen station address error (CAdE)	CANopen station address error (only supports 1–127)
Action and Reset			
Action Condition		Software detection	
Action Time		Immediately act	
Fault Treatment Parameter		N/A	
Reset Method		Manual reset (Pr.00-02 = 7)	
Reset Condition		N/A	
Record		Yes	
Cause		Corrective Actions	
Incorrect setting of CANopen station address		1. Disable CANopen (Pr.09-36 = 0) 2. Reset CANopen (Pr.00-02 = 7) 3. Reset CANopen station address (Pr.09-36)	

ID	Display on LCD Keypad	Fault Name	Fault Descriptions
107	CFrE	CANopen index setting exceed limit (CFrE)	CANopen memory error
Action and Reset			
Action Condition		When you update the firmware version of the control board, the FRAM internal data does not change, then CFrE fault occurs.	
Action Time		Immediately act	
Fault Treatment Parameter		N/A	
Reset Method		Manual reset	
Reset Condition		Pr.00-02 = 7	
Record		Pr.00-21 = 3, the fault is recorded	
Cause		Corrective Actions	
CANopen internal memory error		1. Disable CANopen (Pr.09-36 = 0). 2. Reset CANopen (Pr.00-02 = 7). 3. Reset CANopen station address (Pr.09-36).	

ID	Display on LCD Keypad	Fault Name	Fault Descriptions
121	CP20	Internal communication error (CP20)	Internal communication time-out
Action and Reset			
Action Condition		Software detection	
Action Time		Immediately act	
Fault Treatment Parameter		N/A	
Reset Method		N/A	
Record		Yes	
Cause		Corrective Actions	
Internal communication error		Contact your local distributor or Delta.	

ID	Display on LCD Keypad	Fault Name	Fault Descriptions
123	CP22	Internal communication error (CP22)	Abnormal internal communication
Action and Reset			
Action Condition		Software detection	
Action Time		Immediately act	
Fault Treatment Parameter		N/A	
Reset Method		N/A	
Record		Yes	
Cause		Corrective Actions	
Internal communication error		Contact your local distributor or Delta.	

ID	Display on LCD Keypad	Fault Name	Fault Descriptions
124	CP30	Internal communication error (CP30)	Abnormal internal communication
Action and Reset			
Action Condition		Software detection	
Action Time		Immediately act	
Fault Treatment Parameter		N/A	
Reset Method		N/A	
Record		Yes	
Cause		Corrective Actions	
Internal communication error		Contact your local distributor or Delta.	

ID	Display on LCD Keypad	Fault Name	Fault Descriptions
126	CP32	Internal communication error (CP32)	Abnormal internal communication
Action and Reset			
Action Condition		Software detection	
Action Time		Immediately act	
Fault Treatment Parameter		N/A	
Reset Method		N/A	
Record		Yes	
Cause		Corrective Actions	
Internal communication error		Contact your local distributor or Delta.	

ID	Display on LCD Keypad	Fault Name	Fault Descriptions
127	CP33	Internal communication error (CP33)	Abnormal internal communication
Action and Reset			
Action Condition		Software detection	
Action Time		Immediately act	
Fault Treatment Parameter		N/A	
Reset Method		N/A	
Record		Yes	
Cause		Corrective Actions	
Internal communication error		Contact your local distributor or Delta.	

ID	Display on LCD Keypad	Fault Name	Fault Descriptions
128	ot3	Over-torque 3 (ot3)	When the output current exceeds the over-torque detection level (Pr.14-75) and exceeds over-torque detection time (Pr.14-76), and when Pr.14-74 is set to 2 or 4, the ot3 error displays.

Action and Reset		
Action Condition	Pr.14-75	
Action Time	Pr.14-76	
Fault Treatment Parameter	Pr.14-74 0: No function 1: Continue operation after over-torque detection during constant speed operation 2: Stop after over-torque detection during constant speed operation 3: Continue operation after over-torque detection during RUN 4: Stop after over-torque detection during RUN	
Reset Method	Auto	When Pr.14-74 = 1 or 3, ot3 is a “Warning”. The warning is automatically cleared when the output current < Pr.14-75.
	Manual	When Pr.14-74 = 2 or 4, ot3 is a “Fault”. You must reset manually.
Reset Condition	Immediately reset	
Record	Pr.14-74 = 2 or 4, ot3 is a “Fault”, and the fault is recorded.	

Cause	Corrective Actions
Incorrect parameter setting	Reset Pr.14-75 and Pr.14-76.
Mechanical failure (e.g. over-torque, mechanical lock)	Remove the causes of malfunction.
The load is too large	Reduce the load. Replace the motor with a larger capacity model.
Accel./ Decel. time and working cycle are too short	Increase the setting for Pr.01-12–Pr.01-19 (accel./ decel. time).
V/F voltage is too high	Adjust the V/F curve (Motor 3, Pr.01-54–01-61), especially the setting value for the mid-point voltage (if the mid-point voltage is set too low, the load capacity decreases at low speed).
The motor capacity is too small	Replace the motor with a larger capacity model.
Overload during low-speed operation	Decrease low-speed operation time. Increase the motor capacity.
Torque compensation is too large	Adjust the torque compensation (refer to Pr.07-73 torque compensation gain) until the current reduces and the motor does not stall.
Improper parameter settings for speed tracking function (including restart after momentary power loss and restart after fault)	1. Correct the parameter settings for speed tracking. 2. Start the speed tracking function. 3. Adjust the maximum current for Pr.07-09 speed tracking.

ID	Display on LCD Keypad	Fault Name	Fault Descriptions
129	ot4	Over-torque 4 (ot4)	When the output current exceeds the over-torque detection level (Pr.14-78) and exceeds over-torque detection time (Pr.14-79), and when Pr.14-77 is set to 2 or 4, the ot4 error displays.

Action and Reset		
Action Condition	Pr.14-78	
Action Time	Pr.14-79	
Fault Treatment Parameter	Pr.14-77 0: No function 1: Continue operation after over-torque detection during constant speed operation 2: Stop after over-torque detection during constant speed operation 3: Continue operation after over-torque detection during RUN 4: Stop after over-torque detection during RUN	
Reset Method	Auto	When Pr.14-77 = 1 or 3, ot4 is a “Warning”. The warning is automatically cleared when the output current < Pr.14-78.
	Manual	When Pr.14-77 = 2 or 4, ot4 is a “Fault”. You must reset manually.
Reset Condition	Immediately reset	
Record	Pr.14-77 = 2 or 4, ot4 is a “Fault”, and the fault is recorded.	

Cause	Corrective Actions
Incorrect parameter setting	Configure the settings for Pr.14-78 and Pr.14-79 again.
Mechanical failure (e.g. over-torque, mechanical lock)	Remove the causes of malfunction.
The load is too large	Reduce the load. Replace the motor with a larger capacity model.
Accel./ Decel. time and working cycle are too short	Increase the setting values for Pr.01-12–Pr.01-19 (accel./ decel. time).
V/F voltage is too high	Adjust the V/F curve (Motor 4, Pr.01-63–01-70), especially the setting value for the mid-point voltage (if the mid-point voltage is set too low, the load capacity decreases at low speed).
The motor capacity is too small	Replace the motor with a larger capacity model.
Overload during low-speed operation	Decrease low-speed operation time. Increase the motor capacity.
Torque compensation is too large	Adjust the torque compensation (refer to Pr.07-75 torque compensation gain) until the current reduces and the motor does not stall.
Improper parameter settings for speed tracking function (including restart after momentary power loss and restart after fault)	1. Correct the parameter settings for speed tracking. 2. Start the speed tracking function. 3. Adjust the maximum current for Pr.07-09 speed tracking.

ID	Display on LCD Keypad	Fault Name	Fault Descriptions
134	EoL3	Internal communication error (EoL3)	Electronic thermal relay 3 protection. The drive coasts to stop once it activates.
Action and Reset			
Action Condition		Start counting when output current > 105% of the motor 3 rated current.	
Action Time		Pr.14-81 (If the output current is larger than 105% of the motor 3 rated current again within 60 sec., the counting time reduces and is less than Pr.14-81)	
Fault Treatment Parameter		N/A	
Reset Method		Manual reset	
Reset Condition		Reset in five seconds after the fault is cleared	
Record		Yes	
Cause		Corrective Actions	
The load is too large		Reduce the load.	
Accel. /Decel. time or the working cycle are too short		Increase the setting value for Pr.01-12–01-19 (accel./ decel. time).	
V/F voltage is too high		Adjust the settings for Pr.01-54–01-61 (V/F curve), especially the setting value for the mid-point voltage (if the mid-point voltage is set too low, the load capacity decreases at low speed).	
Overload during low-speed operation. When using a general motor, even it operates below rated current, an overload may still occur during low-speed operation.		Decrease low-speed operation time. Replace the drive with a dedicated to VFD model. Increase the motor capacity.	
When using VFD dedicated motor, Pr.06-13=0 (electronic thermal relay selection motor 1 = inverter motor)		Pr.14-80 = 1 electronic thermal relay selection motor 1 = standard motor (motor with fan on the shaft).	
Incorrect value of electronic thermal relay		Reset to the correct motor rated current.	
The maximum motor frequency is set too low		Reset to the correct motor rated frequency.	
One drive to multiple motors		Set Pr.14-80 electronic thermal relay 3 selection = 2 disable, and install thermal relay on each motor.	
Check if the setting for stall prevention is correct.		Set the stall prevention to the proper value.	
Torque compensation is too large		Adjust the torque compensation (refer to Pr.07-73 torque compensation gain) until the current reduces and the motor does not stall.	
Motor fan error		Check the status of the fan, or replace the fan.	
Unbalanced three-phase impedance of the motor		Replace the motor.	

ID	Display on LCD Keypad	Fault Name	Fault Descriptions
135	EoL4	Internal communication error (EoL4)	Electronic thermal relay 4 protection. The drive coasts to stop once it activates.
Action and Reset			
Action Condition		Start counting when the output current > 105% of the motor 4 rated current.	
Action Time		Pr.14-83 (If the output current is larger than 105% of motor 4 rated current again within 60 sec., the counting time reduces and is less than Pr.14-83)	
Fault Treatment Parameter		N/A	
Reset Method		Manual reset	
Reset Condition		Reset in five seconds after the fault is cleared	
Record		Yes	
Cause		Corrective Actions	
The load is too large		Reduce the load.	
Accel. /Decel. time or the working cycle are too short		Increase the setting value for Pr.01-12–01-19 (accel./ decel. time).	
V/F voltage is too high		Adjust the settings for Pr.01-62–01-70 (V/F curve), especially the setting value for the mid-point voltage (if the mid-point voltage is set too low, the load capacity decreases at low speed).	
Overload during low-speed operation. When using a general motor, even it operates below rated current, an overload may still occur during low-speed operation.		Decrease low-speed operation time. Replace the drive with a dedicated to VFD model. Increase the motor capacity.	
When using VFD dedicated motor, Pr.06-13 = 0 (electronic thermal relay selection motor 1 = inverter motor)		Pr.14-82 = 1 electronic thermal relay selection motor 1 = standard motor (motor with fan on the shaft).	
Incorrect value of electronic thermal relay		Reset to the correct motor rated current.	
The maximum motor frequency is set too low		Reset to the correct motor rated frequency.	
One drive to multiple motors		Set Pr.14-82 electronic thermal relay 4 selection = 2 disable, and install thermal relay on each motor.	
Check if the setting for stall prevention is correct.		Set the stall prevention to the proper value.	
Torque compensation is too large		Adjust the torque compensation (refer to Pr.07-75 torque compensation gain) until the current reduces and the motor does not stall.	
Motor fan error		Check the status of the fan, or replace the fan.	
Unbalanced three-phase impedance of the motor		Replace the motor.	

ID	Display on LCD Keypad	Fault Name	Fault Descriptions
140	Hd6	oc hardware error (Hd6)	GFF hardware protection error when power is ON.
Action and Reset			
Action Condition		Hardware detection	
Action Time		Immediately act when the fault is detected	
Fault Treatment Parameter		N/A	
Reset Method		Power-off	
Reset Condition		N/A	
Record		Yes	
Cause		Corrective Actions	
Hardware failure		Cycle the power. If Hd6 still exists, return to the factory for repair.	

ID	Display on LCD Keypad	Fault Name	Fault Descriptions
141	b4GFF	GFF occurs before run (b4GFF)	The ground short circuit detected when the output wiring detection is performed before the drive runs.
Action and Reset			
Action Condition		250% of the rated current	
Action Time		Immediately act	
Fault Treatment Parameter		N/A	
Reset Method		Manual reset	
Reset Condition		Reset in five seconds after the fault is cleared	
Record		Yes	
Cause		Corrective Actions	
Incorrect wiring for the motor		Check if the motor's internal wiring and the UVW wiring of the drive output terminal are correct.	
Short-circuit at motor output due to poor insulation wiring		Check the motor cable and remove causes of the short circuits, or replace the cable before turning on the power.	
Check for possible burnout or aging insulation of the motor		Check the motor insulation value with megger. Replace the motor if the insulation is poor.	

ID	Display on LCD Keypad	Fault Name	Fault Descriptions
142	AuE1	Auto-tune error 1 (AuE1)	No feedback current error when the motor parameter automatically detects
Action and Reset			
Action Condition		Software detection	
Action Time		Immediately act	
Fault Treatment Parameter		N/A	
Reset Method		Manual reset	
Reset Condition		Immediately reset	
Record		Yes	
Cause		Corrective Actions	
Motor is not wired		Wire the motor correctly	
The electromagnetic contactor is used as an open state on the output side of the drive (U/V/W).		Check if the electromagnetic valve is closed.	

ID	Display on LCD Keypad	Fault Name	Fault Descriptions
143	AuE2	Auto-tune error 2 (AuE2)	Motor phase loss error when the motor parameter automatically detects

Action and Reset	
Action Condition	Software detection
Action Time	Immediately act
Fault Treatment Parameter	N/A
Reset Method	Manual reset
Reset Condition	Immediately reset
Record	Yes
Cause	**Corrective Actions**
Incorrect motor wiring	Wire the motor correctly.
Motor error	Check if the motor works normally.
The electromagnetic contactor is used as an open state on the output side of the drive (U/V/W).	Verify that the three-phases of the electromagnetic valve are all closed.
Motor U/V/W wire error	Check if the wires are broken.

ID	Display on LCD Keypad	Fault Name	Fault Descriptions
144	AuE3	Auto-tune error 3 (AuE3)	No load current I_0 measurement error when the motor parameter automatically detects.
Action and Reset			
Action Condition		Software detection	
Action Time		Immediately act	
Fault Treatment Parameter		N/A	
Reset Method		Manual reset	
Reset Condition		Immediately reset	
Record		Yes	
Cause		Corrective Actions	
Incorrect settings for the motor parameter (rated current)		Check the settings for Pr.05-01 / Pr.05-13 / Pr.05-34.	
Motor error		Check if the motor works normally.	

ID	Display on LCD Keypad	Fault Name	Description
149	AuE5	Auto-tune error 5 (AuE5)	The rotor resistance measuring error when the motor parameter automatically detects.
Action and Reset			
Action Condition		Software detection	
Action Time		Immediately act	
Fault Treatment Parameter		N/A	
Reset Method		Manual reset	
Reset Condition		Immediately reset	
Record		Yes	
Cause		Corrective Actions	
The motor is not wired		Wire the motor correctly.	
Motor error		Check if the motor works normally.	

Chapter 15 CANopen Overview

15-1 CANopen Overview

15-2 Wiring for CANopen

15-3 CANopen Communication Interface Descriptions

15-4 CANopen Supported Index

15-5 CANopen Fault Codes

15-6 CANopen LED Function

The built-in CANopen function is a kind of remote control. You can control the AC motor drive using the CANopen protocol. CANopen is a CAN-based higher layer protocol that provides standardized communication objects, including real-time data (Process Data Objects, PDO), configuration data (Service Data Objects, SDO), and special functions (Time Stamp, Sync message, and Emergency message). It also has network management data, including Boot-up message, NMT message, and Error Control message. Refer to the CiA website http://www.can-cia.org/ for details.

Delta CANopen supported functions:

- Supports CAN2.0A Protocol
- Supports CANopen DS301 V4.02
- Supports DSP-402 V2.0

Delta CANopen supported services:

- PDO (Process Data Objects): PDO1–PDO4
- SDO (Service Data Objects):
  Initiate SDO Download;
  Initiate SDO Upload;
  Abort SDO;
  You can use the SDO message to configure the slave node and access the Object Dictionary in every node.
- SOP (Special Object Protocol):
  Supports default COB-ID in Predefined Master/Slave Connection Set in DS301 V4.02;
  Supports SYNC service;
  Supports Emergency service.
- NMT (Network Management):
  Supports NMT module control;
  Supports NMT Error control;
  Supports Boot-up.

Delta CANopen does not support this service:

- Time Stamp service

15-1 CANopen Overview

CANopen Protocol

CANopen is a CAN-based higher layer protocol, and was designed for motion-oriented machine control networks such as handling systems. Version 4.02 of CANopen (CiA DS301) is standardized as EN50325-4. The CANopen specifications cover the application layer and communication profile (CiA DS301), as well as a framework for programmable devices (CiA DS302), recommendations for cables and connectors (CiA DS303-1) and SI units and prefix representations (CiA DS303-2).

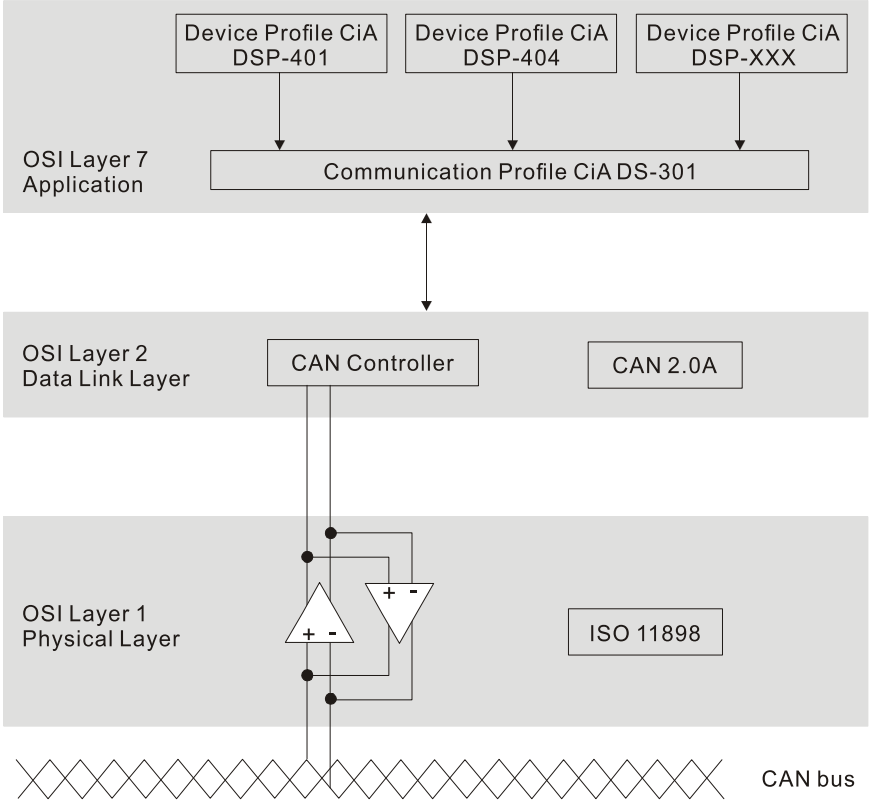

RJ45 Pin Definition

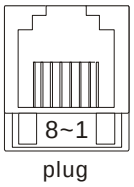

PIN	Signal	Description
1	CAN_H	CAN_H bus line (dominant high)
2	CAN_L	CAN_L bus line (dominant low)
3	CAN_GND	Ground / 0 V / V-
6	CAN_GND	Ground / 0 V / V-

CANopen Communication Protocol

CANopen communication protocol contains the following services:

- NMT (Network Management Object)
- SDO (Service Data Objects)
- PDO (Process Data Objects)
- EMCY (Emergency Object)

NMT (Network Management Object)

The Network Management (NMT) follows a Master/Slave structure for executing NMT service. A network has only one NMT master, and the other nodes are slaves. All CANopen nodes have a present NMT state, and the NMT master can control the state of the slave nodes. The following shows the state diagram of a node:

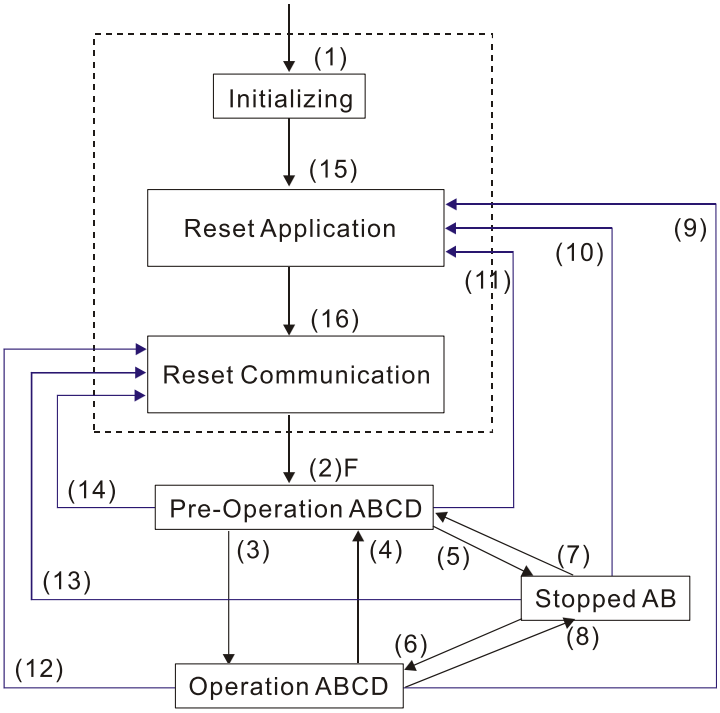

(1) After power is applied, start in the auto-initialization state
(2) Automatically enter the pre-operational state
(3) (6) Start remote node
(4) (7) Enter the pre-operational state
(5) (8) Stop remote node
(9) (10) (11) Reset node
(12) (13) (14) Reset communication
(15) Automatically enter the reset application state
(16) Automatically enter the reset communication state

A: NMT
B: Node Guard
C: SDO
D: Emergency
E: PDO
F: Boot-up

Service	Initializing	Pre-Operational	Operational	Stopped
PDO			○	
SDO		○	○	
SYNC		○	○	
Time Stamp		○	○	
EMCY		○	○	
Boot-up	○			
NMT		○	○	○

SDO (Service Data Objects)

Use SDO to access the Object Dictionary in every CANopen node using the Client/Server model. One SDO has two COB-IDs (request SDO and response SDO) to upload or download data between two nodes. There is no data limit for SDOs to transfer data, but it must transfer data by segment when the data exceeds four bytes with an end signal in the last segment. However, MS300 series does not support transferring data by segment.

The Object Dictionary (OD) is a group of objects in a CANopen node. Every node has an OD in the system, and OD contains all parameters describing the device and its network behavior. The access path in the OD is the index and sub-index; each object has a unique index in the OD, and has a sub-index if necessary.

Type		Data 0								Data 1	Data 2	Data 3	Data 4	Data 5	Data 6	Data 7
		7	6	5	4	3	2	1	0	Index	Index	Index	Data	Data	Data	Data
		command								L	H	Sub	LL	LH	HL	HH
Domain Download	Client	0	0	1	-	N		E	S							
	Server	0	1	1	-	-	-	-	-							
Domain Upload	Client	0	1	0	-	-	-	-	-							
	Server	0	1	0	-	N		E	S							
Abort Domain Transfer	Client	1	0	0	-	-	-	-	-							
	Server	1	0	0	-	-	-	-	-							

N: Bytes not used; E: normal (0) / transferred (1); S: data size

PDO (Process Data Objects)

PDO communication can be described by the producer/consumer model. Each node of the network listens to the messages of the transmission node and distinguishes whether the message has to be processed or not after receiving the message. A PDO can be transmitted from one device to one another device or to many other devices. Every PDO has two PDO services: a TxPDO and an RxPDO. PDOs are transmitted in a non-confirmed mode. All transmission types are listed in the following table

Type Number	PDO				
	Cyclic	Acyclic	Synchronous	Asynchronous	RTR only
0		○	○		
1–240	○		○		
241–251	Reserved				
252			○		○
253				○	○
254				○	
255				○	

- Type number 1–240 indicates the number of SYNC message between two PDO transmissions.
- Type number 252 indicates the data is updated (but not sent) immediately after receiving SYNC.
- Type number 253 indicates the data is updated immediately after receiving RTR.
- Type number 254: Delta CANopen does not support this transmission format.
- Type number 255 indicates the data is an asynchronous transmission.

All PDO transmission data must be mapped to the index with Object Dictionary.

EMCY (Emergency Object)

When errors occur inside the hardware, an emergency object is triggered. An emergency object is only sent when an error occurs. As long as there is nothing wrong with the hardware, there is no emergency object warning of an error message.

15-2 Wiring for CANopen

Use an external CANopen communication card CMM-COP01 for CANopen wiring to connect the CANopen to the MS300 drive. The link uses an RJ45 cable. You must wire the two farthest ends with 120 Ω terminating resistors as shown in the picture below.

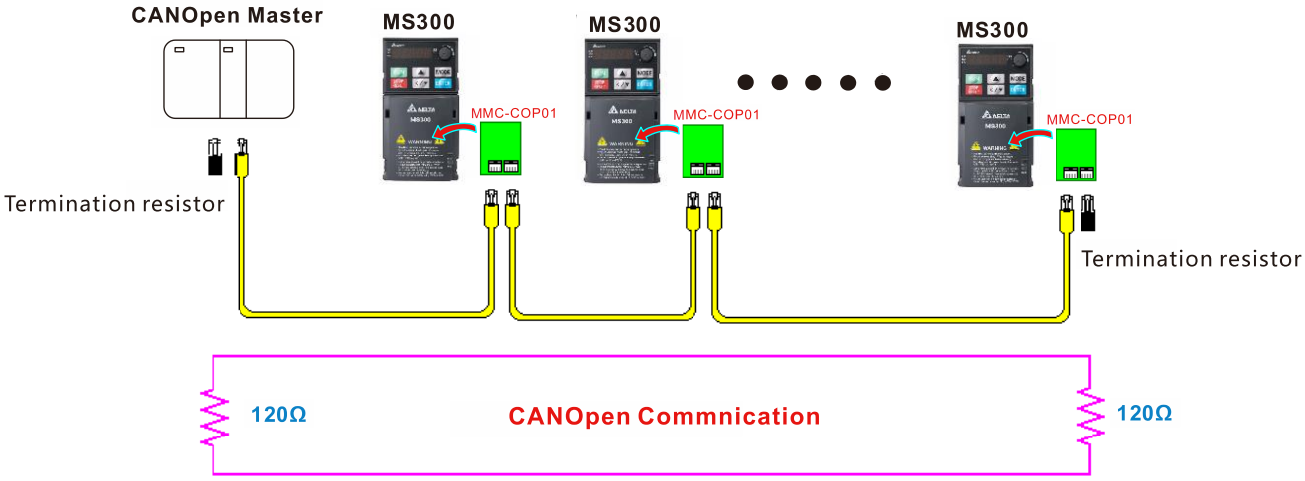

15-3 CANopen Communication Interface Descriptions

15-3-1 CANopen Control Mode Selection

There are two control modes for CANopen: the DS402 standard (Pr.09-40 = 1) is the default, and the Delta's standard setting (Pr.09-40 = 0). There are two control modes according to Delta's standard. One is the old control mode (Pr.09-30 = 0); this control mode can only control the motor drive under the frequency control. The other mode is a new standard (Pr.09-30 = 1); this new control mode allows the motor drive to be controlled under all kinds of modes. The MS300 currently supports the speed mode. For torque, position and home mode, refer to MH300 series. The following table shows the control mode definitions:

CANopen Control Mode	Control Mode	
	Speed	
	Index	Description
DS402 Standard Pr.09-40 = 1	6042-00	Target rotating speed (rpm)
	-----	-----
Delta Standard (Old definition) Pr.09-40 = 0, Pr.09-30 = 0	2020-02	Target rotating speed (Hz)
Delta Standard (New definition) Pr.09-40 = 0, Pr.09-30 = 1	2060-03	Target rotating speed (Hz)
	2060-04	Torque limit (%)

CANopen Control Mode	Operation Control	
	Index	Description
DS402 Standard Pr.09-40 = 1	6040-00	Operation Command
	-----	-----
Delta Standard (Old definition) Pr.09-40 = 0, Pr.09-30 = 0	2020-01	Operation Command
Delta Standard (New definition) Pr.09-40 = 0, Pr.09-30 = 1	2060-01	Operation Command
	-----	-----

CANopen Control Mode	Others	
	Index	Description
DS402 Standard Pr.09-40 = 1	605A-00	Quick stop processing mode
	605C-00	Disable operation processing mode
Delta Standard (Old definition) Pr.09-40 = 0, Pr.09-30 = 0	-----	-----
Delta Standard (New definition) Pr.09-40 = 0, Pr.09-30 = 1	-----	-----
	-----	-----

You can use some indices in either DS402 or Delta's standard. For example:

1. Indices that are defined as RO attributes.
2. The corresponding index of available parameter groups: (2000–200B-XX)
3. Acceleration/Deceleration Index: 604F 6050

15-3-2 DS402 Standard Control Mode

15-3-2-1 Related settings for an AC motor drive (following the DS402 standard)

If you want to use the DS402 standard to control the motor drive, follow these steps:

1. Wire the hardware (refer to Section 15-2 Wiring for CANopen).
2. Set the operation source: set Pr.00-21 to 3 for CANopen communication card control.
3. Set the frequency source: set Pr.00-20 to 6. Choose the source for the Frequency command from the CANopen setting.
4. Set DS402 as the control mode: Pr.09-40 = 1
5. Set the CANopen station: set Pr.09-36; the range is among 1–127. When Pr.09-36 = 0, the CANopen slave function is disabled. Note that if an error appears (station address error CAdE or CANopen memory error CFrE) when you finish the station setting, set Pr.00-02 = 7 to reset.
6. Set the CANopen baud rate: set Pr.09-37 (CANBUS baud rate: 1 Mbps (0), 500 Kbps (1), 250 Kbps (2), 125 Kbps (3), 100 Kbps (4) or 50 Kbps (5)).
7. Set the multiple input functions to Quick Stop. You can also choose to enable or disable; the default setting is disabled. If it is necessary to enable the function, set MI terminal to 53 in one of the following parameters: Pr.02-01–02-07. Note that this function is available in DS402 only.

15-3-2-2 The status of the motor drive (following the DS402 standard)

According to the DS402 definition, the motor drive is divided into 3 blocks and 9 statuses as described below.

3 Blocks

- Power Disable: without PWM output
- Power Enable: with PWM output
- Fault: one or more errors have occurred.

9 Statuses

- Start: power on
- Not Ready to Switch On: the motor drive is initiating.
- Switch On Disable: occurs when the motor drive finishes initiating.
- Ready to Switch On: warming up before running.
- Switch On: the motor drive has the PWM output, but the reference command is not effective.
- Operation Enable: able to control normally.
- Quick Stop Active: when there is a Quick Stop request, stop running the motor drive.
- Fault Reaction Active: the motor drive detects conditions which might trigger error(s).
- Fault: one or more errors have occurred in the motor drive.

When the motor drive turns on and finishes the initiation, it remains in Ready to Switch On status. To control the operation of the motor drive, change to Operation Enable status. To do this, set the control word's bit0–bit3 and bit7 of the Index 6040H and pair with Index Status Word (Status Word 0X6041). The control steps and index definition are described below.

Index 6040:

15–9	8	7	6–4	3	2	1	0
Reserved	Halt	Fault Reset	Operation	Enable operation	Quick Stop	Enable Voltage	Switch On

Index 6041:

15–14	13–12	11	10	9	8	7	6	5	4	3	2	1	0
Reserved	Operation	Internal limit active	Target reached	Remote	Reserved	Warning	Switch on disabled	Quick stop	Voltage enabled	Fault	Operation enable	Switch on	Ready to switch on

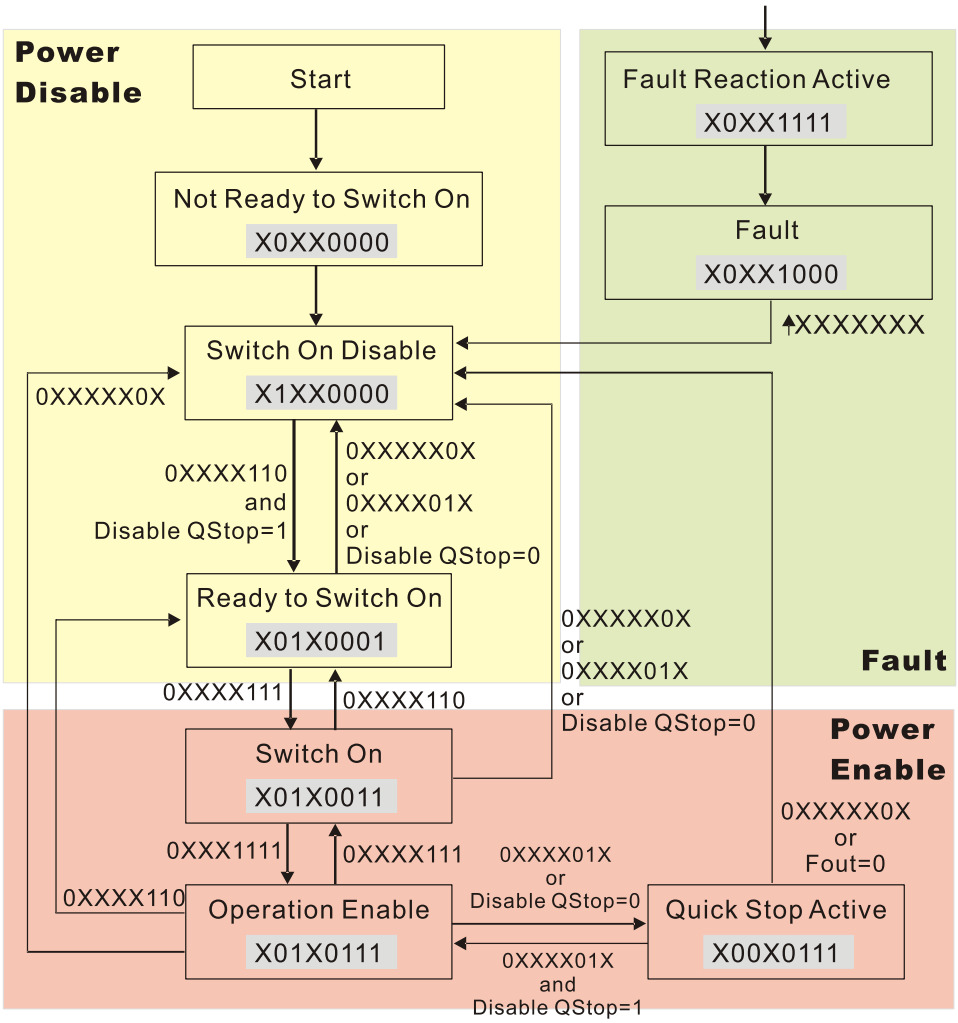

Set command 6040 = 0xE, and then set another command 6040 = 0xF. Then you can switch the motor drive to Operation Enable. The Index 605A determines the direction of the lines from Operation Enable when the control mode changes from Quick Stop Active. When the setting value is 5–7, both direction lines are active, but when the setting value of 605A is not 1–3, once the motor drive is switched to Quick Stop Active, it is not able to switch back to Operation Enable...

Index	Sub	Definition	Default	R/W	Size	Unit	PDO Map	Mode	note
605Ah	0	Quick stop option code	2	RW	S16		No		0: Disable drive function
									1: Slow down on slow down ramp
									2: Slow down on quick stop ramp
									5: Slow down on slow down ramp and stay in Quick Stop
									6: Slow down on quick stop ramp and stay in Quick Stop
									7: Slow down on the current limit and stay in Quick stop

When the control block switches from Power Enable to Power Disable, use 605C to define the stop method.

Index	Sub	Definition	Default	R/W	Size	Unit	PDO Map	Mode	note
605Ch	0	Disable operation option code	1	RW	S16		No		0: Disable drive function 1: Slow down with slow down ramp; disable the drive function.

15-3-2-3 Various mode control method (following the DS402 standard)

MS300 supports the speed control mode. The speed control mode is described below.

Speed mode:

1. Set MS300 to the speed control mode: set Index6060 to 2.
2. Switch to Operation Enable mode: set 6040 = 0xE, and then set 6040 = 0xF.
3. Set the target frequency: set target frequency for 6042. Since the operation unit of 6042 is rpm, a conversion is required.

   $$n = f \times \frac{120}{p}$$

   n: rotation speed (rpm) (revolutions/minute)

   P: number of poles of the motor (Pole)

   f: rotation frequency (Hz)

   For example:

   Set 6042H = 1500 (rpm), if the number of poles for the drive is 4 (Pr.05-04, Pr.05-16, Pr.05-67 or Pr.05-73), then the motor drive's operation frequency is 1500 (120/4) = 50 Hz. The 6042 is defined as a signed operation. The plus or minus sign means to rotate clockwise or counter-clockwise.
4. To set acceleration and deceleration: use 604F (Acceleration) and 6050 (Deceleration).
5. Trigger an ACK signal: in the speed control mode, control the bit 6–4 of Index 6040. It is defined below.

	Index 6040			Result
	bit 6	bit 5	bit 4	
Speed mode (Index 6060 = 2)	1	0	1	Locked at the current frequency.
	1	1	1	Run to reach the target frequency.
	Other			Decelerating to 0 Hz.

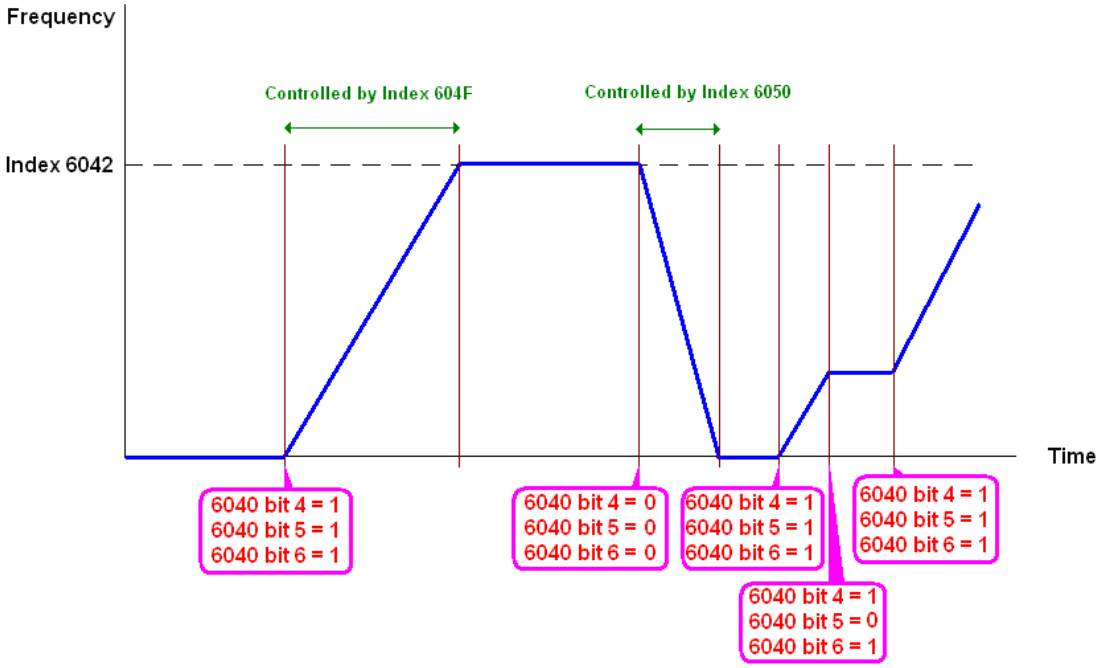

NOTE:

1. Read 6043 to get the current rotation speed (unit: rpm)
2. Read bit 10 of 6041 to check if the rotation speed has reached the targeting value (0: Not reached; 1: Reached).

15-3-3 Using the Delta Standard (Old definition, only supports speed mode)

15-3-3-1 Various mode control method (following the Delta old standard)

If you want to use the Delta old standard to control the motor drive, follow these steps:

1. Wire the hardware (refer to Section 15-2 Wiring for CANopen).
2. Set the operation source: set Pr.00-21 to 3 for CANopen communication card control.
3. Set the frequency source: set Pr.00-20 to 6. Choose the source for the Frequency command from the CANopen setting.
4. Set Delta Standard (Old definition, only supports speed mode) as the control mode: Pr.09-40 = 0 and Pr.09-30 = 0.
5. Set the CANopen station: set Pr.09-36; the range is among 1–127. When Pr.09-36 = 0, the CANopen slave function is disabled. Note that if an error appears (station address error CAdE or CANopen memory error CFrE) when you finish the station setting, set Pr.00-02 = 7 to reset.
6. Set the CANopen baud rate: set Pr.09-37 (CANBUS baud rate: 1 Mbps (0), 500 Kbps (1), 250 Kbps (2), 125 Kbps (3), 100 Kbps (4) and 50 Kbps (5))

15-3-3-2 The control method under speed mode

1. Set the target frequency: set 2020-02, the unit is Hz, with 2 decimal places. For example, 1000 is 10.00 Hz.
2. Operation control: set 2020-01 = 0002H for running, and set 2020-01 = 0001H for stopping.

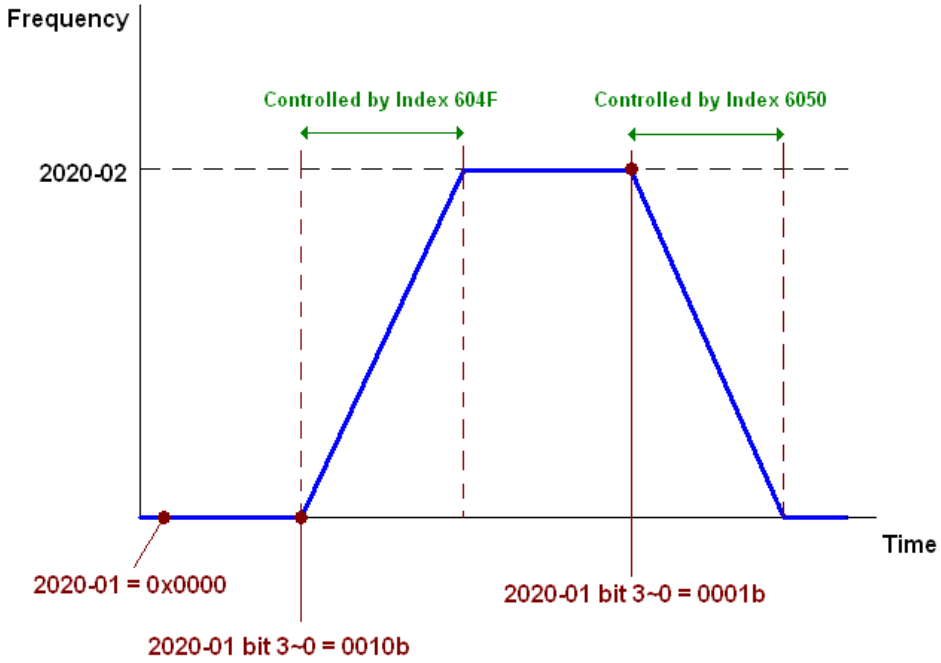

15-3-4 By Using Delta Standard (New Definition)

15-3-4-1 Related settings for an AC motor drive (following the Delta new standard)

If you want to use the Delta new standard to control the motor drive, follow these steps:

1. Wire the hardware (refer to Section 15-2 Wiring for CANopen).
2. Set the operation source: set Pr.00-21 to 3 for CANopen communication card control.
3. Set the frequency source: set Pr.00-20 to 6. Choose the source for the Frequency command from the CANopen setting.
4. Set Delta Standard (New definition) as the control mode: Pr.09-40 = 0 and 09-30 = 1.
5. Set the CANopen station: set Pr.09-36; the range is among 1–127. When Pr.09-36 = 0, the CANopen slave function is disabled. Note that if an error appears (station address error CAdE or CANopen memory error CFrE) when you finish the station setting, set Pr.00-02 = 7 to reset.
6. Set the CANopen baud rate: set Pr.09-37 (CANBUS baud rate: 1 Mbps (0), 500 Kbps (1), 250 Kbps (2), 125 Kbps (3), 100 Kbps (4) and 50 Kbps (5))

15-3-4-2 Various mode control method (Delta New Standard)

Speed Mode:

1. Set MS300 to speed control mode: set index 6060 = 2.
2. Set the target frequency: set 2060-03, unit is Hz, with 2 decimal places. For example, 1000 is 10.00 Hz.
3. Operation control: set 2060-01 = 008H for server on, and set 2060-01 = 0081H for running.

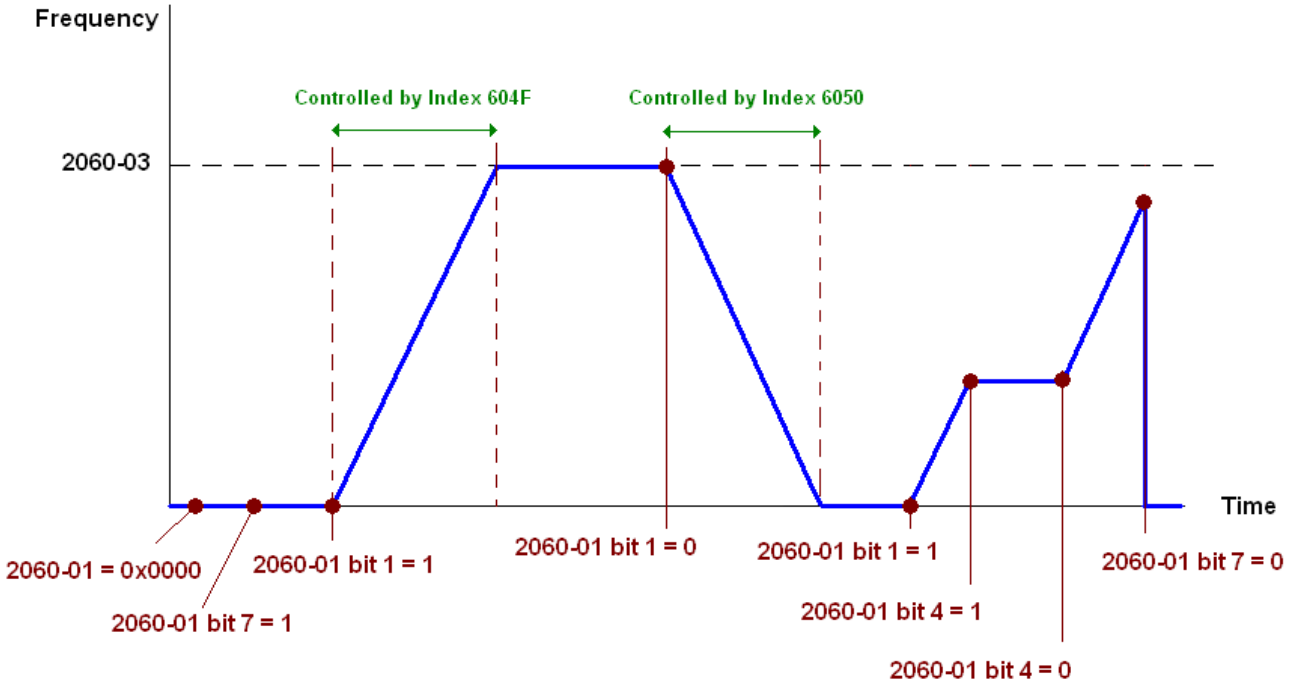

15-3-5 Control DI / DO / AI / AO through CANopen

To control the DO and AO of the motor drive through CANopen, follow these steps:

1. Define the DO to be controlled by CANopen. For example, set Pr.02-13 = 50 to control RY1.
2. Define the AO to be controlled by CANopen. For example, set Pr.03-20 = 20 to control AFM.
3. Control the Index mapped by CANopen. To control DO, use control Index 2026-41. To control AO, use control 2026-A1. To set RY1 as ON, set bit 0 of Index 2026-41 = 1, then RY1 outputs 1. To control AFM output = 50.00%, set Index 2026-A1 = 5000, then AFM outputs 50%.

The following table shows the mapping of CANopen DI / DO / AI / AO:

DI:

Terminal	Related Parameters	R/W	Mapping Index
MI 1	==	RO	2026-01 bit 0
MI 2	==	RO	2026-01 bit 1
MI 3	==	RO	2026-01 bit 2
MI 4	==	RO	2026-01 bit 3
MI 5	==	RO	2026-01 bit 4
MI 6	==	RO	2026-01 bit 5
MI 7	==	RO	2026-01 bit 6

DO:

Terminal	Related Parameters	R/W	Mapping Index
RY	Pr.02-13 = 50	RW	bit 0 of 2026-41 initial value 0x01
MO1	Pr.02-16 = 50	RW	bit 3 of 2026-41 initial value 0x01
MO2	Pr.02-17 = 50	RW	bit 4 of 2026-41 initial value 0x01

AI:

Terminal	Related Parameters	R/W	Mapping Index
AVI	==	RO	Value of 2026-61
ACI	==	RO	Value of 2026-62

AO:

Terminal	Related Parameters	R/W	Mapping Index
AFM	Pr.03-20 = 20	RW	Value of 2026-A1

15-4 CANopen Supported Index

MS300 Supported Parameter Index:

The parameter index corresponds as shown in this example:

Index	**sub-Index**
2000H + Group	Pr. Number+1

For example:

Pr.10-15 (Encoder Stall and Slip Error Action)

Group		Pr. Number
10(0AH)	-	15(0FH)

Index = 2000H + 0AH = 200A

Sub-Index = 0FH + 1H = 10H

MS300 Supported Control Index:

Delta Standard Mode (Old Definition)

Index	Sub	Definition	Default	R/W	Size	Note	
2020H	0	Number	3	R	U8		
	1	Control word	0	RW	U16	bit 1–0	00B: Disable
							01B: Stop
							10B: Disable
							11B: JOG Enable
						bit 3–2	Reserved
						bit 5–4	00B:Disable
							01B: Direction forward
							10B: Direction reverse
							11B: Switch direction
						bit 7–6	00B: 1st step accel. /decel.
							01B: 2nd step accel. /decel.
							10B: 3rd step accel. /decel.
							11B: 4th step accel. /decel.
						bit 11–8	0000B: Master speed
							0001B: 1st step speed
							0010B: 2nd step speed
							0011B: 3rd step speed
							0100B: 4th step speed
							0101B: 5th step speed
							0110B: 6th step speed
							0111B: 7th step speed
							1000B: 8th step speed
							1001B: 9th step speed
							1010B: 10th step speed
							1011B: 11th step speed
							1100B: 12th step speed
							1101B: 13th step speed
							1110B: 14th step speed
							1111B: 15th step speed
						bit 12	1: Enable the function of bit 6–11
						bit 14–13	00B: No function
							01B: Operation command by the digital keypad
							10B: Operation command by Pr.00-21 setting
							11B: Switch the operation command source
						bit 15	Reserved

Index	Sub	Definition	Default	R/W	Size	Note	
2020H	2	Freq. command (XXX.XX Hz)	0	RW	U16		
	3	Other trigger	0	RW	U16	bit 0	1: E.F. ON
						bit 1	1: Reset
						bit2	1: Base Block (B.B) ON
						bit 15–3	Reserved
2021H	0	Number	DH	R	U8		
	1	Error code	0	R	U16	High byte: Warning Code Low Byte: Error Code	
	2	AC motor drive status	0	R	U16	bit 1–0	00B: Stop
							01B: Decelerate to stop
							10B: Waiting for operation command
							11B: In operation
						bit 2	1: JOG command
						bit 4–3	00B: Run forward
							01B: Switch from run in reverse to run forward
							10B: Switch from run forward to run in reverse
							11B: Run in reverse
						bit 7–5	Reserved
						bit 8	1: Master Frequency command controlled by communication interface
						bit 9	1: Master Frequency command controlled by analog signal input
						bit 10	1: Operation command controlled by communication interface
						bit11	1: Parameter lock
						bit12	1: Enable the digital keypad copy parameter function
						bit 15–13	Reserved
	3	Frequency command (XXX.XXHz)	0	R	U16		
	4	Output freq. (XXX.XX Hz)	0	R	U16		
	5	Output current (XX.XA)	0	R	U16		
	6	DC bus voltage (XXX.X V)	0	R	U16		
	7	Output voltage (XXX.X V)	0	R	U16		
	8	The current step run by the multi-step speed command	0	R	U16		
	9	Reserved	0	R	U16		
	A	Display counter value (c)	0	R	U16		
	B	Display output power factor angle (XX.X°)	0	R	U16		
	C	Display output torque (XX.X%)	0	R	U16		
	D	Display motor speed (rpm)	0	R	U16		
	E	Reserved					
	F	Reserved					
	10	Power output (X.XXX kWH)	0	R	U16		
	17	Multi-function display (Pr.00-04)	0	R	U16		
2022H	0	Reserved	0	R	U16		
	1	Display the drive's output current	0	R	U16		
	2	Counter value	0	R	U16		
	3	Actual output frequency (XXX.XX Hz)	0	R	U16		
	4	DC bus voltage (XXX.X V)	0	R	U16		
	5	Output voltage (XXX.X V)	0	R	U16		
	6	Power factor angle (XX.X°)	0	R	U16		

Index	Sub	Definition	Default	R/W	Size	Note	
	7	Display the output power of U, V, W in kW	0	R	U16		
	8	Display the motor speed estimated by the drive or encoder feedback in rpm	0	R	U16		
	9	Display the positive / negative output torque estimated by the drive (+0.0: positive torque; -0.0: negative torque)	0	R	U16		
	A	Reserved					
	B	Display the PID feedback value after enabling the PID function in % ~~(to two decimal places)~~	0	R	U16		
	C	Display the AVI analog input terminal signal, 0–10 V corresponds to 0.00–100.00% (see Explanation 1 in Pr.00-04)	0	R	U16		
	D	Display the ACI analog input terminal signal, 4–20 mA / 0–10 V corresponds to 0.00–100.00% (2.) (see Explanation 2 in Pr.00-04)	0	R	U16		
	F	IGBT temperature of the power module in °C	0	R	U16		
2022H	11	The digital input status (ON / OFF), refer to Pr.02-12 (see Explanation 2 in Pr.00-04)	0	R	U16		
	12	The digital output status (ON / OFF), refer to Pr.02-18 (see Explanation 3 in Pr.00-04)	0	R	U16		
	13	Current step for the multi-step speed operation	0	R	U16		
	14	The corresponding CPU digital input pin status (d.) (see Explanation 3 in Pr.00-04)	0	R	U16		
	15	The corresponding CPU digital output pin status (O.) (see Explanation 4 in Pr.00-04)	0	R	U16		
	16	Reserved					
	17	Pulse input frequency (PG2 of the PG card)	0	R	U16		
	18	Reserved					
	1A	Counter value of overload (0.00–100.00%)	0	R	U16		
	1B	GFF in %	0	R	U16		
	1C	DC bus voltage ripples (Unit: V_{DC})	0	R	U16		
	1D	PLC register D1043 data	0	R	U16		
	1E	Magnetic field area of the synchronous motor	0	R	U16		
	1F	User page displays the value in physical measure	0	R	U16		
	20	Output value of Pr.00-05	0	R	U16		
	21	Reserved					
	22	Reserved					
	23	Reserved					
	24	Control mode of the drive 0: speed mode 1: torque mode	0	R	U16		
	25	Carrier frequency of the drive	0	R	U16		
	26	Reserved					

Index	Sub	Definition	Default	R/W	Size	Note	
2022H	27	Motor status					
	28	Output positive/ negative torque of motor drive calculation					
	29	Torque command					
	2A	kWh display					
	2B	Reserved					
	2C	Reserved					
	2D	Reserved					
	2E	Reserved					
	2F	PID target value					
	30	PID offset					
	31	PID output frequency					

CANopen Remote IO Mapping

Index	Sub	R/W	Definition
2026H	01h	R	Each bit corresponds to different input terminals.
	02h	R	Each bit corresponds to different input terminals.
	03h–40h	R	Reserved
	41h	RW	Each bit corresponds to different output terminals
	42h–60h	R	Reserved
	61h	R	AVI (%)
	62h	R	ACI (%)
	63h	R	Reserved
	64h–A0h	R	Reserved
	A1h	RW	AFM1 (%)

Index 2026-01	bit 0	bit 1	bit 2	bit 3	bit 4	bit 5	bit 6	bit 7	bit8	bit9	bit10	bit11	bit12	bit13	bit14	bit15
DI	MI1	MI2	MI3	MI4	MI5	MI6	MI7									

1: Control broad I/O (Standard)

Delta Standard Mode (New Definition)

Index	sub	R/W	Size	Descriptions			Speed Mode
				bit	Definition	Priority	
2060h	00h	R	U8				
	01h	RW	U16	0	Ack	4	0: fcmd = 0 1: fcmd = Fset (Fpid)
				1	Dir	4	0: FWD run command 1: REV run command
				2			
				3	Halt	3	0: Drive runs until target speed is reached 1: Drive stops by deceleration setting
				4	Hold	4	0: Drive runs until target speed is reached 1: Frequency stops at current frequency
				5	JOG	4	0: JOG OFF Pulse 1: JOG RUN
				6	QStop	2	Quick Stop
				7	Power	1	0: Power OFF 1: Power ON
				8	Ext_md2	4	0→1: Absolute position cleared
	01h	RW	U16	14–9			
				15	RST	4	Pulse 1: Fault code cleared
	02h	RW	U16		Mode Cmd		0: Speed mode
	03h	RW	U16				Speed command (unsigned decimal)
	04h	RW	U16				
	05h	RW	S32				
	06h	RW					

Index	sub	R/W	Size	Descriptions			Speed Mode
				bit	Definition	Priority	
2060h	07h	RW	U16				
	08h	RW	U16				
2061h	01h	R	U16	0	Arrive		Frequency command reached
				1	Dir		0: Motor FWD run 1: Motor REV run
				2	Warn		Warning occurs
				3	Error		Error detected
				4			
				5	JOG		JOG
				6	QStop		Quick stop
				7	Power On		Switch ON
				15–8			
	02h	R					
	03h	R	U16				Actual output frequency
	04h	R					
	05h	R	S32				Actual position (absolute)
	06h	R					
	07h	R	S16				Actual torque

Delta Standard (New Definition 0x60xx)

Object	Instance	Attributes	R/W	Size	Descriptions			Speed Mode	Torque Mode
					bit	Definition	Priority		
0x300	0x60	0x00	RW	U16	0	Ack	4	0: fcmd = 0 1: fcmd = Fset (Fpid)	
					1	Dir	4	0: FWD run command 1: REV run command	
					2				
					3	Halt	3	0: Drive runs until target speed is reached 1: Drive stops by declaration setting	The internal decoding is seen as the target torque and is 0, but the display shows the target torque has been set externally.
					4	Hold	4	0: Drive runs until target speed is reached 1: Frequency stop at current frequency	
					5	JOG	4	0: JOG OFF 1: JOG RUN	
					6	QStop	2	Quick Stop	Quick Stop
					7	Power	1	0: Power OFF 1: Power ON	0: Power OFF 1: Power ON
					8	Ext_Cmd2	4	0->1: Clear absolute position	0->1: Clear absolute position
					14~8				
					15	RST	4	Pulse 1: Clear fault codes	Pulse 1: Arial
		0x01	RW	U16		Mode Cmd		0: Speed mode	2: Torque mode
		0x02	RW	U16		Speed Cmd		Speed command (unsigned)	
		0x03	RW	U16		Torq Limit			Torque limit (unsigned)
		0x06	RW	S16		Torq Cmd			Torque command (signed))
		0x07	RW	U16					Speed limit (unsigned)

Object	Instance	Attributes	R/W	Size	Descriptions			Speed Mode	Torque Mode
					bit	Definition	Priority		
	0x61	0x00	R	U16	0	Arrive		Frequency command reached	Torque command reached
					1	Dir		0: Motor FWD run 1: Motor REV run	0: Motor FWD run 1: Motor REV run
					2	Warn		Waring occurs	Waring occurs
					3	Error		Fault occurs	Fault occurs
					4				
					5	JOG		JOG	JOG
					6	QStop		Quick stop	Quick stop
					7	Power On		Switched ON	Switched ON
					15~8				
		0x02	R	U16				Actual output frequency	Arial
		0x04	R	S32				Actual position (absolute)	Actual position (absolute)
		0x06	R	S16				Actual torque	Actual torque

DS402 Standard

Index	Sub	Definition	Default	R/W	Size	Unit	PDO Map	Mode	Note
6007h	0	Abort connection option code	2	RW	S16		Yes		0: No action 2: Disable voltage 3: Quick Stop
603Fh	0	Error code	0	R0	U16		Yes		
6040h	0	Control word	0	RW	U16		Yes		
6041h	0	Status word	0	R0	U16		Yes		
6042h	0	velocity mode target velocity	0	RW	S16	rpm	Yes	vl	
6043h	0	velocity mode velocity demand	0	RO	S16	rpm	Yes	vl	
6044h	0	velocity mode control effort	0	RO	S16	rpm	Yes	vl	
604Fh	0	velocity mode ramp function time	10000	RW	U32	1ms	Yes	vl	The minimum unit is 100 ms. For example, when it is set to 290 ms, it is regarded as 200 ms. When it is set to 10301 ms, it is regarded as 10300 ms. In addition, it cannot be set to zero.
6050h	0	velocity mode slow down time	10000	RW	U32	1ms	Yes	vl	
6051h	0	velocity mode quick stop time	1000	RW	U32	1ms	Yes	vl	
605Ah	0	Quick stop option code	2	RW	S16		No		0: Disable drive function 1: Slow down on slow down ramp 2: Slow down on quick stop ramp 5: Slow down on slow down ramp and stay in QUICK STOP 6: Slow down on quick stop ramp and stay in QUICK STOP
605Ch	0	Disable operation option code	1	RW	S16		No		0: Disable drive function 1: Slow down with slow down ramp; disable the drive function
6060h	0	Mode of operation	2	RW	S8		Yes		2: Velocity mode
6061h	0	Mode of operation display	2	RO	S8		Yes		Same as above

15-5 CANopen Fault Codes

- Refer to settings for Pr.06-17–Pr.06–22 and Pr.14-70–Pr.14-73
- Refer to Chapter 14 Fault Codes for detailed descriptions.

Setting	Display	Fault Code	Description	CANopen Fault Register (bit 0–7)	CANopen Fault Code
1	ocA	0001H	Over-current during acceleration (ocA)	1	2213H
2	ocd	0002H	Over-current during deceleration (ocd)	1	2213H
3	ocn	0003H	Over-current during steady operation (ocn)	1	2314H
4	GFF	0004H	Ground fault (GFF)	1	2240H
6	ocS	0006H	Over-current at stop (ocS)	1	2314H
7	ovA	0007H	Over-voltage during acceleration (ovA)	2	3210H
8	ovd	0008H	Over-voltage during deceleration (ovd)	2	3210H
9	ovn	0009H	Over-voltage during constant speed (ovn)	2	3210H
10	ovS	000AH	Over-voltage at stop (ovS)	2	3210H
11	LvA	000BH	Low-voltage during acceleration (LvA)	2	3220H
12	Lvd	000CH	Low-voltage during deceleration (Lvd)	2	3220H
13	Lvn	000DH	Low-voltage at constant speed (Lvn)	2	3220H
14	LvS	000EH	Low-voltage at stop (LvS)	2	3220H
15	orP	000FH	Phase loss protection (orP)	2	3130H
16	oH1	0010H	IGBT overheating (oH1)	3	4310H
18	tH1o	0012H	IGBT temperature detection failure (tH1o)	3	FF00H
21	oL	0015H	Over load (oL)	1	2310H
22	EoL1	0016H	Electronic thermal relay 1 protection (EoL1)	1	2310H
23	EoL2	0017H	Electronic thermal relay 2 protection (EoL2)	1	2310H
24	oH3	0018H	Motor overheating (oH3)	3	FF20H
26	ot1	001AH	Over torque 1 (ot1)	3	8311H
27	ot2	001BH	Over torque 2 (ot2)	3	8311H
28	uC	001CH	Under current (uC)	1	8321H
31	cF2	001FH	EEPROM read error (cF2)	5	5530H
33	cd1	0021H	U-phase error (cd1)	1	FF04H
34	cd2	0022H	V-phase error (cd2)	1	FF05H
35	cd3	0023H	W-phase error (cd3)	1	FF06H
36	Hd0	0024H	cc hardware error (Hd0)	5	FF07H

Setting	Display	Fault Code	Description	CANopen Fault Register (bit 0–7)	CANopen Fault Code
37	Hd1	0025H	oc hardware error (Hd1)	5	FF08H
40	AUE	0028H	Auto-tuning error (AUE)	1	FF21H
41	AFE	0029H	PID loss ACI (AFE)	7	FF22H
43	PGF2	002BH	PG feedback loss (PGF2)	7	7301H
44	PGF3	002CH	PG feedback stall (PGF3)	7	7301H
45	PGF4	002DH	PG slip error (PGF4)	7	7301H
48	ACE	0030H	ACI loss (ACE)	1	FF25H
49	EF	0031H	External Fault (EF)	5	9000H
50	EF1	0032H	Emergency stop (EF1)	5	9000H
51	bb	0033H	External base block (bb)	5	9000H
52	Pcod	0034H	Password is locked (Pcod)	5	FF26H
54	CE1	0036H	Illegal command (CE1)	4	7500H
55	CE2	0037H	Illegal data address (CE2)	4	7500H
56	CE3	0038H	Illegal data value (CE3)	4	7500H
57	CE4	0039H	Data is written to read-only address (CE4)	4	7500H
58	CE10	003AH	Modbus transmission time-out (CE10)	4	7500H
61	ydc	003DH	Y-connection / Δ-connection switch error (ydc)	2	3330H
62	dEb	003EH	Deceleration energy backup error (dEb)	2	FF27H
63	oSL	003FH	Over slip error (oSL)	7	FF28H
72	STL1	0048H	S1 internal circuit detection error (STL1)	5	FF30H
76	STo	004CH	STO (STo)	5	FF31H
77	STL2	004DH	S2 internal circuit detection error (STL2)	5	FF32H
78	STL3	004EH	Internal circuit detection error (STL3)	5	FF33H
79	Aoc	004FH	U-phase over-current before run (Aoc)	1	FF2BH
80	boc	0050H	V-phase over-current before run (boc)	1	FF2CH
81	coc	0051H	W-phase over-current before run (coc)	1	FF2DH
82	oPL1	0052H	Output phase loss U phase (oPL1)	2	2331H
83	oPL2	0053H	Output phase loss V phase (oPL2)	2	2332H
84	oPL3	0054H	Output phase loss W phase (oPL3)	2	2333H
87	oL3	0057H	Low frequency overload protection (oL3)	0	8A00H

Setting	Display	Fault Code	Description	CANopen Fault Register (bit 0–7)	CANopen Fault Code
89	roPd	0059H	Rotor position detection error (roPd)	0	8A00H
101	CGdE	0065H	CANopen guarding error (CGdE)	4	8130H
102	CHbE	0066H	CANopen heartbeat error (CHbE)	4	8130H
104	CbFE	0068H	CANopen bus off error (CbFE)	4	8140H
105	CidE	0069H	CANopen index error (CidE)	4	8100H
106	CAdE	006AH	CANopen station address error (CAdE)	4	8100H
107	CFrE	006BH	CANopen index setting exceed limit (CFrE)	4	8100H
121	CP20	0079H	Internal communication error (CP20)	7	FF36H
123	CP22	007BH	Internal communication error (CP22)	7	FF38H
124	CP30	007CH	Internal communication error (CP30)	7	FF39H
126	CP32	007EH	Internal communication error (CP32)	7	FF3BH
127	CP33	007FH	Internal communication error (CP33)	7	FF3CH
128	ot3	0080H	Over-torque 3 (ot3)	1	2310H
129	ot4	0081H	Over-torque 4 (ot4)	1	2310H
134	EoL3	0086H	Internal communication error (EoL3)	1	2310H
135	EoL4	0087H	Internal communication error (EoL4)	1	2310H
140	Hd6	008CH	oc hardware error (Hd6)	1	2240H
141	b4GFF	008DH	GFF occurs before run (b4GFF)	1	2240H
142	AuE1	008EH	Auto-tune error 1 (AuE1)	1	FF3DH
143	AuE2	008FH	Auto-tune error 2 (AuE2)	1	FF3EH
144	AuE3	0090H	Auto-tune error 3 (AuE3)	1	FF3FH
149	AuE5	0095H	Auto-tune error 5 (AuE5)	1	FF44H

15-6 CANopen LED Function

There are two CANopen flash signs: RUN and ERR.

RUN LED:

LED Status	Condition	CANopen Status
OFF	Keep lighting off	Initial
Blinking	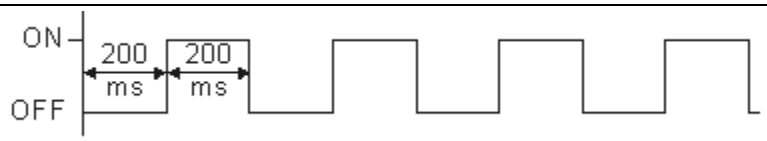	Pre-operation
Single Flash	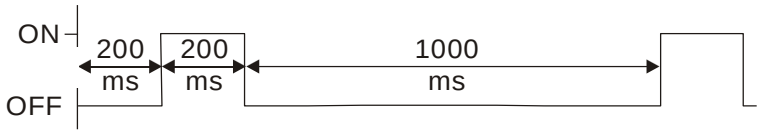	Stopped
ON	Keep lighting on 	Operation

ERR LED:

LED Status	Condition / Status
OFF	No Error
Single Flash	At least one CANopen packet failure 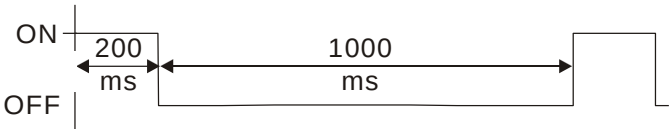
Double Flash	Guarding failure or heartbeat failure 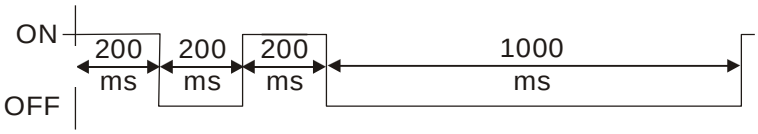
Triple Flash	SYNC failure 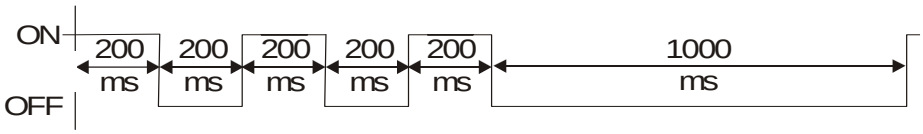
ON	Bus off

[This page intentionally left blank]

Chapter 16 PLC Function Applications

16-1 PLC Summary

16-2 Notes before Using a PLC

16-3 Turn on

16-4 Basic Principles of PLC Ladder Diagrams

16-5 Various PLC Device Functions

16-6 Introduction to the Command Window

16-7 Error Display and Handling

16-8 Explanation of PLC Speed Mode Control

16-9 Count Function Using Pulse Input

16-1 PLC Summary

16-1-1 Introduction

The commands provided by the MS300's built-in PLC functions, including the ladder diagram editing tool WPLSoft, as well as the use of basic commands and application commands, follow the operating methods of Delta's PLC DVP series.

16-1-2 WPLSoft ladder diagram editing tool

WPLSoft is Delta's software program for the DVP and MS300 programmable controllers in Windows operating system environment. In addition to general PLC program design and general Windows editing functions (such as cut, paste, copy, and multiple windows), WPLSoft also provides many features such as Chinese/English annotation editing, registry editing, settings, file reading, saving, and contact graphic monitoring and settings.

Table 16-1 lists the basic requirements for installing the WPLSoft editing software:

Item	System requirements
Operating System	Windows 95 / 98 / 2000 / NT / ME / XP / 7 /10
CPU	At least Pentium 90
Memory	At least 16 MB (we recommend at least 32 MB)
Hard Drive	Hard drive capacity: at least 100 MB of free space One optical drive (to install this software)
Display	Resolution: 640×480, at least 16 colors; it is recommended that the screen area be set at 800×600 pixels.
Mouse	Ordinary mouse or Windows-compatible pointing device
Printer	Printer with Windows driver software
RS-485 Port	Must have at least an RS-485 port to link to the PLC

Table 16-1

16-2 Notes before Using a PLC

1. The MS300 provides two communication serial ports that you can use to download programs to the PLC (see Figure 16-1 below).
   - Channel 1 (USB port) communication format is the same as channel 2.
   - Channel 2 has a preset communication format of 7, N, 2, 9600; you can change to ASCII in Pr.09-01 (transmission speed) and Pr.09-04 (communication protocol).
2. The PLC preset is node 2; you can change the PLC node in Pr.09-35 (PLC address), but this address may not be the same as the drive's address setting in Pr.09-00 (communication address).

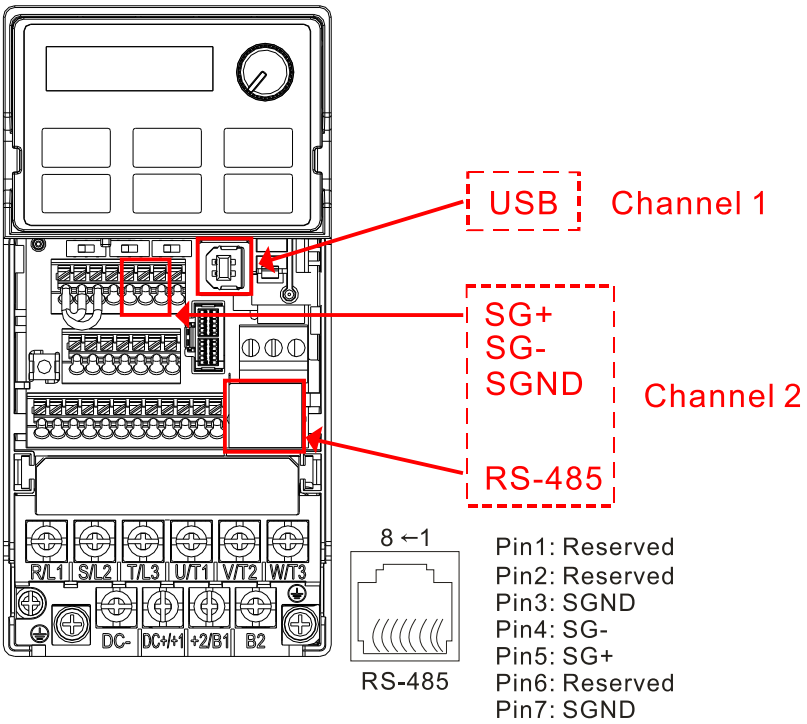

Figure 16-1

3. The host controller can simultaneously access data from the drive and the internal PLC, using the identifier for the node. For instance, if the drive node is 1 and the internal PLC node is 2, then the host controller command depends on the node address:
   - 01 (node) 03 (read) 0400 (address) 0001 (1 data item), indicating that it must read the data in drive Pr.04-00.
   - 02 (node) 03 (read) 0400 (address) 0001 (1 data item), indicating that it must read the data in internal PLC X0.
4. The PLC program is disabled when uploading / downloading programs.
5. Note that when using WPR commands to write parameters, you may modify values up to a maximum of 10^9 times; otherwise, after which a memory write error occurs. The number of modifications depends on whether the parameter value has changed. If you do not change the value, it does not change the number of modifications; however, if the entered value is different from before, the number of modifications increases by one.

6. When you set Pr.00-04 to 28, the displayed value is the value of PLC register D1043, as shown Figure 16-2 below).

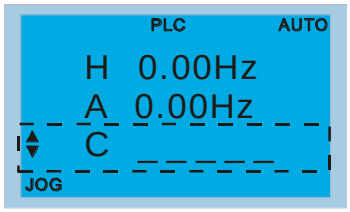

Digital Keypad KPC-CC01 (optional)
Can display 0–65535

Figure 16-2

7. In the PLC Run and PLC Stop mode, you cannot set Pr.00-02 to the values 9 or 10, and cannot be reset to the default value.
8. You can reset the PLC to the default value when you set Pr.00-02 to 6.
9. The corresponding MI function is disabled when the PLC writes to input contact X.
10. When the PLC controls the drive operation, the control commands are entirely controlled by the PLC and are not affected by the setting for Pr.00-21.
11. When the PLC controls the drive's Frequency commands (FREQ commands), the Frequency commands are entirely controlled by the PLC, and are not affected by the setting for Pr.00-20 or the HAND ON / OFF configuration.
12. When the PLC controls the drive operation, if the keypad STOP setting is valid, this triggers a FStP error and causes the drive to stop.

16-3 Turn on

16-3-1 Connect the drive to the PC

Start operating the PLC functions with the following steps:

After pressing the MENU key and choosing 10: PLC on the KPC-CC01 digital keypad (optional), press the ENTER key. And then choose 2: PLC Run and press the ENTER key (see Figure 16-3 below).

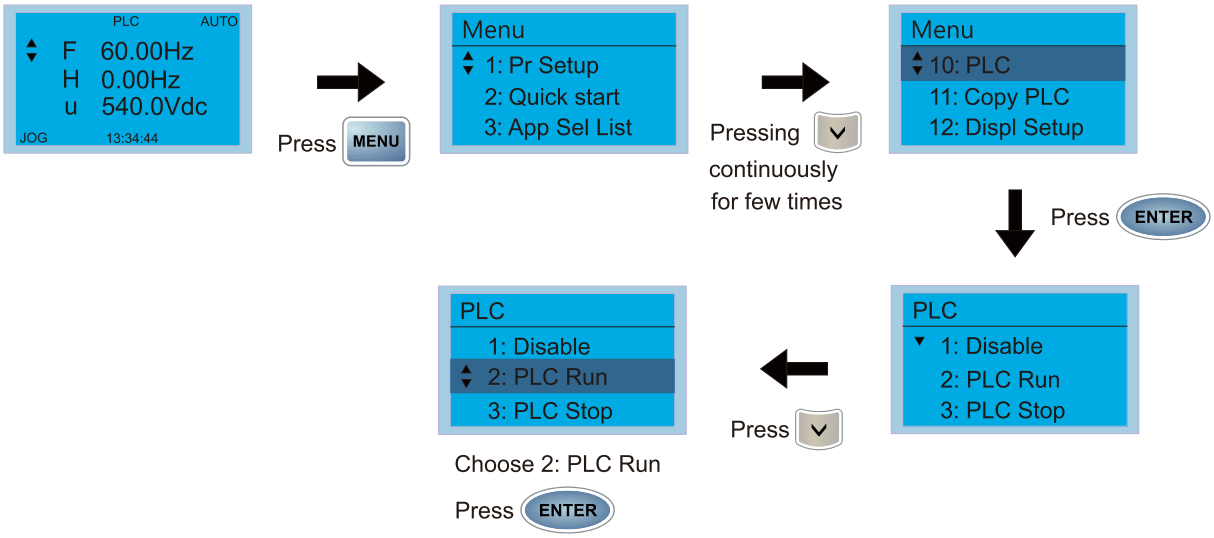

Figure 16-3

1. Wiring: Connect the drive's RJ45 communications interface to a PC through the RS-485 cable.

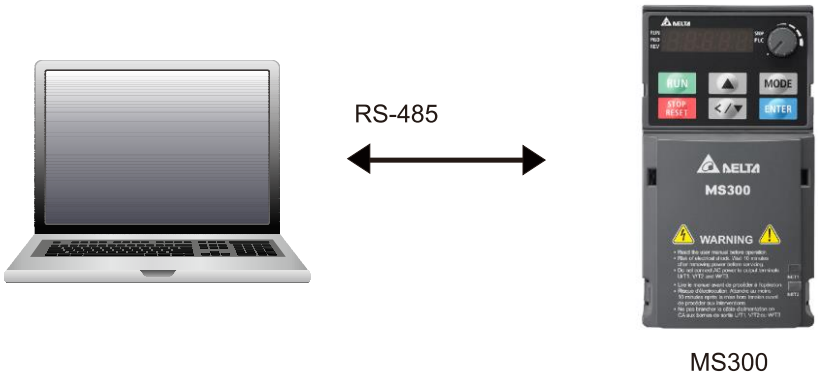

Figure 16-4

2. PLC function usage

Digital keypad KPC-CC01 (optional)

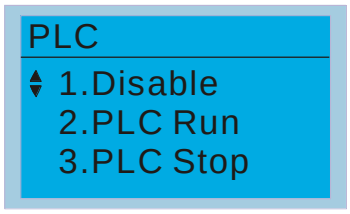

Figure 16-5

PLC functions are as shown in Figure 16-5 on the left; select item 2. PLC Run to enable the PLC functions.

1: No function (Disable)

2: Enable PLC (PLC Run)

3: Stop PLC functions (PLC Stop)

Digital keypad (KPMS-LE01)

Select PLC1 to enter PLC mode setting (see Figure 16-6).

PLC 0: Do not implement PLC functions

PLC 1: Initiate PLC Run

PLC 2: Initiate PLC Stop

Figure 16-6

The MS300 automatically switches to PLC mode when the external multi-function input terminals (MI1–MI7) are in PLC Mode selection bit 0 (51) or PLC Mode selection bit1 (52), and the terminal contact is closed or open. In this case, keypad switching is invalid. The corresponding actions are listed in Table 16-2.

PLC mode		PLC Mode selection bit1 (52)	PLC Mode selection bit0 (51)
Using KPC-CC01 (optional)	Using KPMS-LE01		
Disable	PLC 0	OFF	OFF
PLC Run	PLC 1	OFF	ON
PLC Stop	PLC 2	ON	OFF
Maintain previous state	Maintain previous state	ON	ON

Table 16-2

Using the MS300 digital keypad to implement the PLC functions

☑ When the PLC screen from the keypad is set to PLC0 (or “Disable” on KPC-CC01), the built-in PLC is disabled and you cannot use WPLSoft or ISPSoft to connect to it.

☑ When the PLC screen from the keypad is set to PLC1 (or “PLC Run“ on KPC-CC01), the built-in PLC is enabled and you can use WPLSoft or ISPSoft to connect to it through Modbus.

☑ When the PLC screen from the keypad is set to PLC2 (or “PLC Stop” on KPC-CC01), the built-in PLC is enabled and you can use WPLSoft or ISPSoft to connect to it. However, the programs in the built-in PLC do not work.

☑ When the built-in PLC is enabled (PLC1 or PLC2), you can switch between PLC Run or PLC Stop through WPLSoft or ISPSoft.

☑ The external terminal control method is the same as shown in Table 16-2 above.

NOTE:

- When the input / output terminals (MI1–MI7, Relay, and MO) are included in the PLC program, these input / output terminals are used only by the PLC. For example, when the PLC program controls Y0 during PLC operation (PLC1 or PLC2), the corresponding output terminal relay (RA / RB / RC) operates according to the program. At this time, the multifunctional input / output terminal setting has no effect. Because these terminal functions are already being used by the PLC, you can determine the DI / DO / AO in use by the PLC by looking at Pr.02-52, 02-53, and 03-30.
- When the PLC program uses special register D1040, the corresponding AO contact AFM is occupied.
- Pr.03-30 monitors the action state of the PLC function analog output terminals; bit 0 corresponds to the AFM action state.

16-3-2 I/O device explanation

Input devices:

PLC Input Relay	X0	X1	X2	X3	X4	X5	X6	X7	X10	X11	X12	X13	X14	X15	X16	X17
Drive Input Terminal	MI1	MI2	MI3	MI4	MI5	MI6	MI7									

Table 16-3

Output devices:

PLC Output Relay	Y0	Y1	Y2	Y3	Y4	Y5	Y6	Y7	Y10	Y11	Y12	Y13	Y14	Y15	Y16	Y17
Drive Output Terminal	RY			MO1	MO2											

Table 16-4

RY1 / RY2 / RY3

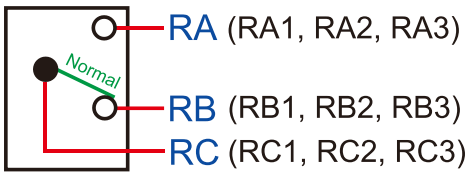

RY10 / RY11 / RY12

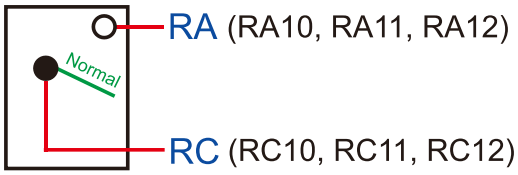

Figure 16-7

16-3-3 Installing WPLSoft

Download and install WPLSoft editing software on Delta's website:

After you install WPLSoft, the WPLSoft program is located in the folder "C: \Program Files\Delta Industrial Automation\WPLSoft x.xx".

16-3-4 Program writing

Step 1. You can run the editing software by double-clicking the WPLSoft icon (see Figure 16-8).

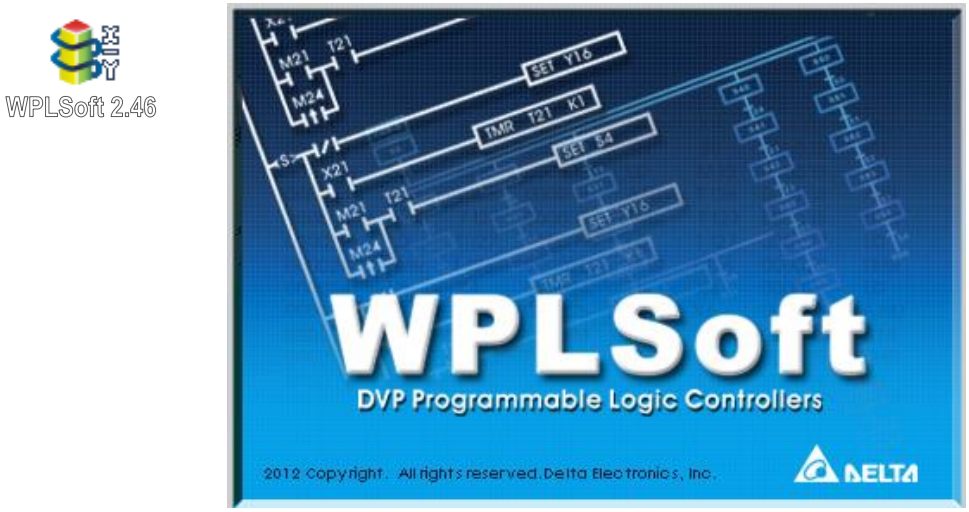

Figure 16-8 Left: WPLSoft icon; right: start screen

Step 2. Then the WPLSoft editing window appears (see Figure 16-9 below). When running the WPLSoft for the first time, before you create a new project file, the menu bar shows only **File**, **View**, **Communications**, **Options**, and **Help** menus.

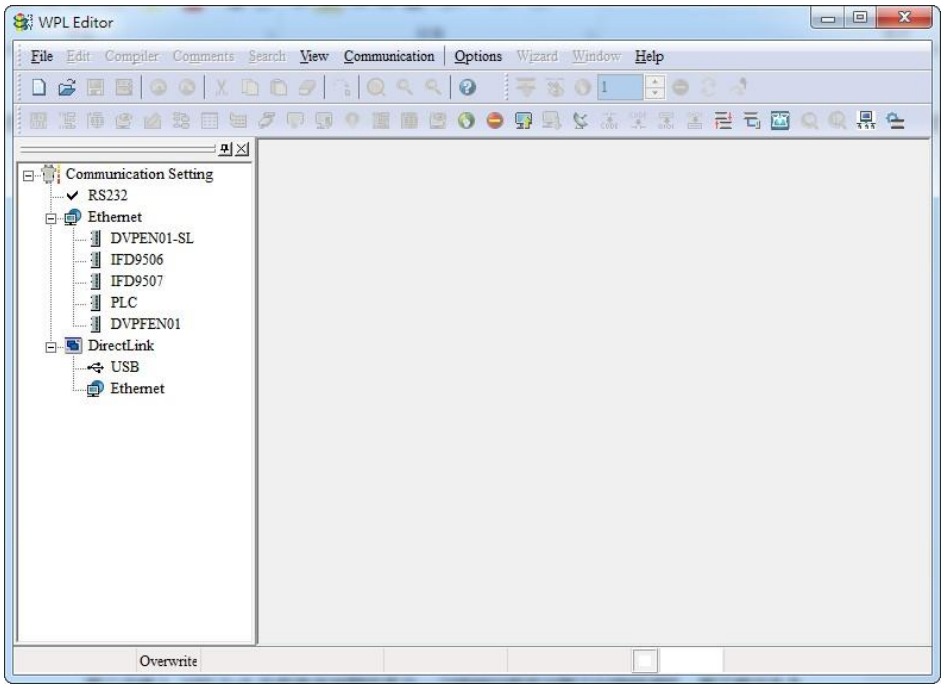

Figure 16-9

NOTE: The next time you run WPLSoft, the program opens the last project file you edited. Figure 16-10 describes the main parts of the WPLSoft editing window.

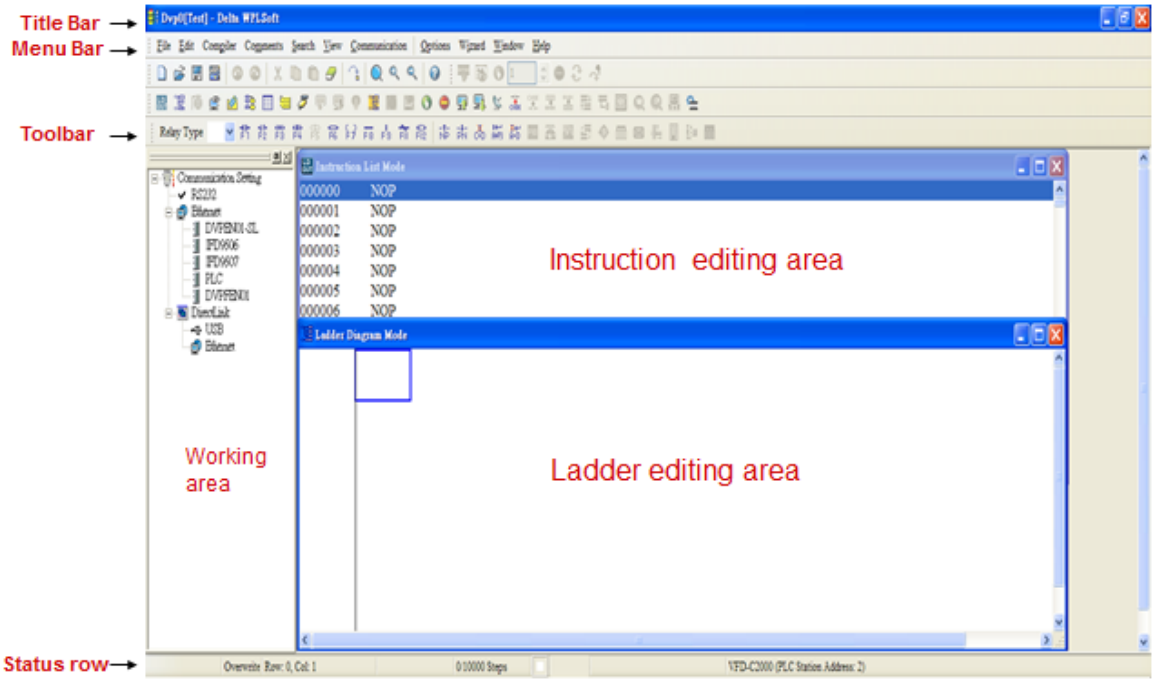

Figure 16-10

Step 3. To open a new project file, on the Toolbar, click the New button (or press Ctrl+N) (see Figure 16-11).

Figure 16-11

NOTE: Alternatively, on the **File** menu, click **New** (Ctrl+N) (see Figure 16-12).

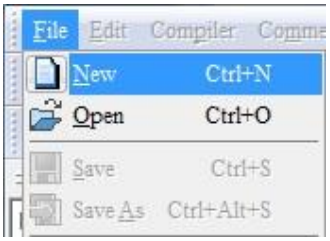

Figure 16-12

Step 4. This displays the **Select a PLC Model** dialog box where you can enter the **Program Title**, **File Name**, and select the device and communication settings (see Figure 16-13).

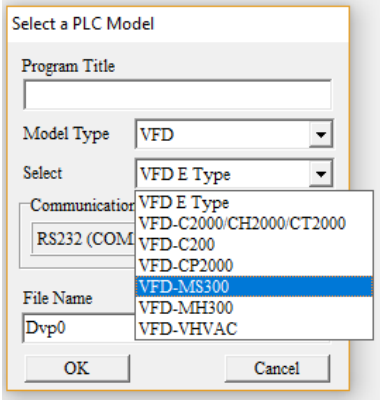

Figure 16-13

In the **Communication Setting** dialog box, define the communication settings and then click **OK**.

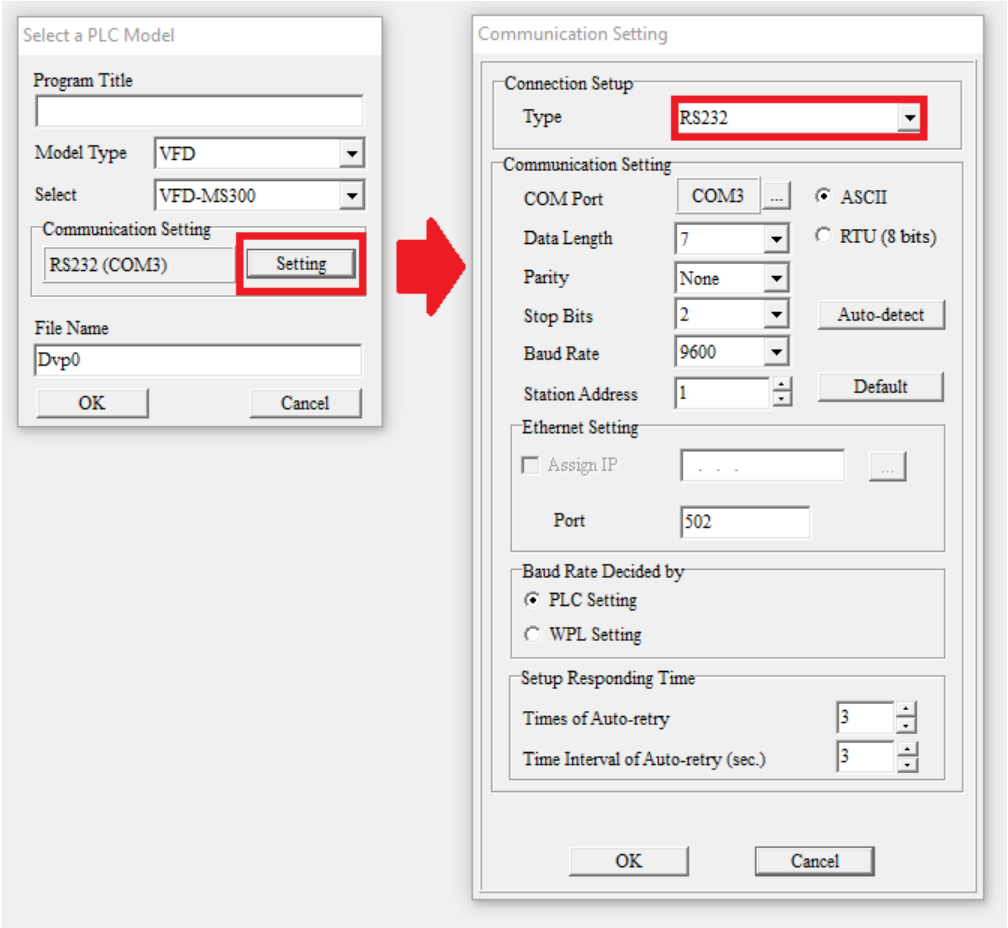

Figure 16-14

NOTE: When using USB port (MS300 / MH300 series) to connect to the drive, select RS232 for the Connection Setup.

Step 5. After clicking **OK**, you can then begin editing the program. There are two program editing methods: you can edit in the command mode, or edit in the ladder diagram mode (see Figure 16-15).

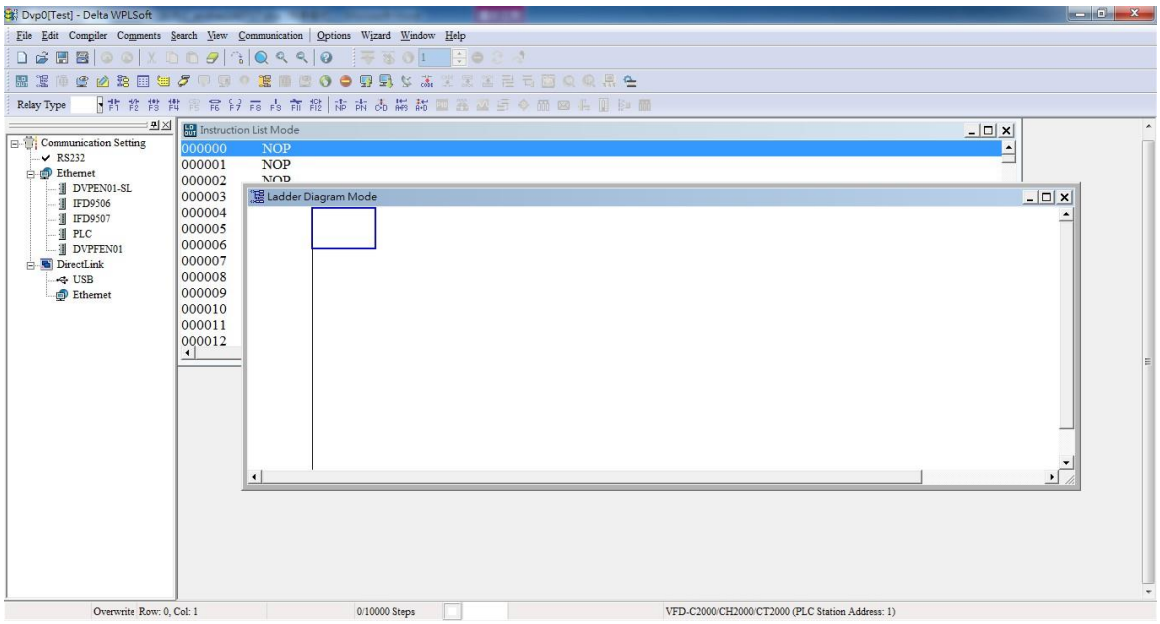

Figure 16-15

NOTE: In the ladder diagram mode, you can use the buttons on the function icon row on the toolbar (see Figure 16-16) to edit the programs.

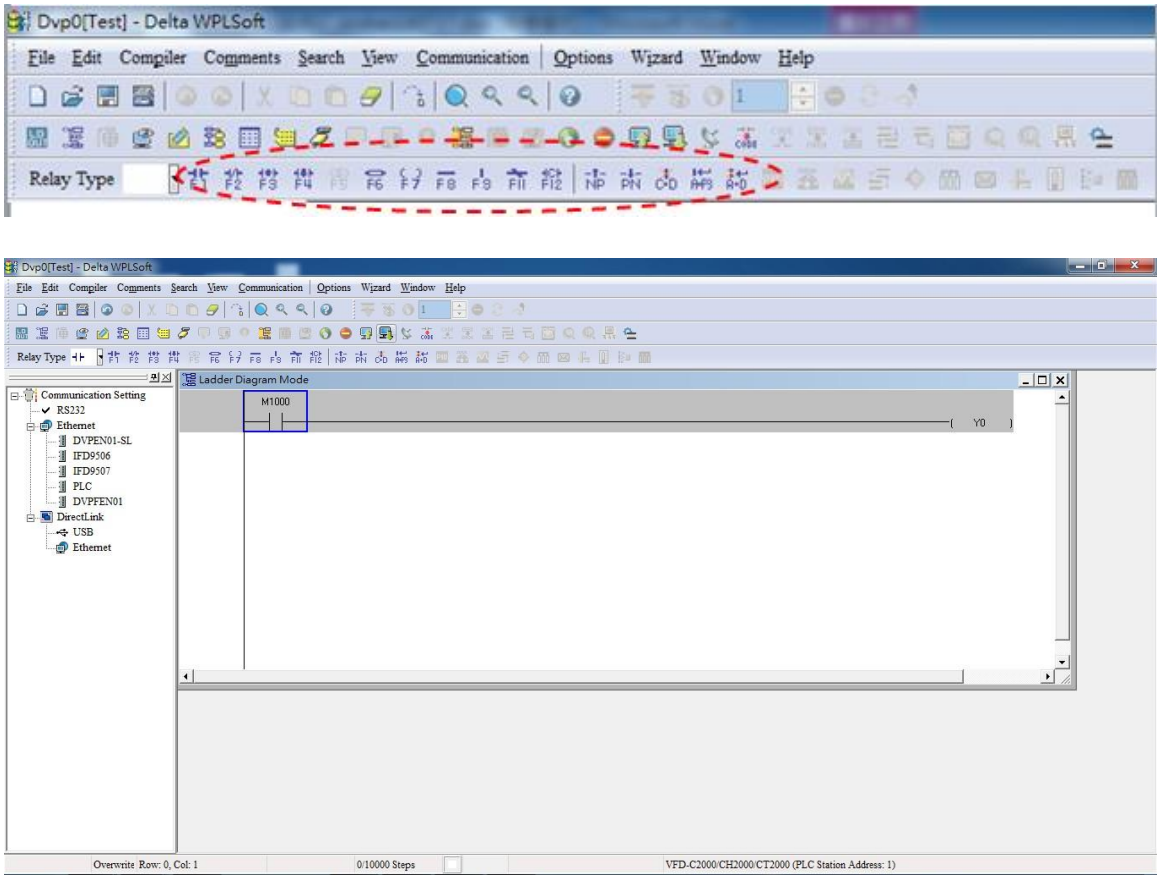

Figure 16-16

Basic Operation

Example: Create the ladder diagram as shown in Figure 16-17.

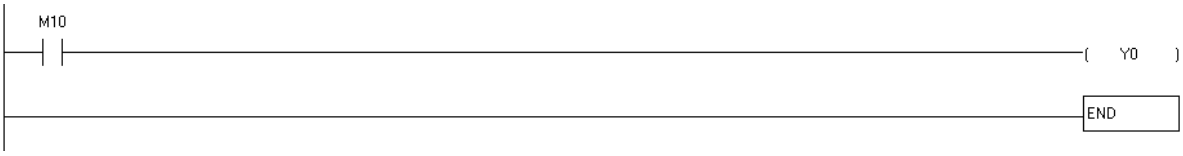

Figure 16-17

Use the following steps to create the ladder diagram. These steps show you how to use both the mouse and the keyboard (F1–F12) to add functions.

Step 1. Figure 16-18 shows the WPLSoft program after you create a new project file.

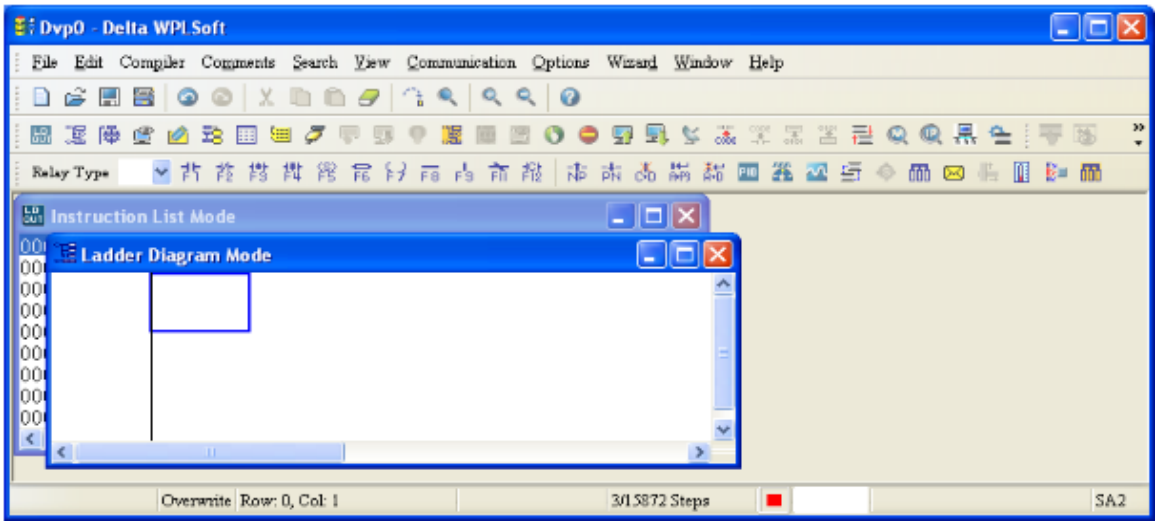

Figure 16-18

Step 2. Add an always-open switch. On the toolbar click the always-open switch button or press F1. In the **Input Device Instruction** dialog box, select the device name (such as **M**), device number (such as **10**) and enter comments (such as **auxiliary contact**). Click **OK** when finished. (See Figure 16-19 and Figure 16-20.)

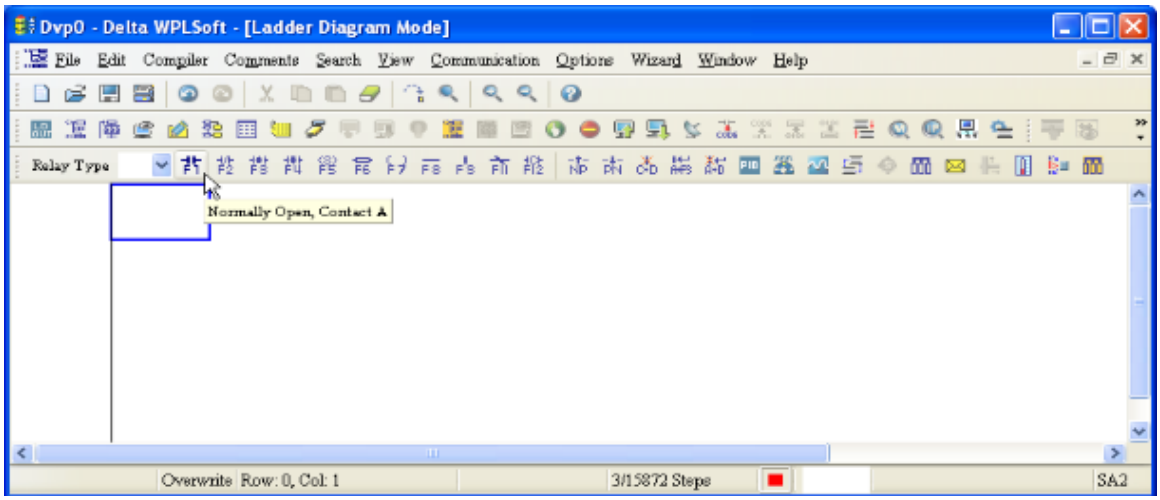

Figure 16-19

Figure 16-20

Step 3. Add an output coil. Click the output coil button or press F7.

In the **Input Device Instruction** dialog box, select the device name (such as **Y**), the device number (such as **0**) and enter comments (such as **output coil**).Click **OK** when finished. (See Figure 16-21 and Figure 16-22.)

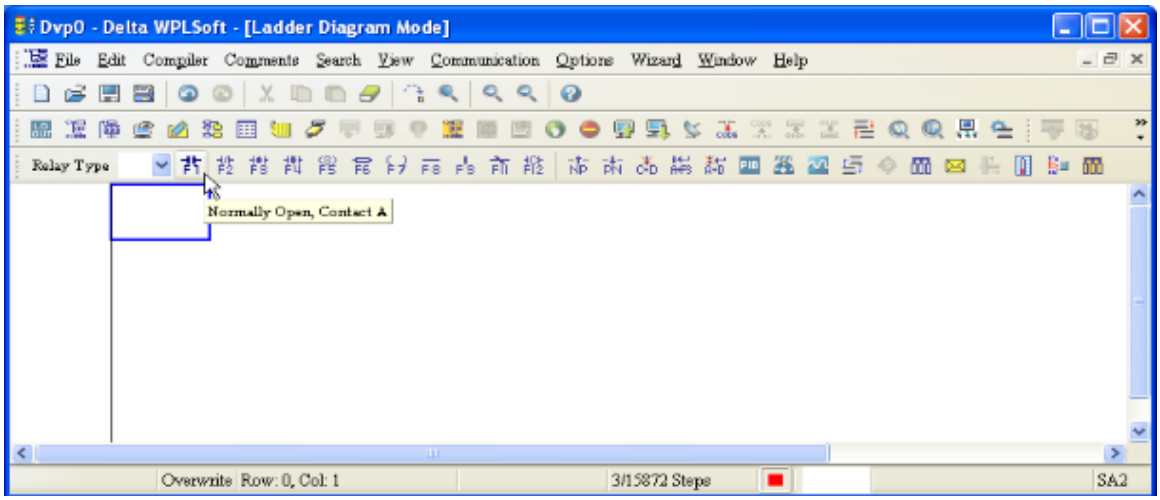

Figure 16-21

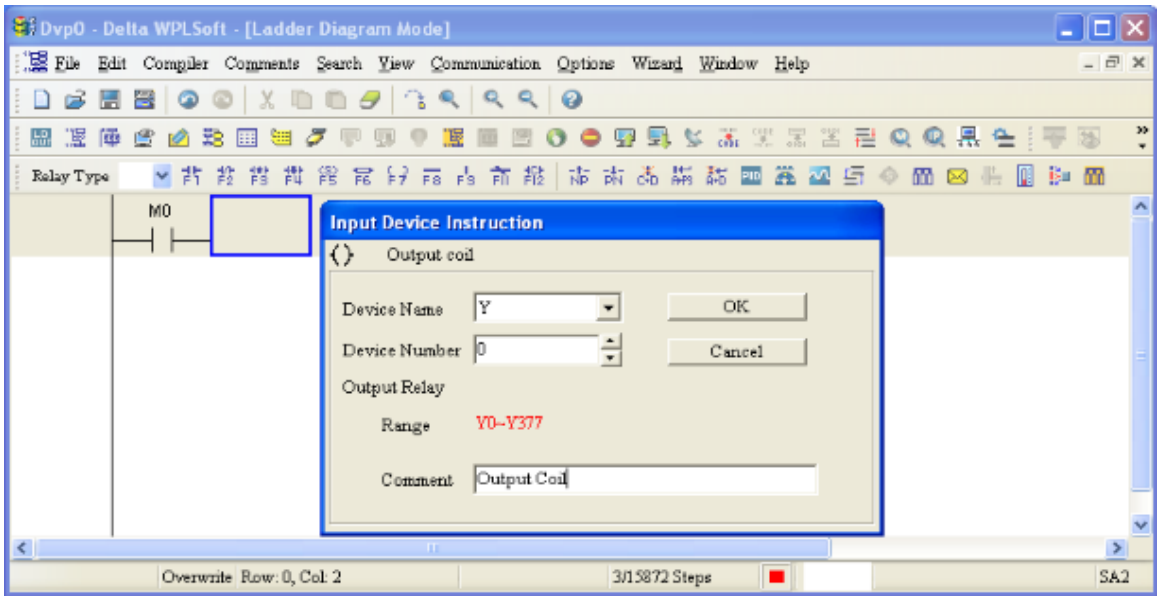

Figure 16-22

Step 4. On the toolbar, click the Application Command button F6 or press F6.

In the **Application Instructions** dialog box, in **Instruction Type** drop-down list, select **All Application Instructions**. In the **Application Instruction** drop-down list, select **END**, or use the keyboard to type “END”, and then click **OK**. (See Figure 16-23.)

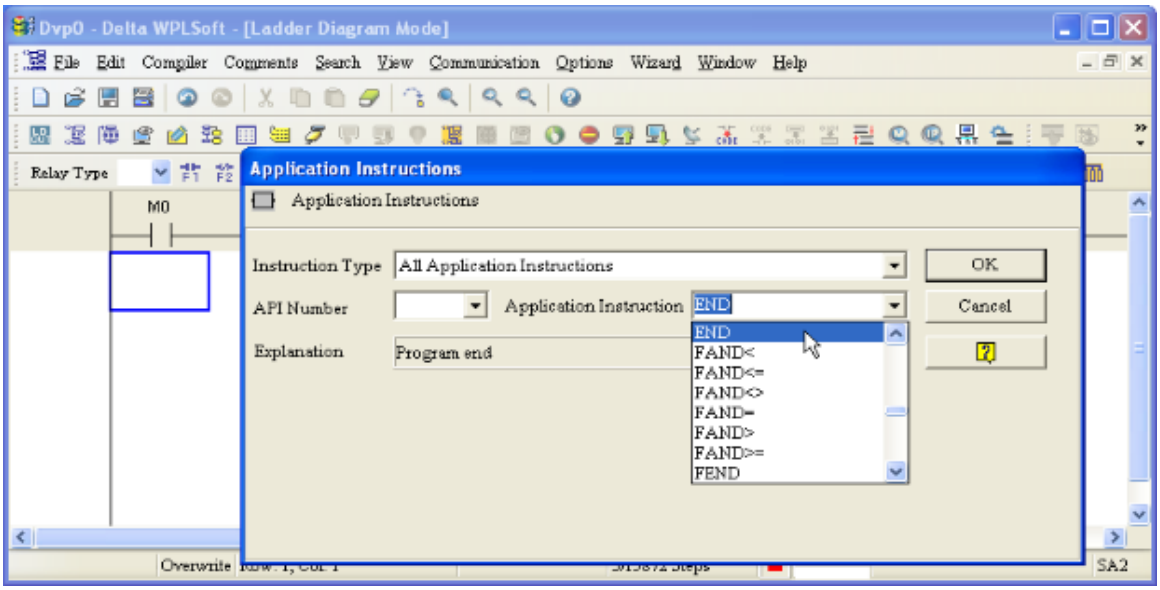

Figure 16-23

Step 5. Compile the program. On the toolbar, click the Compile button CODE to compile the edited ladder diagram into a command program. After compiling, the number of rungs appear on the left side of the busbar. (See Figure 16-24.)

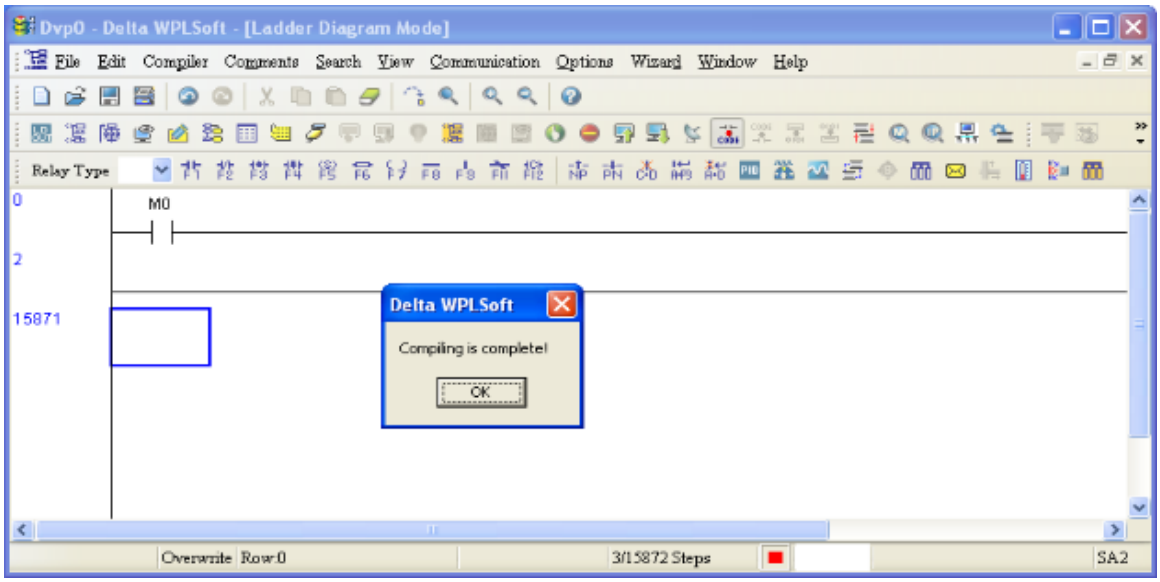

Figure 16-24

16-3-5 Program download

After you compile your program, click the CODE button . After finish coding, click the Download button . WPLSoft downloads the program to the online PLC in the communication format that you specified for the communication settings.

16-3-6 Program monitoring

After you download the program, confirm that the PLC is in Run mode. On the Communication menu, click Online Mode , and then click **Start Ladder Diagram Control** (see Figure 16-25). This allows you to supervise and operate the ladder diagram while online.

Figure 16-25

16-4 Basic Principles of PLC Ladder Diagrams

16-4-1 Schematic diagram for PLC ladder diagram program scanning

Output results are calculated on the basis of the ladder diagram configuration (internal devices have real-time output before results are sent to an external output point)

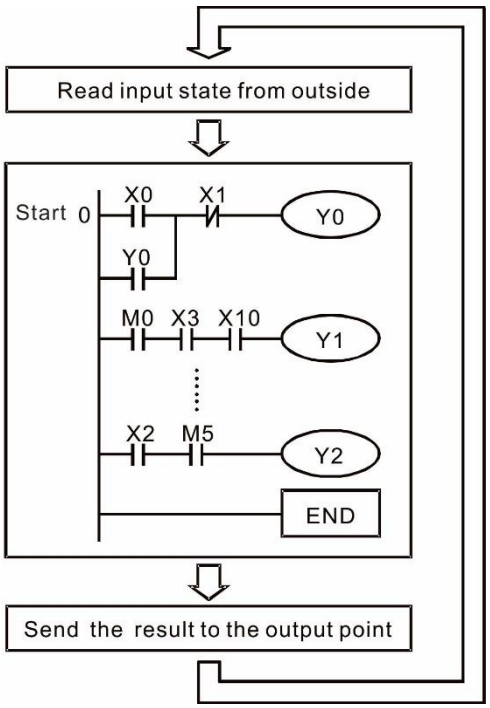

Repeated program scans

Figure 16-26

16-4-2 Introduction to ladder diagrams

Ladder diagrams use a graphic language widely applied in automatic controls. They employ common electrical control circuit symbols. After you use a ladder diagram editor to create a ladder diagram program, the PLC program design is complete. Using a graphic format to control processes is very intuitive and is readily accepted by personnel who are familiar with electrical control circuit technology. Many of the basic symbols and actions in a ladder diagram mimic common electrical devices in conventional automatic control power distribution panels, such as buttons, switches, relays, timers, and counters.

Internal PLC devices: The types and quantities of internal PLC devices vary in different brands of products. Although these internal devices use the same names as the conventional electrical control circuit elements (such as relays, coils, and contacts), a PLC does not actually contain these physical devices, and they instead correspond to basic elements in the PLC's internal memory (bits). For instance, if a bit is 1, this may indicate that a coil is electrified; and if that bit is 0, it indicates that the coil is not electrified. You can use a N.O. contact (Normally Open, or contact A) to directly read the value of the corresponding bit, and use a N.C. contact (Normally Closed, or contact B) to get the inverse of the bit’s value. Multiple relays occupy multiple bits, and eight bits comprise one byte. Two bytes comprise one word, and two words comprise a double word. When multiple relays are processing at the same time (as in addition/subtraction or displacement), it can use a byte, a word, or a double word. Furthermore, a PLC contains two types of internal devices: a timer and a counter. It not only has a coil, but can count time and numerical values. Because of this, when it is necessary to process numerical values, these values are usually in the form of bytes, words, or double words (internally in the PLC).

The various internal devices in a PLC use a certain amount of memory in the PLC's storage area. When you use these devices, the content of the corresponding storage area is read in the form of bits, bytes, or words.

Table 16-5 describes the internal devices in a PLC

Device Type	Description of Function
Input Relay	An input relay constitutes the basic unit of storage in a PLC's internal memory, and corresponds to an external input point. It serves as a terminal connecting with an external input switch and receiving external input signals. It is driven by external input signals, to which it assigns values of 0 or 1. A program design method cannot change the input relay status, and therefore cannot rewrite the corresponding basic units of an input relay. You cannot use WPLSoft to manually perform ON/OFF actions. You can use a relay's contacts (contacts A and B) an unlimited number of times in a program. An input relay with no input signal must be left idle and cannot be used for some other purpose. ☑ Input devices are indicated by X0, X1, X7, X10, X11, and so on. These devices are indicated with the symbol X, and a device's order is indicated with an octal number. Input point numbers are indicated in the main PLC and in expansion devices.
Output Relay	An output relay constitutes the basic unit of storage in a PLC's internal memory, and corresponds to an external output point. It connects with an external load. It can be driven by an input relay contact, a contact on another internal device, or its own contacts. It uses one N.O. contact to connect with external loads or other contacts, and like the input contacts, you can use the output relay's contacts an unlimited number of times in a program. An output relay with no input signal is idle, but can be used by an internal relay if needed. ☑ Output devices are indicated by Y0, Y1, Y7, Y10, Y11, and so on. These devices are indicated with the symbol Y, and a device's order is indicated with an octal number. Output point numbers are indicated in the main PLC and in expansion devices.
Internal Relay	Internal relays have no direct connection with the outside. These relays are auxiliary relays inside a PLC. Their function is the same as that of an auxiliary (central) relay in an electrical control circuit: Each auxiliary relay corresponds to a basic unit of internal storage; they can be driven by input relay contacts, output relay contacts, and the contacts of other internal devices. You can use an internal auxiliary relay's contacts an unlimited number of times in a program. Internal relays have no outputs to the outside, and their status must output through an output point. ☑ Internal relay devices are indicated by: M0, M1–M799, and so on. These devices are indicated with the symbol M, and the device's order is indicated with a decimal number.
Counter	Counters perform counting operations. The setting value for a counter (such as the number of pulses to be counted) must be assigned when a counter is used. A counter contains a coil, contact, and a counting storage device. When the coil goes from OFF → ON, this indicates that the counter receives an input pulse, and adds one to its count. There are 16 bits available in the counter. ☑ Counter device are indicated by: C0, C1–C79, and so on. These devices are indicated by the symbol C, and the device's order is indicated with a decimal number.

Device Type	Description of Function
Timer	Timers perform timing for operations. The timer contains a coil, contact, and a time value register. When the coil is electrified, and the setting value for the timer is reached, the contact is actuated (contact A closes, contact B opens), and the timer's fixed value is given by the setting value. A timer has a regulated clock cycle (timing units: 100 ms). As soon as power to the coil is cut off, the contact is no longer be actuated (contact A opens, contact B closes), and the original timing value returns to zero. ☑ Timer devices are indicated by: T0, T1–T159, and so on. These devices are indicated by the symbol T, and the device's order is indicated with a decimal number.
Data register	Data registers are used exclusively to store data and various parameters. When you use a PLC is to perform various types of sequence control, set time values, and count value controls, the PLC performs data processing and numerical operations and stores the operands, parameters, and results in data registers. Each data register contains 16 bits of binary data (one word). Two data registers with adjacent numbers can process double words. ☑ Data register devices are indicated by: D0, D1– D399, and so on. These devices are indicated by the symbol D, and the device's order is indicated with a decimal number.

Table 16-5

Ladder diagram images and explanations

Ladder Diagram Structures	Explanation of Commands	Command	Using Device
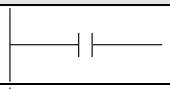	N.O. switch, contact A	LD	X, Y, M, T, C
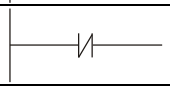	N.C. switch, contact B	LDI	X, Y, M, T, C
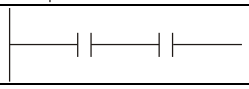	Series N.O.	AND	X, Y, M, T, C
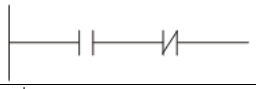	Series N.C.	ANI	X, Y, M, T, C
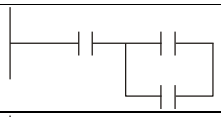	Parallel N.O.	OR	X, Y, M, T, C
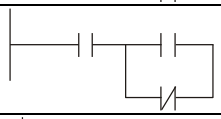	Parallel N.C.	ORI	X, Y, M, T, C
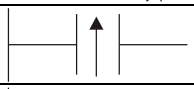	Rising edge-triggered switch	LDP	X, Y, M, T, C
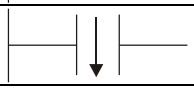	Falling edge-triggered switch	LDF	X, Y, M, T, C
	Rising edge-triggered series	ANDP	X, Y, M, T, C
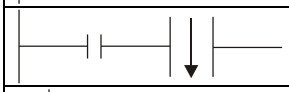	Falling edge-triggered series	ANDF	X, Y, M, T, C
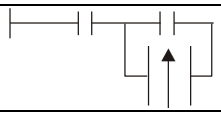	Rising edge-triggered parallel	ORP	X, Y, M, T, C

Ladder Diagram Structures	Explanation of Commands	Command	Using Device
	Falling edge-triggered parallel	ORF	X, Y, M, T, C
	Block series	ANB	N/A
	Block parallel	ORB	N/A
	Multiple outputs	MPS MRD MPP	N/A
	Coil driven output commands	OUT	Y, M
	Some basic commands, application commands.	Some basic commands, application commands.	
	Inverted logic	INV	N/A

Table 16-6

16-4-3 Overview of PLC ladder diagram editing

The program editing method in WPLSoft begins from the left busbar and proceeds to the right busbar (the right busbar is not visible in WPLSoft). Continue to the next row after completing each row; there are a maximum of 11 contacts on each row. If this is not sufficient, WPLSoft generates a continuous line to indicate the continued connection, so that you can add more devices. A continuous series of numbers is generated automatically and you can use identical input points repeatedly (as shown in the following diagram).

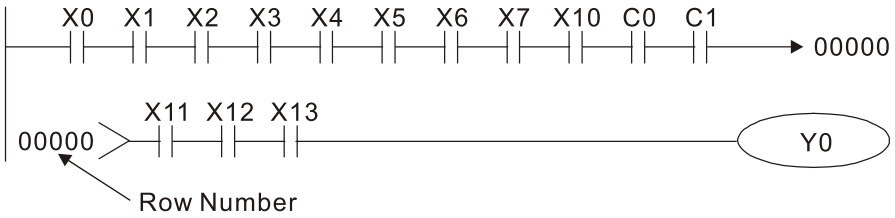

Figure 16-27

The PLC scans a ladder diagram programs from the upper left corner to the lower right corner. The coils and application command computing box are handled in the output, and in the ladder diagram are placed on the farthest right of a rung. Taking the diagram below as an example, we can analyze the procedural sequence of the ladder diagram. The number in the upper right corner gives the sequential order.

Explanation of command sequence

1	LD	X0
2	OR	M0
3	AND	X1
4	LD	X3
	AND	M1
	ORB	
5	LD	Y1
	AND	X4
6	LD	T0
	AND	M3
	ORB	
7	ANB	
8	OUT	Y1
	TMR T0	K10

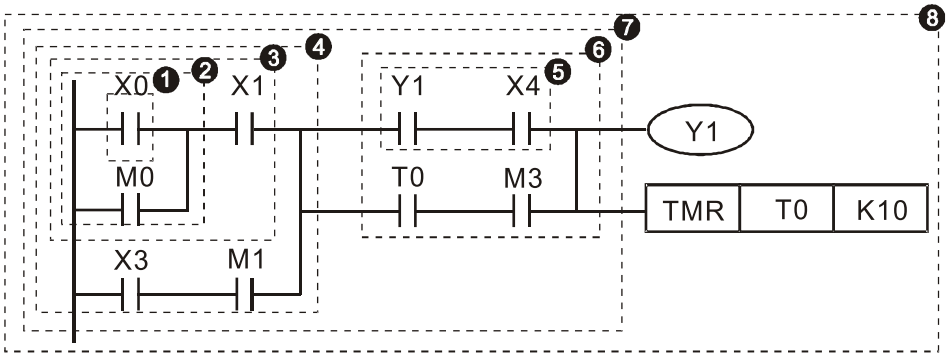

Figure 16-28

Explanation of basic structure of ladder diagrams

1. **LD (LDI) command:** An LD or LDI command appears at the start of a block.

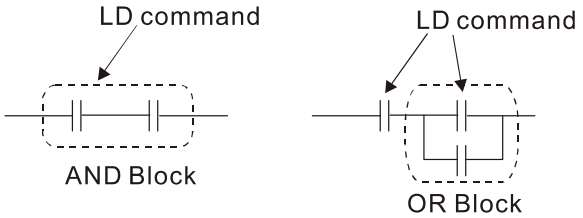

Figure 16-29

LDP and LDF use this command structure, but there are differences in their action state. LDP, LDF only act at the rising or falling edge of a conducting contact (see diagram below).

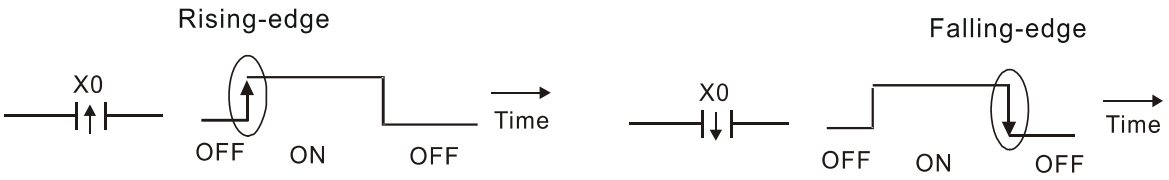

Figure 16-30

2. **AND (ANI) command:** a series configuration in which a single device is connected with one device or a block.

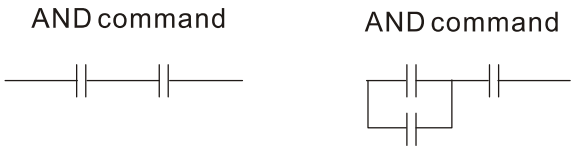

Figure 16-31

ANDP, ANDF use this structure, but their action occurs at the rising and falling edge of a conducting contact.

3. **OR (ORI) command:** a single device is connected with one device or a block.

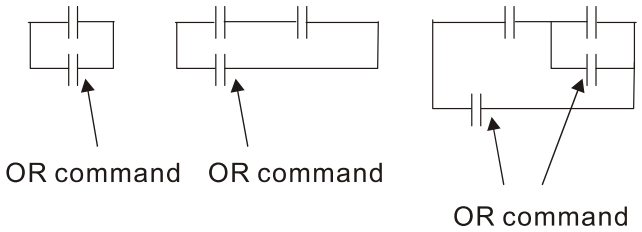

Figure 16-32

ORP, ORF use this structure, but their action occurs at the rising and falling edge a conduction contact.

4. **ANB command:** a configuration in which one block is in series with one device or block.

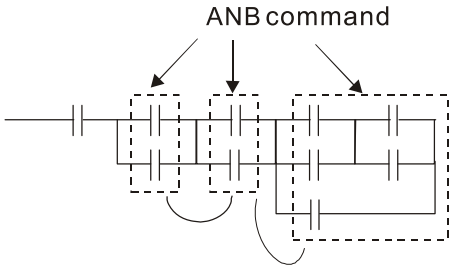

Figure 16-33

5. **ORB command:** a configuration in which one block is in parallel with one device or block.

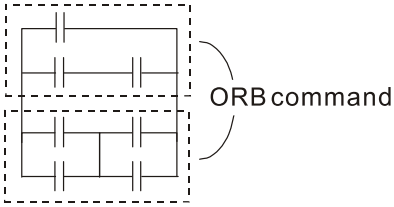

Figure 16-34

NOTE: In the case of ANB and ORB operations that connect a number of blocks, they should be combined to form a block or network from the top down or from left to right.

6. **MPS, MRD, MPP commands:** branching point memory for multiple outputs that enable multiple different outputs. The MPS command begins at a branching point, which refers to the intersection of horizontal and vertical lines. Control relies on the contact status along a single vertical line to determine whether the next contact can give a memory command. While each contact is basically able to give memory commands, in view of convenience and the PLC's capacity restrictions, this can be omitted from some places when editing a ladder diagram. You can use the structure of the ladder diagram to judge what kinds of contact memory commands are used.
   - MPS is indicated by use of the ┬ symbol. You can use this command consecutively up to eight times.
   - The MRD command is read from branching point memory; because logic states along any one vertical line must be the same, in order to continue analysis of other parts of the ladder diagram, the original contact status must be read. MRD is indicated by the ├ symbol.
   - The MPP command is read from the starting state of the uppermost branching point, and it is read from the stack (pop operation); because it is the final command along a vertical line, it indicates that the state of the vertical line can be concluded. MPP is indicated by the └ symbol.

     Although there should basically be no errors when using the foregoing analytical approach, the compiling program may sometimes omit identical state output, as shown in the following diagram.

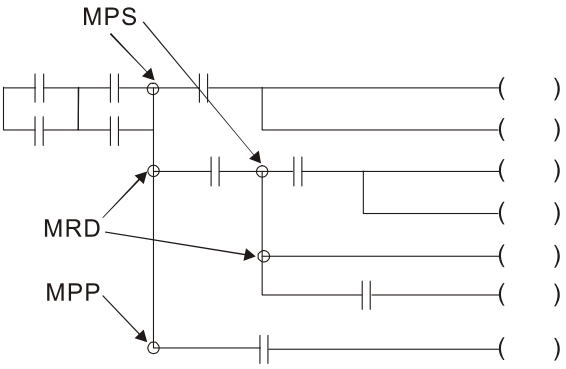

Figure 16-35

16-4-4 Common basic program design examples

Start, stop, and protection circuits

Some applications may require a brief close or brief break using a button to start and stop equipment. A protective circuit must therefore be designed to maintain continued operation in these situations. This protective circuit may employ one of the following methods.

Example 1: Priority stop protective circuit

When the start N.O. contact X1 = ON, and the stop N.C. contact X2 = OFF, Y1 = ON. If X2 switches to ON, coil Y1 is no longer electrified, and this is therefore referred to as priority stop.

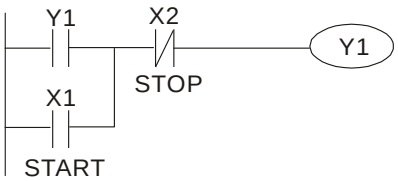

Figure 16-36

Example 2: Priority start protective circuit

When the start N.O. contact X1 = ON, and the stop N.C. contact X2 = OFF, Y1=ON, and coil Y1 is electrified and protected. If X2 switches to ON, coil Y1 still protects the contact and continues to be electrified, and this is therefore referred to as priority start.

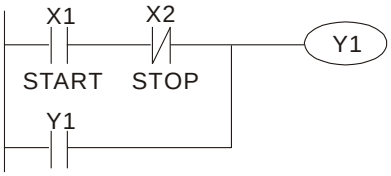

Figure 16-37

Example 3: Setting (SET) and reset (RST) command protective circuit

The following diagram shows a protective circuit composed of RST and SET commands.

- A priority stop occurs when you place the RST command after the SET command. Because the PLC executes programs from the top down, at the end of the program, the state of Y1 indicates whether coil Y1 is electrified. When X1 and X2 both actuate, Y1 loses power, and this is therefore referred to as priority stop.
- A priority start occurs when you place the SET command after the RST command. When X1 and X2 both actuate, Y1 electrifies, and this is therefore referred to as priority start.

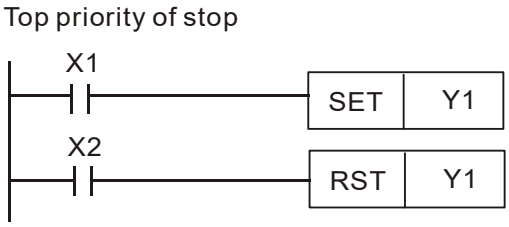

Figure 16-38

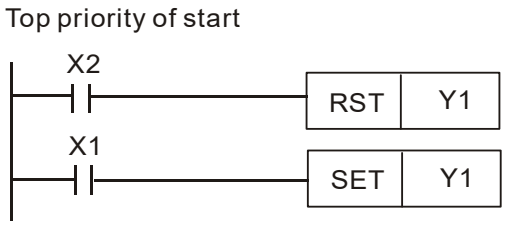

Figure 16-39

Commonly used control circuits

Example 4: Conditional control

X1 and X3 respectively start and stop Y1; and X2 and X4 respectively start and stop Y2. All have protective circuits. Because Y1's N.O. contact is in series with Y2's circuit, it becomes an AND condition for the actuation of Y2. The action of Y1 is therefore a condition for the action of Y2, and Y1 must actuate before Y2 can actuate.

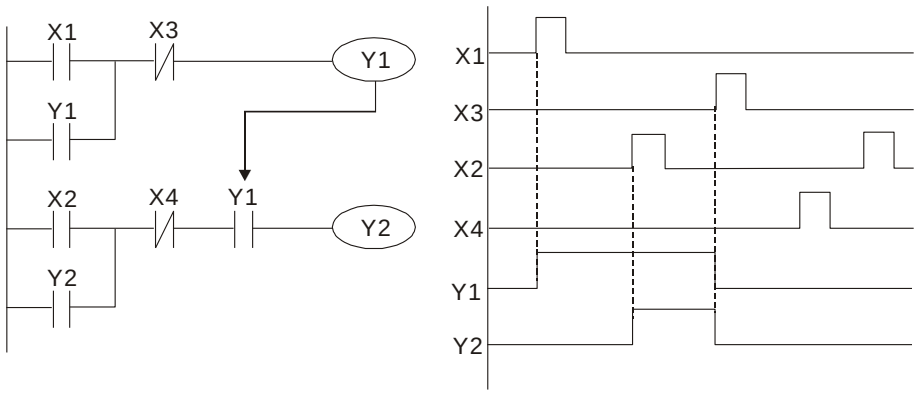

Figure 16-40

Example 5: Interlocking control

The diagram below shows an interlocking control circuit. Depending on which of the start contacts X1 or X2 becomes valid first, the corresponding output Y1 or Y2 actuates, and when one actuates, the other does not actuate. Y1 and Y2 cannot actuate at the same time (interlocking effect). Even if both X1 and X2 are valid at the same time, because the ladder diagram program is scanned from the top down, it is impossible for Y1 and Y2 to actuate at same time. This ladder diagram assigns priority only to Y1.

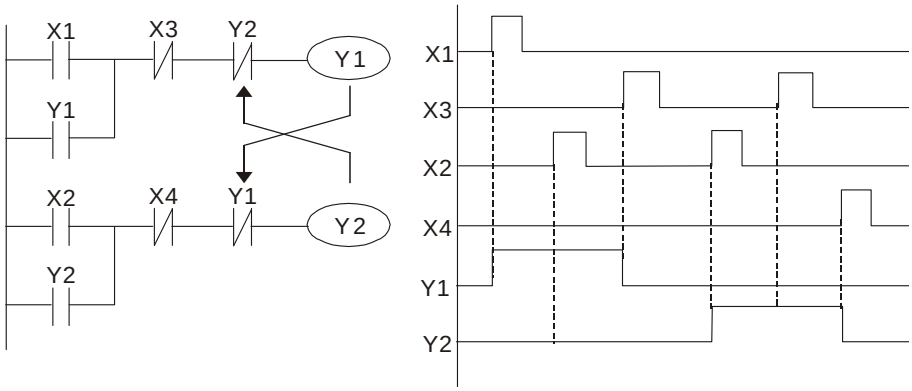

Figure 16-41

Example 6: Sequence control

If the N.C. contact of Y2 in the interlocking control configuration from example 5 is put in series with the Y1 circuit, to create an AND condition for actuation of Y1 (see diagram below), not only is Y1 a condition for the actuation of Y2 in this circuit, but the actuation of Y2 also stops the actuation of Y1. This configuration confirms the actuation order of Y1 and Y2.

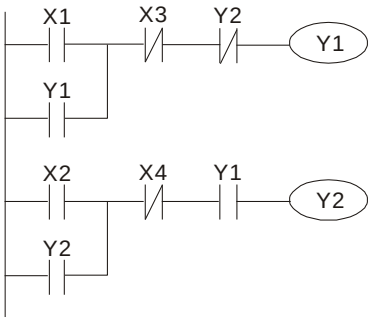

Figure 16-42

Example 7: Oscillating circuit

Oscillating circuit with a period of ΔT+ΔT

The diagram below shows a very simple ladder diagram. When starting to scan the Y1 N.C. contact, because the Y1 coil has lost power, the Y1 N.C. contact is closed. When the Y1 coil is then scanned, it is electrified, and the output is 1. When the Y1 N.C. contact is scanned in the next scanning cycle, because the Y1 coil is electrified, the Y1 N.C. contact is open, the Y1 coil then loses power, and the output is 0. Following repeated scanning, the output of Y1 coil has an oscillating waveform with a period of ΔT(ON)+ΔT(OFF).

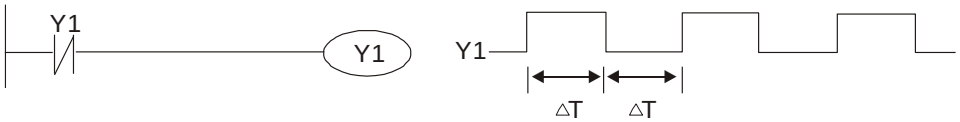

Figure 16-43

Oscillating circuit with a period of nT+ΔT

The ladder diagram shown below uses timer T0 to control coil Y1's electrified time. After Y1 is electrified, it causes timer T0 to close during the next scanning cycle, which causes the output from Y1 to oscillate as shown in the diagram below. The constant n is the timer's decimal setting value, and T is the clock cycle of the timer.

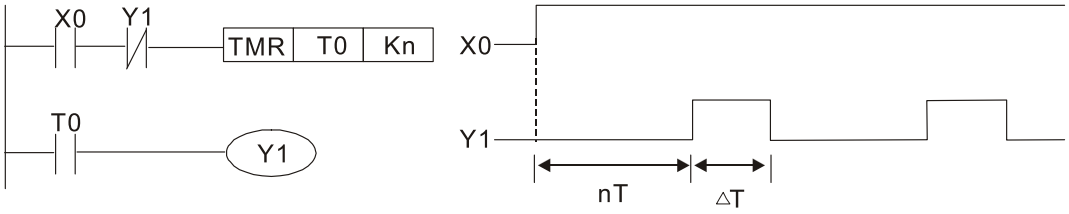

Figure 16-44

Example 8: Flashing circuit

The following diagram shows an oscillating circuit of a type commonly used to cause an indicator to flash or a buzzer to buzz. It uses two timers to control the ON and OFF time of Y1 coil. Here constants n1 and n2 are the setting values of timers T1 and T2, and T is the clock cycle of the timer.

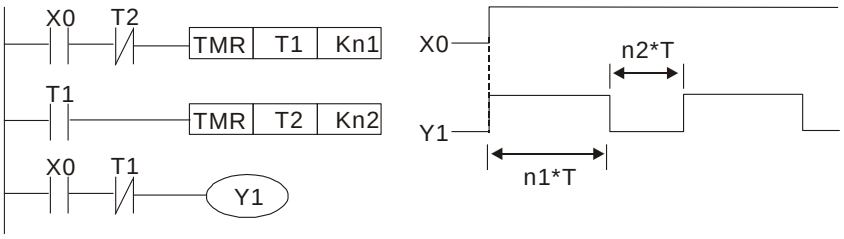

Figure 16-45

Example 9: Triggering circuit

In the diagram below, a rising edge in input X0 causes coil M0 to generate a single pulse for ΔT (length of one scanning cycle), and coil Y1 is electrified during this scanning cycle. Coil M0 loses power during the next scanning cycle, and N.C. contact M0 and N.C. contact Y1 are both closed. This causes coil Y1 to stay in an electrified state until there is another rising edge in input X0. This again causes the electrification of coil M0 and the start of another scanning cycle, while also causing coil Y1 to lose power, and so on. You can see the sequence of these actions in the diagram below. This type of circuit is commonly used to enable one input to perform two alternating actions. You can see from the time sequence in the diagram below that when input X0 is a square wave signal with a period of T, the output of coil Y1 is a square wave signal with a period of 2T.

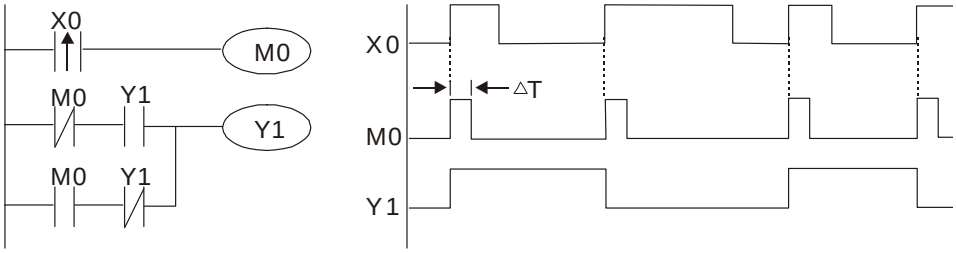

Figure 16-46

Example 10: Delay circuit

When input X0 is ON, because the corresponding NC contact is OFF, the timer T10 is in a no power state, and output coil Y1 is electrified. T10 receives power and begins to counter the time only after input X0 is OFF, and output coil Y1 is delayed for 100 seconds (K1000 × 0.1 sec. = 100 sec.) before losing power. You can see the sequence of actions in the diagram below.

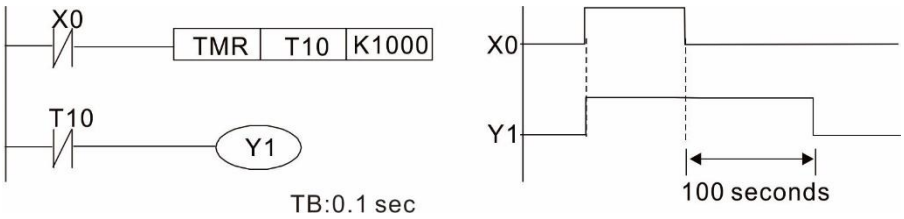

Figure 16-47

Example 11: The open/close delay circuit is composed of two timers; output Y4 has a delay no matter input X0 is ON or OFF.

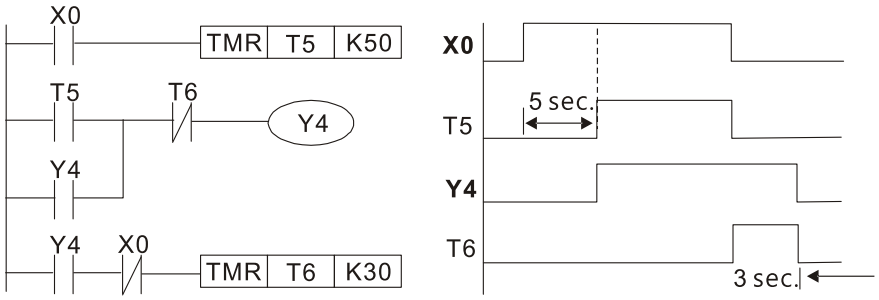

Figure 16-48

Example 12: Extended timing circuit

In the circuit in the ladder diagram on the left, the total delay time from the moment input X0 closes to the time output Y1 is electrified is (n1+n2) × T, where T is the clock cycle. The timers are T11 and T12, and the clock cycle is T.

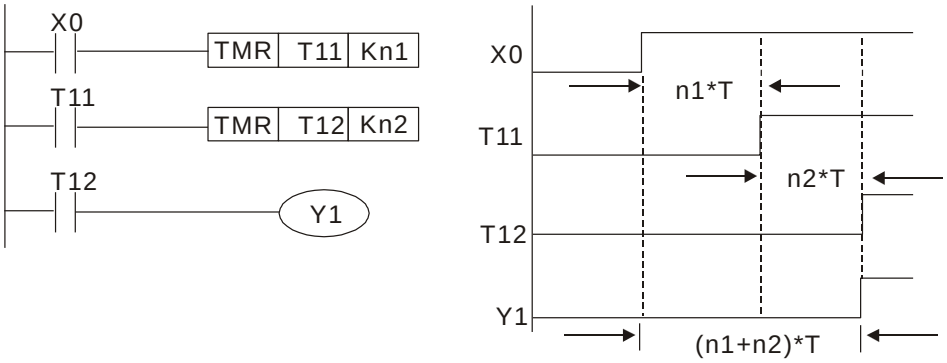

Figure 16-49

16-5 Various PLC Device Functions

Item	Specifications	Notes
Algorithmic control method	The program is stored internally, alternating back-and-forth scanning method.	The input point renews when the scanning starts, and the output point renews when the scanning ends.
Input / output control method	When the scan starts again after ending (after execution to the END command), the input/output is immediately refreshed.	
Algorithmic processing speed	Basic commands (several μs);	Application command (1 to several tens of μs)
Programming language	Command + ladder diagram	
Program capacity	2000 steps	
Input / output contacts	Digital input (X): 7; digital output (Y): 3 Analog input: 2; analog output: 1	

Table 16-7

Type	Device	Item		Range		Function
Relay bit form	X	External input relay		X0–X17, 16 points, octal number	Total 32 points	Corresponds to external input point
	Y	External output relay		Y0–Y17, 16 points, octal number		Corresponds to external output point
	M	Auxiliary Relay	General Use	M0–M799, 800 points	Total 1080 points	Contact can switch ON/OFF within the program
			Special purpose	M1000–M1279, 280 points		
	T	Timer	100 ms timer	T0–T79, 80 points	Total 80 points	Timers referred to by the TMR command; T contact with the same number switches ON when the time is reached.
	C	Counter	16-bit counter, general use	C0–C39, 40 points	Total 40 points	Counter referred to by the CNT command; C contact with the same number switches ON when the count is reached.
Register word data	T	Current timer value		T0–T79, 80 points		The contact switches ON when the time is reached.
	C	Current counter value		C0–C39, 16-bit counter 40 points		The counter contact switches ON when the count is reached.
	D	Data Register	Used to maintain power OFF	D0–D9, 10 points	Total 420 points	Used as data storage memory area
			General use	D10–D199, 190 points		
			Special purpose	D1000–D1219, 220 points		
Constant	K	Decimal	Single-byte	Setting Range: K-32,768–K32,767		
			Double-byte	Setting Range: K-2,147,483,648–K2,147,483,647		
	H	Hexadecimal	Single-byte	Setting Range: H0000–HFFFF		
			Double-byte	Setting Range: H00000000–HFFFFFFFF		
Serial communication port (program write / read)				RS-485 / USB / keypad port		
Analog input/output				Built-in two analog inputs and one analog output		
High-speed counting				Built-in a (MI7) 32-bit high-speed counter		
Function expansion module			Optional Accessories	--		
Communication Expansion Module			Optional Accessories	CMM-COP02 (CANopen)		

Table 16-8

16-5-1 Introduction to device functions

Input/output contact functions

Input contact X has this function: input contact X is connected with an input device, and reads input signals entering the PLC. There are no restrictions on the number of times that the input contact A or B appear in the program. The ON/OFF state of input contact X changes as the input device switches between ON and OFF; you cannot use a peripheral device (WPLSoft) to force contact X ON or OFF.

Output contact Y functions

The output contact Y sends an ON/OFF signal to drive the load connected to output contact Y. There are two types of output contacts: relays and transistors. There are no restrictions on the number of times that contact A or B of an output contact Y appear in a program, but it is recommended that you use the number of output coil Y only once in a program; otherwise the output state when the PLC performs program scanning is determined by the program's final output Y circuit.

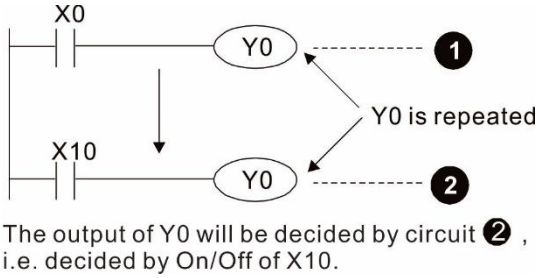

Figure 16-50

Numerical value, constant [K] / [H]

Constant	Single-byte	K	Decimal	K-32,768–K32,767
	Double-byte			K-2,147,483,648–K2,147,483,647
	Single-byte	H	Hexadecimal	H0000–HFFFF
	Double-byte			H00000000–HFFFFFFFF

Table 16-9

The PLC uses five types of numerical values to implement calculations based on its control tasks; the following topics explain the use and function of the different numerical values.

Binary Number, BIN

The PLC's numerical operations and memory employ binary numbers. The following table explains terms related to binary numbers.

bit	Bits are the fundamental units of binary values, and have a state of either 1 or 0.
Nibble	Comprised of a series of 4 bits (such as b3–b0); can be used to express a one-nibble decimal number 0–9 or hexadecimal number: 0–F.
Byte	Comprised of a series of two nibbles (i.e. 8 bits, b7–b0); can express a hexadecimal number: 00-FF.
Word	Comprised of a series of two bytes (i.e. 16 bits, b15–b0); can express a hexadecimal number with four nibbles: 0000–FFFF.
Double Word	Comprised of a series of two words (i.e. 32 bits, b31–b0); can express a hexadecimal number with eight nibbles: 00000000–FFFFFFFF

Table 16-10

The following diagram shows the relationship between bits, digits, nibbles, words, and double words in a binary system (see figure below).

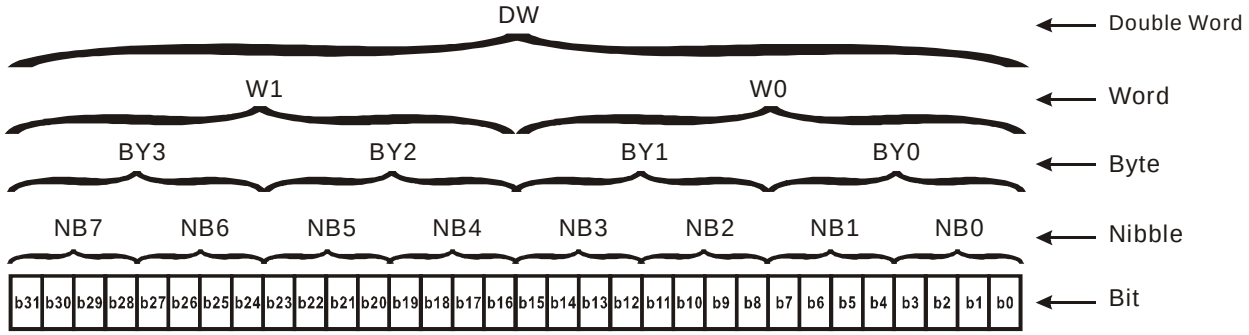

Figure 16-51

Octal Number, OCT

The external input and output terminals of a DVP-PLC are numbered using octal numbers.

Example: External input: X0–X7, X10–X17… (Device number table);

External output: Y0–Y7, Y10–Y17… (Device number table)

Decimal Number, DEC

A PLC uses decimal numbers for the following purposes:

☑ The setting values of timer T or counter C, such as TMR C0 K50 (K constant).

☑ The numbers of devices including M, T, C, or D, such as M10 or T30 (device number).

☑ An operand in an application command, such as MOV K123 D0 (K constant).

Binary Coded Decimal, BCD

Uses one nibble or four bits to express the data in a decimal number; a series of 16 bits can therefore express a decimal number with four nibbles. These are used to read the input value of a rotating numerical switch to input or output a numerical value to a seven-segment display drive.

Hexadecimal Number, HEX

A PLC uses hexadecimal numbers as operands in application commands, such as MOV H1A2B D0 (H constant).

Constant K

PLC's usually prefixed decimal numbers with K, such as K100. This indicates that it is a decimal number with a numeric value of 100.

Exceptions: You can combine K with a bit device X, Y, M, or S to produce data in the form of a nibble, byte, word, or double word, such as in the case of K2Y10 or K4M100. Here K1 represents a 4-bit combination, and K2–K4 represent 8-, 12-, and 16-bit combinations.

Constant H

PLC's usually prefixed hexadecimal numbers with H, such as in the case of H100. This indicates a hexadecimal number with a numeric value of 100.

Functions of auxiliary relays

Like an output relay Y, an auxiliary relay M has an output coil and contacts A and B, and you can use the output relay contacts any number of times in a program. You can use an auxiliary relay M to configure the control circuit, but cannot use the auxiliary relay to directly drive an external load. There are two types of auxiliary relays:

- Ordinary auxiliary relays:
  Ordinary auxiliary relays all revert to the OFF state when a power outage occurs while the PLC is running, and remains in the OFF state when power is restored.
- Special purpose auxiliary relays:
  Each special purpose auxiliary relay has its own specific use. Do not use any undefined special purpose auxiliary relays.

Timer functions

Timers use 100 ms as their timing unit. When the timing method is an upper time limit, and the current timer value = setting value, the timer output coil is energized. Timer setting values use decimal K values; you can also use the data register D as a setting value.

Actual timer setting time = timing units × set value

Counter features

Item	16-bit counter
Type	General Type
CT Direction:	Up
Setting	0–32,767
Designation of set value	Constant K or data register D
Change in current value	When the count reaches the setting value, it stops counting.
Output contact	When the count reaches the setting value, the contact switches ON and stays ON.
Reset	The current value reverts to 0 when an RST command is executed, and the contact reverts to OFF.
Contact actuation	All are actuated after the end of scanning.

Table 16-11

Counter functions

When a counter's counting pulse input signal switches from OFF to ON, if the counter's current value is equal to the setting value, the output coil switches ON. The setting value can be either a decimal K or a data register D.

16-bit counter:

- ☑ 16-bit counter setting range: K0–K32,767. When K0 and K1 are identical, the output contact is immediately ON during the first count.
- ☑ The current counter value is cleared from an ordinary counter when power to the PLC turns OFF.
- ☑ If you use the MOV command or WPLSoft to transmit a value greater than the setting value to the C0 current value register, when the next X1 switches from OFF to ON, the C0 counter contact changes to ON, and the current value changes to the setting value.
- ☑ You can set a counter's setting value directly using a constant K, or indirectly using the value in register D (not including special data registers D1000–D1199 or D2000–D2799).

☑ If the setting value is a constant K, the value must be a positive number. If the setting value is from data register D, the value can be either a positive or negative number. If using a data register, and the current value is 32,767, incrementing the count causes the count value to roll over to -32,768 as the count continues to accumulate.

Example

```
LD      X0
RST     C0
LD      X1
CNT     C0   K5
LD      C0
OUT     Y0
```

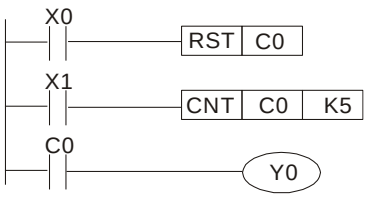

Figure 16-52

1. When X0 = ON and the RST command is executed, the current value of C0 reverts to 0, and the output contact reverts to OFF.
2. When X1 switches from OFF to ON, the current value of the counter is incremented by one (add one).
3. When the count in C0 reaches the set value K5, the contact C0 switches to ON, and the current value of C0 = setting value = K5.
   Afterwards, additional changes in X1 do not affect the count value, and C0 remains at K5.

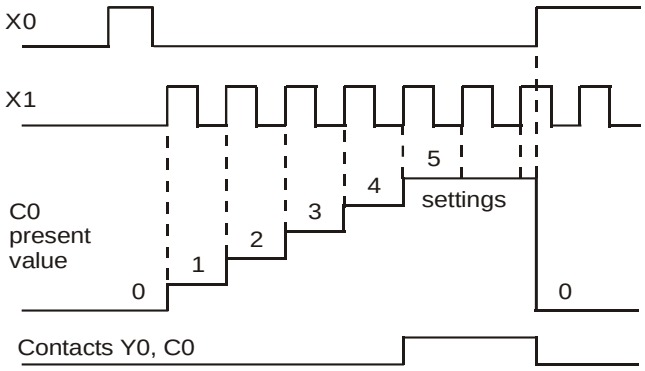

Figure 16-53

16-5-2 Introduction to special relay functions (special M)

R/W column: RO means read only; RW means read and write.

Special M	Function Descriptions	R/W *
M1000	Monitors N.O. contact (contact A). N.O. while RUN, contact A. This contact is ON while in the RUN state.	RO
M1001	Monitors N.C. contact (contact B). NC while RUN, contact B. This contact is OFF while in the RUN state.	RO
M1002	Initiates a forward pulse (the instant RUN is ON). Initial pulse, contact A. Produces a forward pulse when RUN begins; pulse width = scan cycle.	RO
M1003	Initiates a reverse pulse (the instant RUN is OFF). Initial pulse, contact A. Produces a reverse pulse when RUN ends; pulse width = scan cycle.	RO
M1004	--	--
M1005	Drive malfunction instructions	RO
M1006	Drive has no output	RO
M1007	Drive direction FWD(0) / REV(1)	RO
M1008 – M1010	--	--
M1011	10 ms clock pulse, 5 ms ON / 5 ms OFF.	RO
M1012	100 ms clock pulse, 50 ms ON / 50 ms OFF.	RO
M1013	1 sec. clock pulse, 0.5 s ON / 0.5 s OFF	RO
M1014	1 min. clock pulse, 30 s ON / 30 s OFF	RO
M1015	Frequency reached (when used with M1025)	RO
M1016	Parameter read/write error	RO
M1017	Parameter write successful	RO
M1018	--	--
M1019	--	--
M1020	Zero flag	RO
M1021	Borrow flag	RO
M1022	Carry flag	RO
M1023	Divisor is 0	RO
M1024	--	--
M1025	Drive frequency = set frequency (ON) Drive frequency = 0 (OFF)	RW
M1026	Drive operating direction FWD (OFF) / REV (ON)	RW
M1027	Drive Reset	RW
M1028 – M1037	--	--
M1038	MI7 count begins	RW
M1039	Reset MI7 count value	RW
M1040	Hardware power (Servo On)	RW
M1041	--	--
M1042	Quick Stop	RW
M1043	--	--
M1044	Pause (Halt)	RW
M1045 – M1051	--	--
M1052	Lock frequency (lock, frequency locked at the current operating frequency)	RW
M1053 – M1055	--	--
M1056	Hardware already has power (Servo On Ready)	RO
M1057	--	--
M1058	On Quick Stopping	RO
M1080	485 exception error	RO

Special M	Function Descriptions	R/W *
M1081	485 check sum or data format is wrong	RO
M1085	485 data have been updated	RW
M1086	485 data receives a request	RW
M1090	OFF (Refer to Pr.00-29 for more information)	RO
M1091	HAND (Refer to Pr.00-29 for more information)	RO
M1092	AUTO (Refer to Pr.00-29 for more information)	RO
M1100	LOCAL (Refer to Pr.00-29 for more information)	RO
M1101	REMOTE (Refer to Pr.00-29 for more information)	RO

Table 16-12

16-5-3 Introduction to special register functions (special D)

Special D	Function Descriptions	R/W *
D1000	--	--
D1001	Device system program version	RO
D1002	Program capacity	RO
D1003	Total program memory content	RO
D1004 – D1009	--	--
D1010	Current scan time (units: 0.1 ms)	RO
D1011	Minimum scan time (units: 0.1 ms)	RO
D1012	Maximum scan time (units: 0.1 ms)	RO
D1013 – D1017	--	--
D1018	Current integral value	RO
D1019	Force setting for PID I integral	RW
D1020	Output frequency (0.00–599.00 Hz)	RO
D1021	Output current (####.#A)	RO
D1022	--	--
D1023	Communication expansion card number 0: No expansion card 1: DeviceNet Slave 2: Profibus-DP Slave 3: CANopen Slave 5: EtherNet/IP Slave	RO
D1024 – D1026	--	--
D1027	PID calculation frequency command (frequency command after PID calculation)	RO
D1028	AVI value (0.00–100.00%)	RO
D1029	ACI value (0.00–100.00%)	RO
D1030 – D1034	--	--
D1035	VR value (0.00–100.00%)	RO
D1036	Servo error bit	RO

Special D	Function Descriptions	R/W *
D1037	Drive output frequency	RO
D1038	DC bus voltage	RO
D1039	Output voltage	RO
D1040	Analog output value AFM (0.00–100.00%)	RW
D1041 – D1042	--	--
D1043	Can be user-defined (is displayed on panel when Pr.00-04 is set to 28; display method is Cxxxx)	RW
D1044 – D1049	--	--
D1050	Actual operation mode 0: Speed	RO
D1051 – D1053	--	--
D1054	MI7 current calculated count value (low word)	RO
D1055	MI7 current calculated count value (high word)	RO
D1056	Rotating speed corresponding to MI7	RO
D1057	MI7's rotating speed ratio	RW
D1058	MI7 refresh rate (ms) corresponding to rotating speed	RW
D1059	Number of nibbles of rotating speed corresponding to MI7 (0–3)	RW
D1060	Operation mode setting 0: Speed	RW
D1061	485 Modbus communications time-out time (ms)	RW
D1062	Torque command (torque limit in speed mode)	RW
D1063 – D1069	--	--
D1100	Target frequency	RO
D1101	Target frequency (must be operating)	RO
D1102	Reference frequency	RO
D1103 – D1106	--	--
D1107	π (Pi) low word	RO
D1108	π (Pi) high word	RO
D1109	Random number	RO
D1600	The information length that the present 485 received	RO
D1601	The packet accumulation that the present 485 received	RO
D1610	The initial disk D to stack packet	RW

Table 16-13

16-5-4 PLC Communication address

Device	Range	Type	Address (Hex)
X	00–17 (Octal)	bit	0400–040FF
Y	00–17 (Octal)	bit	0500–050F
T	00–79	bit/word	0600–064F
M	000–799	bit	0800–0B1F
M	1000–1279	bit	0BE8–0CFF
C	0–39	bit/word	0E00–0E27
D	00–199	word	1000–10C7
D	1000–1219	word	13E8–14C3

Table 16-14

Command codes that can be used

Function Code	Function Descriptions	Function target
H1	Coil status read	Y, M, T, C
H2	Input status read	X, Y, M, T, C
H3	Read single unit of data	T, C, D
H5	Force single coil status change	Y, M, T, C
H6	Write single unit of data	T, C, D
HF	Force multiple coil status change	Y, M, T, C
H10	Write multiple units of data	T, C, D

Table 16-15

NOTE:

When PLC functions have been activated, the MS300 can match the PLC and drive parameters; this method uses different addresses for drives (default station number is 1, PLC sets station number as 2).

16-6 Introduction to the Command Window

16-6-1 Overview of basic commands

Ordinary commands

Command Code	Function	OPERAND	Execution Speed (μs)
LD	Load contact A	X, Y, M, T, C	0.8
LDI	Load contact B	X, Y, M, T, C	0.8
AND	Connect contact A in series	X, Y, M, T, C	0.8
ANI	Connect contact B in series	X, Y, M, T, C	0.8
OR	Connect contact A in parallel	X, Y, M, T, C	0.8
ORI	Connect contact B in parallel	X, Y, M, T, C	0.8
ANB	Series circuit block	N/A	0.3
ORB	Parallel circuit block	N/A	0.3
MPS	Save to stack	N/A	0.3
MRD	Stack read (pointer does not change)	N/A	0.3
MPP	Read stack	N/A	0.3

Table 16-16

Output command

Command Code	Function	OPERAND	Execution Speed (μs)
OUT	Drive coil	Y, M	1
SET	Action continues (ON)	Y, M	1
RST	Clear contact or register	Y, M, T, C, D	1.2

Table 16-17

Timer, counter

Command Code	Function	OPERAND	Execution Speed (μs)
TMR	16-bit timer	T-K or T-D commands	1.1
CNT	16-bit counter	C-K or C-D (16-bit)	0.5

Table 16-18

Main control command

Command Code	Function	OPERAND	Execution Speed (μs)
MC	Common series contact connection	N0–N7	0.4
MCR	Common series contact release	N0–N7	0.4

Table 16-19

Contact rising edge/falling edge detection command

Command Code	Function	OPERAND	Execution Speed (μs)
LDP	Start of rising edge detection action	X, Y, M, T, C	1.1
LDF	Start of falling edge detection action	X, Y, M, T, C	1.1
ANDP	Rising edge detection series connection	X, Y, M, T, C	1.1
ANDF	Falling edge detection series connection	X, Y, M, T, C	1.1
ORP	Rising edge detection parallel connection	X, Y, M, T, C	1.1
ORF	Falling edge detection parallel connection	X, Y, M, T, C	1.1

Table 16-20

Upper / lower differential output commands

Command Code	Function	OPERAND	Execution Speed (μs)
PLS	Upper differential output	Y, M	1.2
PLF	Lower differential output	Y, M	1.2

Table 16-21

Stop command

Command Code	Function	OPERAND	Execution Speed (μs)
END	Program conclusion	N/A	0.2

Table 16-22

Other commands

Command Code	Function	OPERAND	Execution Speed (μs)
NOP	No action	N/A	0.2
INV	Inverse of operation results	N/A	0.2
P	Index	P	0.3

Table 16-23

16-6-2 Detailed explanation of basic commands

Command	Function					
LD	Load contact A					
Operand	X0–X17	Y0–Y17	M0–M799	T0–159	C0–C79	D0–D399
	✓	✓	✓	✓	✓	-

Explanation: Use the LD command for contact A starting at the left busbar or contact A starting at a contact circuit block; its function is to save current content and save the acquired contact status in the cumulative register.

Example: Ladder diagram:

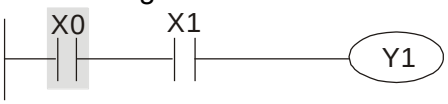

Command code:		Description:
LD	**X0**	Load Contact A of X0
AND	X1	Create a series connection to contact A of X1
OUT	Y1	Drive Y1 coil

Command	Function					
LDI	Load contact B					
Operand	X0–X17	Y0–Y17	M0–M799	T0–159	C0–C79	D0–D399
	✓	✓	✓	✓	✓	-

Explanation: Use the LDI command for contact B starting at the left busbar or contact B starting at a contact circuit block; its function is to save current content and save the acquired contact status in the cumulative register.

Example: Ladder diagram:

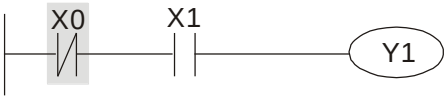

Command code:		Description:
LDI	**X0**	Load Contact B of X0
AND	X1	Create a series connection to contact A of X1
OUT	Y1	Drive Y1 coil

Command	Function					
AND	Connect contact A in series					
Operand	X0–X17	Y0–Y17	M0–M799	T0–159	C0–C79	D0–D399
	✓	✓	✓	✓	✓	-

Explanation: Use the AND command to create a series connection to contact A; its function is to first read the current status of the designated series contact and the logical operation results before contact in order to perform "AND" operation; saves the results in the cumulative register.

Example: Ladder diagram:

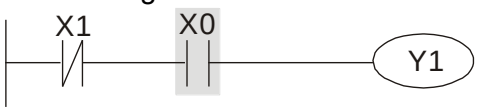

Command code:		Description:
LDI	X1	Load Contact B of X1
AND	**X0**	Create a series connection to contact A of X0
OUT	Y1	Drive Y1 coil

Command	Function					
ANI	Connect contact B in series					
Operand	X0–X17	Y0–Y17	M0–M799	T0–159	C0–C79	D0–D399
	✓	✓	✓	✓	✓	-

Explanation

Use the ANI command to create a series connection to contact B; its function is to first read the current status of the designated series contact and the logical operation results before contact in order to perform "AND" operation; saves the results in the cumulative register.

Example

Ladder diagram:

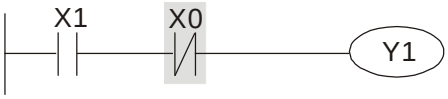

Command code:		Description:
LD	X1	Load Contact A of X1
ANI	**X0**	Create a series connection to contact B of X0
OUT	Y1	Drive Y1 coil

Command	Function					
OR	Connect contact A in parallel					
Operand	X0–X17	Y0–Y17	M0–M799	T0–159	C0–C79	D0–D399
	✓	✓	✓	✓	✓	-

Explanation

Use the OR command to establish a parallel connection to contact A; its function is to first read the current status of the designated series contact and the logical operation results before contact in order to perform "OR" operation; saves the results in cumulative register.

Example

Ladder diagram:

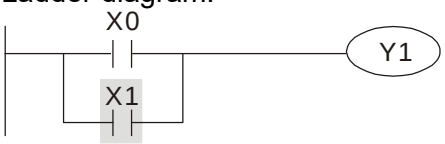

Command code:		Description:
LD	X0	Load Contact A of X0
OR	**X1**	Create a series connection to contact A of X1
OUT	Y1	Drive Y1 coil

Command	Function					
ORI	Connect contact B in parallel					
Operand	X0–X17	Y0–Y17	M0–M799	T0–159	C0–C79	D0–D399
	✓	✓	✓	✓	✓	-

Explanation

Use the ORI command to establish a parallel connection to contact B; its function is to first read the current status of the designated series contact and the logical operation results before contact in order to perform "OR" operation; saves the results in cumulative register.

Example

Ladder diagram:

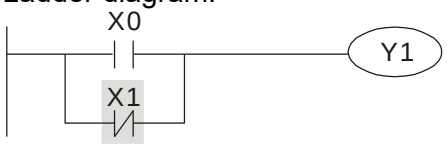

Command code:		Description:
LD	X0	Load Contact A of X0
ORI	**X1**	Create a series connection to contact B of X1
OUT	Y1	Drive Y1 coil

Command	Function
ANB	Series circuit block
Operand	N/A

Explanation

ANB performs an "AND" operation on the previously saved logic results and the current cumulative register content.

Example

Ladder diagram:

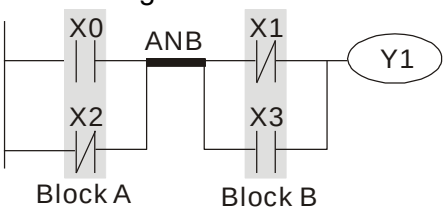

Command code:		Description:
LD	X0	Load Contact A of X0
ORI	X2	Establish a parallel connection to contact B of X2
LDI	X1	Load Contact B of X1
OR	X3	Establish a parallel connection to contact A of X3
ANB		Series circuit block
OUT	Y1	Drive Y1 coil

Command	Function
ORB	Parallel circuit block
Operand	N/A

Explanation

ORB performs an "OR" operation on the previously saved logic results and the current cumulative register content.

Example

Ladder diagram:

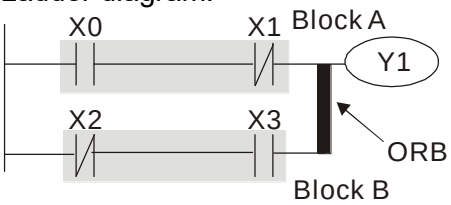

Command code:		Description:
LD	X0	Load Contact A of X0
ANI	X1	Establish a parallel connection to contact B of X1
LDI	X2	Load Contact B of X2
AND	X3	Establish a parallel connection to contact A of X3
ORB		Parallel circuit block
OUT	Y1	Drive Y1 coil

Command	Function
MPS	Save to stack
Operand	N/A

Explanation

Saves the current content of the cumulative register to the stack (add one to the stack pointer).

Command	Function
MRD	Read stack (pointer does not change)
Operand	N/A

Explanation

Reads the stack content and saves to the cumulative register (the stack pointer does not change).

Command	Function
MPP	Read stack
Operand	N/A

Explanation

Retrieves the result of the previously saved logical operation from the stack, and saves to the cumulative register. (subtract one from stack pointer)

Example

Ladder diagram:

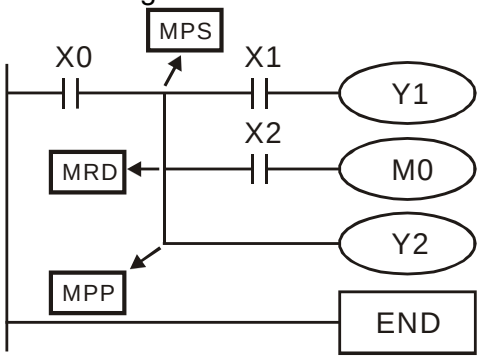

Command code:		Description:
LD	X0	Load Contact A of X0
MPS		Save to the stack
AND	X1	Create a series connection to contact A of X1
OUT	Y1	Drive Y1 coil
MRD		Read the stack (pointer does not change)
AND	X2	Create a series connection to contact A of X2
OUT	M0	Drive M0 coil
MPP		Read stack
OUT	Y2	Drive Y2 coil
END		Program conclusion

Command	Function					
OUT	Drive coil					
Operand	X0–X17	Y0–Y17	M0–M799	T0–159	C0–C79	D0–D399
	-	✓	✓	-	-	-

Explanation

Outputs the result of the logical operation before the OUT command to the designated element.

Coil contact action:

Result:	Out command		
	Coil	Access Point:	
		Contact A (N.O.)	Contact B (N.C.)
FALSE	OFF	Not conducting	Conducting
TRUE	ON	Conducting	Not conducting

Example

Ladder diagram:

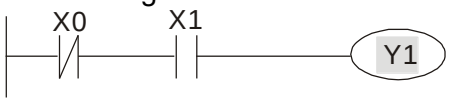

Command code:		Description:
LD	X0	Load Contact B of X0
AND	X1	Establish a parallel connection to contact A of X1
OUT	**Y1**	Drive Y1 coil

Command	Function					
SET	Action continues (ON)					
Operand	X0–X17	Y0–Y17	M0–M799	T0–159	C0–C79	D0–D399
	-	✓	✓	-	-	-

Explanation

Sets the designated element to ON, and maintains it in an ON state, regardless of whether the SET command is still driven. Use the RST command to set the element as OFF.

Example

Ladder diagram:

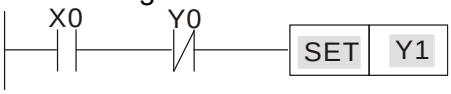

Command code:		Description:
LD	X0	Load Contact A of X0
AN	Y0	Establish a parallel connection to contact B of Y0
SET	**Y1**	Action continues (ON)

Command	Function					
RST	Clear contact or register					
Operand	X0–X17	Y0–Y17	M0–M799	T0–159	C0–C79	D0–D399
	-	✓	✓	✓	✓	✓

Explanation

Resets the designated element as described.

Element	Mode
Y, M	Both coil and contact are set as OFF.
T, C	Sets the current timing or count value to 0, and both the coil and contact are set to OFF.
D	Sets the content value to 0.

If the RST command is not executed, the status of the designated element remains unchanged.

Example

Ladder diagram:

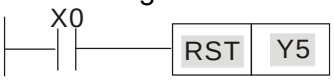

Command code:		Description:
LD	X0	Load Contact A of X0
RST	**Y5**	Clear the contact or register

Command	Function	
TMR	16-bit timer	
Operand	T-K	T0–T159, K0–K32,767
	T-D	T0–T159, D0–D399

Explanation

Electrifies the designated timer coil, and the timer begins timing. The contact's action is as follows when the timing value reaches the designated setting value (timing value ≥ setting value):

N.O. (Normally Open) contact	Open circuit
N.C. (Normally Closed) contact	Closed circuit

If the RST command is not executed, the status of the designated element remains unchanged.

Example

Ladder diagram:

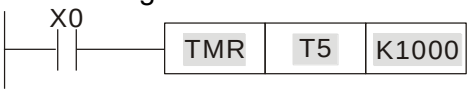

Command code:		Description:
LD	X0	Load Contact A of X0
TMR	**T5** **K1000**	T5 timer Set value as K1000

Command	Function	
CNT	16-bit counter	
Operand	C-K	C0–C79, K0–K32,767
	C-D	C0–C79, D0–D399

Explanation

When you execute the CNT command from OFF to ON, switch the designated counter coil from no power to electrified and add one to the counter's count value. When the count reaches the designated value (count value = setting value), the contact has the following action:

N.O. (Normally Open) contact	Open circuit
N.C. (Normally Closed) contact	Closed circuit

After reaching the count value, the contact and count value both remain unchanged even with continued count pulse input. Use the RST command to restart or clear the count.

Example

Ladder diagram:

Command code:		Description:
LD	X0	Load Contact A of X0
CNT	**C2** **K100**	C2 counter Set value as K100

Command	Function
MC / MCR	Connect /release a common series contact
Operand	N0–N7

Explanation

MC is the main control initiation command, and any command between MC and MCR is executed normally. When the MC command is OFF, any command between MC and MCR acts as follows:

Determination of Commands	Description
Ordinary timer	The timing value reverts to 0, the coil loses power, and the contact does not operate.
Counter	The coil loses power, and the count value and contact stay in their current state.
Coil driven by OUT command	None receives power.
Elements driven by SET, RST commands	They remain in their current state.
Application commands	None are actuated.

MCR is the main control stop command, and is placed at the end of the main control program. There may not be any contact command prior to the MCR command.
The MC-MCR main control program commands support a nested program structure with a maximum of only eight levels; use in the order N0–N7. Refer to the following program example:

Example

Ladder diagram:

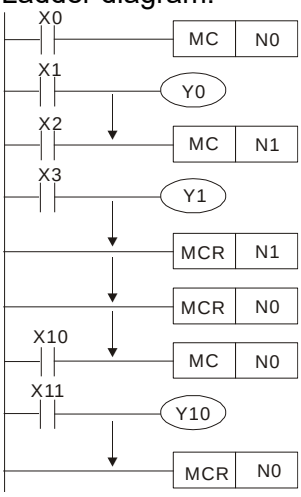

Command code:		Description:
LD	X0	Load Contact A of X0
MC	**N0**	Connection of N0 common series contact
LD	X1	Load Contact A of X1
OUT	Y0	Drive Y0 coil
:		
LD	X2	Load Contact A of X2
MC	**N1**	Connection of N1 common series contact
LD	X3	Load Contact A of X3
OUT	Y1	Drive Y1 coil
:		
MCR	**N1**	Release N1 common series contact
:		

MCR	**N0**	Release N0 common series contact
:		
LD	X10	Load Contact A of X10
MC	**N0**	Connection of N0 common series contact
LD	X11	Load Contact A of X11
OUT	Y10	Drive Y10 coil
:		
MCR	**N0**	Release N0 common series contact

Command	Function					
LDP	Start of rising edge detection action					
Operand	X0–X17	Y0–Y17	M0–M799	T0–159	C0–C79	D0–D399
	✓	✓	✓	✓	✓	-

Explanation

The LDP command has the same use as LD, but its action is different. Its function is to save the current content while also saving the detected state of the rising edge of the contact to the cumulative register.

Example

Ladder diagram:

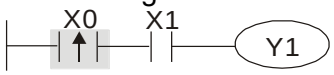

Command code:		Description:
LDP	**X0**	Start of X0 rising edge detection action
AND	X1	Create a series connection to contact A of X1
OUT	Y1	Drive Y1 coil

Command	Function					
LDF	Start of falling edge detection action					
Operand	X0–X17	Y0–Y17	M0–M799	T0–159	C0–C79	D0–D399
	✓	✓	✓	✓	✓	-

Explanation

The LDF command has the same use as LD, but its action is different. Its function is to save the current content while also saving the detected state of the falling edge of the contact to the cumulative register.

Example

Ladder diagram:

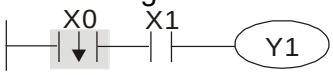

Command code:		Description:
LDF	**X0**	Start of X0 falling edge detection action
AND	X1	Create a series connection to contact A of X1
OUT	Y1	Drive Y1 coil

Command	Function					
ANDP	Rising edge detection series connection					
Operand	X0–X17	Y0–Y17	M0–M799	T0–159	C0–C79	D0–D399
	✓	✓	✓	✓	✓	-

Explanation: Use the ANDP command for a contact rising edge detection series connection.

Example

Ladder diagram:

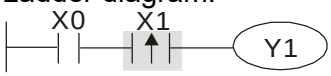

Command code:		Description:
LD	X0	Load Contact A of X0
ANDP	**X1**	X1 Rising edge detection series connection
OUT	Y1	Drive Y1 coil

Command	Function					
ANDF	Falling edge detection series connection					
Operand	X0–X17	Y0–Y17	M0–M799	T0–159	C0–C79	D0–D399
	✓	✓	✓	✓	✓	-

Explanation: Use the ANDF command for a contact falling edge detection series connection.

Example

Ladder diagram:

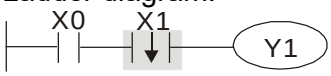

Command code:		Description:
LD	X0	Load Contact A of X0
ANDF	**X1**	X1 Falling edge detection series connection
OUT	Y1	Drive Y1 coil

Command	Function					
ORP	Rising edge detection parallel connection					
Operand	X0–X17	Y0–Y17	M0–M799	T0–159	C0–C79	D0–D399
	✓	✓	✓	✓	✓	-

Explanation: Use the ORP command for a contact rising edge detection parallel connection.

Example

Ladder diagram:

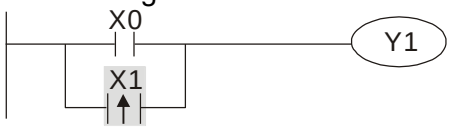

Command code:		Description:
LD	X0	Load Contact A of X0
ORP	**X1**	X1 Rising edge detection parallel connection
OUT	Y1	Drive Y1 coil

Command	Function					
ORF	Falling edge detection parallel connection					
Operand	X0–X17	Y0–Y17	M0–M799	T0–159	C0–C79	D0–D399
	✓	✓	✓	✓	✓	-

Explanation: Use the ORF command for a contact falling edge detection parallel connection.

Example

Ladder diagram:

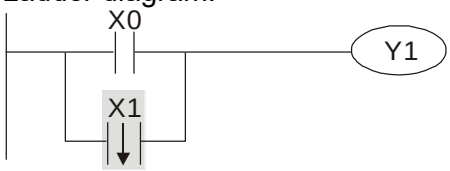

Command code:		Description:
LD	X0	Load Contact A of X0
ORF	**X1**	X1 Falling edge detection parallel connection
OUT	Y1	Drive Y1 coil

Command	Function					
PLS	Upper differential output					
Operand	X0–X17	Y0–Y17	M0–M799	T0–159	C0–C79	D0–D399
	-	✓	✓	-	-	-

Explanation

Upper differential output command: when X0 switches from OFF to ON (rising edge-triggered), the PLS command is executed, and M0 sends one pulse with the pulse length consisting of one scanning period.

Example

Ladder diagram:

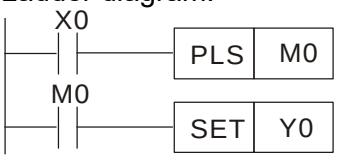

Timing diagram:

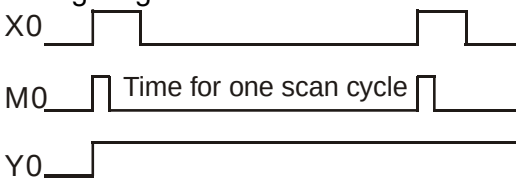

Command code:		Description:
LD	X0	Load Contact A of X0
PLS	**M0**	M0 Upper differential output
LD	M0	Load Contact A of M0
SET	Y0	Y0 Action continues (ON)

Command	Function					
PLF	Lower differential output					
Operand	X0–X17	Y0–Y17	M0–M799	T0–159	C0–C79	D0–D399
	-	✓	✓	-	-	-

Explanation

Lower differential output command: when X0 switches from ON to OFF (falling edge-triggered), the PLF command is executed, and M0 sends one pulse with the pulse length consisting of one scanning period.

Example

Ladder diagram:

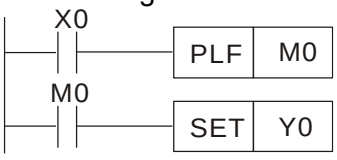

Timing diagram:

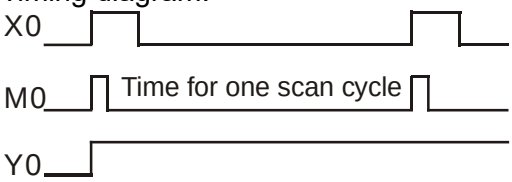

Command code:		Description:
LD	X0	Load Contact A of X0
PLF	**M0**	M0 Lower differential output
LD	M0	Load Contact A of M0
SET	Y0	Y0 Action continues (ON)

Command	Function
END	End of Program
Operand	N/A

Explanation

An END command must be added to the end of a ladder diagram program or command program. The PLC scans the program from address 0 to the END command, and then returns to address 0 and begins scanning again.

Command	Function
NOP	No action
Operand	N/A

Explanation

The NOP command does not perform any operation in the program. Because execution of this command retains the original logical operation results, you can use it in the following situation: use the NOP command instead of a command that is deleted without changing the program length.

Example

Ladder diagram:

NOP command is simplified and does not display when the ladder diagram displays.

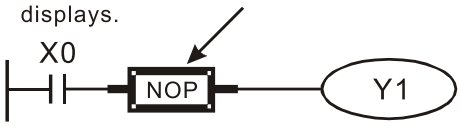

Command code:		Description:
LD	X0	Load Contact B of X0
NOP		No action
OUT	Y1	Drive Y1 coil

Command	Function
INV	Inverse of operation results
Operand	N/A

Explanation

Saves the result of the logic inversion operation prior to the INV command in the cumulative register.

Example

Ladder diagram:

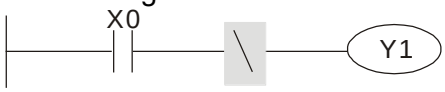

Command code:		Description:
LD	X0	Load Contact A of X0
INV		Inverse of operation results
OUT	Y1	Drive Y1 coil

Command	Function
P	Pointer
Operand	P0–P255

Explanation

Use pointer P as the target in a subprogram call (command API 01 CALL). Using P does not require starting from zero, but the number cannot be used repeatedly; otherwise, an unpredictable error occurs.

Example

Ladder diagram:

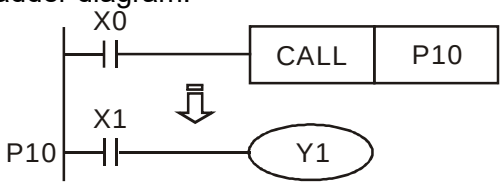

Command code:		Description:
LD	X0	Load Contact A of X0
CALL	P10	Call command CALL to P10
:		
P10		Pointer P10
LD	X1	Load Contact A of X1
OUT	Y1	Drive Y1 coil

16-6-3 Overview of application commands

Classification	API	Command Code		P Command	Function	STEPS	
		16 bit	32 bit			16 bit	32 bit
Circuit Control	01	CALL	-	✓	Call subprogram	3	-
	2	SRET	-	-	End a subprogram	1	-
	06	FEND	-	-	End a main program	1	-
Send Comparison	10	CMP	DCMP	✓	Compare set output	7	13
	11	ZCP	DZCP	✓	Range comparison	9	17
	12	MOV	DMOV	✓	Move data	5	9
	15	BMOV	–	✓	Send all	7	–
Four Logical Operations	20	ADD	DADD	✓	BIN addition	7	13
	21	SUB	DSUB	✓	BIN subtraction	7	13
	22	MUL	DMUL	✓	BIN multiplication	7	13
	23	DIV	DDIV	✓	BIN division	7	13
	24	INC	DINC	✓	BIN add one	3	5
	25	DEC	DDEC	✓	BIN subtract one	3	5
Rotational Displacement	30	ROR	DROR	✓	Right rotation	5	–
	31	ROL	DROL	✓	Left rotation	5	–
Data Process	40	ZRST	–	✓	Clear range	5	-
	49	–	DFLT	✓	Convert BIN whole number to binary floating point number	-	9
Floating Point Operation	110	–	DECMP	✓	Compare binary floating point numbers	–	13
	111	–	DEZCP	✓	Compare binary floating point number range	–	17
	116	–	DRAD	✓	Convert angle to diameter	–	9
	117	–	DDEG	✓	Convert diameter to angle	–	9
	120	–	DEADD	✓	Add binary floating point numbers	–	13
	121	–	DESUB	✓	Subtract binary floating point numbers	–	13
	122	–	DEMUL	✓	Multiply binary floating point numbers	–	13
	123	–	DEDIV	✓	Divide binary floating point numbers	–	13
	124	–	DEXP	✓	Find exponent of a binary floating point number	–	9
	125	–	DLN	✓	Find natural logarithm of a binary floating point number	–	9
	127	–	DESQR	✓	Find the square root of binary floating point number	–	9
	129	–	DINT	✓	Convert binary floating point number to BIN whole number	–	9
	130	–	DSIN	✓	Find the sine of a binary floating point number	–	9
	131	–	DCOS	✓	Find the cosine of a binary floating point number	–	9
	132	–	DTAN	✓	Find the tangent of a binary floating point number	–	9
	133	–	DASIN	✓	Find the arcsine of a binary floating point number	–	9
	134	–	DACOS	✓	Find the arccosine of a binary floating point number	–	9
	135	–	DATAN	✓	Find the arctangent of a binary floating point number	–	9
Floating Point Operation	136	–	DSINH	✓	Find the hyperbolic sine of a binary floating point number	–	9
	137	–	DCOSH	✓	Find the hyperbolic cosine of a binary floating point number	–	9

Classification	API	Command Code		P Command	Function	STEPS	
		16 bit	32 bit			16 bit	32 bit
	138	–	DTANH	✓	Find the hyperbolic tangent of a binary floating point number	–	9
Calendar	160	TCMP	–	✓	Compare calendar data	11	–
	161	TZCP	–	✓	Compare calendar data range	9	–
	162	TADD	–	✓	Calendar data addition	7	–
	163	TSUB	–	✓	Calendar data subtraction	7	–
	166	TRD	–	✓	Calendar data read	3	–
GRAY Code	170	GRY	DGRY	✓	Convert BIN to GRAY code	5	9
	171	GBIN	DGBIN	✓	Convert GRAY code to BIN	5	9
Data Processing	202	SCAL	DSCAL	✓	Scale value operation	5	9
Contact Form Logical Operation	215	LD&	DLD&	-	Contact form logical operation LD#	5	9
	216	LD|	DLD|	-	Contact form logical operation LD#	5	9
	217	LD^	DLD^	-	Contact form logical operation LD#	5	9
	218	AND&	DAND&	-	Contact form logical operation AND#	5	9
	219	ANDl	DANDl	-	Contact form logical operation AND#	5	9
	220	AND^	DAND^	-	Contact form logical operation AND#	5	9
	221	OR&	DOR&	-	Contact form logical operation OR#	5	9
	222	OR|	DOR|	-	Contact form logical operation OR#	5	9
	223	OR^	DOR^	-	Contact form logical operation OR#	5	9
Contact Form Comparison Command	224	LD=	DLD=	-	Contact form compare LD*	5	9
	225	LD>	DLD>	-	Contact form compare LD*	5	9
	226	LD<	DLD<	-	Contact form compare LD*	5	9
	228	LD<>	DLD<>	-	Contact form compare LD*	5	9
	229	LD<=	DLD<=	-	Contact form compare LD*	5	9
	230	LD>=	DLD>=	-	Contact form compare LD*	5	9
	232	AND=	DAND=	-	Contact form compare AND*	5	9
	233	AND>	DAND>	-	Contact form compare AND*	5	9
	234	AND<	DAND<	-	Contact form compare AND*	5	9
	236	AND<>	DAND<>	-	Contact form compare AND*	5	9
	237	AND<=	DAND<=	-	Contact form compare AND*	5	9
	238	AND>=	DAND>=	-	Contact form compare AND*	5	9
	240	OR=	DOR=	-	Contact form compare OR*	5	9
	241	OR>	DOR>	-	Contact form compare OR*	5	9
	242	OR<	DOR<	-	Contact form compare OR*	5	9
	244	OR<>	DOR<>	-	Contact form compare OR*	5	9
	245	OR<=	DOR<=	-	Contact form compare OR*	5	9
	246	OR>=	DOR>=	-	Contact form compare OR*	5	9
Floating Point Contact Form	275	-	FLD=	-	Floating point number contact form compare LD*	-	9
	276	-	FLD>	-	Floating point number contact form compare LD*	-	9
	277	-	FLD<	-	Floating point number contact form compare LD*	-	9

Classification	API	Command Code		P Command	Function	STEPS	
		16 bit	32 bit			16 bit	32 bit
Comparison Command	278	-	FLD<>	-	Floating point number contact form compare LD*	-	9
	279	-	FLD<=	-	Floating point number contact form compare LD*	-	9
	280	-	FLD>=	-	Floating point number contact form compare LD*	-	9
	281	-	FAND=	-	Floating point number contact form compare AND*	-	9
	282	-	FAND>	-	Floating point number contact form compare AND*	-	9
	283	-	FAND<	-	Floating point number contact form compare AND*	-	9
	284	-	FAND<>	-	Floating point number contact form compare AND*	-	9
	285	-	FAND<=	-	Floating point number contact form compare AND*	-	9
	286	-	FAND>=	-	Floating point number contact form compare AND*	-	9
	287	-	FOR=	-	Floating point number contact form compare OR*	-	9
	288	-	FOR>	-	Floating point number contact form compare OR*	-	9
	289	-	FOR<	-	Floating point number contact form compare OR*	-	9
	290	-	FOR<>	-	Floating point number contact form compare OR*	-	9
	291	-	FOR<=	-	Floating point number contact form compare OR*	-	9
	292	-	FOR>=	-	Floating point number contact form compare OR*	-	9
Drive Special Command	139	RPR	–	✓	Read servo parameter	5	–
	140	WPR	–	✓	Write servo parameter	5	–
	141	FPID	–	✓	Drive PID control mode	9	–
	142	FREQ	–	✓	Drive operation control mode (Frequency command)	7	–
	263	TORQ	–	✓	Set target torque	5	-

Table 16-24

16-6-4 Detailed explanation of application commands

API 01		CALL	P	S	Call a subprogram

bit device			Word device							
X	Y	M	K	H	KnX	KnY	KnM	T	C	D

Notes on operand usage:
The S operand can designate P.
MS300 series device: The S operand can designate P0-P63.

16-bit command (3 STEP)			
CALL	Continuous execution type	CALLP	Pulse execution type

32-bit command			
-	-	-	-

Flag signal: none

Explanation

- **S**: Call subprogram pointer.
- Write the subprogram after the FEND command.
- The subprogram must end after the SRET command.
- Refer to the FEND command explanation and sample content for detailed command functions.

API 02		SRET	P	–	End a subprogram

bit device			Word device							
X	Y	M	K	H	KnX	KnY	KnM	T	C	D

Notes on operand usage:
No operand
A contact-driven command is not needed.

16-bit command (1 STEP)			
FEND	Continuous execution type	-	-

32-bit command			
-	-	-	-

Flag signal: none

Explanation

- A contact-driven command is not needed. Automatically returns next command after CALL command.
- Indicates end of subprogram. After end of subprogram, SRET returns to main program, and executes next command after the original call subprogram CALL command.
- Refer to the FEND command explanation and sample content for detailed command functions.

API 06	FEND	–	End of a main program

	bit device			Word device							
	X	Y	M	K	H	KnX	KnY	KnM	T	C	D

Notes on operand usage:
No operand
A contact-driven command is not needed.

16-bit command (1 STEP)			
FEND	Continuous execution type	-	-

32-bit command			
-	-	-	-

Flag signal: none

Explanation

- This command indicates the end of the main program. It is the same as the END command when the PLC executes this command.
- The CALL command program must be written after the FEND command, and the SRET command is added to the end of the subprogram.
- When using the FEND command, an END command is also needed. However, the END command must be placed at the end, after the main program and subprogram.

CALL command process

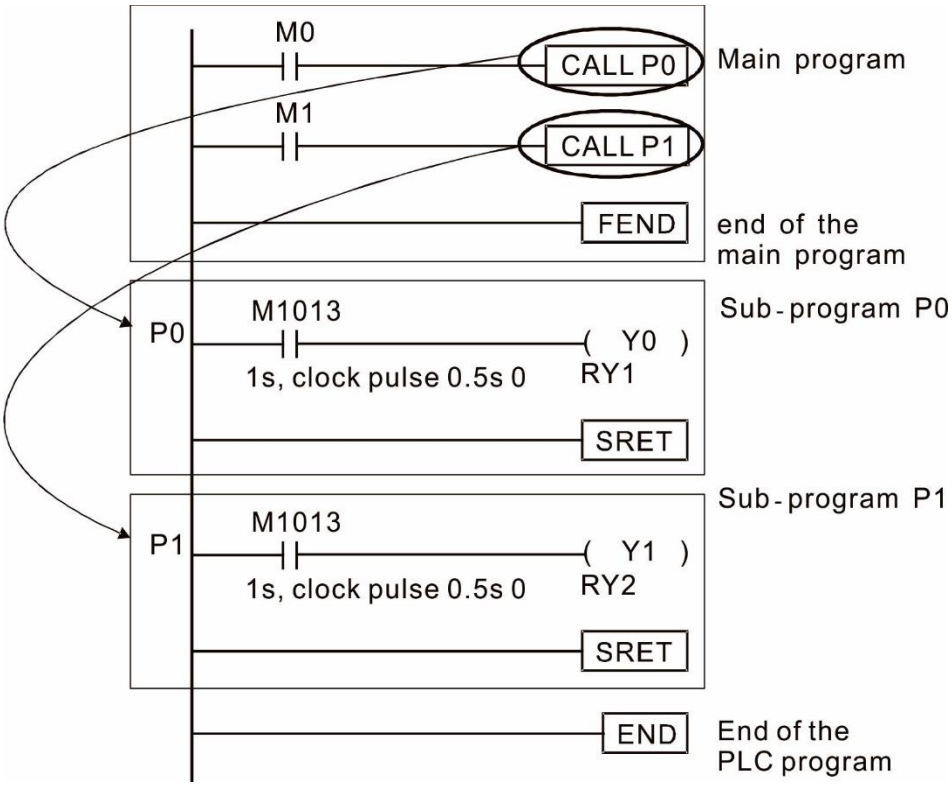

API 10	D	CMP	P	(S1) (S2) (D)	Compare set output

	bit device			Word device							
	X	Y	M	K	H	KnX	KnY	KnM	T	C	D
S1				*	*	*	*	*	*	*	*
S2				*	*	*	*	*	*	*	*
D		*	*								

Notes on operand usage:
The operand D occupies three consecutive points

16-bit command (7 STEP)			
CMP	Continuous execution type	CMPP	Pulse execution type

32-bit command (13 STEP)			
DCMP	Continuous execution type	DCMPP	Pulse execution type

Flag signal: none

Explanation

- **S1**: Compare value 1. **S2**: Compare value 2. **D**: Results of comparison.
- Compares the size of the content of operand **S1** and **S2**; stores the results of the comparison in **D**.
- Size comparison is performed algebraically. All data is compared in the form of numerical binary values. Because this is a 16-bit command, when b15 is 1, this indicates a negative number.

Example

- When the designated device is Y0, it automatically occupies Y0, Y1 and Y2.
- When X10 = ON, the CMP command executes, and Y0, Y1 or Y2 is ON. When X10 = OFF, the CMP command does not execute, and the state of Y0, Y1 and Y2 remain in the state prior to X10 = OFF.
- For ≥, ≤, or ≠ comparison results, use series and parallel connections among Y0–Y2.

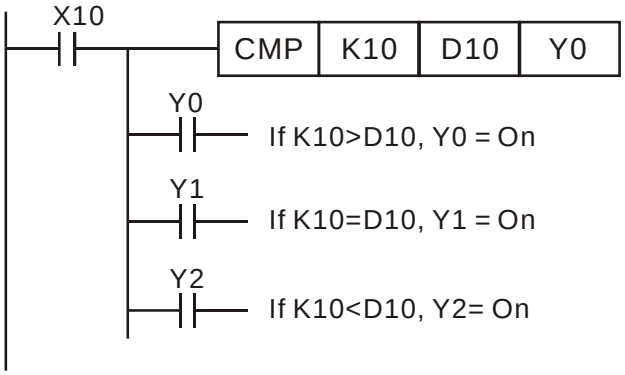

- To clear results of comparison, use the RST or ZRST command.

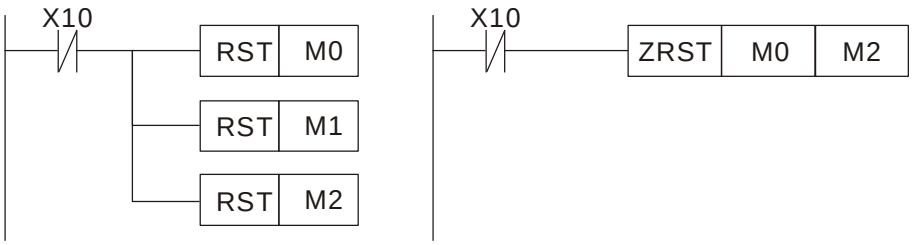

API 11	D	ZCP	P	(S1) (S2) (S) (D)	Range comparison

	bit device			Word device							
	X	Y	M	K	H	KnX	KnY	KnM	T	C	D
S1				*	*	*	*	*	*	*	*
S2				*	*	*	*	*	*	*	*
S				*	*	*	*	*	*	*	*
D		*	*								

Notes on operand usage:
The content value of operand S1 is less than the content value of S2 operand.
The operand D occupies three consecutive points.

16-bit command (9 STEP)

ZCP	Continuous execution type	ZCPP	Pulse execution type

32-bit command (17 STEP)

DZCP	Continuous execution type	DZCPP	Pulse execution type

Flag signal: none

Explanation

- **S1**: Lower limit of range comparison. **S2**: Upper limit of range comparison. **S**: Comparative value. **D**: Results of comparison.
- Compares value **S** with the lower limit **S1** and upper limit **S2**, and stores the results of comparison in **D**.
- When lower limit **S1** > upper limit **S2**, the command uses the lower limit **S1** as the upper and lower limit.
- Size comparison is performed algebraically. All data is compared in the form of numerical binary values. Because this is a 16-bit command, when b15 is 1, this indicates a negative number.

Example

- When the designated device is M0, it automatically occupies M0, M1 and M2.
- When X0 = ON, the ZCP command executes, and M0, M1 or M2 is ON. When X0 = OFF, the ZCP command does not execute, and the state of M0, M1 or M2 remains in the state prior to X0 = OFF.
- For ≥, ≤, or ≠ comparison results, use series and parallel connections for M0–M2.

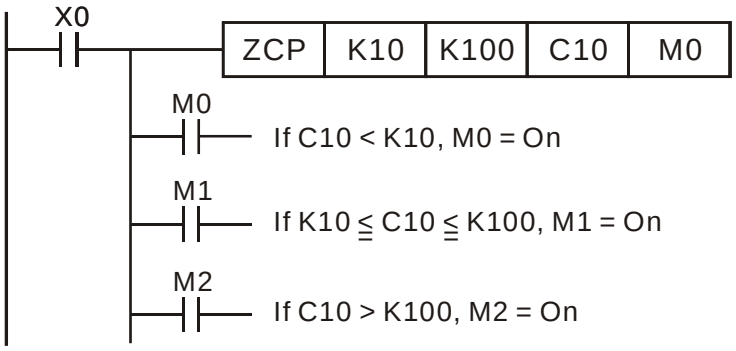

- To clear results of comparison, use the RST or ZRST command.

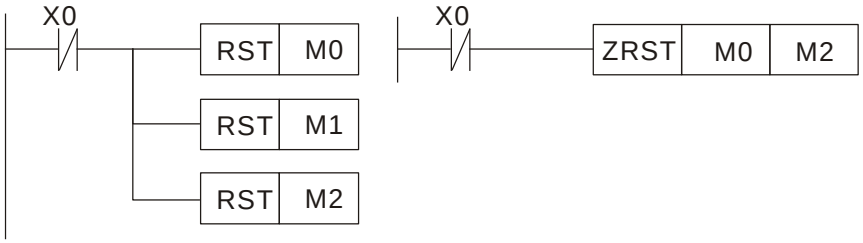

API 12	D	MOV	P	S D	Move data

	bit device			Word device							
	X	Y	M	K	H	KnX	KnY	KnM	T	C	D
S				*	*	*	*	*	*	*	*
D							*	*	*	*	*

Notes on operand usage: none

16-bit command (5 STEP)

MOV	Continuous execution type	MOVP	Pulse execution type

32-bit command (9 STEP)

DMOV	Continuous execution type	DMOVP	Pulse execution type

Flag signal: none

Explanation

- **S**: Data source. **D**: Destination of data movement.
- Moves the content in **S** to **D**. When the command does not execute, the content of **D** does not change.

Example

- When X0 = OFF, the content of D10 does not change; if X0 = ON, the value K10 is moved to data register D10.
- When X1 = OFF, the content of D10 does not change; if X1 = ON, the current value of T0 is moved to data register D10.

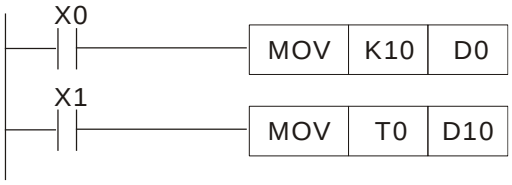

API 15	BMOV P	S D n	Send all

	bit device			Word device							
	X	Y	M	K	H	KnX	KnY	KnM	T	C	D
S						*	*	*	*	*	*
D							*	*	*	*	*
n				*	*				*	*	

Notes on operand usage:
n operand scope n ＝ 1 to 512

16-bit command (7 STEP)			
BMOV	Continuous execution type	BMOVP	Pulse execution type

32-bit command			
-	-	-	-

Flag signal: none

Explanation

- **S**: Initiate source device. **D**: Initiate destination device. **n**: Send block length.
- Sends the content of n registers starting from the initial number of the device designated by **S** to the n registers starting from the initial number of the device designated by **n**; if the number of points referred to by n exceeds the range used by that device, sends only points within the valid range.

Example 1

- When X10 = ON, sends the content of registers D0–D3 to the four registers D20–D23.

Example 2

- When sending from designated bit devices KnX, KnY, and KnM, **S** and **D** must have the same number of nibbles, which means n must be identical for source and destination.

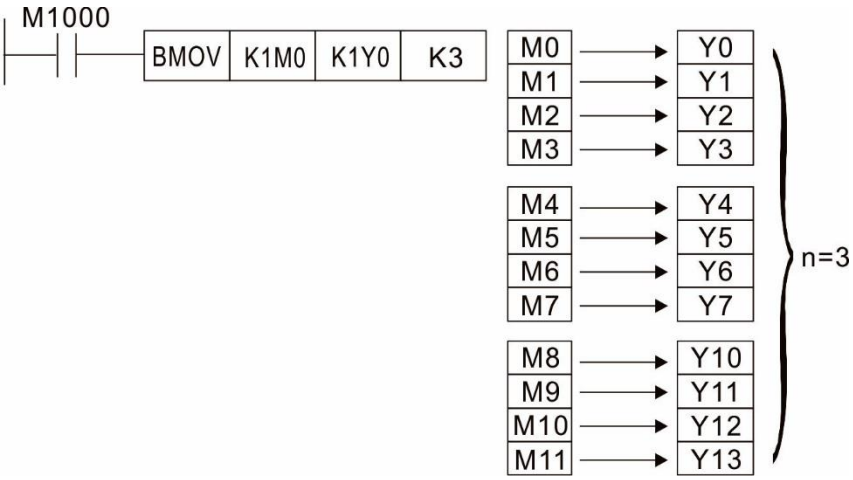

API 20	D	ADD	P	(S1) (S2) (D)	BIN addition

	bit device			Word device							
	X	Y	M	K	H	KnX	KnY	KnM	T	C	D
S1				*	*	*	*	*	*	*	*
S2				*	*	*	*	*	*	*	*
D							*	*	*	*	*

Notes on operand usage: none

16-bit command (7 STEP)

ADD	Continuous execution type	ADDP	Pulse execution type

32-bit command (13 STEP)

DADD	Continuous execution type	DADDP	Pulse execution type

Flag signal: M1020 Zero flag
M1021 Borrow flag
M1022 Carry flag
Refer to the following supplementary explanation

Explanation

- **S1**: Augend. **S2**: Addend. **D**: Sum.
- Adds **S1** and **S2** using the BIN method and stores result in **D**.
- The highest bit of any data defines the sign: bit = 0 indicates (positive) bit = 1 indicates (negative); enables the use of algebraic addition operations (for instance, 3 + (-9) = -6).
- Flag changes connected with the addition.

16-bit commend:

279. When calculation results are 0, the zero flag M1020 is ON.
280. When calculation results are less than -32,768, the borrow flag M1021 is ON.
281. When calculation results are greater than 32,767, the carry flag M1022 is ON.

32-bit commend:

282. When calculation results are 0, the zero flag M1020 is ON.
283. When calculation results are less than -2,147,483,648, the borrow flag M1021 is ON.
284. When calculation results are greater than 2,147,483,6477, the carry flag M1022 is ON.

Example

- 16-bit BIN addition: When X0 = ON, saves the result of the content of addend D0 plus the content of augend D10 in the content of D20.

Remark

- Relationship between flag actions and negative/positive numbers:

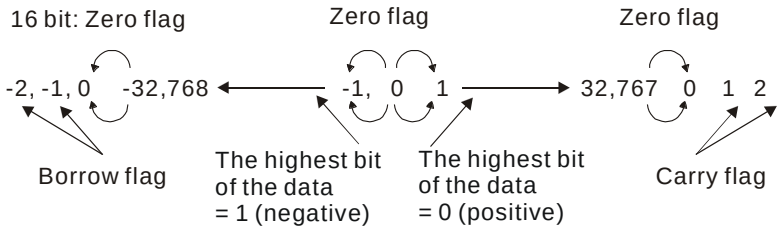

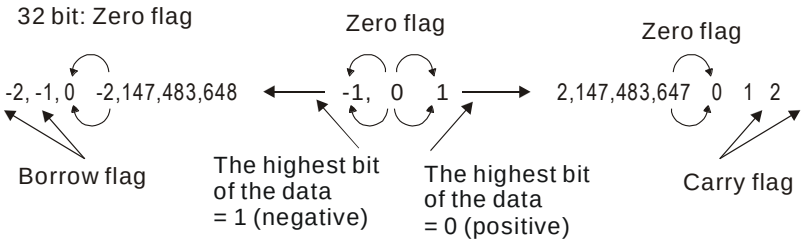

API 21	D	SUB	P	(S1) (S2) (D)	BIN subtraction

	bit device			Word device							
	X	Y	M	K	H	KnX	KnY	KnM	T	C	D
S1				*	*	*	*	*	*	*	*
S2				*	*	*	*	*	*	*	*
D							*	*	*	*	*

Notes on operand usage: none

16-bit command (7 STEP)

SUB	Continuous execution type	SUBP	Pulse execution type

32-bit command (13 STEP)

DSUB	Continuous execution type	DSUBP	Pulse execution type

Flag signal: M1020 Zero flag
M1021 Borrow flag
M1022 Carry flag
Refer to the following supplementary explanation

Explanation

- **S1**: Minuend. **S2**: Subtrahend. **D**: Difference.
- Subtracts **S2** from **S1** using the BIN method and stores result in **D**.
- The highest bit of any data defines the sign bit = 0 indicates (positive) bit = 1 indicates (negative); enables the use of algebraic subtraction operations.
- Flag changes connected with subtraction.

16-bit commend:

285. When calculation results are 0, the zero flag M1020 is ON.
286. When calculation results are less than -32,768, the borrow flag M1021 is ON.
287. When calculation results are greater than 32,767, the carry flag M1022 is ON.

32-bit commend:

288. When calculation results are 0, the zero flag M1020 is ON.
289. When calculation results are less than -2,147,483,648, the borrow flag M1021 is ON.
290. When calculation results are greater than 2,147,483,6477, the carry flag M1022 is ON.

Example

- 16-bit BIN subtraction: When X0 = ON, subtracts the content of D10 from the content of D0, and stores the difference in D20.

API 22	D	MUL	P	(S1) (S2) (D)	BIN multiplication

	bit device			Word device							
	X	Y	M	K	H	KnX	KnY	KnM	T	C	D
S1				*	*	*	*	*	*	*	*
S2				*	*	*	*	*	*	*	*
D							*	*	*	*	*

Notes on operand usage:
The 16-bit command operand D occupies two consecutive points.

16-bit command (7 STEP)

MUL	Continuous execution type	MULP	Pulse execution type

32-bit command (13 STEP)

DMUL	Continuous execution type	DMULP	Pulse execution type

Flag signal: none

Explanation

- **S1**: Multiplicand. **S2**: Multiplier. **D**: Product.
- Multiplies **S1** and **S2** using the BIN method, and stores the product in **D**.

16-bit BIN multiplication operation:

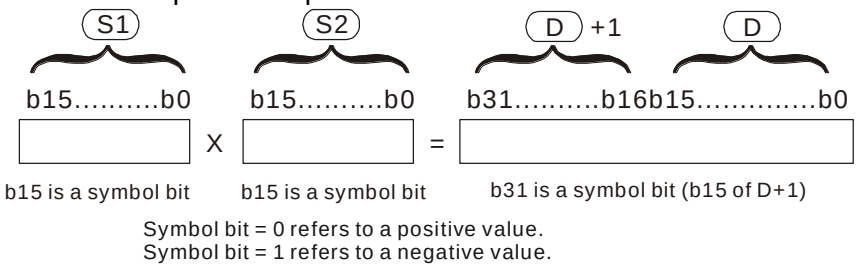

Symbol bit = 0 refers to a positive value.
Symbol bit = 1 refers to a negative value.

When **D** is a bit device, K1–K4 can be designated as a hexadecimal number, which occupies two consecutive units.

Example

- When 16-bit DO is multiplied by 16-bit D10, the result is a 32-bit product; the upper 16 bits are stored in D21, and the lower 16 bits are stored in D20. The bit at the farthest left indicates the sign of the result.

API 23	D	DIV	P	S1 S2 D	BIN division

	bit device			Word device							
	X	Y	M	K	H	KnX	KnY	KnM	T	C	D
S1				*	*	*	*	*	*	*	*
S2				*	*	*	*	*	*	*	*
D							*	*	*	*	*

Notes on operand usage:
The 16-bit command operand D occupies two consecutive points.

16-bit command (7 STEP)			
DIV	Continuous execution type	DIVP	Pulse execution type

32-bit command (13 STEP)			
DDIV	Continuous execution type	DDIVP	Pulse execution type

Flag signal: none

Explanation

- **S1**: Dividend. **S2**: Divisor. **D**: Quotient and remainder.
- Divides **S1** by **S2** and stores the quotient and remainder in **D** using the BIN method. The sign bit for **S1**, **S2**and **D** must be kept in mind when performing a 16-bit operation.

16-bit BIN division:

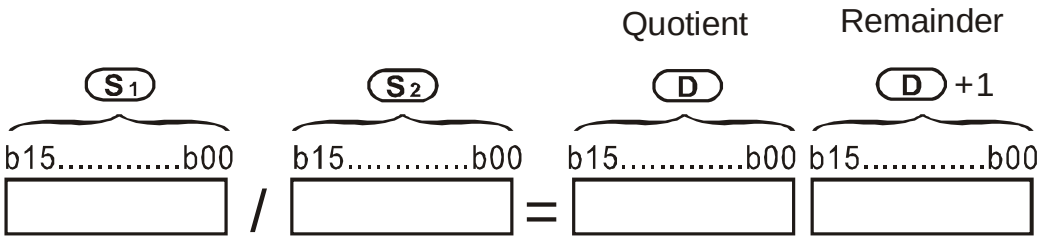

If **D** is a bit device, K1–K4 can be designated as 16 bits, which occupy two consecutive units and yield the quotient and remainder.

Example

- When X0 = ON, stores the quotient resulting from division of dividend D0 by divisor D10 in D20, and the remainder in D21. The highest bit indicates the sign of the result.

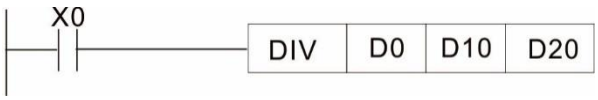

API 24	D	INC	P	D	BIN add one

	bit device			Word device							
	X	Y	M	K	H	KnX	KnY	KnM	T	C	D
D							*	*	*	*	*

Notes on operand usage: none

16-bit command (3 STEP)

INC	Continuous execution type	INCP	Pulse execution type

32-bit command (5 STEP)

DINC	Continuous execution type	DINCP	Pulse execution type

Flag signal: none

Explanation

- **D**: Destination device.
- If a command is not the pulse execution type, adds 1 to the content of device D during each scanning cycle.
- Generally use this command as a pulse execution type command (INCP).
- During 16-bit operation, 32,767 +1 rolls over to -32,768. During 32-bit operation, 2,147,483,647 +1 rolls over to -2,147,483,648.

Example

- When X0 switches from OFF to ON, it automatically adds 1 to the content of D0.

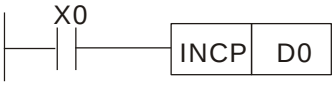

API 25	D	DEC	P	D	BIN subtract one

	bit device			Word device							
	X	Y	M	K	H	KnX	KnY	KnM	T	C	D
D				*	*	*	*	*			

Notes on operand usage: none

16-bit command (3 STEP)

DEC	Continuous execution type	DECP	Pulse execution type

32-bit command (5 STEP)

DDEC	Continuous execution type	DDECP	Pulse execution type

Flag signal: none

Explanation

- **D**: Destination device.
- If a command is not the pulse execution type, adds 1 to the content of device **D** during each scanning cycle.
- Generally use this command as a pulse execution type command (DECP).
- During 16-bit operation, -32,768 -1 rolls over to 32,767. During 32-bit operation, -2,147,483,648 -1 rolls over to 2,147,483,647.

Example

- When X0 switches OFF to ON, it automatically subtracts 1 from the content of D0.

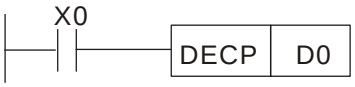

API 30	D	ROR	P	D n	Right rotation

	bit device			Word device							
	X	Y	M	K	H	KnX	KnY	KnM	T	C	D
D							*	*	*	*	*
n				*	*						

Notes on operand usage:
K4 (16-bit) is only valid if the operand D is designated as KnY or KnM.
n operand n=K1-K16 (16-bit)

16-bit command (5 STEP)

ROR	Continuous execution type	RORP	Pulse execution type

32-bit command (9 STEP)

DROR	Continuous execution type	DRORP	Pulse execution type

Flag signal: M1022 Carry flag

Explanation

- **D**: Device to be rotated. **n**: Number of bits for one rotation.
- Rotates the device designated by **D** to the right **n** bits.
- Generally use this command as a pulse execution type command (RORP).

Example

- When X0 switches OFF to ON, 4 of the 16 bits in D10 specify a right rotation; the content of the bit indicated with * (see diagram below) is sent to the carry flag signal M1022.

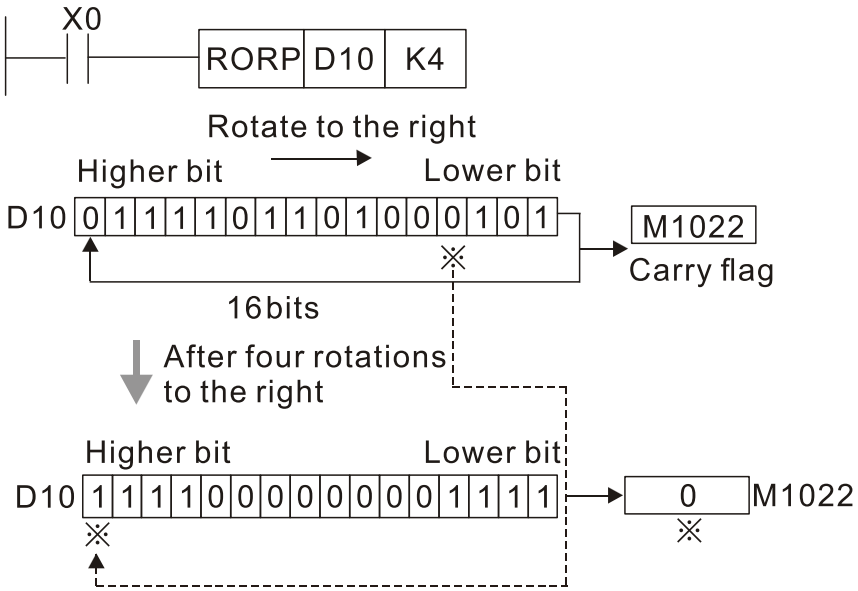

API 31	D	ROL	P	D n	Left rotation

	bit device			Word device							
	X	Y	M	K	H	KnX	KnY	KnM	T	C	D
D							*	*	*	*	*
n				*	*						

Notes on operand usage:
K4 (16-bit) is only valid if the operand D is designated as KnY or KnM.
n operand n=1 to 16 (16-bit)

16-bit command (5 STEP)			
ROL	Continuous execution type	ROLP	Pulse execution type

32-bit command (9 STEP)			
DROL	Continuous execution type	DROLP	Pulse execution type

Flag signal: M1022 Carry flag

Explanation

- **D**: Device to be rotated. **n**: Number of bits for one rotation.
- Rotates the device designated by **D** to the left **n** bits.
- Generally use this command as a pulse execution type command (ROLP).

Example

- When X0 switches OFF to ON, 4 of the 16 bits in D10 specify a left rotation; the content of the bit indicated with * (see diagram below) is sent to the carry flag signal M1022.

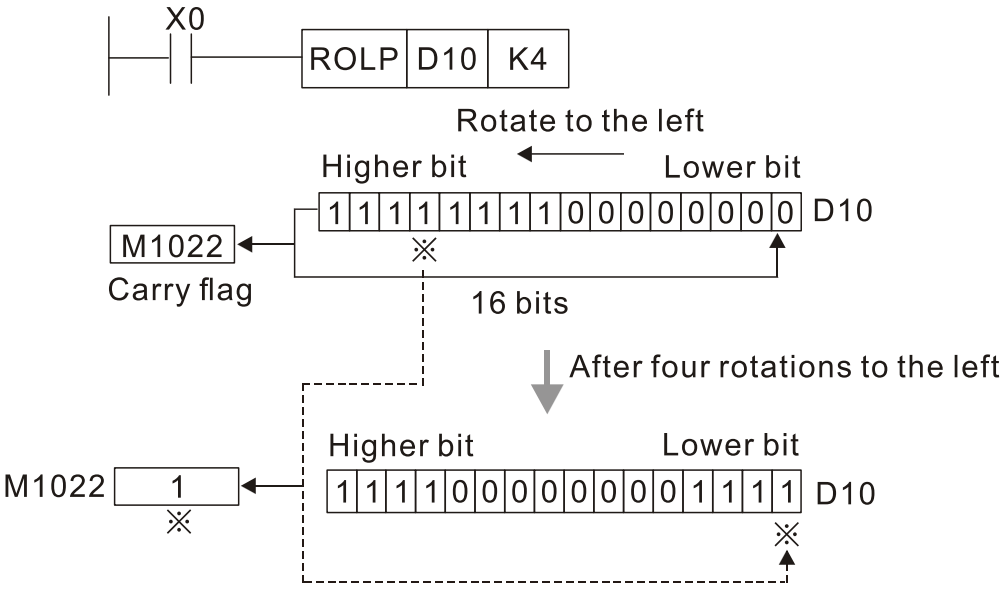

API 40	ZRST	P	(D1) (D2)	Clear range

	bit device			Word device							
	X	Y	M	K	H	KnX	KnY	KnM	T	C	D
D1		*	*						*	*	*
D2		*	*						*	*	*

Notes on operand usage:
Number of operand D_1 operand ≤ number of operand D_2.
Operands D_1, D_2 must designate the same type of device. Refer to the function specifications table for each device in series for the scope of device usage.

16-bit command (5 STEP)			
ZRST	Continuous execution type	ZRSTP	Pulse execution type

32-bit command			
-	-	-	-

Flag signal: none

Explanation

- **D1**: Clear range's initial device. **D2**: Clear range's final device.
- When the number of operand **D1** > number of operand **D2**, only the operand designated by **D2** is cleared.

Example

- When X0 is ON, clears auxiliary relays M300–M399, changes them to OFF.
- When X1 is ON, 16-bit clears counters C0–C79 (writes 0, and clears and changes contact and coil to OFF).
- When X10 is ON, clears timer T0–T127 (writes 0, and clears and changes contact and coil to OFF).
- When X3 is ON, clears the data in data registers D0–D100 (sets to 0).

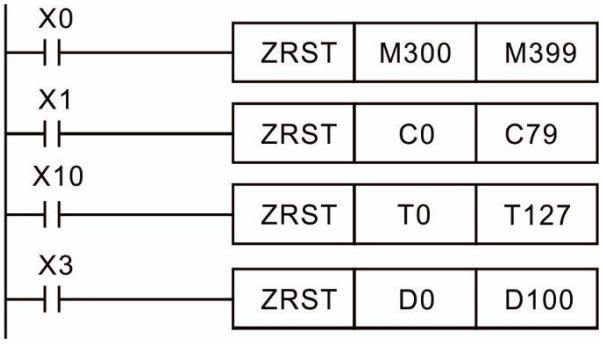

Remark

- Devices such as bit device Y, M and word device T, C, D can independently use the clear command (RST).

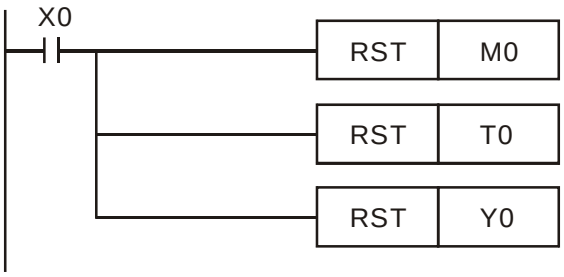

API 49	D	FLT	P	(S) (D)	Convert single-precision floating point number

	bit device			Word device							
	X	Y	M	K	H	KnX	KnY	KnM	T	C	D
S		*	*						*	*	*
D		*	*						*	*	*

Notes on operand usage:
Refer to the function specifications table for each device in series for the scope of device usage
The operand D occupies two consecutive points.

16-bit command

-	-	-	-

32-bit command (9 steps)

DFLT	Continuous execution type	DFLTP	Pulse execution type

Flag signal: none

Explanation

- **S**: Source device. **D**: Result device.
- Converts a BIN whole number into a binary decimal value.

Example

- When X11 is ON, converts the whole number corresponding to D0 and D1 into floating point numbers, and stores the result in D20 and D21.

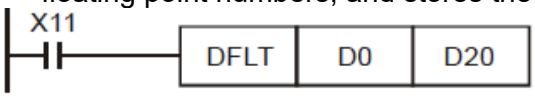

API 110	D	ECMP	P	S1 S2 D	Compare binary floating point numbers

	bit device			Word device							
	X	Y	M	K	H	KnX	KnY	KnM	T	C	D
S1				*	*						*
S2				*	*						*
D				*	*						*

Notes on operand usage:
The operand D occupies three consecutive points. Refer to the function specifications table for each device in series for the scope of device usage.

16-bit command			
-	-	-	-

32-bit command (13 STEP)			
DECMP	Continuous execution type	DECMPP	Pulse execution type

Flag signal: none

Explanation

- **S_1**: Binary floating point number 1. **S_2**: Binary floating point number 2. **D**: Results of comparison, occupies three consecutive points.
- Compares binary floating point number 1 with binary floating point number 2, and stores the result of comparison (>, =, <) in **D**.
- **If the source operand S_1** or **S_2** designates a constant K or H, the command converts the constant to a binary floating point number for the purpose of comparison.

Example

- When the designated device is M10, it automatically occupies M10-M12.
- When X0 = ON, the DECMP command executes, and one of M10–M12 is ON. When X0 = OFF, the DECMP command does not execute, and M10–M12 remains in the X0 = OFF state.
- For ≥, ≤, or ≠ comparison results, use series and parallel connections for M10–M12.
- Use the RST or ZRST command to clear the result.

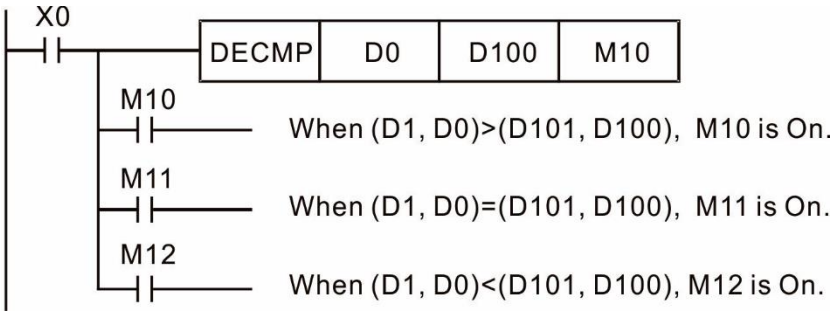

API 111	D	EZCP	P	S1 S2 S D	Compare binary floating point number range

	bit device			Word device							
	X	Y	M	K	H	KnX	KnY	KnM	T	C	D
S1				*	*						*
S2				*	*						*
S				*	*						*
D		*	*								

Notes on operand usage:
The operand D occupies three consecutive points.
Refer to the function specifications table for each device in series for the scope of device usage.

16-bit command

-	-	-	-

32-bit command (17 STEP)

DEZCP	Continuous execution type	DEZCPP	Pulse execution type

Flag signal: none

Explanation

- **S_1**: Lower limit of binary floating point number in range comparison. **S_2**: Upper limit for binary floating point number in range comparison. **S**: Comparison of binary floating point numerical values. **D**: Results of comparison, occupies three consecutive points.
- Compares binary floating point number **S** with the lower limit value **S_1** and the upper limit value **S_2**; stores the results of comparison in **D**.
- **If the source operand S_1** or **S_2** designates a constant K or H, the command converts the constant to a binary floating point number for the purpose of comparison.
- When the lower limit **S_1** is greater than the upper limit **S_2**, the command uses **S_1** as the lower and upper limit.

Example

- When the designated device is M0, it automatically occupies M0–M2.
- When X0 = ON, the DEZCP command executes, and one of M0–M2 is ON. When X0 = OFF, the EZCP command does not execute, and M0–M2 remains in the X0 = OFF state.
- Use the RST or ZRST command to clear the result.

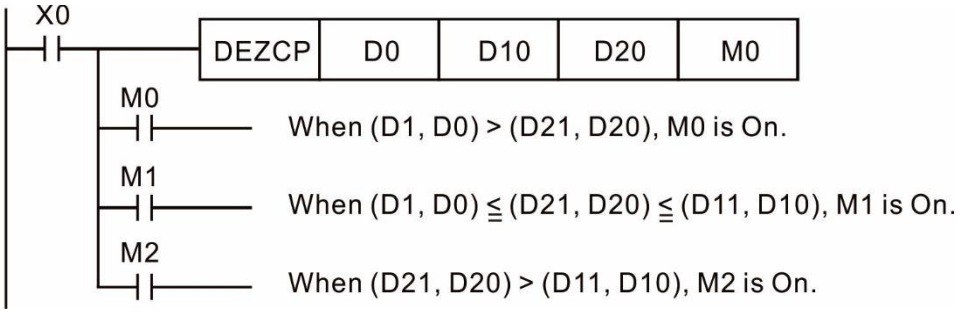

API 116	D	RAD	P	(S) (D)	Convert angle to diameter

	bit device			Word device							
	X	Y	M	K	H	KnX	KnY	KnM	T	C	D
S				*	*						*
D											*

Notes on operand usage:
Refer to the function specifications table for each device in series for the scope of device usage.

16-bit command

-	-	-	-

32-bit command (9 STEP)

DRAD	Continuous execution type	DRADP	Pulse execution type

Flag signal: none

Explanation

- **S**: data source (angle). **D**: result of conversion (diameter).
- Uses the following formula to convert angles to radians.
  Diameter = Angle × (π/180)

Example

- When X0 = ON, converts the angle of the designated binary floating point number (D1, D0) to radians and stores the result in (D11, D10); the result is a binary floating point number.

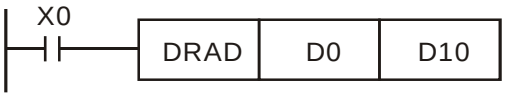

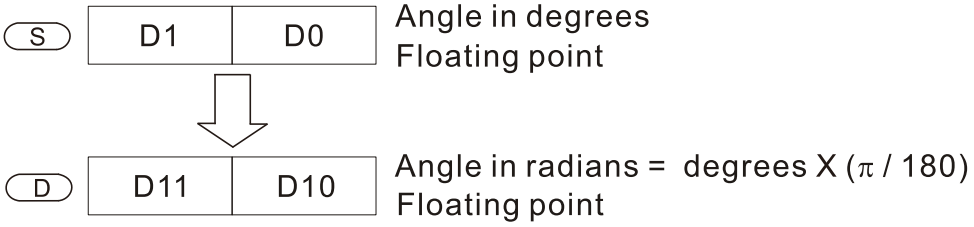

API 117	D	DEG	P	(S) (D)	Convert radian to angle

	bit device			Word device							
	X	Y	M	K	H	KnX	KnY	KnM	T	C	D
S				*	*						*
D											*

Notes on operand usage:
Refer to the function specifications table for each device in series for the scope of device usage.

16-bit command

-	-	-	-

32-bit command (9 STEP)

DDEG	Continuous execution type	DDEGP	Pulse execution type

Flag signal: none

Explanation

- **S**: data source (radian). **D**: results of conversion (angle).
- Uses the following formula to convert radians to an angle.
  Angle = Radian × (180/π)

Example

- When X0 = ON, angle of the designated binary floating point number (D1, D0) in radians is converted to an angle and stored in (D11, D10), with the content consisting of a binary floating point number.

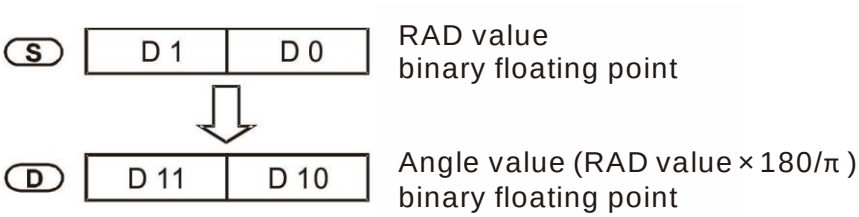

API 120	D	EADD	P	S1 S2 D	Add binary floating point numbers

	bit device			Word device							
	X	Y	M	K	H	KnX	KnY	KnM	T	C	D
S1				*	*						*
S2				*	*						*
D											*

Notes on operand usage:
Refer to the function specifications table for each device in series for the scope of device usage.

16-bit command

-	-	-	-

32-bit command (9 STEP)

DEADD	Continuous execution type	DEADDP	Pulse execution type

Flag signal: none

Explanation

- **S_1**: addend. **S_2**: augend. **D**: sum.
- Adds the content of the register designated by **S_2** to the content of the register designated by **S_1**, and stores the result in the register designated by **D**. Addition is performed entirely using binary floating point numbers.
- **If the source operand S_1** or **S_2** designates a constant K or H, the command converts that constant into a binary floating point number for use in addition.
- **In the situation when S_1** and **S_2** designate identical register numbers, if a "continuous execution" command is employed, when conditional contact is ON, the register performs addition once during each scan. You generally use Pulse execution type commands (DEADDP) under ordinary circumstances.

Example

- When X0 = ON, adds a binary floating point number (D1, D0) to a binary floating point number (D3, D2), and stores the results in (D11, D10).

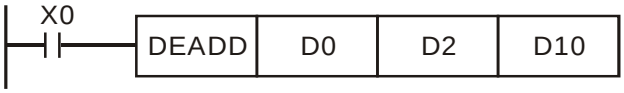

- When X2 = ON, adds a binary floating point number (D11, D10) to K1234 (which is automatically converted to a binary floating point number), and stores the results in (D21, D20).

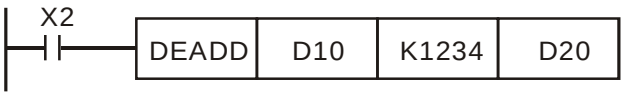

API 121	D	ESUB	P	(S1) (S2) (D)	Subtract binary floating point numbers

	bit device			Word device							
	X	Y	M	K	H	KnX	KnY	KnM	T	C	D
S1				*	*						*
S2				*	*						*
D											*

Notes on operand usage:
Refer to the function specifications table for each device in series for the scope of device usage.

16-bit command			
-	-	-	-

32-bit command (13 STEP)			
DESUB	Continuous execution type	DESUBP	Pulse execution type

Flag signal: none

Explanation

- **S_1**: minuend. **S_2**: subtrahend. **D**: difference.
- Subtracts the content of the register designated by **S_2** from the content of the register designated by **S_1**, and stores the difference in the register designated by **D**; subtraction is performed entirely using binary floating point numbers.
- **If the source operand S_1** or **S_2** designates a constant K or H, the command converts that constant into a binary floating point number for use in subtraction.
- **In the situation when S_1** and **S_2** designate identical register numbers, if a "continuous execution" command is employed, when conditional contact is ON, the register performs subtraction once during each scan. You generally use pulse execution type commands (DESUBP) under ordinary circumstances.

Example

- When X0 = ON, subtracts a binary floating point number (D1, D0) from a binary floating point number (D3, D2), and stores the results in (D11, D10).

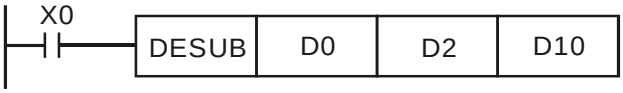

- When X2 = ON, subtracts the binary floating point number (D1, D0) from K1234 (which is automatically converted to a binary floating point number), and stores the results in (D11, D10).

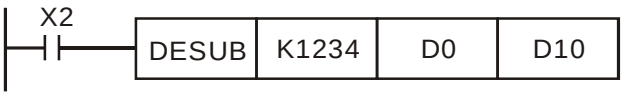

API 122	D	EMUL	P	S1 S2 D	Multiply binary floating point numbers

	bit device			Word device							
	X	Y	M	K	H	KnX	KnY	KnM	T	C	D
S1				*	*						*
S2				*	*						*
D											*

Notes on operand usage:
Refer to the function specifications table for each device in series for the scope of device usage.

16-bit command

-	-	-	-

32-bit command (13 STEP)

DEMUL	Continuous execution type	DEMULP	Pulse execution type

Flag signal: none

Explanation

- **S_1**: multiplicand. **S_2**: multiplier. **D**: product.
- Multiplies the content of the register designated by **S_1** by the content of the register designated by **S_2**, and stores the product in the register designated by **D**; multiplication is performed entirely using binary floating point numbers.
- **If the source operand S_1** or **S_2** designates a constant K or H, the command converts that constant into a binary floating point number for use in multiplication.
- **In the situation when S_1** and **S_2** designate identical register numbers, if you employ a "continuous execution" command, when conditional contact is ON, the register performs multiplication once during each scan. You generally use pulse execution type commands (DEMULP) under ordinary circumstances.

Example

- When X1 = ON, multiplies the binary floating point number (D1, D0) by the binary floating point number (D11, D10), and stores the product in the register designated by (D21, D20).

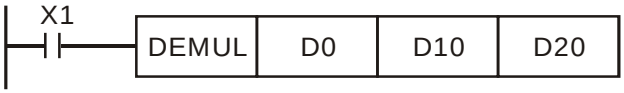

- When X2 = ON, multiplies the binary floating point number (D1, D0) by K1234 (which is automatically converted to a binary floating point number), and stores the results in (D11, D10).

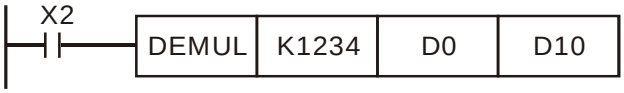

API 123	D	EDIV	P	S1 S2 D	Divide binary floating point numbers

	bit device			Word device							
	X	Y	M	K	H	KnX	KnY	KnM	T	C	D
S1				*	*						*
S2				*	*						*
D											*

Notes on operand usage:
Refer to the function specifications table for each device in series for the scope of device usage.

16-bit command

-	-	-	-

32-bit command (13 STEP)

DEDIV	Continuous execution type	DEDIVP	Pulse execution type

Flag signal: none

Explanation

- **S_1**: dividend. **S_2**: divisor. **D**: quotient.
- Divides the content of the register designated by **S_1** by the content of the register designated by **S_2** and stores the quotient in the register designated by **D**; division is performed entirely using binary floating point numbers.
- **If the source operand S_1** or **S_2** designates a constant K or H, the command converts that constant into a binary floating point number for use in division.

Example

- When X1 = ON, divides the binary floating point number (D1, D0) by the binary floating point number (D11, D10), and stores the quotient in the register designated by (D21, D20).

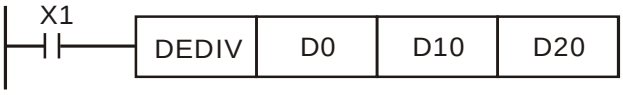

- When X2 = ON, divides the binary floating point number (D1, D0) by K1,234 (which is automatically converted to a binary floating point number), and stores the results in (D11, D10).

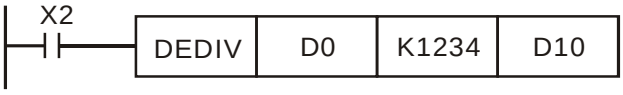

API 124	D	EXP	P	S D	Find the exponent of a binary floating point number

	bit device			Word device							
	X	Y	M	K	H	KnX	KnY	KnM	T	C	D
S				*	*						*
D											*

Notes on operand usage:
Refer to the function specifications table for each device in series for the scope of device usage.

16-bit command			
-	-	-	-

32-bit command (9 STEP)			
DEXP	Continuous execution type	DEXPP	Pulse execution type

Flag signal: none

Explanation

- **S**: operation source device. **D**: operation results device.
- Taking e =2.71828 as a base, **S** is the exponent in the EXP operation.
- [**D** +1, **D**]=EXP[**S +1, S**]
- Valid regardless of whether the content of **S** has a positive or negative value. The designated register D must have a 32-bit data format. Performs the operation using floating point numbers, and converts **S** to a floating point number.
- Content of operand **D** = e^{S}; e = 2.71828, **S** is the designated source data.

Example

- When M0 is ON, converts the value of (D1, D0) to a binary floating point number, and stores the result in register (D11, D10).
- When M1 is ON, performs the EXP operation on the exponent of (D11, D10), converts the result to a binary floating point number and stores it in register (D21, D20).

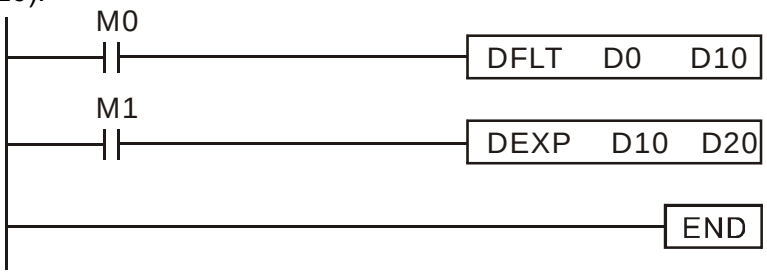

API 125	D	LN	P	S D	Find the natural logarithm of a binary floating point

	bit device			Word device							
	X	Y	M	K	H	KnX	KnY	KnM	T	C	D
S				*	*						*
D											*

Notes on operand usage:
Refer to the function specifications table for each device in series for the scope of device usage.

16-bit command

-	-	-	-

32-bit command (9 STEP)

DLN	Continuous execution type	DLNP	Pulse execution type

Flag signal: none

Explanation

- **S**: operation source device. **D**: operation results device.
- Taking e =2.71828 as a base, **S** is the exponent in the EXP operation.
- [**D** +1, **D**]=EXP [**S +1, S**]
- Valid regardless of whether the content of **S** has a positive or negative value. The designated register D must have a 32-bit data format. Performs the operation using floating point numbers and converts **S** to a floating point number.
- Content of operand **D** = e^{S}; e = 2.71828, **S** is the designated source data

Example

- When M0 is ON, converts the value of (D1, D0) to a binary floating point number, and stores the result in register (D11, D10).
- When M1 is ON, performs the EXP operation on the exponent of (D11, D10); converts the result to a binary floating point number stores it in register (D21, D20).

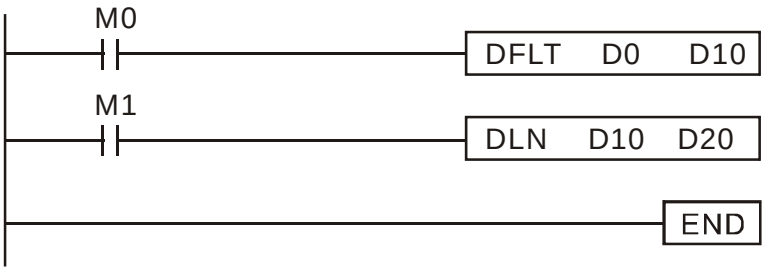

API 127	D	ESQR	P	S D	Find the square root of a binary floating point number

	bit device			Word device							
	X	Y	M	K	H	KnX	KnY	KnM	T	C	D
S				*	*						*
D											*

Notes on operand usage:
Refer to the function specifications table for each device in series for the scope of device usage.

16-bit command

-	-	-	-

32-bit command (9 STEP)

DESQR	Continuous execution type	DESQR P	Pulse execution type

Flag signal: none

Explanation

- **S**: source device for which square root is desired **D**: result of finding square root.
- Finds the square root of the content of the register designated by **S**, stores the result in the register designated by **D**. Square roots are performed entirely using binary floating point numbers.
- If the source operand **S** refers to a constant K or H, the command converts that constant into a binary floating point number for use in the operation.
- When X0 = ON, finds the square root of the binary floating point number (D1, D0), and stores the result in the register designated by (D11, D10).

Example

$\sqrt{(D1, D0)} \rightarrow (D11, D10)$

Binary floating point → Binary floating point

- When X2 = ON, finds the square root of K1,234 (which has been automatically converted to a binary floating point number), and stores the results in (D11, D10).

API					
129	D	INT	P	S D	Single-precision floating point number → Convert binary floating point number to BIN whole number

	bit device			Word device							
	X	Y	M	K	H	KnX	KnY	KnM	T	C	D
S											*
D											*

Notes on operand usage:
Refer to the function specifications table for each device in series for the scope of device usage.

16-bit command

-	-	-	-

32-bit command (9 STEP)

DINT	Continuous execution type	DINTP	Pulse execution type

Flag signal: none

Explanation

- **S**: the source device to be converted. **D**: results of conversion.
- Converts the content of the register designated by **S** from a binary floating point number format to a BIN whole number, and stores the results in **D**. The BIN whole number floating point number is discarded.
- The action of this command is the opposite of that of command API 49 (FLT).
- When X0 = ON, converts the binary floating point number (D1, D0) into a BIN whole number, and stores the result in (D10); the BIN whole number floating point number is discarded.

Example

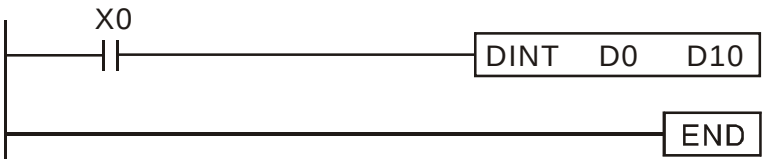

API 130	D	SIN	P	S D	Find the sine of a binary floating point number

	bit device			Word device							
	X	Y	M	K	H	KnX	KnY	KnM	T	C	D
S				*	*						*
D											*

Notes on operand usage:
Refer to the function specifications table for each device in series for the scope of device usage.

16-bit command			
-	-	-	-

32-bit command (9 STEP)			
DSIN	Continuous execution type	DSINP	Pulse execution type

Flag signal: none

Explanation

- **S**: the designated source value (diameter). **D**: the SIN value result.
- **S** is the designated source in radians.
- The value in radians (RAD) is equal to (angle × π/180).
- Finds the SIN from the source value designated by **S** and stores the result in **D**.

The following figure displays the relationship between the arc and SIN results:

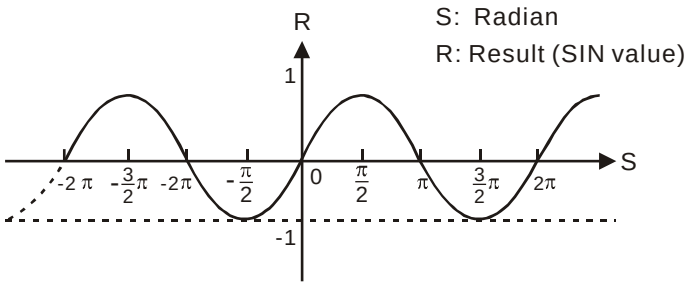

Example

- When X0 = ON, finds the SIN value of the designated binary floating point number (D1, D0) in radians (RAD) and stores the result in (D11, D10) as a binary floating point number.

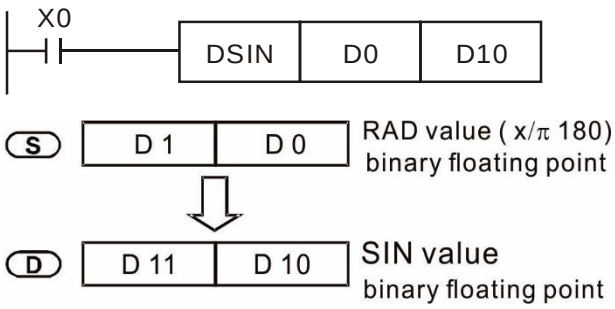

API 131	D	COS	P	(S) (D)	Find the cosine of a binary floating point number

	bit device			Word device							
	X	Y	M	K	H	KnX	KnY	KnM	T	C	D
S				*	*						*
D											*

Notes on operand usage:
Refer to the function specifications table for each device in series for the scope of device usage.

16-bit command

-	-	-	-

32-bit command (9 STEP)

DCOS	Continuous execution type	DCOSP	Pulse execution type

Flag signal: none

Explanation

- **S**: the designated source value (diameter). **D**: the COS value result.
- Finds the COS of the source value designated by **S** and stores it in **D**.

The following figure displays the relationship between the arc and COS results:

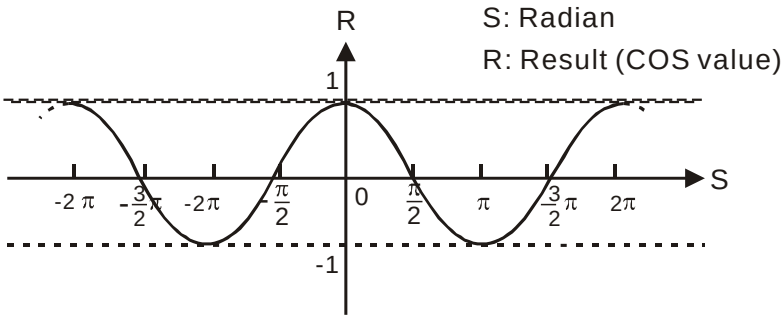

Example

- When X0 = ON, finds the COS value of the designated binary floating point number (D1, D0) in radians and stores the result in (D11, D10), as a binary floating point number.

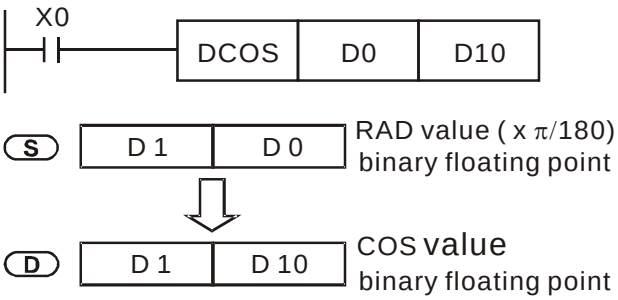

API 132	D	TAN	P	(S) (D)	Find the tangent of a binary floating point number

	bit device			Word device							
	X	Y	M	K	H	KnX	KnY	KnM	T	C	D
S				*	*						*
D											*

Notes on operand usage:
Refer to the function specifications table for each device in series for the scope of device usage.

16-bit command			
-	-	-	-

32-bit command (9 STEP)			
DTAN	Continuous execution type	DTANP	Pulse execution type

Flag signal: none

Explanation

- **S**: the designated source value (diameter). **D**: the TAN value result.
- Finds the TAN of the source value designated by **S** and stores it in **D**.

The following figure displays the relationship between the arc and TAN results:

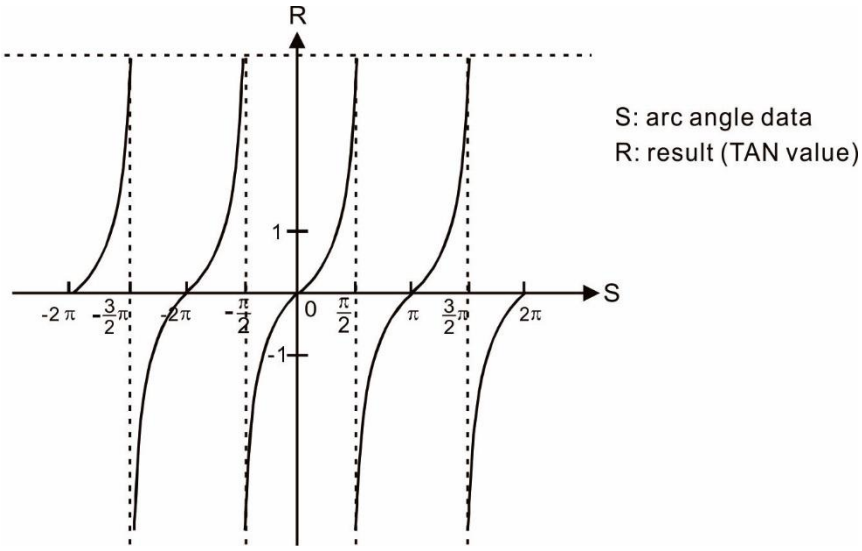

Example

- When X0 = ON, finds the TAN value of the designated binary floating point number (D1, D0) in radians (RAD) and stores it in (D11, D10), as a binary floating point number.

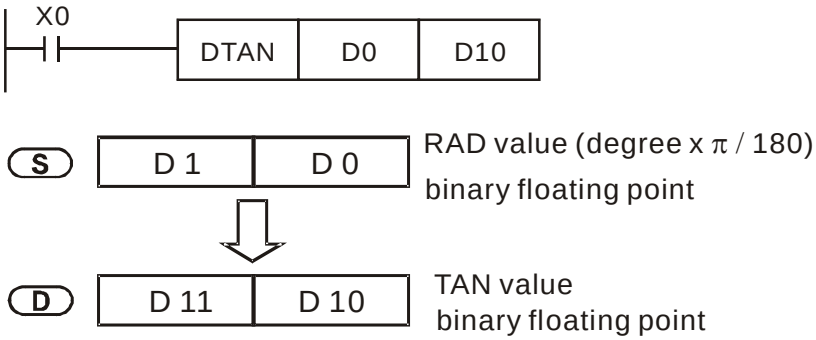

API 133	D	ASIN	P	(S) (D)	Find the arcsine of a binary floating point number

	bit device			Word device							
	X	Y	M	K	H	KnX	KnY	KnM	T	C	D
S				*	*						*
D											*

Notes on operand usage:
Refer to the function specifications table for each device in series for the scope of device usage.

16-bit command

-	-	-	-

32-bit command (9 STEP)

DASIN	Continuous execution type	DASINP	Pulse execution type

Flag signal: none

Explanation

- **S**: the designated source (binary floating point number). **D**: the ASIN value result.
- ASIN value =$\sin^{-1}$

The figure below shows the relationship between input data and result:

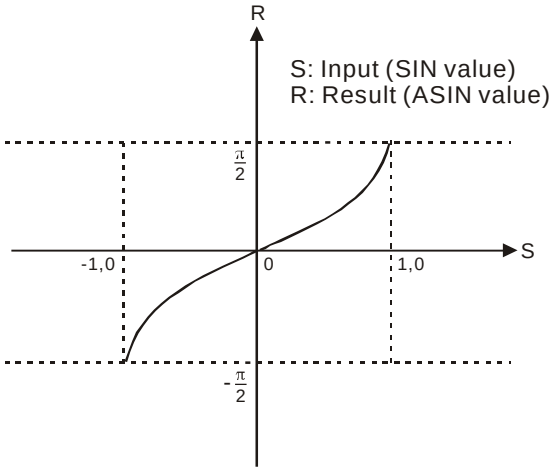

Example

- When X0 = ON, finds the ASIN value of the designated binary floating point number (D1, D0) and stores the result in (D11, D10), as a binary floating point number.

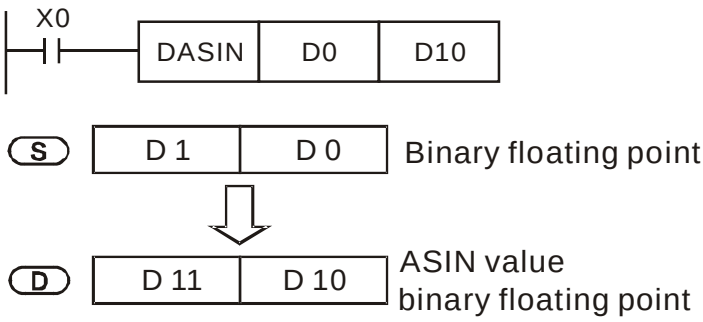

API 134	D	ACOS	P	(S) (D)	Find the arccosine of a binary floating point number

	bit device			Word device							
	X	Y	M	K	H	KnX	KnY	KnM	T	C	D
S				*	*						*
D											*

Notes on operand usage:
Refer to the function specifications table for each device in series for the scope of device usage.

16-bit command

-	-	-	-

32-bit command (9 STEP)

DACOS	Continuous execution type	DACOS P	Pulse execution type

Flag signal: none

Explanation

- **S**: the designated source (binary floating point number). **D**: the ACOS value result.
- ACOS value = $\cos^{-1}$

The figure below shows the relationship between input data and result:

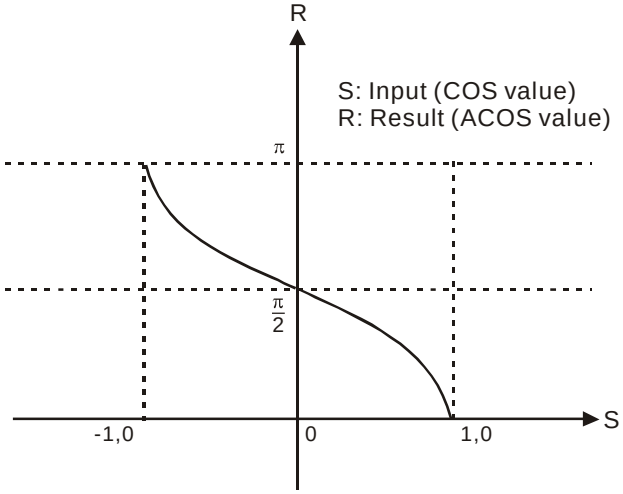

Example

- When X0 = ON, finds the ACOS value of the designated binary floating point number (D1, D0) and stores the result in (D11, D10), as a binary floating point number.

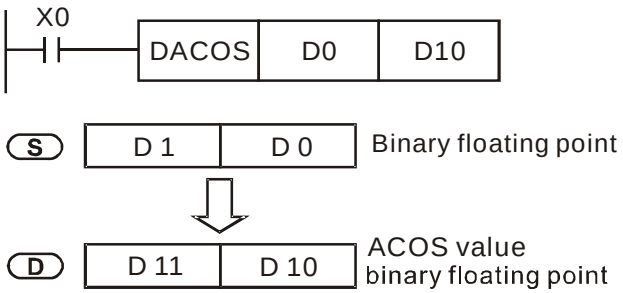

API 135	D	ATAN	P	(S) (D)	Find the arctangent of a binary floating point number

	bit device			Word device							
	X	Y	M	K	H	KnX	KnY	KnM	T	C	D
S				*	*						*
D											*

Notes on operand usage:
Refer to the function specifications table for each device in series for the scope of device usage.

16-bit command			
-	-	-	-

32-bit command (9 STEP)			
DATAN	Continuous execution type	DATANP	Pulse execution type

Flag signal: none

Explanation

- **S**: the designated source (binary floating point number). **D**: the ATAN value result.
- ATAN value = $\tan^{-1}$

The figure below shows the relationship between input data and result:

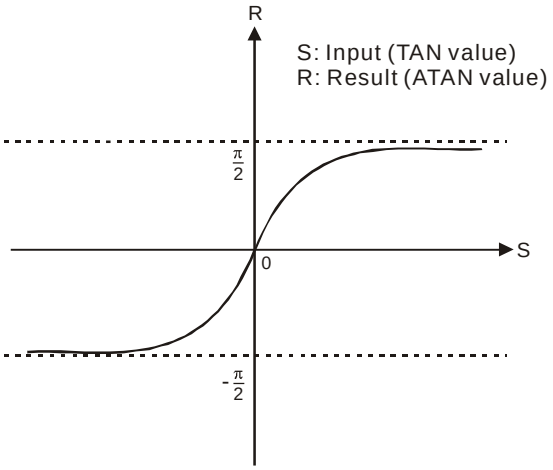

Example

- When X0 = ON, finds the ATAN value of the designated binary floating point number (D1, D0) and stores the result in (D11, D10), as a binary floating point number.

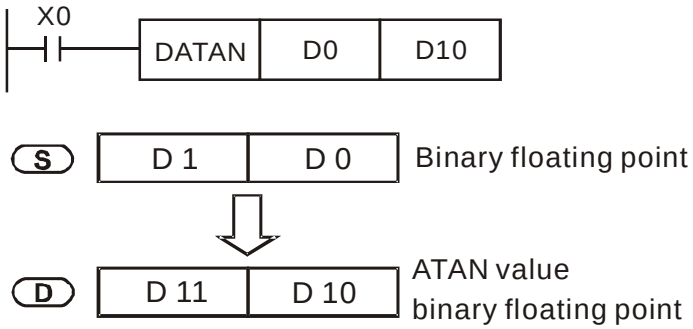

API 136	D	SINH	P	(S) (D)	Find the hyperbolic sine of at binary floating point number

	bit device			Word device							
	X	Y	M	K	H	KnX	KnY	KnM	T	C	D
S				*	*						*
D											*

Notes on operand usage:
Refer to the function specifications table for each device in series for the scope of device usage.

16-bit command

-	-	-	-

32-bit command (9 STEP)

DSINH	Continuous execution type	DSINHP	Pulse execution type

Flag signal: none

Explanation

- **S**: the designated source (binary floating point number). **D**: the SINH value result.
- SINH value = $(e^{s}-e^{-s}) \div 2$

Example

- When X0 = ON, finds the SINH value of the designated binary floating point number (D1, D0) and stores the result in (D11, D10), as a binary floating point number.

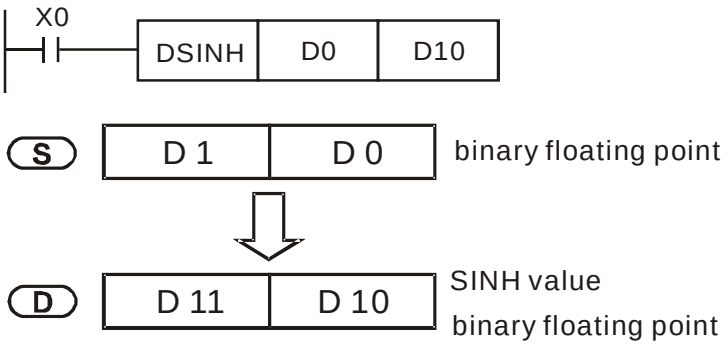

API 137	D	COSH	P	(S) (D)	Find the hyperbolic cosine of a binary floating point number

	bit device			Word device							
	X	Y	M	K	H	KnX	KnY	KnM	T	C	D
S				*	*						*
D											*

Notes on operand usage:
Refer to the function specifications table for each device in series for the scope of device usage.

16-bit command

-	-	-	-

32-bit command (9 STEP)

DCOSH	Continuous execution type	DCOSHP	Pulse execution type

Flag signal: none

Explanation

- **S**: the designated source (binary floating point number). **D**: the COSH value result.
- COSH value $=(e^{s}+e^{-s}) \div 2$

Example

- When X0 = ON, finds the COSH value of the designated binary floating point number (D1, D0) and stores the result in (D11, D10), as a binary floating point number.

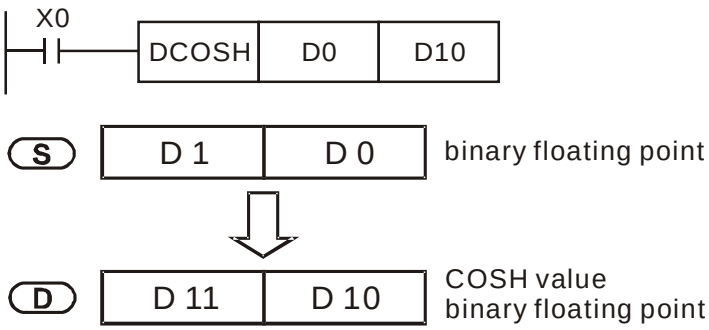

API 138	D	TANH	P	S D	Finds the hyperbolic tangent of a binary floating point number

	bit device			Word device							
	X	Y	M	K	H	KnX	KnY	KnM	T	C	D
S				*	*						*
D											*

Notes on operand usage:
Refer to the function specifications table for each device in series for the scope of device usage.

16-bit command

-	-	-	-

32-bit command (9 STEP)

DTANH	Continuous execution type	DTANHP	Pulse execution type

Flag signal: none

Explanation

- **S**: the designated source (binary floating point number). **D**: the TANH value result.
- TANH value = $(e^{s}-e^{-s}) \div (e^{s}+e^{-s})$

Example

- When X0 = ON, finds the TANH value of the designated binary floating point number (D1, D0) and stores the result in (D11, D10), as a binary floating point number.

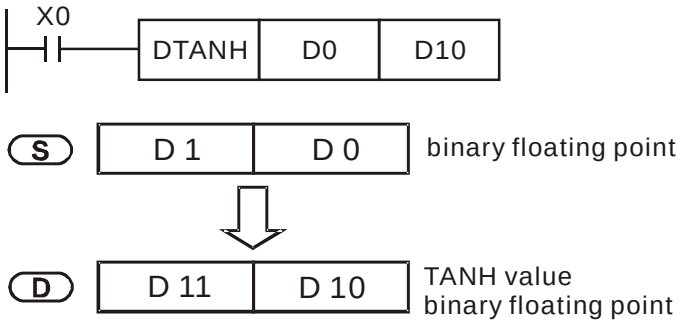

API 170	D	GRY	P	S D	Convert BIN to GRAY code

	bit device			Word device							
	X	Y	M	K	H	KnX	KnY	KnM	T	C	D
S				*	*	*	*	*	*	*	*
D							*	*	*	*	*

Notes on operand usage:
Refer to the function specifications table for each device in series for the scope of device usage.

16-bit command (5 STEP)

GRY	Continuous execution type	GRYP	Pulse execution type

32-bit command (9 STEP)

DGRY	Continuous execution type	DGRYP	Pulse execution type

Flag signal: none

Explanation

- **S**: source device. **D**: device storing GRAY code.
- Converts the BIN value of the device designated by **S** to a GRAY code, and stores the result in the device designated by **D**.
- The valid range for **S** is as shown below; if you exceed this range, it is an error, and the command does not execute.

  16-bit command: 0–32,767
  32-bit command: 0–2,147,483,647

- When X0 = ON, converts the constant K6513 to a GRAY code and stores it in D0.

Example

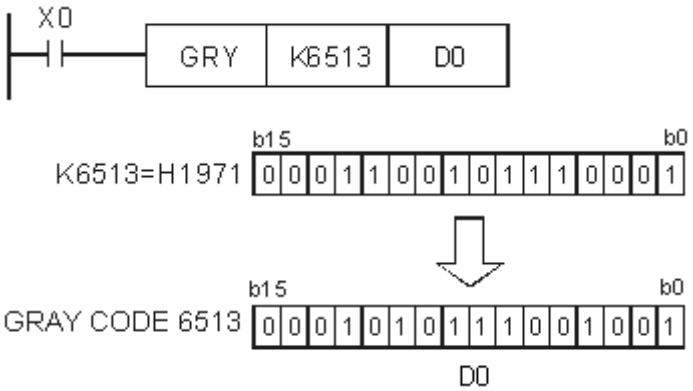

API 171	D	GBIN	P	S D	Convert GRAY code to BIN

	bit device			Word device							
	X	Y	M	K	H	KnX	KnY	KnM	T	C	D
S				*	*	*	*	*	*	*	*
D							*	*	*	*	*

Notes on operand usage:
Refer to the function specifications table for each device in series for the scope of device usage.

16-bit command (5 STEP)

GBIN	Continuous execution type	GBINP	Pulse execution type

32-bit command (9 STEP)

DGBIN	Continuous execution type	DGBINP	Pulse execution type

Flag signal: none

Explanation

- **S**: source device storing GRAY code. **D**: device storing BIN value after conversion.
- Converts the GRAY code corresponding to the value of the device designated by **S** that is converted into a BIN value, and stores it in the device designated by **D**.
- This command converts the value of the absolute position encoder connected with the PLC's input (this encoder usually has an output value in the form of GRAY code) into a BIN value, and stores it in the designated register.
- The valid range of **S** is as shown below; if you exceed this range, it is an error, and the command does not execute.

  16-bit command: 0–32,767
  32-bit command: 0–2,147,483,647

Example

- When X20 = ON, converts the GRAY code of the absolute position encoder connected with input points X0–X17 to a BIN value and stores it in D10.

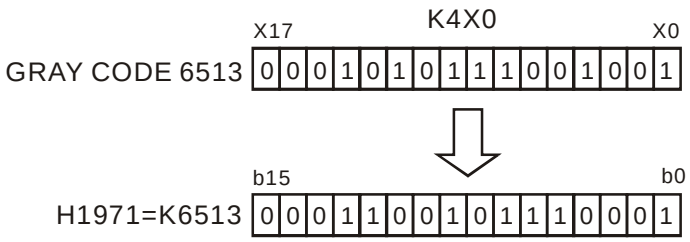

API 202	SCAL P	S1 S2 S3 D	Scale value operation

	bit device			Word device							
	X	Y	M	K	H	KnX	KnY	KnM	T	C	D
S1				*	*						*
S2				*	*						*
S3				*	*						*
D											*

Notes on operand usage:
Refer to the function specifications table for each device in series for the scope of device usage.

16-bit command (9 STEP)

SCAL	Continuous execution type	SCALP	Pulse execution type

32-bit command

-	-	-	-

- Flag signal: none

Explanation

- **S1**: Data source. **S2**: Slope, unit: 0.001. **S3**: Offset. **D**: Destination device.
- The operation equation in the instruction: D = (S1 × S2) ÷ 1000 + S3
- To obtain the values in S2 and S3, users have to use the slope equation and the offset equation below first, and then round off the results to the nearest whole digit. The final 16-bit value are entered into S2 and S3.
- The slope equation: S2 = [(maximum destination value – minimum destination value) ÷ (maximum source value –maximum source value)] × 1000
- The offset equation: S3 = minimum destination value –maximum source value × S2 ÷ 1000
- The output curve is as shown below:

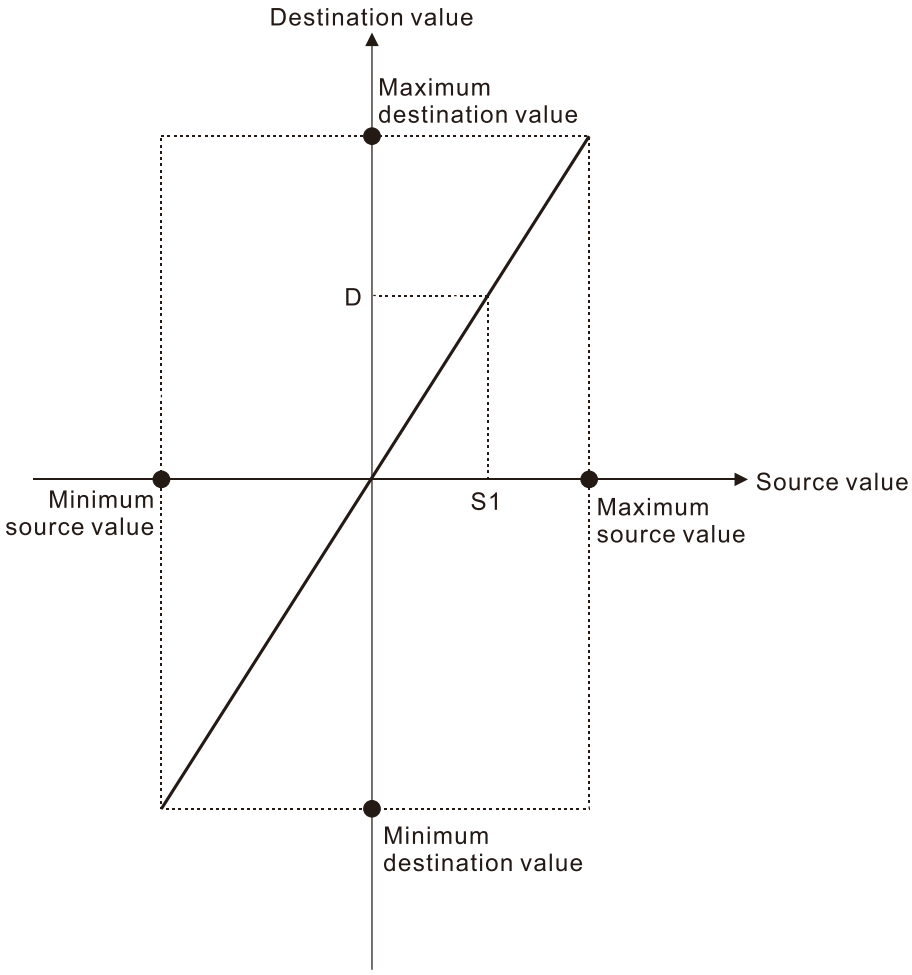

Example

- Suppose the values in S1, S2, and S3 are 500, 168, and -4 respectively. When X0 is ON, the instruction SCAL is executed, and the scale value is stored in D0.

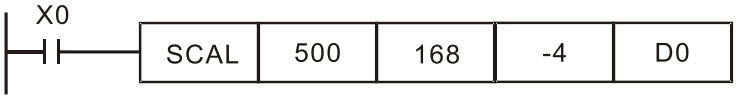

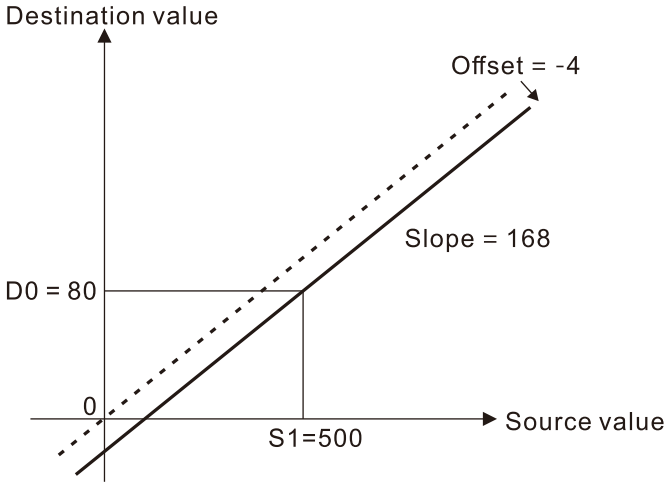

API 215–217	D	LD#		S1 S2	Contact form logical operation LD#

	bit device			Word device							
	X	Y	M	K	H	KnX	KnY	KnM	T	C	D
S1				*	*	*	*	*	*	*	*
S2				*	*	*	*	*	*	*	*

Notes on operand usage: #, :, &, |, ^
Refer to the function specifications table for each device in series for the range of device usage.

16-bit command (5 STEP)

LD#	Continuous execution type	-	-

32-bit command (9 STEP)

DLD#	Continuous execution type	-	-

Flag signal: none

Explanation

- **S_1**: data source device 1. **S_2**: data source device 2.
- This command compares the contents of **S_1** and **S_2**. When the result of comparison is not 0, this command activates; when the result of comparison is 0, this command does not activate.
- You can use the LD# command directly to connect with the busbar

API No.	16-bit Commands	32-bit Commands	Conditions for Activation	Conditions for Inactivation
215	LD&	**D**LD&	S_1 & S_2 $\neq 0$	S_1 & S_2 $=0$
216	LD|	**D**LD|	S_1 | S_2 $\neq 0$	S_1 | S_2 $=0$
217	LD^	**D**LD^	S_1 ^ S_2 $\neq 0$	S_1 ^ S_2 $=0$

&: logical AND operation.

|: logical OR operation.

^: logical XOR operation.

Example

- When you compare the contents of C0 and C10 with the logical AND operation, and the result is not equal to 0, then Y10 = ON.
- When you compare the content of D200 and D300 with the logical OR operation, and the result is not equal to 0, and X1 = ON, then Y11 = ON and remains in that state.

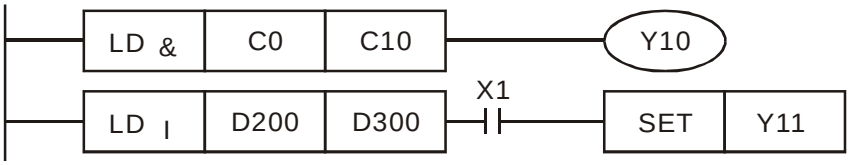

API 218–220	D	AND#		S1 S2	Contact form logical operation AND#

	bit device			Word device							
	X	Y	M	K	H	KnX	KnY	KnM	T	C	D
S1				*	*	*	*	*	*	*	*
S2				*	*	*	*	*	*	*	*

Notes on operand usage:: #, :, &, |, ^
Refer to the function specifications table for each device in series for the scope of device usage.

16-bit command (5 STEP)			
AND#	Continuous execution type	-	-

32-bit command (9 STEP)			
DAND#	Continuous execution type	-	-

Flag signal: none

Explanation

- **S_1**: data source device 1. **S_2**: data source device 2.
- This command compares the contents of **S_1** and **S_2**. When the result of comparison is not 0, this command activates; when the result of comparison is 0, this command does not activate.
- The AND# command is an operation command in series with the contact.

API No.	16-bit Commands	32-bit Commands	Conditions for Activation	Conditions for Inactivation
218	AND&	**D**AND&	S_1 & S_2 $\neq 0$	S_1 & S_2 $=0$
219	AND|	**D**AND|	S_1 | S_2 $\neq 0$	S_1 | S_2 $=0$
220	AND^	**D**AND^	S_1 ^ S_2 $\neq 0$	S_1 ^ S_2 $=0$

&: logical AND operation.

|: logical OR operation.

^: logical XOR operation.

Example

- When X0 = ON and you compare the contents of C0 and C10 with the logical AND operation, and the result is not equal to 0, then Y10 = ON.
- When X1 = OFF and you compare the contents D10 and D0 with the logical OR operation, and the result is not equal to 0, then Y11 = ON and remains in that state.
- When X2 = ON and you compare the contents of the 32-bit register D200 (D201) and the 32-bit register D100 (D101) with the logical XOR operation, and the result is not equal to 0 or M3 = ON, then M50 = ON.

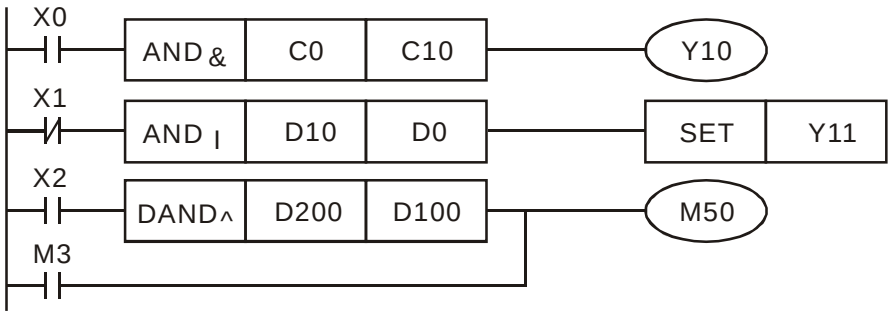

API 221–223	D	OR#		S1 S2	Contact form logical operation OR#

	bit device			Word device							
	X	Y	M	K	H	KnX	KnY	KnM	T	C	D
S1				*	*	*	*	*	*	*	*
S2				*	*	*	*	*	*	*	*

Notes on operand usage: #, :, &, |, ^
Refer to the function specifications table for each device in series for the scope of device usage.

16-bit command (5 STEP)			
OR#	Continuous execution type	-	-

32-bit command (9 STEP)			
DOR#	Continuous execution type	-	-

Flag signal: none

Explanation

- **S_1**: data source device 1. **S_2**: data source device 2.
- This command compares the contents of **S_1** and **S_2**. When the result of comparison is not 0, this command activates; when the result of comparison is 0, this command does not activate.

API No.	16-bit Commands	32-bit Commands	Conditions for Activation	Conditions for Inactivation
221	OR&	**D**OR&	**S_1** & **S_2** $\neq 0$	**S_1** & **S_2** $=0$
222	OR|	**D**OR|	**S_1** | **S_2** $\neq 0$	**S_1** | **S_2** $=0$
223	OR^	**D**OR^	**S_1** ^ **S_2** $\neq 0$	**S_1** ^ **S_2** $=0$

&: logical AND operation.

|: logical OR operation.

^: logical XOR operation.

Example

- Compare the contents of C0 and C10 with the logical AND operation, and the result is not equal to 0, then Y0 = ON.
- Compare the contents of the 32-bit register D10 (D11) and the 32-bit register D20 (D21) with the logical OR operation, and the result is not equal to 0, or you compare the contents of the 32-bit counter C235 and the 32-bit register D200 (D201) with the logical XOR operation, and the result is not equal to 0, then M60=ON.

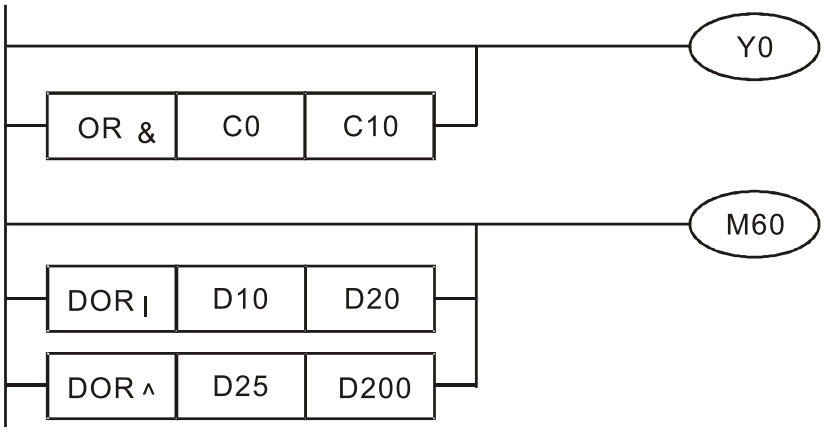

API 224–230	D	LD※		(S1) (S2)	Contact form compare LD*

	bit device			Word device							
	X	Y	M	K	H	KnX	KnY	KnM	T	C	D
S1				*	*	*	*	*	*	*	*
S2				*	*	*	*	*	*	*	*

Notes on operand usage: ※, : , =, >, <, <>, ≤, ≥
Refer to the function specifications table for each device in series for the scope of device usage.

16-bit command (5 STEP)			
LD※	Continuous execution type	-	-

32-bit command (9 STEP)			
DLD※	Continuous execution type	-	-

Flag signal: none

Explanation

- **S_1**: data source device 1. **S_2**: data source device 2.
- This command compares the contents of **S_1** and **S_2**. Taking API 224 (LD=) as an example, this command activates when the result of comparison is "equal," and does not activate when the result is "unequal."
- You can use the LD* directly to connect with the busbar

API No.	16-bit Commands	32-bit Commands	Conditions for Activation	Conditions for Inactivation
224	LD =	**D**LD =	**$S_1 = S_2$**	**$S_1 \neq S_2$**
225	LD >	**D**LD >	**$S_1 > S_2$**	**$S_1 \leq S_2$**
226	LD <	**D**LD <	**$S_1 < S_2$**	**$S_1 \geq S_2$**
228	LD < >	**D**LD < >	**$S_1 \neq S_2$**	**$S_1 = S_2$**
229	LD < =	**D**LD < =	**$S_1 \leq S_2$**	**$S_1 > S_2$**
230	LD > =	**D**LD > =	**$S_1 \geq S_2$**	**$S_1 < S_2$**

Example

- When the content of C10 is equal to K200, then Y10 = ON.
- When the content of D200 is greater than K-30, and X1 = ON, then Y11 = ON and remains in that state.
- When C20 < K678493 or MI = ON, then MI50 = ON.

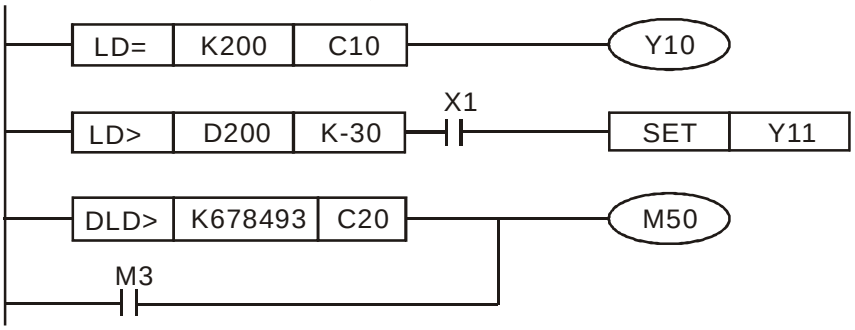

API 232–238	D	AND※		(S1) (S2)	Contact form compare AND*

	bit device			Word device							
	X	Y	M	K	H	KnX	KnY	KnM	T	C	D
S1				*	*	*	*	*	*	*	*
S2				*	*	*	*	*	*	*	*

Notes on operand usage: ※, : , =, >, <, <>, ≤, ≥
Refer to the function specifications table for each device in series for the scope of device usage.

16-bit command (5 STEP)

AND※	Continuous execution type	-	-

32-bit command (9 STEP)

DAND※	Continuous execution type	-	-

Flag signal: none

Explanation

- **S_1**: data source device 1. **S_2**: data source device 2.
- This command compares the contents of **S_1** and **S_2**. Taking API 232 (AND=) as an example, when the result of comparison is “equal”, this command activates; when the result of comparison is “unequal”, this command does not activate.
- The AND* command is a comparison command in series with a contact.

Api No.	16-bit Commands	32-bit Commands	Conditions for Activation	Conditions for Inactivation
232	AND =	**D**AND =	**$S_1 = S_2$**	**$S_1 \neq S_2$**
233	AND >	**D**AND >	**$S_1 > S_2$**	**$S_1 \leq S_2$**
234	AND <	**D**AND <	**$S_1 < S_2$**	**$S_1 \geq S_2$**
236	AND < >	**D**AND < >	**$S_1 \neq S_2$**	**$S_1 = S_2$**
237	AND < =	**D**AND < =	**$S_1 \leq S_2$**	**$S_1 > S_2$**
238	AND > =	**D**AND > =	**$S_1 \geq S_2$**	**$S_1 < S_2$**

Example

- When X0 = ON and the current value of C10 is also equal to K200, then Y10 = ON.
- When X1 = OFF and the content of register D0 is not equal to K-10, then Y11 = ON and remains in that state.
- When X2 = ON and the content of the 32-bit register D0 (D11) is less than 678,493, or M3 = ON, then M50 = ON.

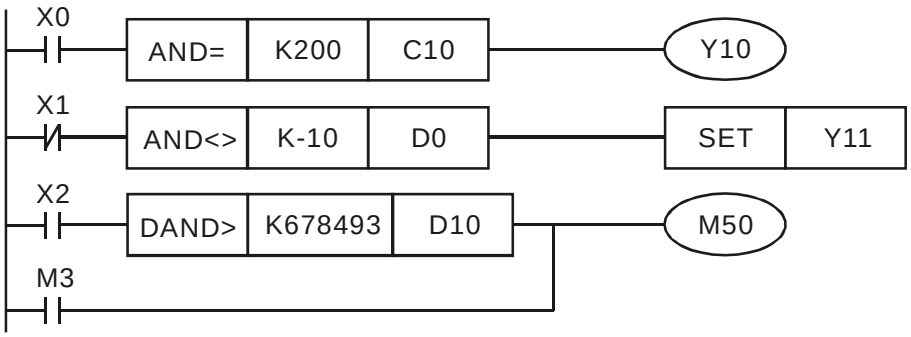

API 240–246	D	OR※		S1 S2	Contact form compare OR*

	bit device			Word device							
	X	Y	M	K	H	KnX	KnY	KnM	T	C	D
S1				*	*	*	*	*	*	*	*
S2				*	*	*	*	*	*	*	*

Notes on operand usage: ※, : , =, >, <, <>, ≤, ≥
Refer to the function specifications table for each device in series for the scope of device usage.

16-bit command (5 STEP)			
OR※	Continuous execution type	-	-

32-bit command (9 STEP)			
DOR※	Continuous execution type	-	-

Flag signal: none

Explanation

- **S_1**: data source device 1. **S_2**: data source device 2.
- This command compares the contents of **S_1** and **S_2**. Taking API 240 (OR=) as an example, when the result of comparison is “equal”, this command activates; when the result of comparison is “unequal”, this command does not activate.
- The OR* command is a comparison command in parallel with a contact.

Api No.	16-bit Commands	32-bit Commands	Conditions for Activation	Conditions for Inactivation
240	OR =	**D**OR =	**$S_1 = S_2$**	**$S_1 \neq S_2$**
241	OR >	**D**OR >	**$S_1 > S_2$**	**$S_1 \leq S_2$**
242	OR <	**D**OR <	**$S_1 < S_2$**	**$S_1 \geq S_2$**
244	OR < >	**D**OR < >	**$S_1 \neq S_2$**	**$S_1 = S_2$**
245	OR < =	**D**OR < =	**$S_1 \leq S_2$**	**$S_1 > S_2$**
246	OR > =	**D**OR > =	**$S_1 \geq S_2$**	**$S_1 < S_2$**

Example

- When X1 = ON, or the current value of C10 is less than / equal to 200, then Y0 = ON.
- When X2 = ON and M30 = ON, or the content of the 32-bit register D100 (D101) is more than / equal to 100000, then M60 = ON.

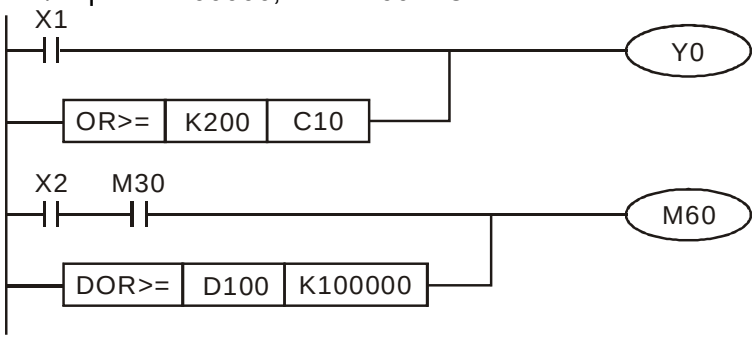

API 275–280		FLD※		(S1) (S2)	Floating point number contact form compare LD*

	bit device			Word device							
	X	Y	M	K	H	KnX	KnY	KnM	T	C	D
S1									*	*	*
S2									*	*	*

Notes on operand usage: ※, : , =, >, <, <>, ≤, ≥
Refer to the function specifications table for each device in series for the scope of device usage.

16-bit command			
-	-	-	-

32-bit command (9 STEP)			
FLD※	Continuous execution type	-	-

Flag signal: none

Explanation

- **S_1**: data source device 1. **S_2**: data source device 2.
- This command compares the contents of **S_1** and **S_2**. Taking "FLD=" as an example, if the result of comparison is “equal”, this command activates; but it does not activate when the result is “unequal”.
- The FLD* command can directly input floating point numbers (for instance: F1.2) to the **S_1**, **S_2** operands, or store floating point numbers in register D for use in operations.
- You can use this command while directly to connect with the busbar

Api No.	32-bit Commands	Conditions for Activation	Conditions for Inactivation
275	FLD =	**$S_1 = S_2$**	**$S_1 \neq S_2$**
276	FLD >	**$S_1 > S_2$**	**$S_1 \leq S_2$**
277	FLD <	**$S_1 < S_2$**	**$S_1 \geq S_2$**
278	FLD < >	**$S_1 \neq S_2$**	**$S_1 = S_2$**
279	FLD < =	**$S_1 \leq S_2$**	**$S_1 > S_2$**
280	FLD > =	**$S_1 \geq S_2$**	**$S_1 < S_2$**

Example

- When the floating point number in register D200 (D201) is less than or equal to F1.2, and X1 is activated, then contact Y21 activates and remains in that state.

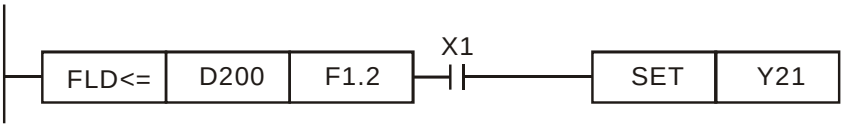

API 281–286		FAND※		(S1) (S2)	Floating point number contact form compare AND*

	bit device			Word device							
	X	Y	M	K	H	KnX	KnY	KnM	T	C	D
S1									*	*	*
S2									*	*	*

Notes on operand usage: ※, : , =, >, <, <>, ≤, ≥
Refer to the function specifications table for each device in series for the scope of device usage.

16-bit command			
-	-	-	-

32-bit command (9 STEP)			
FAND※	Continuous execution type	-	-

Flag signal: none

Explanation

- **S_1**: data source device 1. **S_2**: data source device 2.
- This command compares the contents of **S_1** and **S_2**. Taking "FAND=" as an example, if the result of comparison is “equal”, this command activates; but it does not activate when the result is “unequal”.
- The FAND* command can directly input floating point numbers (for instance: F1.2) to the **S_1** and **S_2** operands, or store the floating point numbers in register D for use in operations.
- You can use this command directly to connect with the busbar.

Api No.	32-bit Commands	Conditions for Activation	Conditions for Inactivation
281	FAND =	**$S_1 = S_2$**	**$S_1 \neq S_2$**
282	FAND >	**$S_1 > S_2$**	**$S_1 \leq S_2$**
283	FAND <	**$S_1 < S_2$**	**$S_1 \geq S_2$**
284	FAND < >	**$S_1 \neq S_2$**	**$S_1 = S_2$**
285	FAND < =	**$S_1 \leq S_2$**	**$S_1 > S_2$**
286	FAND > =	**$S_1 \geq S_2$**	**$S_1 < S_2$**

Example

- When X1 = OFF, and the floating point number in register D100 (D101) is not equal to F1.2, then Y21 = ON and remains in that state.

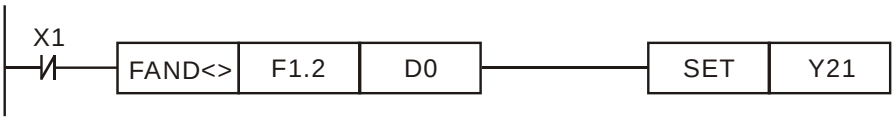

API 287–292		FOR※		(S1) (S2)	Floating point number contact form compare OR*

	bit device			Word device							
	X	Y	M	K	H	KnX	KnY	KnM	T	C	D
S1									*	*	*
S2									*	*	*

Notes on operand usage: ※, : , =, >, <, <>, ≤, ≥
Refer to the function specifications table for each device in series for the scope of device usage.

16-bit command			
-	-	-	-

32-bit command (9 STEP)			
FOR※	Continuous execution type	-	-

Flag signal: none

Explanation

- **S_1**: data source device 1. **S_2**: data source device 2.
- This command compares the contents of **S_1** and **S_2**. Taking "FOR=" as an example, if the result of comparison is “equal”, this command activates; but it does not activate when the result is “unequal”.
- The FOR* command can directly input floating point numbers (for instance: F1.2) to the **S_1**, **S_2** operands, or store floating point numbers in register D for use in operations.
- You can use this command directly to connect with the busbar.

Api No.	32-bit Commands	Conditions for Activation	Conditions for Inactivation
287	FOR =	**$S_1 = S_2$**	**$S_1 \neq S_2$**
288	FOR >	**$S_1 > S_2$**	**$S_1 \leq S_2$**
289	FOR <	**$S_1 < S_2$**	**$S_1 \geq S_2$**
290	FOR < >	**$S_1 \neq S_2$**	**$S_1 = S_2$**
291	FOR < =	**$S_1 \leq S_2$**	**$S_1 > S_2$**
292	FOR > =	**$S_1 \geq S_2$**	**$S_1 < S_2$**

Example

- When X2 and M30 are both equal to ON, or the floating point number in register D100 (D101) is greater than or equal to F1.234, then M60 = ON.

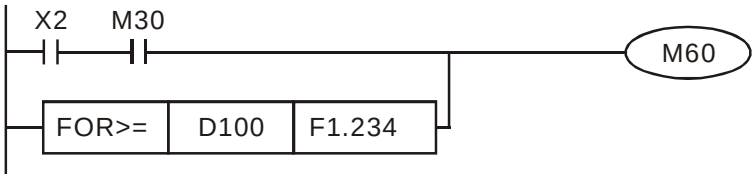

16-6-5 Detailed explanation of drive special application commands

API 139	RPR P	S1 S2	Read servo parameter

	bit device			Word device							
	X	Y	M	K	H	KnX	KnY	KnM	T	C	D
S1				*	*						*
S2											*

Notes on operand usage: none

16-bit command (5 STEP)			
RPR	Continuous execution type	RPRP	Pulse execution type
32-bit command			
-	-	-	-

Flag signal: none

Explanation

- **S_1**: Parameter address of data to be read. **S_2**: Register where data that is read is stored.

API 140	WPRA P	S1 S2	Write servo parameter

	bit device			Word device							
	X	Y	M	K	H	KnX	KnY	KnM	T	C	D
S1				*	*						*
S2				*	*						*

Notes on operand usage: none

16-bit command (5 STEP)			
WPRA	Continuous execution type	WPRP	Pulse execution type
32-bit command			
-	-	-	-

Flag signal: M1016 parameter read/write error, M1017 parameter written successfully.

Explanation

- **S_1**: Data to write to specified page. **S_2**: Parameter address of data to be written.

Example

- When the data in the MS300 drive's parameter H01.00 is read and written to D0, data from H01.01 is read and written to D1.
- When M0 = ON, the content of D10 is written to the MS300 drive Pr.04.00 (first speed of multiple speed levels).
- When M1017 = ON, the parameter has been written successfully.
- The MS300's WPRA command does not support writing to the 20XX address, but the RPR command supports reading of 21XX, 22XX, 61XX.

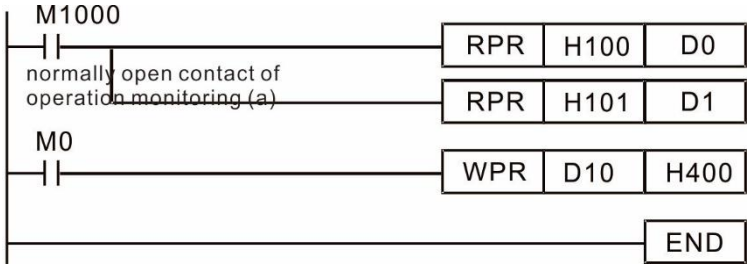

Recommendation: Be cautious when using the WPRA command. When writing parameters, most parameters are recorded when they are written, and these parameters may only be revised 10^6 times: a memory write error may occur if parameters are written more than (MS)10^6 or (MH)10^9 times.

The following commonly-used parameters have special treatment, so there are no limits for the number of times that they can be written.

Pr.00-10: Control method
Pr.00-11: Speed mode selection
Pr.00-27: User-defined value
Pr.01-12: Acceleration time 1
Pr.01-13: Deceleration time 1
Pr.01-14: Acceleration time 2
Pr.01-15: Deceleration time 2
Pr.01-16: Acceleration time 3
Pr.01-17: Deceleration time 3
Pr.01-18: Acceleration time 4
Pr.01-19: Deceleration time 4
Pr.02-12: Select MI Conversion Time mode
Pr.02-18: Select MO Conversion Time mode
Pr.04-50–Pr.04-69: PLC register parameter 0–19
Pr.08-04: Upper limit of integral control
Pr.08-05: PID output upper limit
Pr.10-17: Electronic gear A
Pr.10-18: Electronic gear B
Pr.11-34: Torque command

The number of times a parameter is written is based on whether the written value is modified. For instance, writing the same value 100 times at the same time counts as writing only once. When writing a PLC program, if you are not sure the usage of the WPRA command, it is recommended that you use the WPRP command.

API 141		FPID	P	S1 S2 S3 S4	Drive PID control mode

	bit device			Word device							
	X	Y	M	K	H	KnX	KnY	KnM	T	C	D
S1				*	*						*
S2				*	*						*
S3				*	*						*
S4				*	*						*

Notes on operand usage: none

16-bit command (9 STEP)

FPID	Continuous execution type	FPIDP	Pulse execution type

32-bit command

-	-	-	-

Flag signal: none

Explanation

- **S_1**: PID reference target value input terminal selection. **S_2**: PID function proportional gain P. **S_3**: PID function integral time I. **S_4**: PID function differential time D.
- The FPID command can directly control the drive's PID feedback control Pr.08-00 Terminal Selection of PID Feedback, Pr.08-01 Proportional Gain (P), Pr.08-02 Integral Time (I), and Pr.08-03 Differential Time (D).

Example

- When M0 = ON, the set PID reference target value input terminal selection is 0 (no PID function), the PID function proportional gain P is 0, the PID function integral time I is 1 (units: 0.01 sec.), and the PID function differential time D is 1 (units: 0.01 sec.).
- When M1 = ON, the set PID reference target value input terminal selection is 0 (no PID function), the PID function proportional gain P is 1 (units: 0.01), the PID function integral time I is 0, and the PID function differential time D is 0.
- When M2 = ON, the set PID reference target value input terminal selection is 1 (target frequency input is controlled through the digital keypad), the PID function proportional gain P is 1 (units: 0.01), the PID function integral time I is 0, and the PID function differential time D is 0.
- D1027: Frequency command after PID operation.

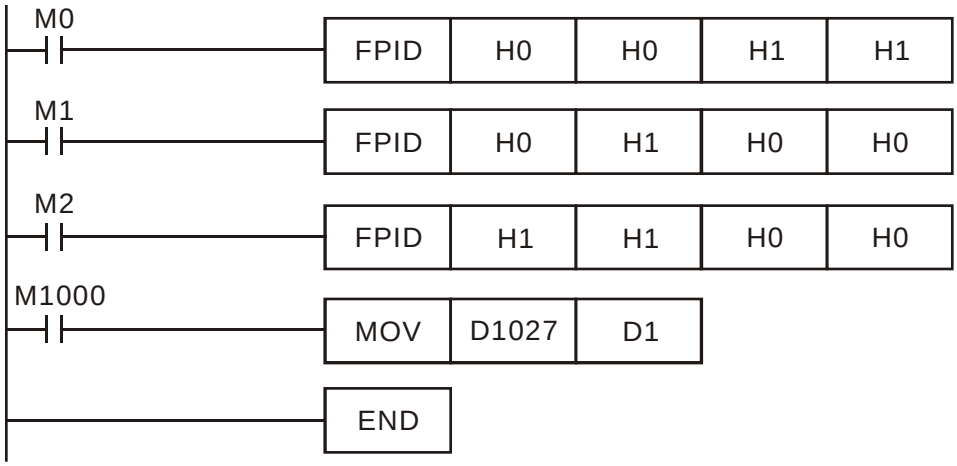

API 142	FREQ	P	S1 S2 S3	Drive speed control mode

	bit device			Word device							
	X	Y	M	K	H	KnX	KnY	KnM	T	C	D
S1				*	*						*
S2				*	*						*
S3				*	*						*

Notes on operand usage: none

16-bit command (7 STEP)			
FREQ	Continuous execution type	FREQP	Pulse execution type

32-bit command			
-	-	-	-

Flag signal: M1015

Explanation

- **S_1**: Frequency command. **S_2**: Acceleration time. **S_3**: Deceleration time
- **S_2**,S3: In the acceleration and deceleration time settings, the number of decimal places is determined by the definition in Pr.01-45.
  Example
  When Pr.01-45 = 0: units of 0.01 sec.
  A setting of **S_2** = 50 (acceleration time) in the ladder diagram below implies 0.5 sec., and the **S_3** (deceleration time) setting of 60 implies 0.6 sec..
- The FREQ command can control drive Frequency commands, and acceleration and deceleration time. It also uses special register control actions, such as:
  M1025: Control drive RUN(ON)/STOP(OFF) (RUN requires Servo On (M1040 ON) to be effective)
  M1026: Control drive operating direction FWD(OFF)/REV(ON)
  M1040: Control Servo On/Servo Off.
  M1042: Trigger Quick Stop (ON)/does not trigger Quick Stop (OFF).
  M1044: Pause (ON)/release pause (OFF)
  M1052: Lock frequency (ON)/release lock frequency (OFF)

Example

- M1025: Drive RUN (ON)/STOP (OFF), M1026: drive operating direction FWD (OFF)/REV (ON). M1015: frequency reached.
- When M10 = ON, sets the drive frequency command K300 (3.00 Hz) with an acceleration and deceleration time of 0.
  When M11 = ON, sets the drive frequency command K3000 (30.00 Hz), with an acceleration time of 50 (0.5 sec.) and deceleration time of 60 (0.6 sec.) (when Pr.01-45 = 0).
- When M11 = OFF, the drive frequency command changes to 30 Hz.

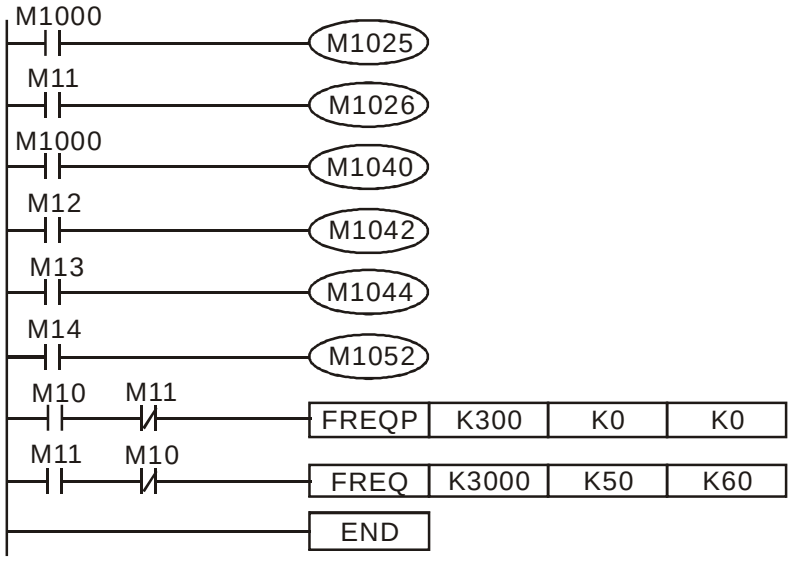

- Pr.09-33 are defined on the basis of whether reference commands have been cleared before the PLC operation

  bit 0: Prior to PLC scanning procedures, acts on whether the target frequency has been cleared to 0. This is written to the FREQ command when the PLC is ON.

  bit 1: Prior to PLC scanning procedures, acts on whether the target torque has been cleared to 0. This is written to the TORQ command when the PLC is ON.

  bit 2: Prior to PLC scanning procedures, acts on whether speed limits in the torque mode have been cleared to 0. This is written to the TORQ command when the PLC is ON.

  Example: When using r to write a program,

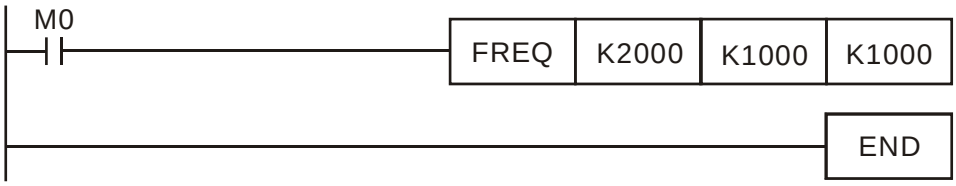

  If we force M0 to 1, the frequency command is 20.00 Hz; but when M0 is set to 0, there is a different situation.

Case 1: When the Pr.09-33 bit 0 is 0, and M0 is set as 0, then the frequency command remains at 20.00 Hz.

Case 2: When the Pr.09-33 bit 0 is 1, and M0 is set as 0, then the frequency command changes to 0.00 Hz

This is because when the Pr.09-33 bit 0 is 1 prior to PLC scanning procedures, the frequency first reverts to 0.

When the Pr.09-33 bit 0 is 0, the frequency does not revert to 0.

16-7 Error Display and Handling

Code	ID	Description	Recommended error resolution
PLod	50	The addresses in program exceed the range during PLC downloading. For example, T only supports T0–T159, however, if you use T160, PLod warning shows during PLC downloading.	Check whether the program has an error, correct it and download the program again.
PLSv	51	The program detects incorrect written address during PLC operation, then PLSv warning occurs.	Check if the program is correct and download the program again.
PLdA	52	The program detects incorrect read/written address from Modbus during PLC operation, then PLdA warning occurs.	Check if the command that the host controller transmits is correct.
PLFn	53	When unsupported commands are found during PLC downloading, then PLFn warning shows.	Check if the firmware of the drive is the old version. If yes, please contact Delta.
PLor	54	When internal program code errors are detected during PLC operation, then PLor warning shows.	1. Disable PLC function 2. Clear PLC program (set Pr.00-02 = 6) 3. Enable PLC function 4. Download PLC program again
PLFF	55	When the corresponding command that PLC executes is unreasonable during PLC operation, then PLFF warning shows.	When PLC function is enabled and there is no program in the internal PLC program, then PLFF warning shows. This is a normal situation. You can download the program directly.
PLSn	56	Checksum error occurs during PLC operation.	1. Disable PLC function 2. Clear PLC program (set Pr.00-02 = 6) 3. Enable PLC function 4. Download PLC program again
PLEd	57	No END command during PLC operation.	1. Disable PLC function 2. Clear PLC program (set Pr.00-02 = 6) 3. Enable PLC function 4. Download PLC program again
PLCr	58	MC command has been used continuously more than nine times.	Cannot continuously use MC command more than nine times. Check whether the program has an error and download the program again.
PLdF	59	Forced to stop during PLC downloading and causes incomplete writing.	Check whether the program has an error and download again.
PLSF	60	PLC scan time excessively long	Check whether the program code has a writing error and download again.

Table 16-25

16-8 Explanation of PLC Speed Mode Control

The following tables describe the control mode and setting. These are the register tables for speed mode.

Control special M

Special M	Function Description	Attributes
M1025	Drive frequency = set frequency (ON) / drive frequency = 0 (OFF)	RW
M1026	Drive operating direction FWD (OFF) / REV (ON)	RW
M1040	Hardware power (Servo On)	RW
M1042	Quick Stop	RW
M1044	Pause (Halt)	RW
M1052	Lock frequency (lock, frequency locked at the current operating frequency)	RW

Table 16-26

Status special M

Special M	Function Description	Attributes
M1015	Frequency reached (when used with M1025)	RO
M1056	Hardware already has power (Servo On Ready)	RO
M1058	On Quick Stopping	RO

Table 16-27

Control special D

Special D	Function Description	Attributes
D1060	Mode setting (speed mode is 0)	RW

Table 16-28

Status special D

Special D	Function Description	Attributes
D1037	Drive output frequency (0.00–599.00 Hz)	RO
D1050	Actual operation mode (speed mode is 0)	RO

Table 16-29

Speed mode control commands:

FREQ (P)	S1	S2	S3
	Target speed	The first acceleration time setting	The first deceleration time setting

Example of speed mode control:

Before using speed control, if you use the FOC (magnetic field orientation) control method, you must first complete the setting of the electro-mechanical parameters.

1. Setting D1060 = 0 shifts the drive to speed mode (default).
2. Use the FREQ command to control frequency, acceleration time, and deceleration time.
3. Setting M1040 = 1, the drive is now excited, but the frequency is 0.
4. Setting M1025 = 1, the drive Frequency command now jumps to the frequency designated by FREQ, and acceleration and deceleration is controlled on the basis of the acceleration time and deceleration time specified by FREQ.
5. Use M1052 to lock the current operation frequency.
6. Use M1044 to temporarily pause the operation, and the deceleration method uses the deceleration settings.

7. Use M1042 to perform Quick Stop, and deceleration is as fast as possible without causing an error. There may still be a jump error if the load is too large.
8. Control user rights: M1040 (Servo ON) > M1042 (Quick Stop) > M1044 (Halt) > M1052 (LOCK)

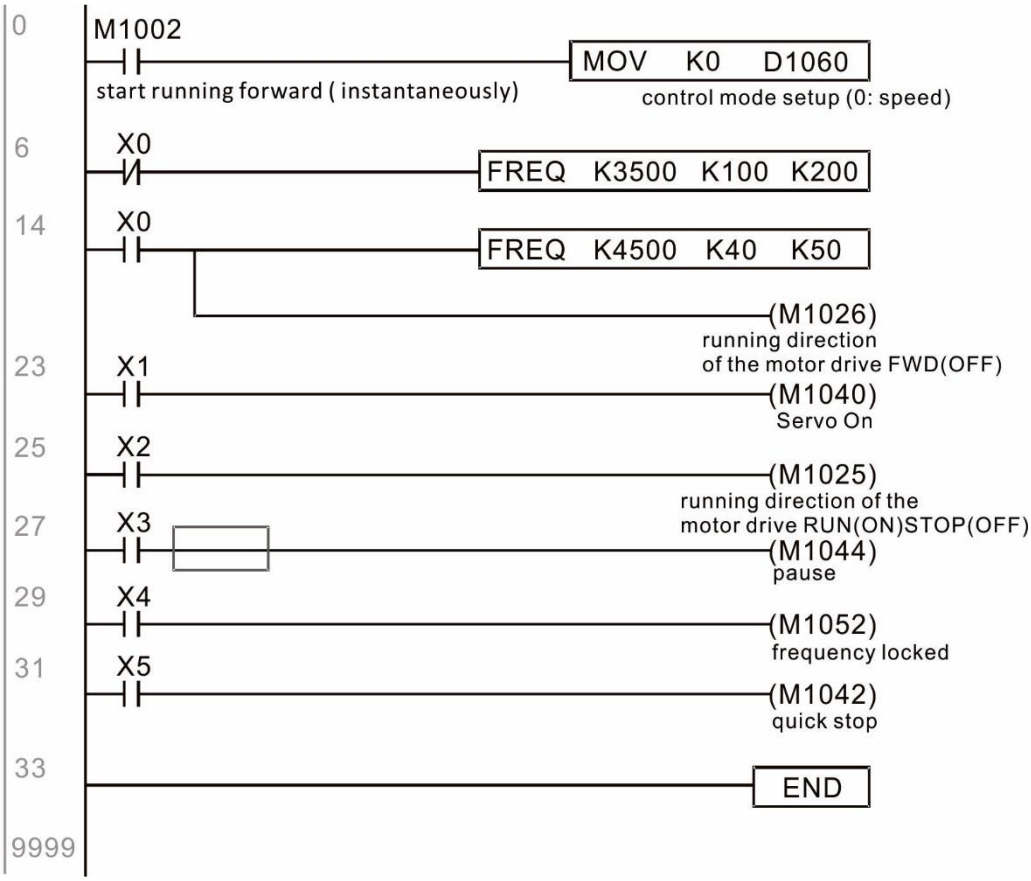

16-9 Count Function Using Pulse Input

16-9-1 High-speed count function

The MS300's MI7 supports one-way pulse counting with a maximum speed of 33 k. The starting method is very simple, and only requires setting M1038 to begin counting. The 32-bit count value is stored in D1054 and D1055 in non-numerical form. M1039 resets the count value to 0.

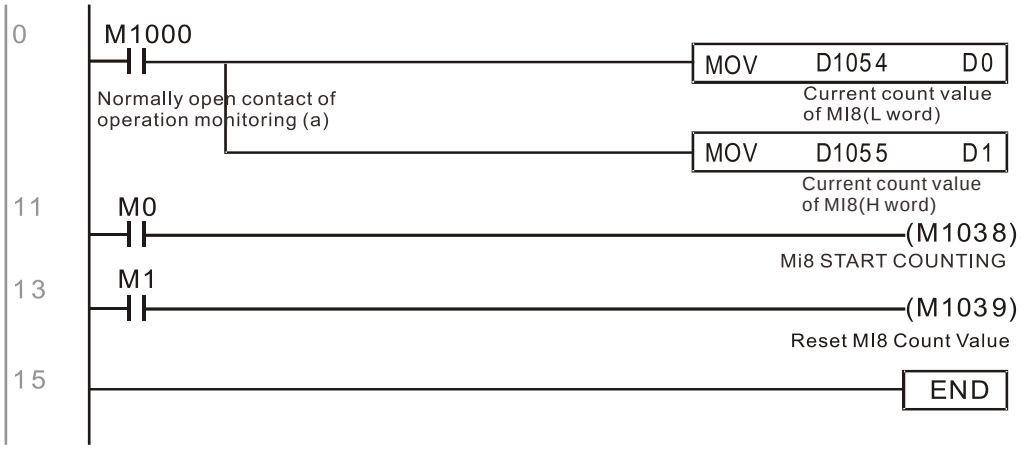

NOTE: When the PLC program defines MI7 for use as a high-speed counter, that is, when M1038 or M1039 is written in PLC procedures, other functions of MI7 are disabled.

16-9-2 Frequency calculation function

Apart from high-speed counting, the MS300's MI7 can also convert a received pulse to a frequency. The following figure shows that there is no conflict between frequency conversion and count calculations, which the MS300 can perform simultaneously.

PLC speed calculation formula

D1057 Speed

D1058 Interval between calculations

D1059 Decimal places

Assume that there are five input pulses each second, (see figure below) we set D1058 = 1000 ms = 1.0 second as the calculation interval. This enables five pulses to be sent to the drive each second.

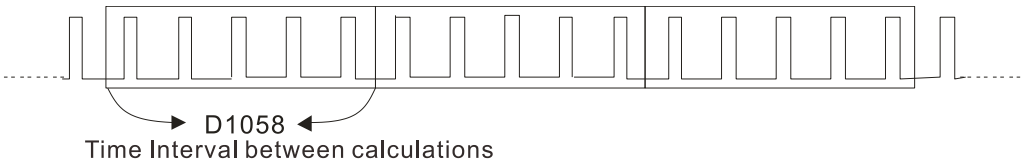

Assume that each five pulses correspond to 1 Hz, we set D1057 = 5.

Setting D1059 = 2 displays numbers to two decimal places, which is also 1.00 Hz. The numerical value displayed at D1056 is 100. For simplicity, the D1059 conversion formula can be expressed in the following formula:

$$D1058 = \frac{\text{Pulses per second}}{D1057} \times \frac{1000}{D1057} \times 10^{D1059}$$

[This page is intentionally left blank]

Chapter 17 Safe Torque Off Function

17-1 Basic Function Description

17-2 Safe Torque Off Terminal Function Description

17-3 Wiring Diagram

17-4 Failure Rate of the Drive Safety Function

17-5 Reset the Parameter Settings

17-6 Timing Diagram Description

17-7 Error Code and Troubleshooting Instructions

17-8 Test and Fault Confirmation

17-1 Basic Function Description

The MS300 series provides a Safe Torque Off (STO) function. The MS300 series uses dual-channel S1 and S2 signal inputs to turn off IGBT switching, further preventing the generation of motor torque in order to achieve a safe stop. Refer to Figure 17-1 for the Safe Torque Off function circuit diagram.

The MS300 Safe Torque Off function meets the following international standards:

- ISO 13849-1: 2015 Category 3 PL d
- IEC 61508 SIL2
- EN 62061 SIL CL 2
- EN 60204-1 Category 0

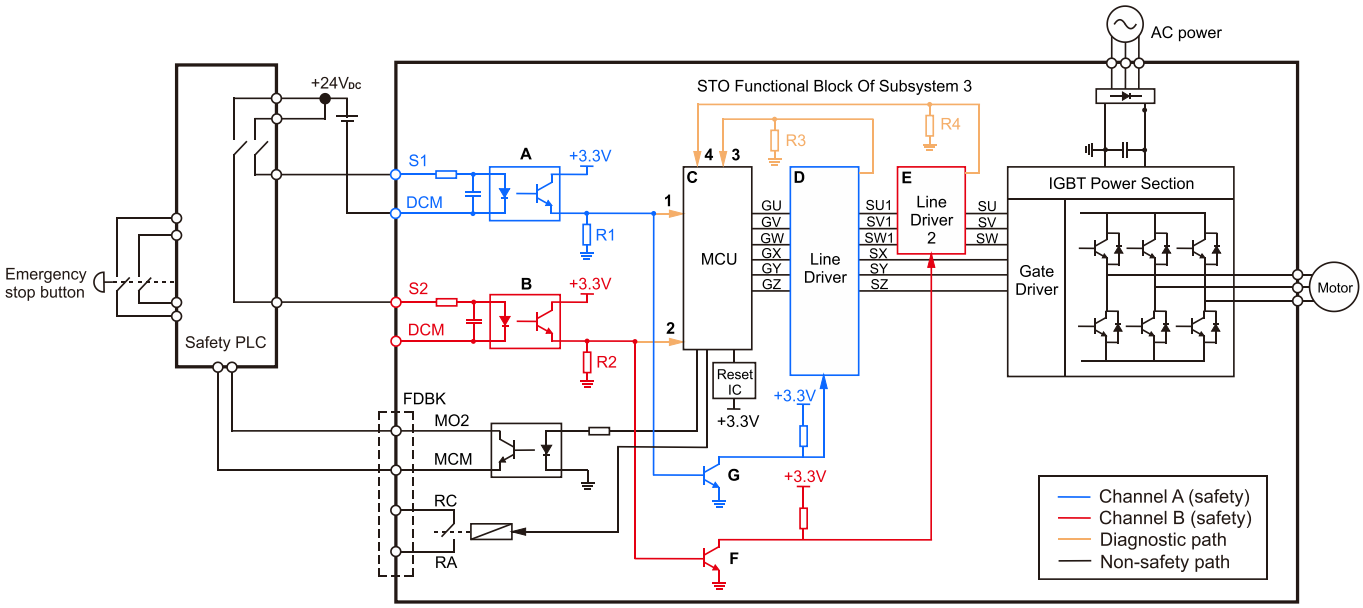

Figure 17-1: The circuit diagram for the Safe Torque Off function

17-2 Safe Torque Off Terminal Function Description

Table 17-1 describes the STO (Safe Torque Off) related terminal functions.

Terminals	Terminal Function	Descriptions
+24 V	When the STO function is not used, you can disable the STO function by shorting S1 and S2 with + 24 V.	Output voltage range: +24 V ± 10% Output voltage capacity: 100 mA
S1	Signal input for STO function channel 1	**S1–DCM / S2–DCM** Rated input voltage: +24 V_{DC} ± 10%; maximum input voltage: +30 V_{DC} ± 10% Rated input current: 6.67 mA ± 10% **STO activation mode** Input voltage level: 0 V_{DC} < S1–DCM < 5 V_{DC} or 0 V_{DC} < S2–DCM < 5 V_{DC} STO response time: ≤ 20 ms (time required for S1 / S2 to operate until the drive stops outputting) **STO cut-off mode** Input voltage level: 11 V_{DC} < S1–DCM < 30 V_{DC} and 11 V_{DC} < S2–DCM < 30 V_{DC}
S2	Signal input for STO function channel 2	
DCM	Reference ground for S1 and S2 signal	

Table 17-1: STO terminal function description

Table 17-2 describes the action logic and keypad display after the S1 / S2 signal input.

Signal	Status			
S1–DCM	ON	ON	OFF	OFF
S2–DCM	ON	OFF	ON	OFF
Drive output	Ready to output	STL2 mode (Torque output off)	STL1 mode (Torque output off)	STO mode (Torque output off)
Error displayed on the keypad	No error displayed	STL2	STL1	STO

Table 17-2: Action logic and keypad display description

- STO means channel 1 and 2 operate simultaneously and enter Safe Torque Off.
- STL1 means channel 1 operates.
- STL2 means channel 2 operates.
- STL3 means there is an error detected in the internal loop of the channel 1 or channel 2.
- S1–DCM / S2–DCM ON: means S1–DCM / S2–DCM inputs a power supply > 11 V_{DC}.
- S1–DCM / S2–DCM OFF: means S1–DCM / S2–DCM inputs a power supply < 5 V_{DC}.

17-3 Wiring Diagram

- Figure 17-2 shows the internal circuit diagram of the safe control loop.
- The terminals of the safe control loop + 24V-S1-S2 are short-circuited together with the jumper wire at the factory, as shown in Figure 17-2.
- The safe control loop wiring diagram is as follows:
  1. Remove the jumper wire from +24V-S1-S2.
  2. The wiring is shown in Figure 17-3 below. Normally, you must close the ESTOP contact switch, so the drive can output without displaying an error.
  3. In STO mode, the switch ESTOP is turned on. The drive stops outputting and the keypad displays STO.

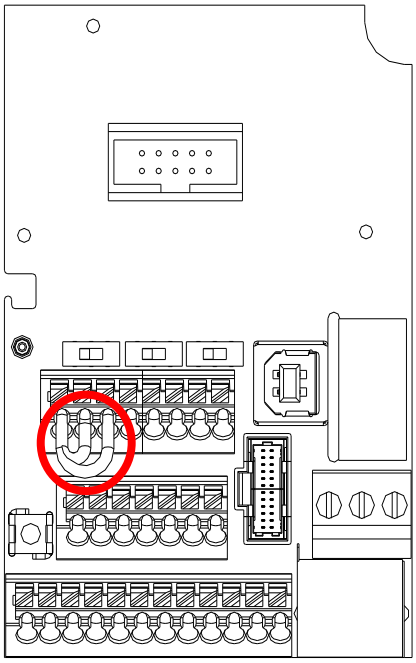

Figure 17-2

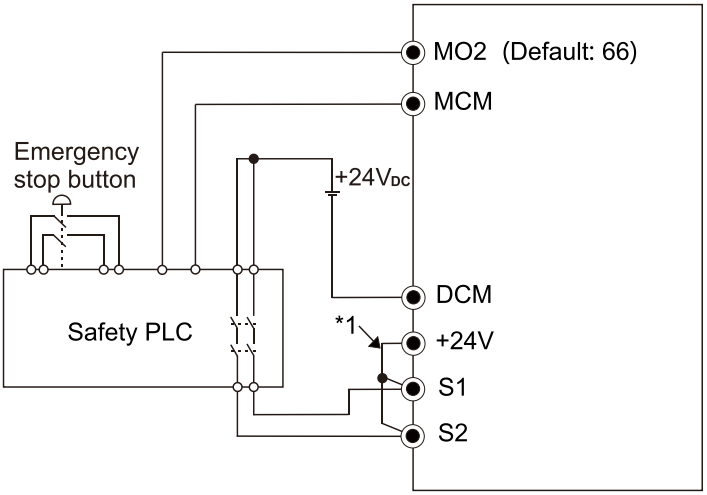

Figure 17-3

NOTE:

*1 is factory jumper wire shorting +24V-S1-S2. To use the Safety function, remove this jumper wire. To disable the Safety function, short-circuit +24V-S1-S2 with a jumper wire.

17-4 Failure Rate of the Drive Safety Function

Refer to Table 17-3 for the relevant safe loop parameters.

Item	Definition	Standard	Performance
SFF	Safe failure fraction	IEC61508	S1–DCM = 88.35% S2–DCM = 88.2%
HFT (Type A subsystem)	Hardware fault tolerance	IEC61508	1
SIL	Safety integrity level	IEC61508	SIL 2
		IEC62061	SILCL 2
PFH	Average frequency of dangerous failure [h-1]	IEC61508	1.36×10^{-9}
PFD_{av}	Probability of dangerous failure on demand	IEC61508	5.99×10^{-6}
PTI	Proof test interval	IEC61508	1 year
Category	Category	ISO13849-1	Category 3
PL	Performance level	ISO13849-1	d
$MTTF_d$	Mean time to dangerous failure	ISO13849-1	High
DC	Diagnostic coverage	ISO13849-1	Low

Table 17-3: Relevant safe loop parameters

17-5 Reset the Parameter Settings

Use Pr.06-44 to specify the reset method when an STO alarm occurs.

06-44 STO Latch Selection

Default: 0

Settings	0: STO Latch
	1: STO No latch

- Pr.06-44 = 0: STO Alarm Latch. After you clear the cause of the STO Alarm, use a Reset command to clear the STO Alarm.
- Pr.06-44 = 1: STO Alarm no Latch. After you clear the cause of the STO Alarm, the STO Alarm clears automatically.
- All of STL1–STL3 errors are “Alarm Latch” mode (in STL1–STL3 mode, the Pr.06-44 function is not available).

17-6 Timing Diagram Description

The following timing diagrams show the status of relevant signals under different conditions.

17-6-1 Normal operation status

As shown in Figure 17-4, when S1–DCM and S2–DCM is ON (STO function is not required), the drive executes Operating or Output Stop according to RUN command.

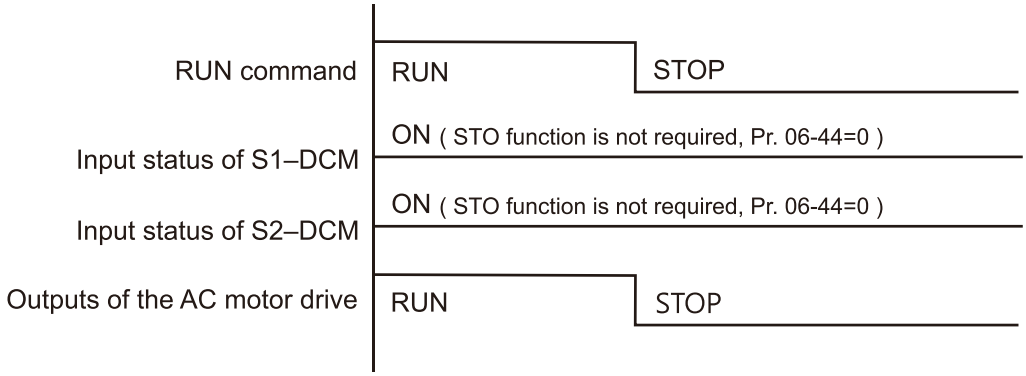

Figure 17-4

17-6-2 STO Status, Pr.06-44 = 0

17-6-2-1 STO, Pr.06-44 = 0, Pr.02-35 = 0

(external operation control selection after reset / reboot, 0 = disable)

As shown in Figure 17-5, when both S1–DCM and S2–DCM are OFF during operation (STO function is required), the drive stops outputting when it enters safe mode regardless of whether the RUN command is in ON or OFF status.

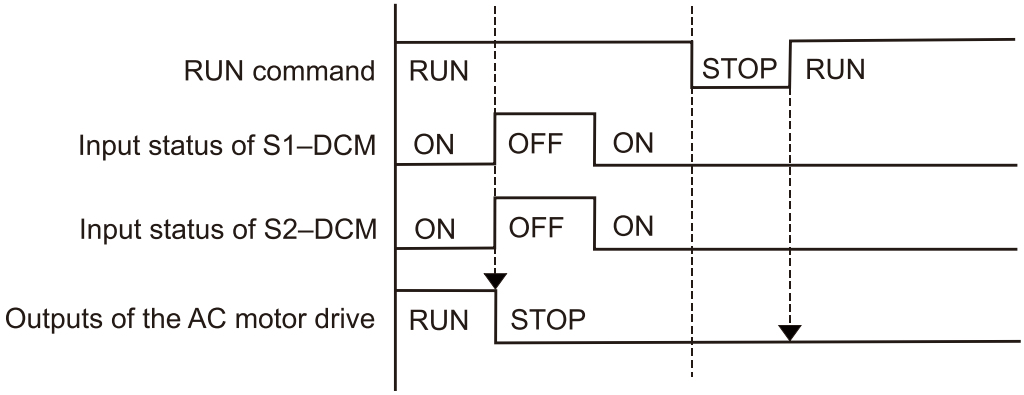

Figure 17-5

17-6-2-2 STO, Pr.06-44 = 0, Pr.02-35 = 1

(external operation control selection after reset / reboot, 1 = drive runs if the RUN command remains after reset or reboot)

As shown in Figure 17-6, the action is the same as in Figure 17-5; however, because Pr.02-35=1, if the RUN command remains after reset, the drive immediately executes the RUN command again.

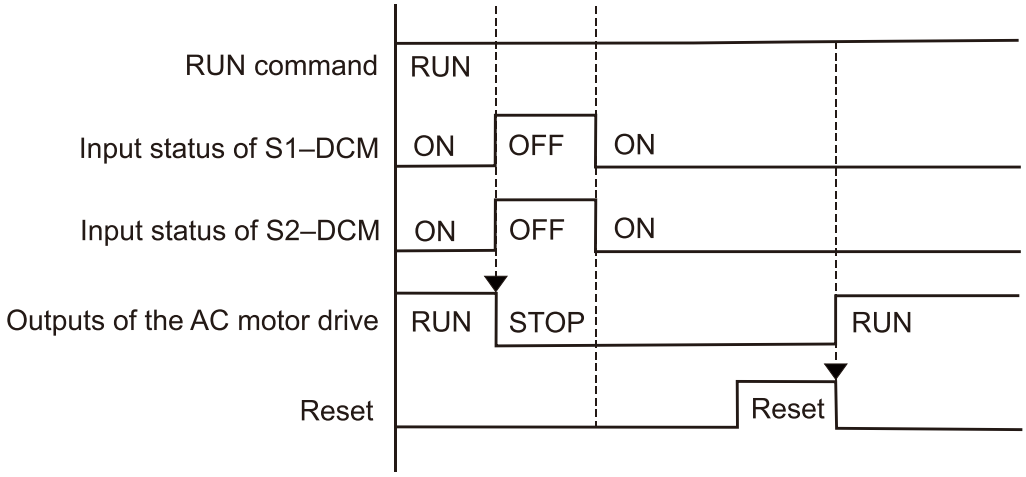

Figure 17-6

17-6-3 STO, Pr.06-44 = 1

As shown in Figure 17-7, when both of S1–DCM and S2–DCM are OFF during operation (STO function is required), the drive stops outputting. When the S1 / S2 status is restored (ON), the STO alarm clears automatically. The drive outputs when the RUN command is executed again.

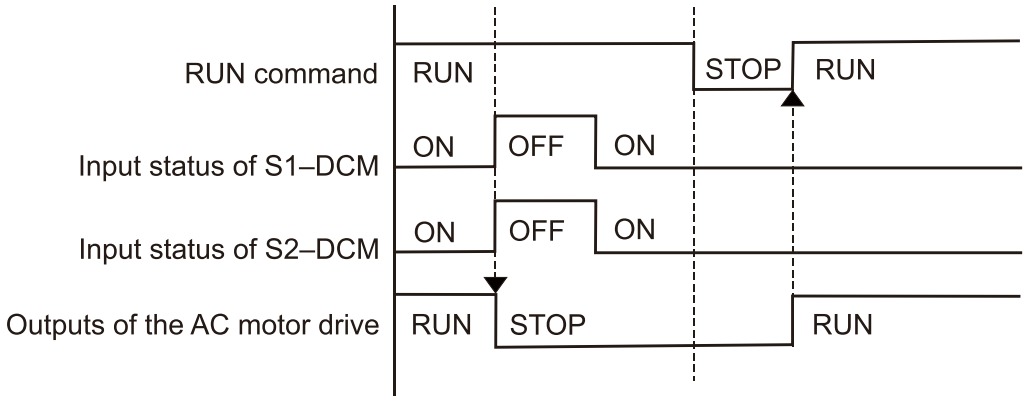

Figure 17-7

17-6-4 STL1, Pr.06-44 = 0 or 1

As shown in Figure 17-8, when S1–DCM is OFF during operation (STO function is required) and S2–DCM is ON (STO function is not required), the drive stops outputting and the keypad shows the STL1 error. However, you cannot reset the STL1 error even if the S1 status is restored (ON) regardless of the parameter setting. You must cycle the power to reset and to restore the drive to the normal standby state.

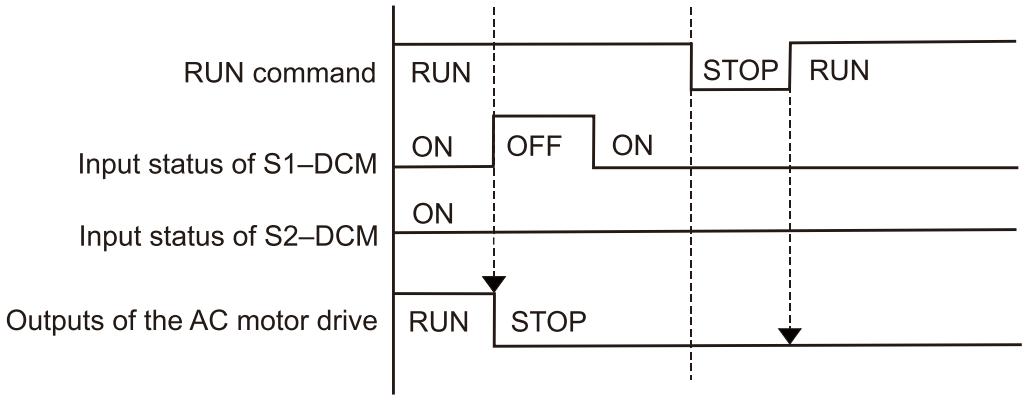

Figure 17-8

17-6-5 STL2, Pr.06-44 = 0 or 1

As shown in Figure 17-9, when S1–DCM is ON during operation (STO function is not required) and S2–DCM is OFF (STO function is required), the drive stops outputting and the keypad shows the STL2 error. However, you cannot reset the STL2 error even if the S2 status is restored (ON) regardless of the parameter setting. You must cycle the power to reset and to restore the drive to the normal standby state.

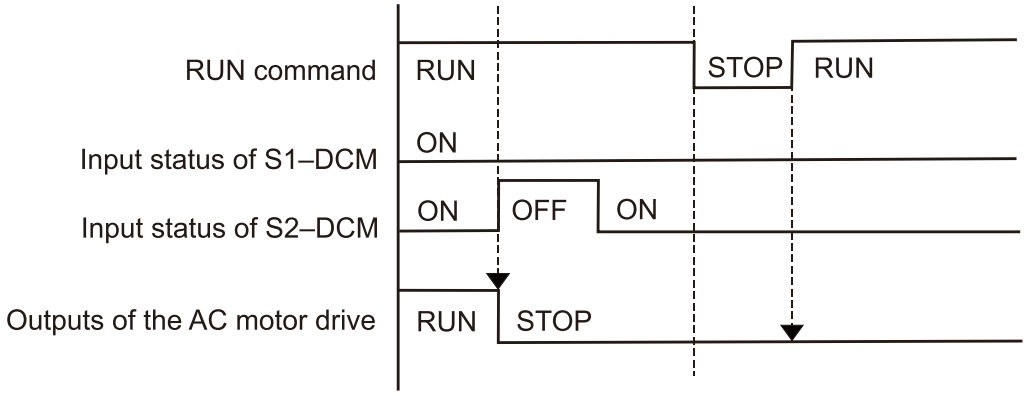

Figure 17-9

17-7 Error Code and Troubleshooting Instructions

17-7-1 Error Code Description

Refer to Pr.06-17–Pr.06-22 for the fault record; the relevant STO error codes are 72 / 76 / 77 / 78.

The definition is described in Table 17-4 below.

06-17	Fault Record 1
06-18	Fault Record 2
06-19	Fault Record 3
06-20	Fault Record 4
06-21	Fault Record 5
06-22	Fault Record 6

Settings

72: S1 internal circuit detection error

76: STO

77: S2 internal circuit detection error

78: Internal circuit detection error

Error code	Name	Description
72 (STL1)	S1 internal circuit detection error	S1–DCM internal loop detection error
76 (STo)	Safe Torque Off	Safe Torque Off function active
77 (STL2)	S2 internal circuit detection error	S2–DCM internal loop detection error
78 (STL3)	Internal circuit detection error	S1–DCM and S2–DCM internal loop detection error

Table 17-4: Error code description

17-7-2 Troubleshooting Instructions

Refer to the following instructions for troubleshooting in Table 17-5 when STO / STL1 / STL2 / STL3 appear on the keypad (refer to Chapter 14 Fault Codes for details).

ID No.	KPMS-LE01 Keypad Display	Descriptions
72	STL1	S1–DCM internal circuit detection error Cause and Corrective Actions ● S1 and DCM short circuit lines are not connected ➔ Re-connect the short circuit line. ● Hardware failure ➔ After you make sure all the wiring is correct, if STL1 fault still exists after cycling the power, return to the factory for repair.
76	STo	Safe Torque Off function active Cause and Corrective Actions ● The switch action of S1 / DCM and S2 / DCM (OPEN) ➔ Reset the switch (ON) and cycle the power.
77	STL2	S2–DCM internal circuit detection error. Cause and Corrective Actions ● S2 and DCM short circuit lines are not connected ➔ Re-connect the short circuit line. ● Hardware failure ➔ After you make sure all the wiring is correct, if STL2 fault still exists after cycling the power, return to the factory for repair.
78	STL3	Internal circuit detection error. Cause and Corrective Actions ● S1 and DCM, or S2 and DCM short circuit lines are not connected ➔ Re-connect the short circuit line. ● Hardware failure ➔ After you make sure all the wiring is correct, if STL3 fault still exists after cycling the power, return to the factory for repair.

Table 17-5 KPMS-LE01 Instrucstions for Troubleshooting

17-8 Test and Fault Confirmation

After wiring the STO circuit in accordance with Section 17-3 Wiring Diagram, follow the steps below to verify that the STO and related detection functions work normally.

1. When the drive is powered on, make sure that the S1–DCM and S2–DCM voltage falls between 11–30 V_{DC}. At this time, the drive should enter Standby mode and wait for RUN command. There is no error displayed on the keypad.
2. Press RUN on the keypad and use the emergency button or other method to make the S1–DCM and S2–DCM voltage fall between 0–5 V_{DC}. At the same time, after the output frequency is reached, the drive should enter Torque Stop mode STO and stop outputting voltage. The keypad displays the STO error, and the response time of the S1 and S2 signals to cause the drive to stop outputting voltage should be ≤ 20 ms. Then restore the S1–DCM and S2–DCM voltage to 11–30 V_{DC}, and press RESET button on the keypad to clear the STO error. The drive should enter Standby mode and wait for RUN command.
3. Press RUN on the keypad and use the emergency button or other method to make the S1–DCM voltage fall between 0–5 V_{DC}, and the S2–DCM voltage remain between 11–30 V_{DC} after the output frequency is reached. At this time, the drive should enter Torque Stop mode STL1 and stop outputting voltage. The keypad displays the STL1 error, and the response time of S1 signals to cause the drive to stop outputting voltage should be ≤ 20 ms. Then restore the S1–DCM voltage to 11–30 V_{DC}. However, pressing RESET button on the keypad cannot clear the STL1 error. You must cycle the power to the drive. Make sure that the S1–DCM and S2–DCM voltage falls between 11–30 V_{DC} and then cycle the power to the drive, then the STL1 error is cleared. The drive should enter Standby mode and wait for RUN command.
4. Press RUN on the keypad and use the emergency button or other method to make the S2–DCM voltage fall between 0–5 V_{DC}, and the S1–DCM voltage remain between 11–30 V_{DC} after the output frequency is reached. At this time, the drive should enter Torque Stop mode STL2 and stop outputting voltage. The keypad displays the STL2 error, and the response time of the S2 signals to cause the drive to stop outputting voltage should be ≤ 20 ms. Then restore the S2–DCM voltage to 11–30 V_{DC}. However, pressing RESET button on the keypad cannot clear the STL2 error. You must cycle the power to the drive. Make sure that the S1–DCM and S2–DCM voltage falls between 11–30 V_{DC} and then cycle the power to the drive, then the STL2 error is cleared. The drive should enter Standby mode and wait for RUN command.
5. If you can conduct these four steps normally in sequence with no other error, then the Safe Torque Off function loop is normal, as shown in Table 17-6 below. However, if a situation that differs from these four steps, or if STL3 occurs, then the Safe Torque Off function loop does not work normally. Refer to Section 17-7 Error Code and Troubleshooting Instructions for details.

Signal	Status			
S1–DCM	ON	ON	OFF	OFF
S2–DCM	ON	OFF	ON	OFF
Drive output	Ready to output	STL2 mode (Torque output off)	STL1 mode (Torque output off)	STO mode (Torque output off)
Error displayed on the keypad	No error displayed	STL2	STL1	STO
Response time	N/A	≤ 20 ms		
RESET mechanism	N/A	Cycle power to the drive	Cycle power to the drive	Press RESET directly

Table 17-6: Action logic and keypad display description

- STO means channel 1 and 2 operate simultaneously and enter Safe Torque Off.
- STL1 means channel 1 operates.
- STL2 means channel 2 operates.
- STL3 means there is an error detected in the internal loop of the channel 1 or channel 2.
- S1–DCM / S2–DCM ON: means S1–DCM / S2–DCM inputs a power supply > 11 V_{DC}.
- S1–DCM / S2–DCM OFF: means S1–DCM / S2–DCM inputs a power supply < 5 V_{DC}.

[This page is intentionally left blank]

Appendix A. Modbus Protocol

A-1 Code Description

A-2 Data Format

A-3 Communication Protocol

A-4 Address List

A-5 Exception Response

- This appendix helps users to control by computers and monitor drive parameters and status through Modbus by using RS-485 serial communication interface
- When using the communication interface, the diagram on the right shows the communication port pin definitions. It is recommended that you connect the AC motor drive to your PC by using Delta IFD6530 or IFD6500 as a communication converter.

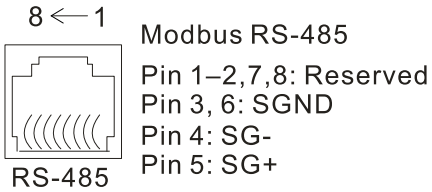

- The default communication formats for communication port:
  1. Modbus ASCII mode
  2. 9600 bps serial communication baud rates
  3. 7-bit data character
  4. No calibration
  5. 2 stop bit
- Modbus ASCII (American Standard Code for Information Interchange): Each byte of data is the combination of two ASCII characters. For example, one byte of data: 64 Hex, shown as ‘64’ in ASCII, consists of ‘6’ (36Hex) and ‘4’ (34Hex)

A-1 Code Description

The communication protocol is in hexadecimal, ASCII: “0”…“9”, “A”…“F”, every hexadecimal value represents an ASCII code. The following table shows some examples.

Character	‘0’	‘1’	‘2’	‘3’	‘4’	‘5’	‘6’	‘7’
ASCII code	30H	31H	32H	33H	34H	35H	36H	37H

Character	‘8’	‘9’	‘A’	‘B’	‘C’	‘D’	‘E’	‘F’
ASCII code	38H	39H	41H	42H	43H	44H	45H	46H

A-2 Data Format

10-bit character frame (For ASCII):

(7, N, 2)

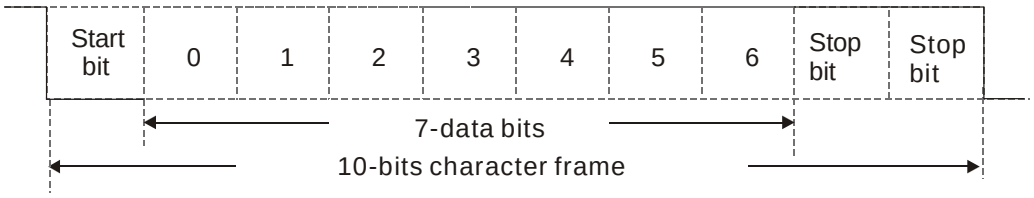

(7, E, 1)

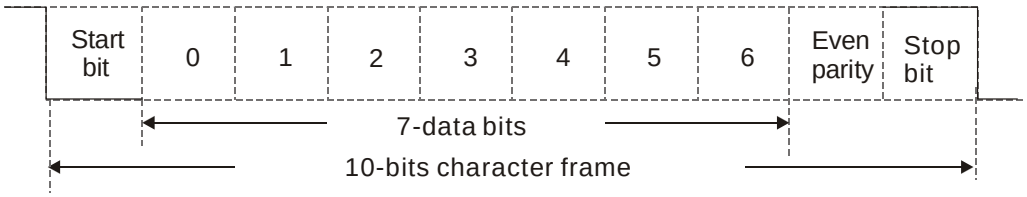

(7, O, 1)

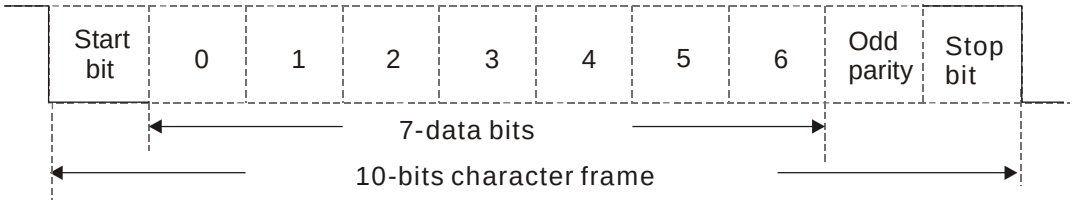

11-bit character frame (For RTU):

(8, N, 2)

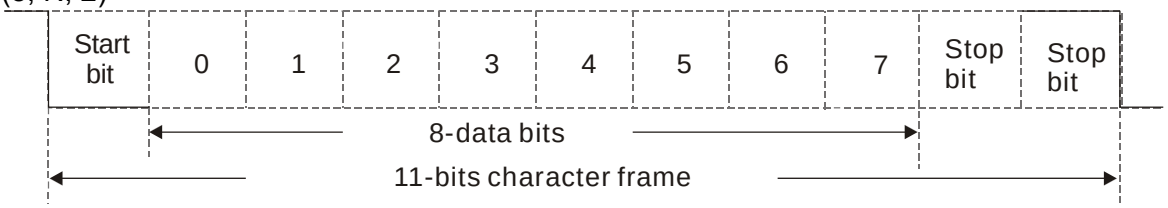

(8, E, 1)

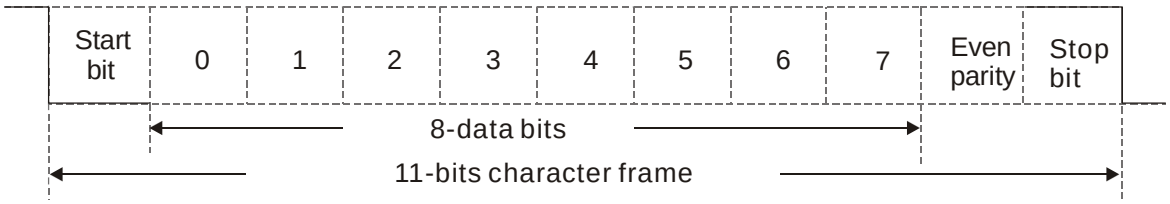

(8, O, 1)

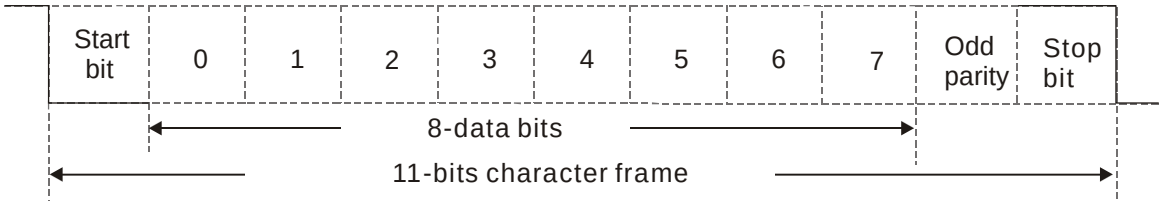

A-3 Communication Protocol

1. Communication data frame

ASCII mode:

STX	Start character = ':' (3AH)
Address High	Communication address:
Address Low	one 8-bit address consists of 2 ASCII codes
Function High	Command code:
Function Low	one 8-bit command consists of 2 ASCII codes
DATA (n-1)	Contents of data:
…….	n x 8-bit data consists of 2n ASCII codes
DATA 0	n ≤ 16, maximum of 32 ASCII codes (20 sets of data)
LRC Check High	LRC checksum:
LRC Check Low	one 8-bit checksum consists of 2 ASCII codes
END High	End characters:
END Low	END1= CR (0DH), END0= LF(0AH)

RTU mode:

START	Defined by a silent interval of larger than / equal to 3.5 char
Address	Communication address: 8-bit binary address
Function	Command code: 8-bit binary command
DATA (n-1)	Contents of data: N × 8-bit data, n ≤ 16
…….	
DATA 0	
CRC Check Low	CRC checksum: one 16-bit CRC checksum consists of 2 8-bit binary characters
CRC Check High	
END	Defined by a silent interval of larger than / equal to 3.5 char

2. Communication address (Address)

   00H: broadcast to all AC motor drives

   01H: AC motor drive of address 01

   0FH: AC motor drive of address 15

   10H: AC motor drive of address 16

   :

   FEH: AC motor drive of address 254

3. Function (function code) and data (data characters)

   03H: read data from a register

   Example: Reading two continuous data from register address 2102H, AMD address is 01H.

ASCII mode:

Command Message

STX	‘:’
Address	‘0’
	‘1’
Function	‘0’
	‘3’
Starting register	‘2’
	‘1’
	‘0’
	‘2’
Number of register (count by word)	‘0’
	‘0’
	‘0’
	‘2’
LRC Check	‘D’
	‘7’
END	CR
	LF

Response Message

STX	‘:’
Address	‘0’
	‘1’
Function	‘0’
	‘3’
Number of register (count by byte)	‘0’
	‘4’
Content of starting register 2102H	‘1’
	‘7’
	‘7’
	‘0’
Content of register 2103H	‘0’
	‘0’
	‘0’
	‘0’
LRC Check	‘7’
	‘1’
END	CR
	LF

RTU mode:

Command Message

Address	01H
Function	03H
Starting data register	21H
	02H
Number of register (count by word)	00H
	02H
CRC Check Low	6FH
CRC Check High	F7H

Response Message

Address	01H
Function	03H
Number of register (count by byte)	04H
Content of register address 2102H	17H
	70H
Content of register address 2103H	00H
	00H
CRC Check Low	FEH
CRC Check High	5CH

4. 06H: single write, write single data to a register.

   Example: Writing data 6000 (1770H) to register 0100H. AMD address is 01H.

ASCII mode:

Command Message

STX	':'
Address	'0'
	'1'
Function	'0'
	'6'
Target register	'0'
	'1'
	'0'
	'0'
Register content	'1'
	'7'
	'7'
	'0'
LRC Check	'7'
	'1'
END	CR
	LF

Response Message

STX	':'
Address	'0'
	'1'
Function	'0'
	'6'
Target register	'0'
	'1'
	'0'
	'0'
Register content	'1'
	'7'
	'7'
	'0'
LRC Check	'7'
	'1'
END	CR
	LF

RTU mode:

Command Message

Address	01H
Function	06H
Target register	01H
	00H
Register content	17H
	70H
CRC Check Low	86H
CRC Check High	22H

Response Message

Address	01H
Function	06H
Target register	01H
	00H
Register content	17H
	70H
CRC Check Low	86H
CRC Check High	22H

5. 10H: write multiple registers (can write at most 20 sets of data simultaneously).
   Example: Set the multi-step speed of an AC motor drive (address is 01H),
   Pr.04-00 = 50.00 (1388H), Pr.04-01 = 40.00 (0FA0H.)

ASCII mode:

Command Message

STX	':'
ADR 1	'0'
ADR 0	'1'
CMD 1	'1'
CMD 0	'0'
Target register	'0'
	'4'
	'0'
	'0'
Number of register (count by word)	'0'
	'0'
	'0'
	'2'
Number of register (count by byte)	'0'
	'4'
The first data content	'1'
	'3'
	'8'
	'8'
The second data content	'0'
	'F'
	'A'
	'0'
LRC Check	'9'
	'B'
END	CR
	LF

Response Message

STX	':'
ADR 1	'0'
ADR 0	'1'
CMD 1	'1'
CMD 0	'0'
Target register	'0'
	'4'
	'0'
	'0'
Number of register (count by word)	'0'
	'0'
	'0'
	'2'
LRC Check	'E'
	'8'
END	CR
	LF

RTU mode:

Command Message

ADR	01H
CMD	10H
Target register	04H
	00H
Number of register (Count by word)	00H
	02H
Quantity of data (byte)	04
The first data content	13H
	88H
The second data content	0FH
	A0H
CRC Check Low	40H
CRC Check High	49H

Response Message

ADR	01H
CMD	10H
Target register	04H
	00H
Number of register (Count by word)	00H
	02H
CRC Check Low	41H
CRC Check High	04H

6. Checks

ASCII mode (LRC Check):

LRC (Longitudinal Redundancy Check) is calculated by summing up the values of the bytes from ADR1 to last data character then calculating the hexadecimal representation of the 2's-complement negation of the sum.

Example:

01H + 03H + 21H + 02H + 00H + 02H = 29H, the 2's-complement negation of 29H is D7H.

RTU mode (CRC Check):

CRC (Cyclical Redundancy Check) is calculated by the following steps:

Step 1: Load a 16-bit register (called CRC register) with FFFFh.

Step 2: Exclusive OR the first 8-bit byte of the command message with the low order byte of the 16-bit CRC register, putting the result in the CRC register.

Step 3: Examine the LSB of CRC register.

Step 4: If the LSB of CRC register is 0, shift the CRC register one bit to the right, fill MSB with zero, then repeat step 3. If the LSB of CRC register is 1, shift the CRC register one bit to the right, fill MSB with zero, Exclusive OR the CRC register with the polynomial value A001H, then repeat step 3.

Step 5: Repeat step 3 and 4 until you perform eight shifts. This processes a complete 8-bit byte.

Step 6: Repeat step 2 through 5 for the next 8-bit byte of the command message. Continue doing this until all bytes are processed. The final contents of the CRC register are the CRC value. When transmitting the CRC value in the message, the upper and lower bytes of the CRC value must be swapped, that is, the lower order byte is transmitted first.

7. The following is an example of CRC generation using C language.

Unsigned char* data ← a pointer to the message buffer

Unsigned char length ← the quantity of bytes in the message buffer

```
unsigned int crc_chk(unsigned char* data, unsigned char length)
    {
        int j;
        unsigned int reg_crc=0xffff;
        while(length--){
            reg_crc ^= *data++;
            for(j=0;j<8;j++){
                if(reg_crc & 0x01){   /* LSB(b0)=1 */
                    reg_crc=(reg_crc>>1) ^ 0xa001;
                }else{
                    reg_crc=reg_crc >>1;
                }
            }
        }
        return reg_crc;                    // return register CRC
    }
```

A-4 Address List

1. ASC
   (1) Reads one or more parameter values: 3Ah (start bit‘ : ’) + 30h 31h (station address 01) + 30h 33h (function code 03h) + 30h 30h xxh xxh–32h 36h xxh xxh (Modbus address 00xxh–26xxh) + xxh xxh xxh xxh (reading length 1) + LRC (checksum) + CR/LF
   (2) Writes one parameter value: 3Ah (start bit‘ : ’) + 30h 31h (station address 01) + 30h 36h (function code 06h) + 30h 30h xxh xxh–32h 36h xxh xxh(Modbus address 00xxh–26xxh) + xxh xxh xxh xxh (writing value) + LRC (checksum) + CR/LF
   (3) Writes 20 parameter values: 3Ah (start bit‘ : ’) + 30h 31h (station address 01) + 31h 30h (function code 10h) + 30h 30h xxh xxh–32h 36h xxh xxh (Modbus address 00xxh–26xxh) + 30h 30h 31h 34h (word data length) + 30h 30h 32h 38h(byte data length) + xxh xxh xxh xxh (the first writing value) + ... + xxh xxh xxh xxh (the 20th writing value) + LRC (checksum) + CR/LF
2. TU
   (1) Reads one or more parameter values: 01h (station address 01) + 03h (function code 03h) + 00xxh–26xxh (Modbus address) + xxxxh (reading length) + CRC (checksum)
   (2) Writes one parameter value: 01h (station address 01) + 06h (function code 06h) + 00xxh–26xxh (Modbus address) + xxxxh (writing value) + CRC (checksum)
   (3) Writes 20 parameter values: 01h (station address 01) + 10h (function code 10h) + 00xxh–26xxh (Modbus address) + 0014h (data length, count by word) + 0028h (data length, count by byte) + xxxxh (the first writing value) + ... + xxxxh (the 20th writing value) + CRC (checksum)

3. AC motor drive parameters (GGnnH): communication station address is Pr.09-00 setting value

Modbus Address	Attribute (Function Code)	Description
GGnnH	R(03H) / W(06H, 10H)	GG means parameter group, nn means parameter number. For example, the Modbus address of Pr.04-10 is 040AH when reading by Delta VFDsoft.

4. Control command (20xx): communication station address is Pr.09-00 setting value

Function Name	Modbus Address	Attribute (Function Code)	Size	Description		
Operation command	2000H	R (03H) / W (06H, 10H)	U16	bit1–0	00B: No function	1. Remains the status specified by a first command until a second command is received. 2. Valid only when operation command source is set to communication (Pr.00-03=2).
					01B: Stop	
					10B: Run	
					11B: JOG + Run	
				bit3–2	Reserved	
				bit5–4	00B: No function	
					01B: FWD	
					10B: REV	
					11B: Change direction	
				bit7–6	00B: 1st accel. / decel.	1. Valid only when 2000h bit12 is set to 1. 2. Obtain the current running speed by
					01B: 2nd accel. / decel.	
					10B: 3rd accel. / decel.	
					11B: 4th accel. / decel.	

Function Name	Modbus Address	Attribute (Function Code)	Size	Description		
			U16	bit11–8	0000B: zero step speed	reading 2107h.
					0001B: 1st step speed	
					0010B: 2nd step speed	
					0011B: 3rd step speed	
					0100B: 4th step speed	
					0101B: 5th step speed	
					0110B: 6th step speed	
					0111B: 7th step speed	
					1000B: 8th step speed	
					1001B: 9th step speed	
					1010B: 10th step speed	
					1011B: 11th step speed	
					1100B: 12th step speed	
					1101B: 13th step speed	
					1110B: 14th step speed	
					1111B: 15th step speed	
				bit12	1: Enable bit06–11 function	
				bit15	Reserved	
Frequency command	2001H	R (03H) / W (06H, 10H)		Frequency command (XXX.XX Hz). There are two decimal places for general-purpose drives.		
Fault / control command source	2002H	R (03H) / W (06H, 10H)		bit0	1: External Fault (E.F.) ON	To trigger an external fault to the drive to make it stop running. Drive's stop method can be set through drive parameters.
				bit1	1: Reset	To clear the fault status
				bit2	1: Base block (B.B) ON	To trigger an external base block to the drive to suspend the operation. When bit = 0 and clear BB situation, the drive returns to the previous operation.
				bit5	1: Fire mode ON	To prevent the drive from shutting down due to its own protection, and to maintain the important fan operation without controlling by any control signal or alarm.
				bit15–3	Reserved	

5. Status monitor read only (21xx): communication station address is Pr.09-00 setting value

Function Name	Modbus Address	Attribute (Function Code)	Size	Description	
Fault status	2100H	R(03H)	U16	bit7–0: Fault code bit15–8: Warning code	
Drive operation status	2101H	R(03H)	U16	bit1–0	Status of RUN / STOP 00B: Drive fully stops (RUN indicator is OFF / STOP indicator is ON) 01B: Drive is stopping (RUN indicator flashes / STOP indicator is ON) 10B: Drive is in standby status (RUN indicator is ON / STOP indicator flashes) 11B: Drive is running (RUN indicator is ON / STOP indicator is OFF)
				bit2	1: JOG command
				bit4–3	Operation direction 00B: FWD (REV indicator is OFF / FWD indicator is ON) 01B: from REV to FWD (REV indicator flashes / FWD indicator is ON) 10B: from FWD to REV (REV indicator is ON / FWD indicator flashes) 11B: REV (REV indicator is ON / FWD indicator is OFF)
				bit8	1: Master frequency controlled by communication interface
				bit9	1: Master frequency controlled by analog / external terminal signal
				bit10	1: Operation command controlled by communication interface
				bit11	1: Parameter locked
				bit12	Reserved
Frequency command	2102H	R(03H)		Drive's frequency command (XXX.XX Hz) 1: Speed mode→Speed command 2: Torque mode→Speed limit	
Output frequency	2103H	R(03H)		Drive's output frequency (XXX.XX Hz)	
Output current	2104H	R(03H)		Drive's output current (XX.XX A). Decimal places can be referred by the high byte of 211F	
DC bus voltage	2105H	R(03H)		Drive's DC bus voltage (XXX.X V)	
Output voltage	2106H	R(03H)		Drive's output voltage (XXX.X V)	

Function Name	Modbus Address	Attribute (Function Code)	Size	Description
Multi-step speed status	2107H	R(03H)	U16	Drive's current running speed step given by multi-step speed command (0 is main speed)
Counter value	2109H	R(03H)		The present value of MI
Output power factor angle	210AH	R(03H)		Drive's output power factor angle (XXX.X°) (0.0–180.0°)
Output torque	210BH	R(03H)		Output torque (XXX.X %)
Motor actual speed	210CH	R(03H)		Actual motor speed (XXXXX rpm)
Power output	210FH	R(03H)		Drive's output power (XXXX.X kW)
Multi-function display	2116H	R(03H)		Display the low word value (Pr.00-04) of user-defined items, the value is low 16 bits data.
Maximum user-defined value	211BH	R(03H)		Maximum Operation Frequency (Pr.01-00) or Maximum User-defined Value (Pr.00-26) ● When Pr.00-26 is 0, this value is equal to Pr.01-00 setting ● When Pr.00-26 is not 0, and the command source is keypad, this value = Pr.00-24 × Pr.00-26 / Pr.01-00 ● When Pr.00-26 is not 0, and the command source is 485, this value = Pr.09-10 × Pr.00-26 / Pr.01-00
Output current digit	211FH	R(03H)		High byte: Current digit (display)

6. Status monitor read only (22xx): communication station address is Pr.09-00 setting value

Function Name	Modbus Address	Attribute (Function Code)	Size	Description
Output current	2200H	R(03H)	U16	Display output current (A). When current is higher than 655.35, it shifts the decimal as (XXX.X A). The decimal can refer to High byte of 211F.
Counter value	2201H	R(03H)		Display counter value (c)
Output frequency	2202H	R(03H)		Actual output frequency (XXXXX Hz)
DC bus voltage	2203H	R(03H)		DC bus voltage (XXX.X V)
Output voltage	2204H	R(03H)		Output voltage (XXX.X V)
Power factor angle	2205H	R(03H)		Power angle (XXX.X)
Power output	2206H	R(03H)		Display actual motor speed kW of U, V, W (XXXX.X kW)
Motor actual speed	2207H	R(03H)		Display motor speed in rpm estimated by the drive or encoder feedback (XXXXX rpm)
Output torque	2208H	R(03H)		Display positive/negative output torque in %, estimated by the drive (t0.0: positive torque, -0.0: negative torque) (XXX.X %)
PID feedback value	220AH	R(03H)		PID feedback value after enabling PID function (XXX.XX %)
AVI analog input	220BH	R(03H)		Display signal of AVI analog input terminal, 0–10 V corresponds to 0.00–100.00% (1.) (see NOTE 2 in Pr.00-04)
ACI analog input	220CH	R(03H)		Display signal of ACI analog input terminal, 4–20 mA / 0–10 V corresponds to 0.00–100.00% (2.) (see NOTE 2 in Pr.00-04)
IGBT temperature	220EH	R(03H)		IGBT temperature of drive power module (XXX.XºC)
Digital input status	2210H	R(03H)		The status of digital input (ON/OFF), refer to Pr.02-12 (see NOTE 3 in Pr.00-04)
Digital output status	2211H	R(03H)		The status of digital output (ON/OFF), refer to Pr.02-18 (see NOTE 4 in Pr.00-04)
Multi-step speed	2212H	R(03H)		The multi-step speed that is executing (S)
The co-rresponding CPU pin status of digital input	2213H	R(03H)		The corresponding CPU pin status of digital input (d.) (see NOTE 3 in Pr.00-04)
The co-rresponding CPU pin status of digital output	2214H	R(03H)		The corresponding CPU pin status of digital output (O.) (see NOTE 4 in Pr.00-04)
Pulse input frequency	2216H	R(03H)		Pulse input frequency (PG2 of PG card) (XXX.XX Hz)
Overload counter	2219H	R(03H)		Display times of counter overload (XXX.XX %)
GFF	221AH	R(03H)		GFF (XXX.XX%)
DC bus voltage ripples	221BH	R(03H)		DCBUS voltage ripples (XXX.X V)
PLC register	221CH	R(03H)		PLC register D1043 data (C)
Magnetic pole zone	221DH	R(03H)		Number of poles of a permanent magnet motor
Display of user-defined output	221EH	R(03H)		User page displays the value in physical measure
Pr.00-05 gain value	221FH	R(03H)		Output Value of Pr.00-05 (XXX.XX Hz)
Control mode	2223H	R(03H)		Control mode of the drive 0: speed control mode 1: torque control mode

Function Name	Modbus Address	Attribute (Function Code)	Size	Description	
Frequency of carrier wave	2224H	R(03H)		Carrier frequency of the drive (XX kHz)	
Drive status	2226H	R(03H)		Drive status	
				bit1–0	00b: No direction 01b: Forward 10b: Reverse
				bit3–2	01b: Drive ready 10b: Error
				bit4	0b: Motor drive did not output 1b: Motor drive did output
				bit5	0b: No alarm 1b: Alarm
Positive / negative torque	2227H	R(03H)		Drive's estimated output torque (positive or negative direction) (XXXX Nt-m)	
Torque command	2228H	R(03H)		Torque command (XXX.X%)	
kWh	2229H	R(03H)		kWh display (XXXX.X)	
PID reference	222EH	R(03H)		PID reference (XXX.XX%)	
PID offset	222FH	R(03H)		PID offset (XXX.XX%)	
PID output frequency	2230H	R(03H)		PID output frequency (XXX.XX Hz)	
Auxiliary frequency	2232H	R(03H)		Display the auxiliary frequency value	
Master frequency	2233H	R(03H)		Display the master frequency value	
Frequency value after addition and subtraction of master and auxiliary frequency	2234H	R(03H)	U16	Display the frequency value after addition and subtraction of master and auxiliary frequency	

A-5 Exception Response

When the drive is using the communication connection, if an error occurs, the drive responds to the error code and sets the highest bit (bit 7) of the command code to 1 (function code AND 80H) then responds to the control system to signal that an error occurred.

If the keypad displays “CE-XX” as a warning message, “XX” is the error code at that time. Refer to the table of error codes for communication error for reference.

ASCII mode

STX	‘:’
Address	‘0’
	‘1’
Function	‘8’
	‘6’
Exception code	‘0’
	‘2’
LRC Check	‘7’
	‘7’
END	CR
	LF

RTU mode

Address	01H
Function	86H
Exception code	02H
CRC Check Low	C3H
CRC Check High	A1H

The explanation of exception codes:

Error code	Explanation
1	Function code is not supported or unrecognized.
2	Address is not supported or unrecognized.
3	Data is not correct or unrecognized.
4	Failure to execute this function code

Appendix B. Revision History

New Information	
Description	Related Part
Add plate-mounting models and related information.	Chapter 1, 2, 3, 5, 7, 9
Add control terminal specifications wiring precautions information.	Chapter 6
Add information on the installation distance of brake units.	Chapter 7
Add Communication Card-PROFINET: CMM-PN02.	Chapter 8
New parameters: ● Parameter group 02: 02-32, 02-33, 02-55, 02-57	Chapter 11 Section 12-1

Updated Information	
Description	Related Part
Correct mistakes.	All manual
Update wiring specifications of control terminal.	Chapter 6
Update THDi specification of AC/DC reactors and digital keypad-KPC-CC01 information.	Chapter 7
Update parameter settings and descriptions: ● Parameter group 00: 00-20, 00-21, 00-30, 00-31 ● Parameter group 02: 02-12, 02-13, 02-16, 02-17, 02-18, 02-34, 02-58 ● Parameter group 06: 06-14, 06-28, 06-59 ● Parameter group 08: 08-23 ● Parameter group 09: 09-00–09-04, 09-60	Chapter 11 Section 12-1
Update warning code No.19 Phase loss (PHL) information.	Chapter 13
Update the Summary of Fault Codes table.	Chapter 14
Update Modbus communication protocol information. Update Modbus Protocol table.	Appendix A

Smarter. Greener. Together.

Industrial Automation Headquarters

Delta Electronics, Inc.
Taoyuan Technology Center
No.18, Xinglong Rd., Taoyuan District,
Taoyuan City 330477, Taiwan
TEL: +886-3-362-6301 / FAX: +886-3-371-6301

Asia

Delta Electronics (Shanghai) Co., Ltd.
No.182 Minyu Rd., Pudong Shanghai, P.R.C.
Post code : 201209
TEL: +86-21-6872-3988 / FAX: +86-21-6872-3996
Customer Service: 400-820-9595

Delta Electronics (Japan), Inc.
Industrial Automation Sales Department
2-1-14 Shibadaimon, Minato-ku
Tokyo, Japan 105-0012
TEL: +81-3-5733-1155 / FAX: +81-3-5733-1255

Delta Electronics (Korea), Inc.
1511, 219, Gasan Digital 1-Ro., Geumcheon-gu,
Seoul, 08501 South Korea
TEL: +82-2-515-5305 / FAX: +82-2-515-5302

Delta Energy Systems (Singapore) Pte Ltd.
4 Kaki Bukit Avenue 1, #05-04, Singapore 417939
TEL: +65-6747-5155 / FAX: +65-6744-9228

Delta Electronics (India) Pvt. Ltd.
Plot No.43, Sector 35, HSIIDC Gurgaon,
PIN 122001, Haryana, India
TEL: +91-124-4874900 / FAX: +91-124-4874945

Delta Electronics (Thailand) PCL.
909 Soi 9, Moo 4, Bangpoo Industrial Estate (E.P.Z),
Pattana 1 Rd., T.Phraksa, A.Muang,
Samutprakarn 10280, Thailand
TEL: +66-2709-2800 / FAX: +66-2709-2827

Delta Electronics (Australia) Pty Ltd.
Unit 2, Building A, 18-24 Ricketts Road,
Mount Waverley, Victoria 3149 Australia
Mail: IA.au@deltaww.com
TEL: +61-1300-335-823 / +61-3-9543-3720

Americas

Delta Electronics (Americas) Ltd.
5101 Davis Drive, Research Triangle Park, NC 27709, U.S.A.
TEL: +1-919-767-3813

Delta Electronics Brazil Ltd.
Estrada Velha Rio-São Paulo, 5300 Eugênio de
Melo - São José dos Campos CEP: 12247-004 - SP - Brazil
TEL: +55-12-3932-2300 / FAX: +55-12-3932-237

Delta Electronics International Mexico S.A. de C.V.
Gustavo Baz No. 309 Edificio E PB 103
Colonia La Loma, CP 54060
Tlalnepantla, Estado de México
TEL: +52-55-3603-9200

EMEA

Delta Electronics (Netherlands) B.V.
Sales: Sales.IA.EMEA@deltaww.com
Marketing: Marketing.IA.EMEA@deltaww.com
Technical Support: iatechnicalsupport@deltaww.com
Customer Support: Customer-Support@deltaww.com
Service: Service.IA.emea@deltaww.com
TEL: +31(0)40 800 3900

Delta Electronics (Netherlands) B.V.
Automotive Campus 260, 5708 JZ Helmond, The Netherlands
Mail: Sales.IA.Benelux@deltaww.com
TEL: +31(0)40 800 3900

Delta Electronics (Netherlands) B.V.
Coesterweg 45, D-59494 Soest, Germany
Mail: Sales.IA.DACH@deltaww.com
TEL: +49 2921 987 238

Delta Electronics (France) S.A.
ZI du bois Challand 2, 15 rue des Pyrénées,
Lisses, 91090 Evry Cedex, France
Mail: Sales.IA.FR@deltaww.com
TEL: +33(0)1 69 77 82 60

Delta Electronics Solutions (Spain) S.L.U
Ctra. De Villaverde a Vallecas, 265 1º Dcha Ed.
Hormigueras – P.I. de Vallecas 28031 Madrid
TEL: +34(0)91 223 74 20

Carrer Llacuna 166, 08018 Barcelona, Spain
Mail: Sales.IA.Iberia@deltaww.com

Delta Electronics (Italy) S.r.l.
Via Meda 2–22060 Novedrate(CO)
Piazza Grazioli 18 00186 Roma Italy
Mail: Sales.IA.Italy@deltaww.com
TEL: +39 039 8900365

Delta Greentech Elektronik San. Ltd. Sti. (Turkey)
Şerifali Mah. Hendem Cad. Kule Sok. No:16-A
34775 Ümraniye – İstanbul
Mail: Sales.IA.Turkey@deltaww.com
TEL: + 90 216 499 9910

Eltek Dubai (Eltek MEA DMCC)
OFFICE 2504, 25th Floor, Saba Tower 1,
Jumeirah Lakes Towers, Dubai, UAE
Mail: Sales.IA.MEA@deltaww.com
TEL: +971(0)4 2690148

*We reserve the right to change the information in this manual without prior notice.

2024/04/30