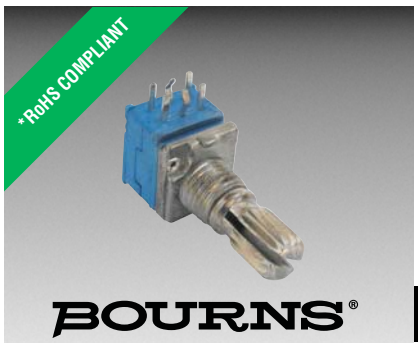

Features

- Carbon element
- Ganging up to 8 sections available
- Knurled and flatted shaft styles
- Audio taper option
- Tracking error within 3 dB
- RoHS compliant*

PTD90 Series - 9 mm Multi-Ganged Potentiometer

Electrical Characteristics

Standard Resistance Range
.....1 K ohms to 1 M ohms
Total Resistance Tolerance
.....±10 % or ±20 %
Standard Tapers .....Linear & audio
Maximum Operating Voltage
..... 150 VAC, 20 VDC
Rated Power
Linear Taper .....0.05 watts
Audio Taper.....0.025 watts
Noise ..... 100 mV max.
Insulation Resistance @ 250 VDC
..... 100 M ohms
Dielectric Withstanding Voltage
.....300 VAC
End Resistance .....20 ohms max.
Tracking Error (-40 dB to 0 dB).....±3 dB

Environmental Characteristics

Operating Temperature
.....-10 °C to +50 °C
Rotational Life ..... 15,000 cycles
IP Rating..... IP 40

Mechanical Characteristics

Mechanical Angle.....300 ° ±10 °
Running Torque .....10 to 250 g-cm
Stop Strength ..... 4.0 kg-cm
Shaft Push/Pull Strength .....5.0 kgf min.
Shaft Wobble.....0.6 x L/20 mm p-p max.
Mounting Torque ..... 7.0 kg-cm min.
Soldering Condition
Manual Soldering
.....96.5 Sn/3.0 Ag/0.5 Cu solid wire
or no-clean rosin cored wire
270 °C max. for 3 seconds
Wave Soldering
.....96.5 Sn/3.0 Ag/0.5 Cu solder
with no-clean flux
260 °C max. for 5 seconds
Wash Process..... Not recommended
Mounting Hardware..... One flat washer
and one mounting nut supplied
per potentiometer

Product Dimensions

PTD901

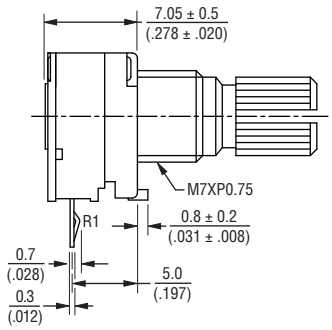

RECOMMENDED PCB LAYOUT

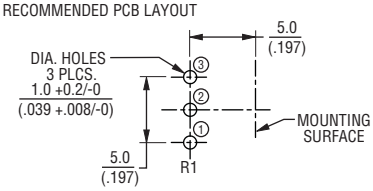

SCHEMATIC

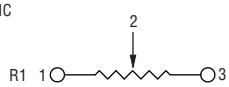

DIMENSIONS: MM (INCHES)

PTD902

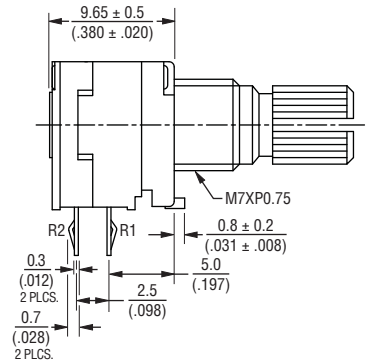

RECOMMENDED PCB LAYOUT

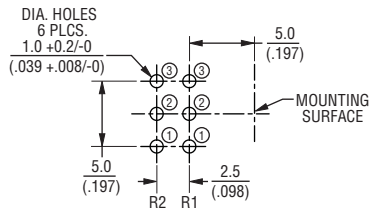

SCHEMATIC

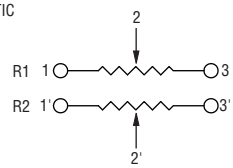

Derating Curve

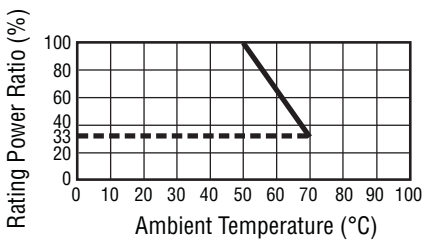

Standard Resistance Table

Resistance (Ohms)	Resistance Code
1,000	102
2,000	202
5,000	502
10,000	103
20,000	203
50,000	503
100,000	104
200,000	204
500,000	504
1,000,000	105

*RoHS Directive 2002/95/EC Jan. 27, 2003 including annex and RoHS Recast 2011/65/EU June 8, 2011.
Specifications are subject to change without notice.
The device characteristics and parameters in this data sheet can and do vary in different applications and actual device performance may vary over time.
Users should verify actual device performance in their specific applications.

sales@prom-elec.com / ООО ПРОМЭЛЕКТРОНИКА

Applications

- Audio/TV sets
- Automotive sound systems
- Amplifiers/mixers/drum machines/synthesizers/DJ equipment
- Multimedia sound systems
- Portable electronics

PTD90 Series - 9 mm Multi-Ganged Potentiometer

BOURNS®

Product Dimensions

PTD904

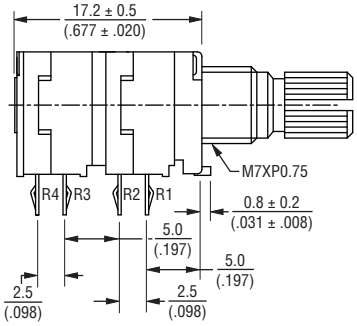

RECOMMENDED PCB LAYOUT

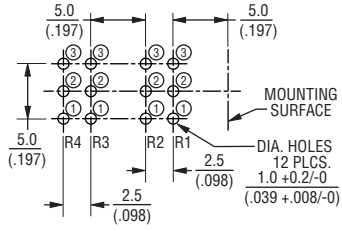

SCHEMATIC

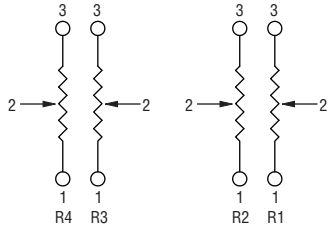

PTD906

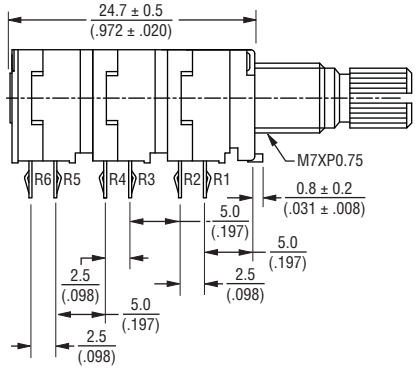

RECOMMENDED PCB LAYOUT

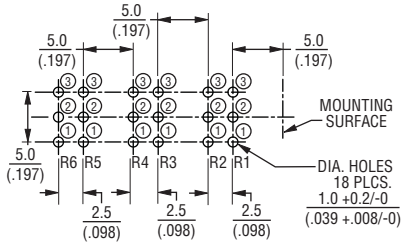

SCHEMATIC

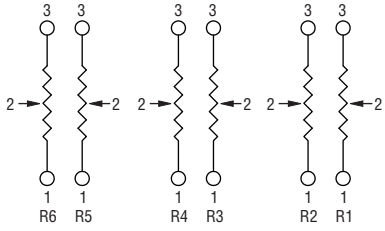

DIMENSIONS: MM (INCHES)

PTD908

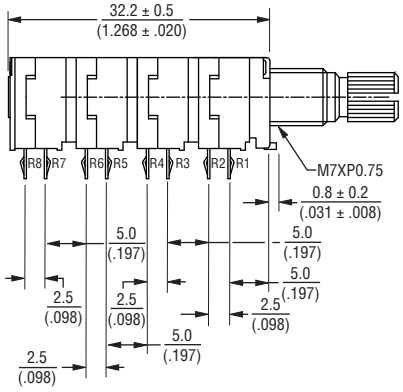

RECOMMENDED PCB LAYOUT

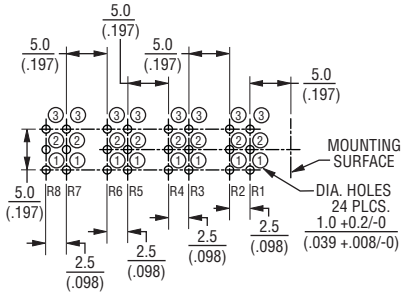

SCHEMATIC

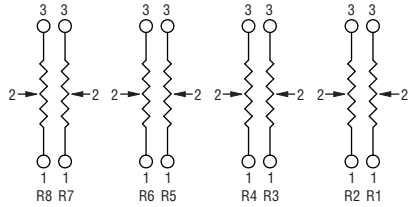

Specifications are subject to change without notice.
The device characteristics and parameters in this data sheet can and do vary in different applications and actual device performance may vary over time.
Users should verify actual device performance in their specific applications.

PTD90 Series - 9 mm Multi-Ganged Potentiometer

BOURNS®

Product Dimensions

SHAFT STYLE "K"

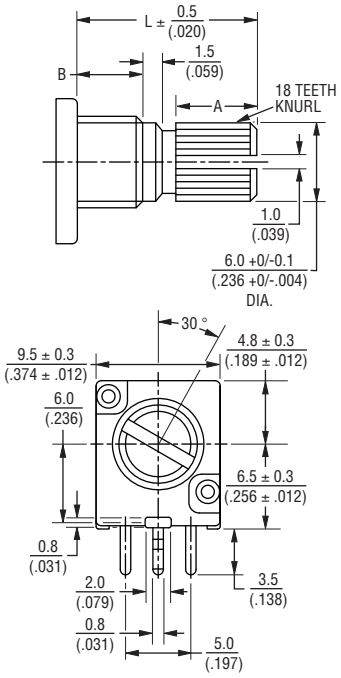

SHAFT SHOWN IN CCW POSITION

L	15 (.591)	20 (.787)	25 (.984)
B	5 (.197)	7 (.276)	10 (.394)
A	6 (.236)	10 (.394)	12 (.472)

DIMENSIONS: MM (INCHES)

SHAFT STYLE "F"

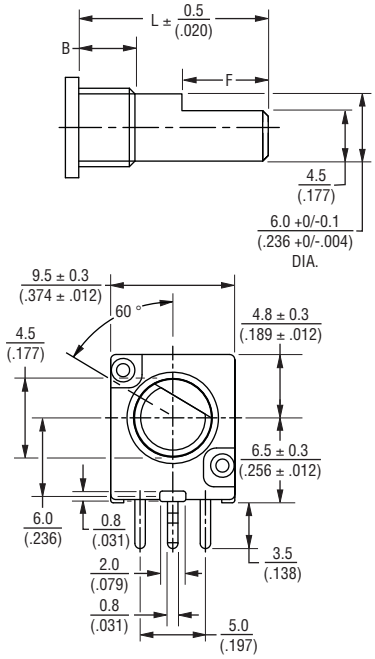

SHAFT SHOWN IN CCW POSITION

L	15 (.591)	20 (.787)	25 (.984)
B	5 (.197)	7 (.276)	10 (.394)
F	7 (.276)	12 (.472)	12 (.472)

How To Order

PTD90 1 - 2 0 20 K - B 203

Model
- PTD90 = No Switch

No. of Sections
- 1 = 1 Section
- 2 = 2 Sections
- 3 = 3 Sections
- 4 = 4 Sections
- 5 = 5 Sections
- 6 = 6 Sections
- 8 = 8 Sections

Pin Style
- 1 = PC Pins vertical/ down facing and ±10 % Total Resistance Tolerance
- 2 = PC Pins vertical/ down facing and ±20 % Total Resistance Tolerance

Center Detent Option
- 0 = No Detent
- 2 = Center Detent

Standard Shaft Length
- 15 = 15 mm
- 20 = 20 mm
- 25 = 25 mm

Shaft Styles
- K = Knurled Type Shaft (Metal) 18 Toothed Serration Type
- F = Flatted Metal Shaft

Resistance Taper (See Taper Charts)
Taper Series followed by Curve Number

Resistance Code (See Table)

Other shaft styles available.

Tapers

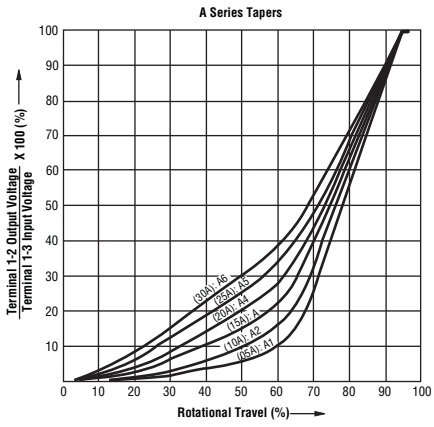

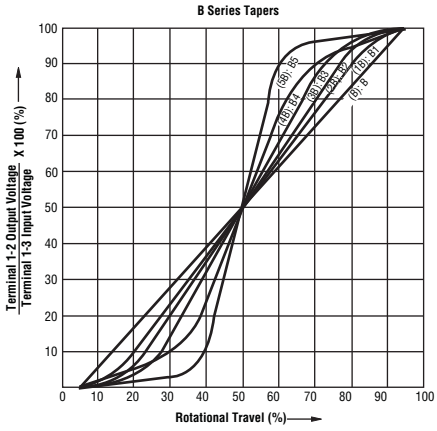

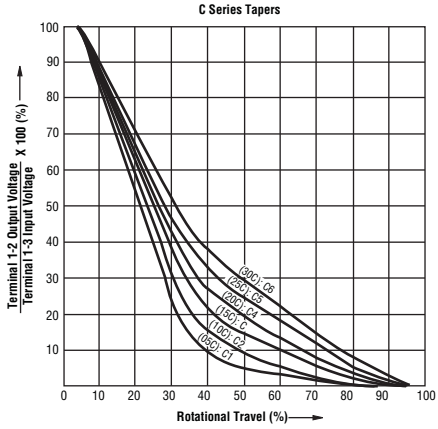

REV. 12/14

Specifications are subject to change without notice.
The device characteristics and parameters in this data sheet can and do vary in different applications and actual device performance may vary over time.
Users should verify actual device performance in their specific applications.