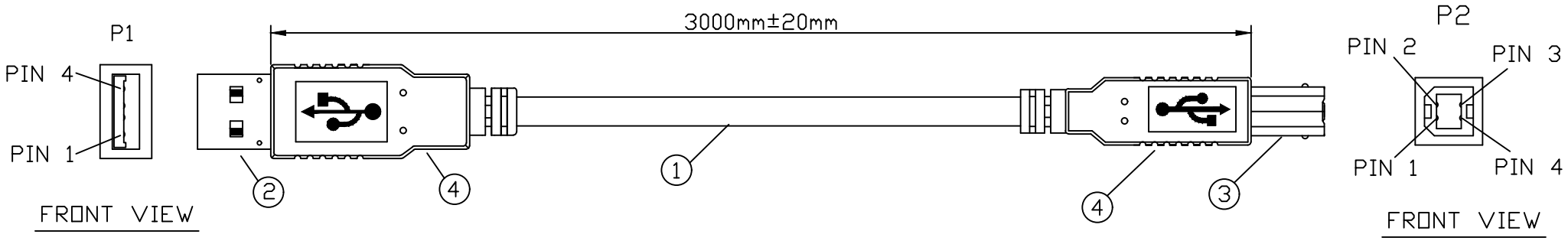

1.CABLE:UL2725,28AWG(7/0.12mm)x1PAIRS
+24AWG(7/0.2mm)x2C,TIN COPPER
INSULATOR:P.P FOR 28AWG&PVC 24AWG
SHIELD:AL-FOIL+DRAIN WIRE+BRAID
JACKET:PVC,COLOR:GREY,O.D:4.8mm±0.2mm
2.CONNECTOR:1 PCS USB A SOLDER TYPE MALE
SHELL:GOLD PLATED
3.CONNECTOR:1 PCS USB B SOLDER TYPE MALE
SHELL:GOLD PLATED
4.HOOD:MOULDED GREY COLOR
5.Fulfill ROHS Guideline
6.ELECTRONIC TEST:100% OPEN SHORT+MISS WIRE TEST

WIRE LIST

P1		P2	
USB A MALE(GOLD)	WIRE COLOR	USB B MALE(GOLD)	AWG
1	RED	1	24AWG
2	WHITE	2	1 PAIRS (28AWG)
3	GREEN	3	
4	BLACK	4	24AWG
SHELL	DRAIN	SHELL	

PART NO	CAB-USBAB3G GY	SHEET NO	1
TITLE:USB A MALE TO USB B MALE L:3.0M,GOLD PLATED UL2725 CABLE GREY COLOR			
DWN NO	D-CAB-USBAB-3G GY		

THIRD ANGLE PROJECTION

SCALE	N.T.S	DRAWN BY & DATE	
SIZE	A4	CHECKED BY & DATE	
UNIT			
☑ mm ☐ INCH		APPROVED BY & DATE	

有得限望公股司份 NEWMAN, HOPE & CO.INC
TEL:886-2-28765517,FAX:886-2-28765527
E-MAIL: sales@newmanhope.com.tw

sales@prom-elec.com / ООО ПРОМЭЛЕКТРОНИКА