ProLight Opto Technology Corporation

RoHS | Pb Free | IR Reflow

ProLight PS2P-TFPE-FMR9
0.2W Power LED
Technical Datasheet
Version: 1.2

ProLight Opto ® PS2P Series

Features

- ·High Color rendering index
- ·Good color uniformity
- ·Industry's first lighting-class LED
- ·Low Voltage DC operated
- ·Instant light (less than 100ns)
- ·No UV

Main Applications

- ·The perfect light color for the meat counter
- ·T8/T5 tube
- ·LED bulb
- ·Indoor/Outdoor Commercial and Residential Architectural

Introduction

·PS2P qualifies as the JEDEC Level 1 MSL sensitivity level and suitable for SMD process, Pb_free reflow soldering capability, and full compliance with EU Reduction of Hazardous Substances (RoHS) legislation.

No. 89, Xiyuan Rd., Zhongli City, Taoyuan County 320,
Taiwan (R.O.C.)
Tel ：+886-3-461-8618
Fax ：+886-3-461-8677
www.prolightopto.com

2016/10
DS-0301

We Provide the Light to the world

sales@prom-elec.com / ООО ПРОМЭЛЕКТРОНИКА

Emitter Mechanical Dimensions

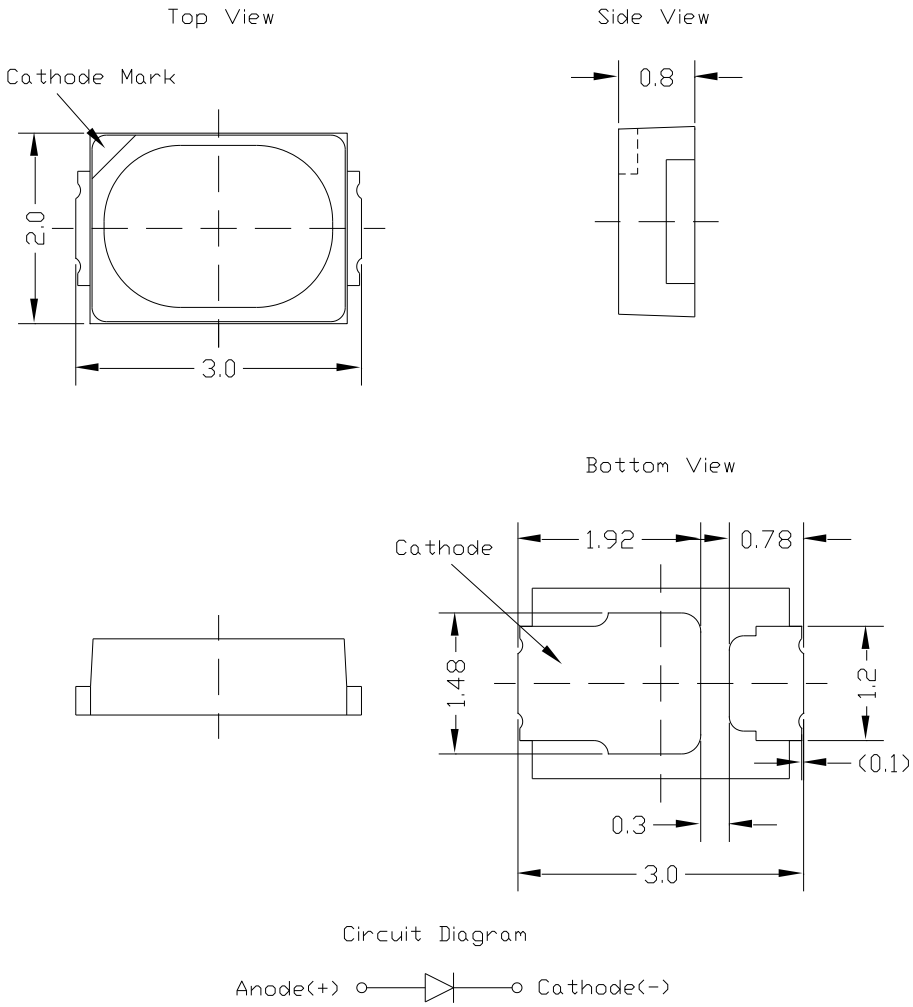

Notes:
1. The cathode side of the device is denoted by the chamfer on the part body.
2. Electrical insulation between the case and the board is required. Do not electrically connect either the anode or cathode to the slug.
3. Drawing not to scale.
4. All dimensions are in millimeters.
5. Unless otherwise indicated, tolerances are ± 0.10mm.
6. Please do not solder the emitter by manual hand soldering, otherwise it will damage the emitter.
7. **Please do not use a force of over 0.3kgf impact or pressure on the lens of the LED, otherwise it will cause a catastrophic failure.**

*The appearance and specifications of the product may be modified for improvement without notice.

No. 89, Xiyuan Rd., Zhongli City, Taoyuan County 320,
Taiwan (R.O.C.)
Tel ：+886-3-461-8618
Fax ：+886-3-461-8677
www.prolightopto.com

Flux Characteristics at 60mA, T_J = 25°C

Radiation Pattern	Color	Part Number Emitter	Luminous Flux Φ_V (lm) Minimum	Luminous Flux Φ_V (lm) Typical	CRI Minimum
Lambertian	Fresh Meat	PS2P-TFPE-FMR9	15	19	90

- ProLight maintains a tolerance of ± 7% on flux and power measurements.
- ProLight maintains a tolerance of ± 2 on CRI measurements.
- Please do not drive at rated current more than 1 second without proper heat sink.

Electrical Characteristics at 60mA, T_J = 25°C

Color	Forward Voltage V_F (V) Min.	Forward Voltage V_F (V) Typ.	Forward Voltage V_F (V) Max.	Thermal Resistance Junction to Slug (°C/ W)
Fresh Meat	2.9	3.2	3.5	50

- ProLight maintains a tolerance of ± 0.1V for Voltage measurements.

Optical Characteristics at 60mA, T_J = 25°C

Radiation Pattern	Color	Color Temperature CCT Min.	Color Temperature CCT Typ.	Color Temperature CCT Max.	Total included Angle (degrees) $\theta_{0.90V}$	Viewing Angle (degrees) $2\,\theta_{1/2}$
Lambertian	Fresh Meat	3100 K	-	4000 K	160	120

- ProLight maintains a tolerance of ± 5% for CCT measurements.

No. 89, Xiyuan Rd., Zhongli City, Taoyuan County 320,
Taiwan (R.O.C.)
Tel ：+886-3-461-8618
Fax ：+886-3-461-8677
www.prolightopto.com

We Provide the Light to the world

Absolute Maximum Ratings

Parameter	Fresh Meat
DC Forward Current (mA)	70
Peak Pulsed Forward Current (mA)	90 (less than 1/10 duty cycle@1KHz)
ESD Sensitivity (HBM per MIL-STD-883E Method 3015.7)	> ±500V
LED Junction Temperature	120°C
Operating Board Temperature at Maximum DC Forward Current	-40°C - 90°C
Storage Temperature	-40°C - 120°C
Soldering Temperature	JEDEC 020c 260°C
Allowable Reflow Cycles	3
Reverse Voltage	Not designed to be driven in reverse bias

Photometric Luminous Flux Bin Structure

Color	Bin Code	Minimum Photometric Flux (lm)	Maximum Photometric Flux (lm)	Available Color Bins
Fresh Meat	M2	15	17	All
	N1	17	19.4	All
	N2	19.4	22	【1】

- ProLight maintains a tolerance of ± 7% on flux and power measurements.
- The flux bin of the product may be modified for improvement without notice.
- 【1】 The rest of color bins are not 100% ready for order currently. Please ask for quote and order Possibility.

Forward Voltage Bin Structure

Color	Bin Code	Minimum Voltage (V)	Maximum Voltage (V)
Fresh Meat	B	2.9	3.0
	D	3.0	3.1
	E	3.1	3.2
	F	3.2	3.3
	G	3.3	3.4
	H	3.4	3.5

- ProLight maintains a tolerance of ± 0.1V for Voltage measurements.

Note: Although several bins are outlined, product availability in a particular bin varies by production run and by product performance. Not all bins are available in all colors.

No. 89, Xiyuan Rd., Zhongli City, Taoyuan County 320,
Taiwan (R.O.C.)
Tel ：+886-3-461-8618
Fax ：+886-3-461-8677
www.prolightopto.com

Color Bin

Fresh Meat Binning Structure Graphical Representation

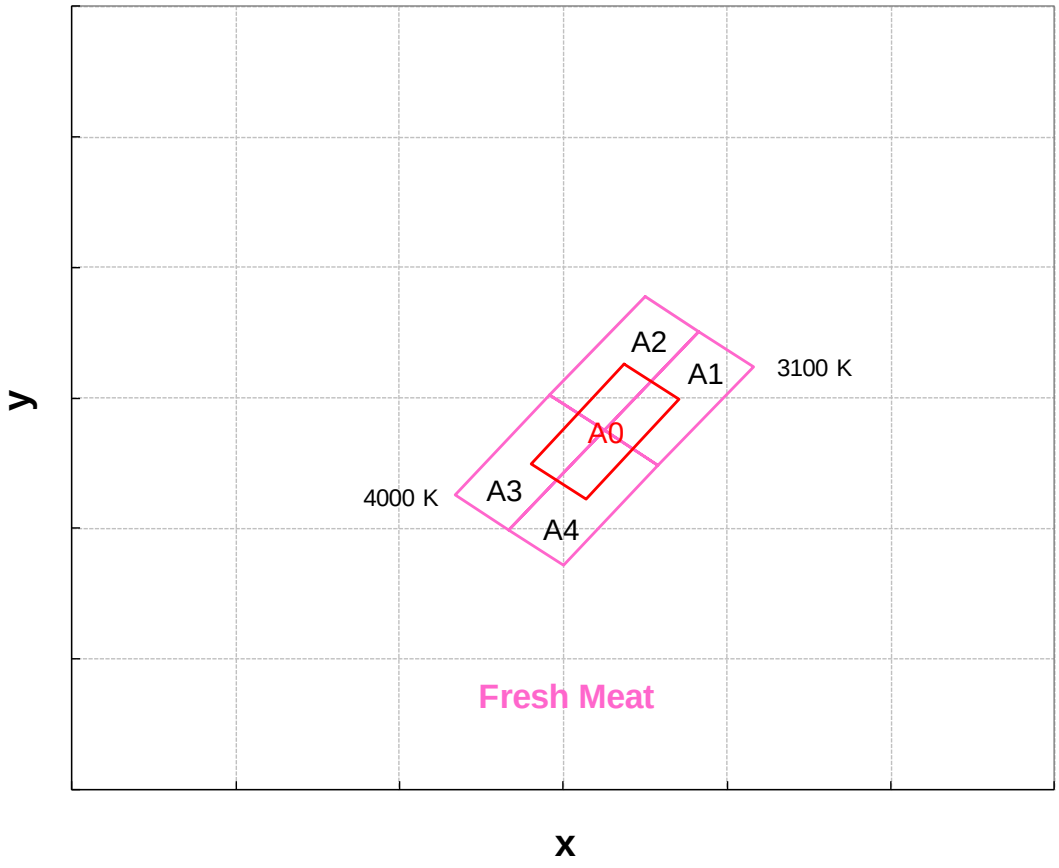

Note:

1. ProLight **SmartBin** is working to make the color bin smarter, by selecting that intelligence is infused into major **A0** bin with minor A1-A4 bins and processes that make assembly easily

No. 89, Xiyuan Rd., Zhongli City, Taoyuan County 320,
Taiwan (R.O.C.)
Tel ：+886-3-461-8618
Fax ：+886-3-461-8677
www.prolightopto.com

Color Spectrum, T_J = 25°C

1. Fresh Meat

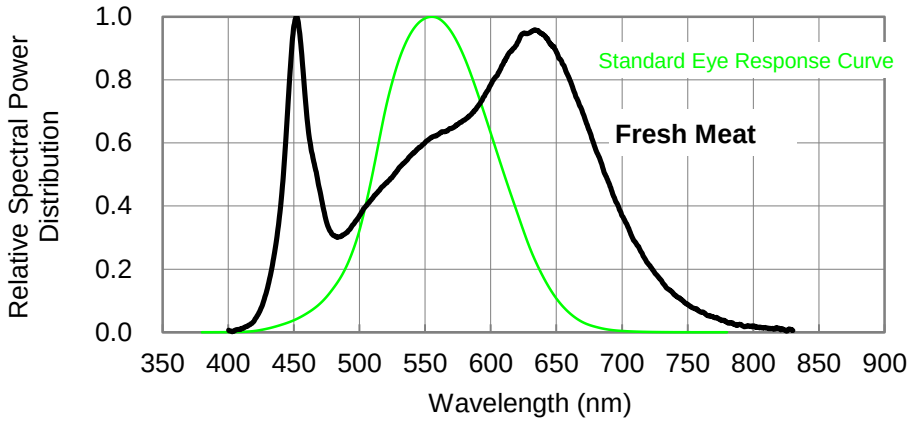

Light Output Characteristics

Relative Light Output vs. Junction Temperature at 60mA

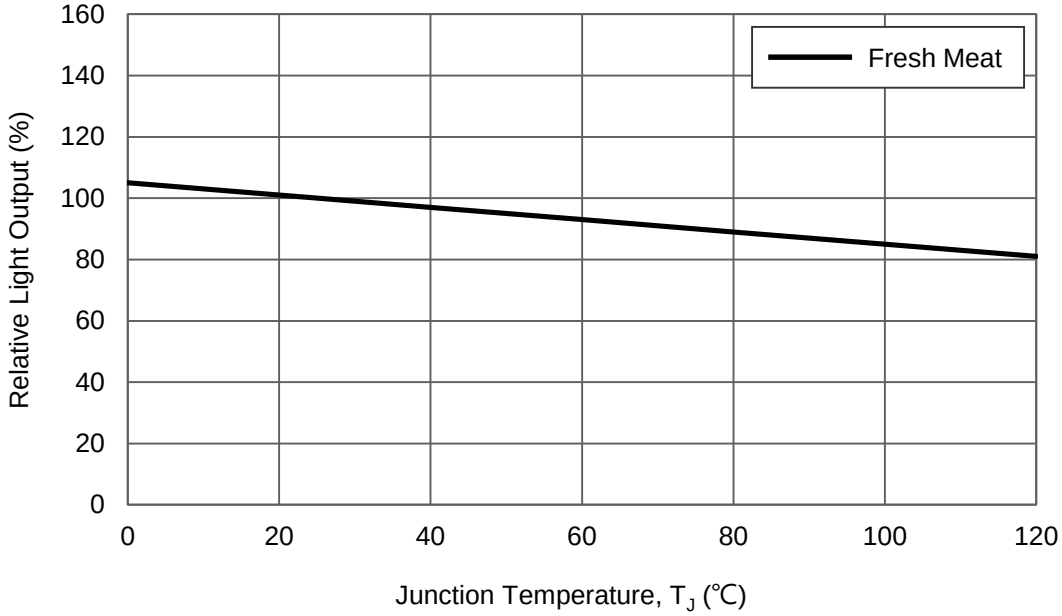

No. 89, Xiyuan Rd., Zhongli City, Taoyuan County 320,
Taiwan (R.O.C.)
Tel ：+886-3-461-8618
Fax ：+886-3-461-8677
www.prolightopto.com

We Provide the Light to the world

Forward Current Characteristics, T_J = 25˚C

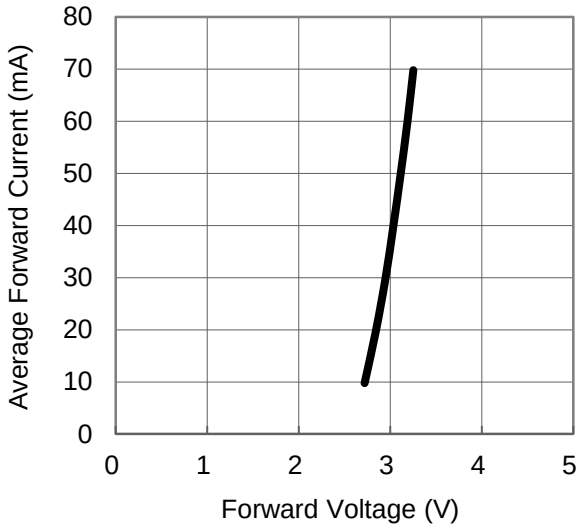

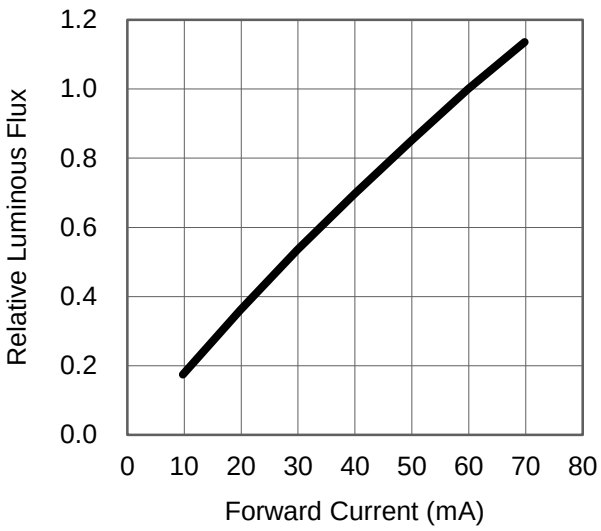

Ambient Temperature vs. Maximum Forward Current

1. Fresh Meat (T_{JMAX} = 120˚C)

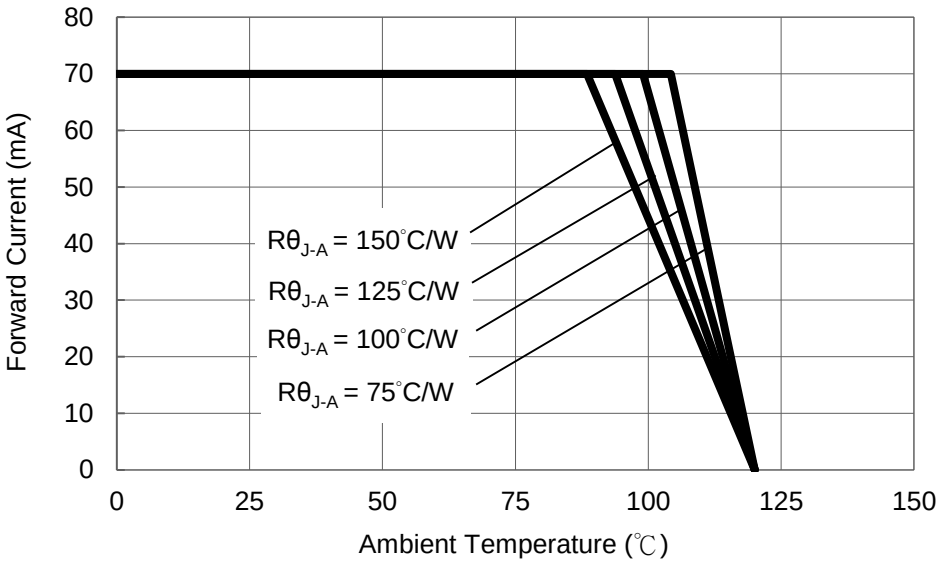

No. 89, Xiyuan Rd., Zhongli City, Taoyuan County 320,
Taiwan (R.O.C.)
Tel ：+886-3-461-8618
Fax ：+886-3-461-8677
www.prolightopto.com

We Provide the Light to the world

Typical Representative Spatial Radiation Pattern

Lambertian Radiation Pattern

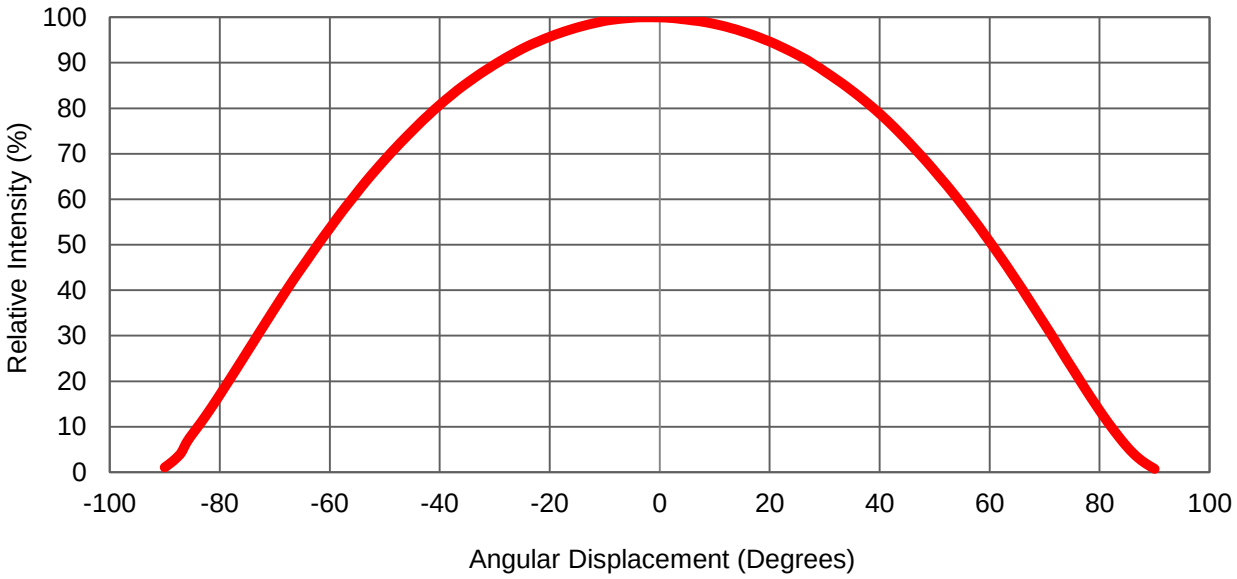

No. 89, Xiyuan Rd., Zhongli City, Taoyuan County 320,
Taiwan (R.O.C.)
Tel ：+886-3-461-8618
Fax ：+886-3-461-8677
www.prolightopto.com

Moisture Sensitivity Level - JEDEC Level 1

Level	Floor Life		Soak Requirements			
			Standard		Accelerated Environment	
	Time	Conditions	Time (hours)	Conditions	Time (hours)	Conditions
1	Unlimited	≤30˚C / 85% RH	168 +5/-0	85˚C / 85% RH	NA	NA

- The standard soak time includes a default value of 24 hours for semiconductor manufature's exposure time (MET) between bake and bag and includes the maximum time allowed out of the bag at the distributor's facility.
- Table below presents the moisture sensitivity level definitions per IPC/JEDEC's J-STD-020C.

Level	Floor Life		Soak Requirements			
			Standard		Accelerated Environment	
	Time	Conditions	Time (hours)	Conditions	Time (hours)	Conditions
1	Unlimited	≤30˚C / 85% RH	168 +5/-0	85˚C / 85% RH	NA	NA
2	1 year	≤30˚C / 60% RH	168 +5/-0	85˚C / 60% RH	NA	NA
2a	4 weeks	≤30˚C / 60% RH	696 +5/-0	30˚C / 60% RH	120 +1/-0	60˚C / 60% RH
3	168 hours	≤30˚C / 60% RH	192 +5/-0	30˚C / 60% RH	40 +1/-0	60˚C / 60% RH
4	72 hours	≤30˚C / 60% RH	96 +2/-0	30˚C / 60% RH	20 +0.5/-0	60˚C / 60% RH
5	48 hours	≤30˚C / 60% RH	72 +2/-0	30˚C / 60% RH	15 +0.5/-0	60˚C / 60% RH
5a	24 hours	≤30˚C / 60% RH	48 +2/-0	30˚C / 60% RH	10 +0.5/-0	60˚C / 60% RH
6	Time on Label (TOL)	≤30˚C / 60% RH	Time on Label (TOL)	30˚C / 60% RH	NA	NA

No. 89, Xiyuan Rd., Zhongli City, Taoyuan County 320,
Taiwan (R.O.C.)
Tel ：+886-3-461-8618
Fax ：+886-3-461-8677
www.prolightopto.com

Qualification Reliability Testing

Stress Test	Stress Conditions	Stress Duration	Failure Criteria
Room Temperature Operating Life (RTOL)	25°C, I_F = max DC (Note 1)	1000 hours	Note 2
Wet High Temperature Operating Life (WHTOL)	85°C/60%RH, I_F = max DC (Note 1)	1000 hours	Note 2
Wet High Temperature Storage Life (WHTSL)	85°C/85%RH, non-operating	1000 hours	Note 2
High Temperature Storage Life (HTSL)	110°C, non-operating	1000 hours	Note 2
Low Temperature Storage Life (LTSL)	-40°C, non-operating	1000 hours	Note 2
Non-operating Temperature Cycle (TMCL)	-40°C to 120°C, 30 min. dwell, <5 min. transfer	200 cycles	Note 2
Mechanical Shock	1500 G, 0.5 msec. pulse, 5 shocks each 6 axis		Note 3
Natural Drop	On concrete from 1.2 m, 3X		Note 3
Variable Vibration Frequency	10-2000-10 Hz, log or linear sweep rate, 20 G about 1 min., 1.5 mm, 3X/axis		Note 3
Solder Heat Resistance (SHR)	260°C ± 5°C, 10 sec.		Note 3
Solderability	Steam age for 16 hrs., then solder dip at 260°C for 5 sec.		Solder coverage on lead

Notes:
1. Depending on the maximum derating curve.
2. Criteria for judging failure

Item	Test Condition	Criteria for Judgement	
		Min.	Max.
Forward Voltage (V_F)	I_F = max DC	--	Initial Level x 1.1
Luminous Flux or Radiometric Power (Φ_V)	I_F = max DC	Initial Level x 0.7	--
Reverse Current (I_R)	V_R = 5V	--	50 μA

* The test is performed after the LED is cooled down to the room temperature.

3. A failure is an LED that is open or shorted.

No. 89, Xiyuan Rd., Zhongli City, Taoyuan County 320,
Taiwan (R.O.C.)
Tel ：+886-3-461-8618
Fax ：+886-3-461-8677
www.prolightopto.com

Recommended Solder Pad Design

Standard Emitter

TYPE A.

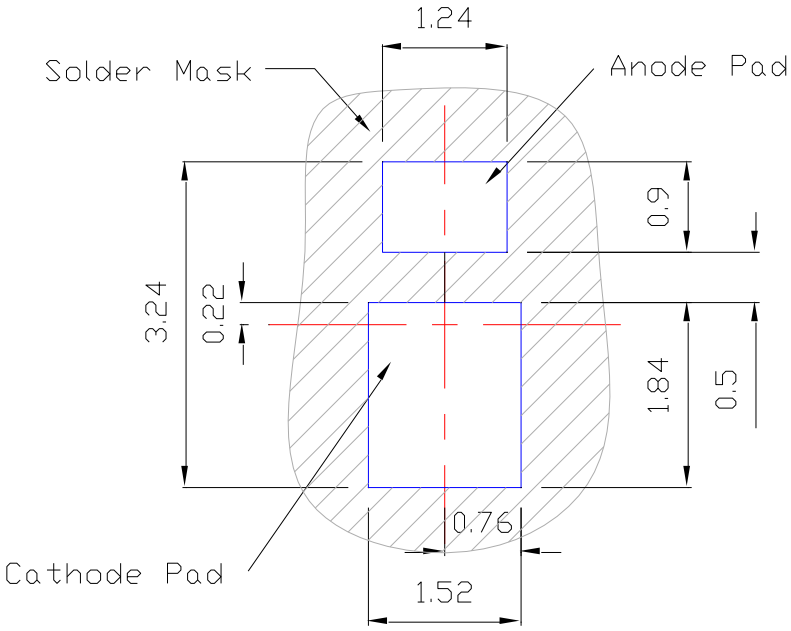

TYPE B.

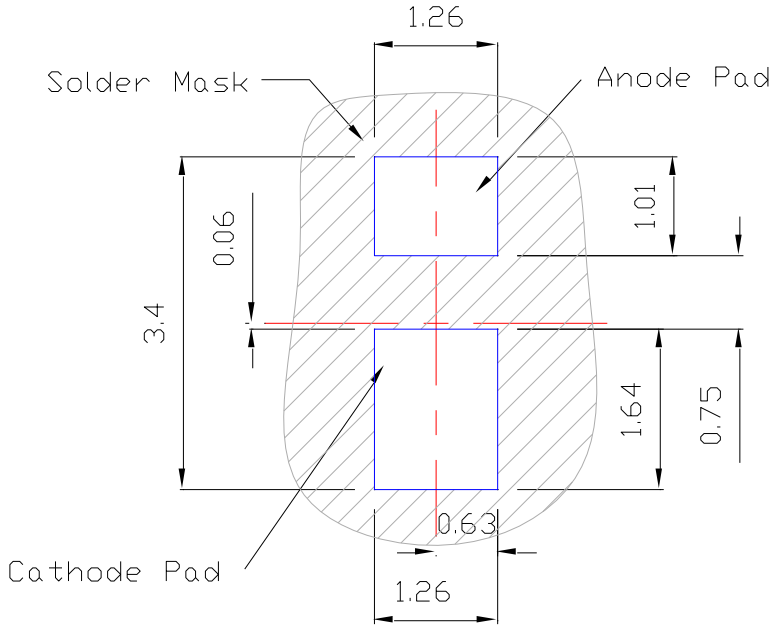

- All dimensions are in millimeters.

No. 89, Xiyuan Rd., Zhongli City, Taoyuan County 320,
Taiwan (R.O.C.)
Tel ：+886-3-461-8618
Fax ：+886-3-461-8677
www.prolightopto.com

Reflow Soldering Condition

Profile Feature	Sn-Pb Eutectic Assembly	Pb-Free Assembly
Average Ramp-Up Rate (T_{Smax} to T_P)	3°C / second max.	3°C / second max.
Preheat – Temperature Min (T_{Smin}) – Temperature Max (T_{Smax}) – Time (t_{Smin} to t_{Smax})	100°C 150°C 60-120 seconds	150°C 200°C 60-180 seconds
Time maintained above: – Temperature (T_L) – Time (t_L)	183°C 60-150 seconds	217°C 60-150 seconds
Peak/Classification Temperature (T_P)	240°C	260°C
Time Within 5°C of Actual Peak Temperature (t_P)	10-30 seconds	20-40 seconds
Ramp-Down Rate	6°C/second max.	6°C/second max.
Time 25°C to Peak Temperature	6 minutes max.	8 minutes max.

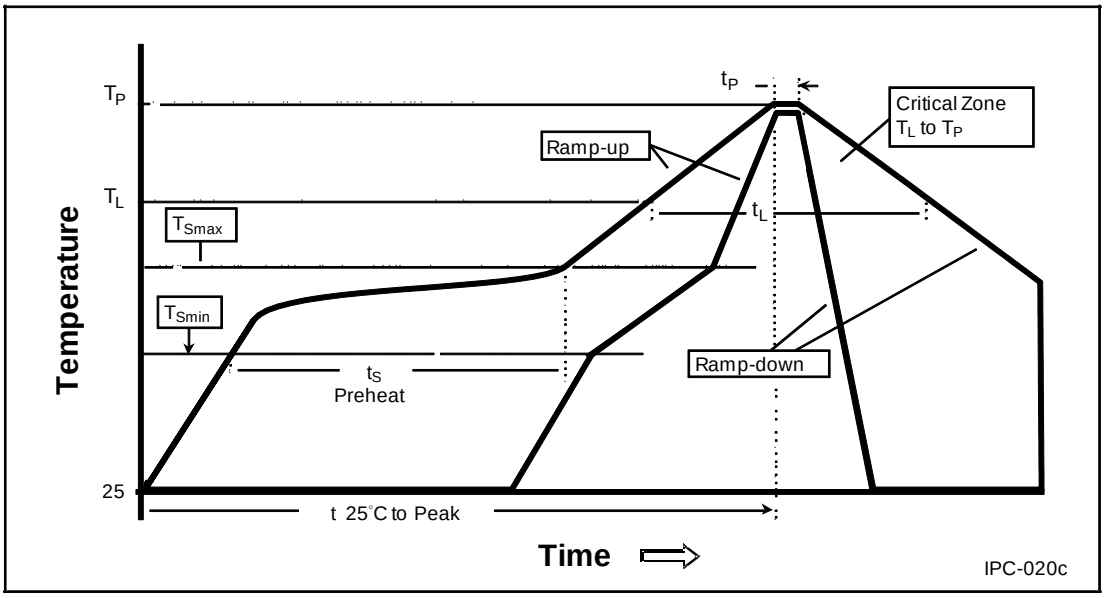

- **We recommend using the M705-S101-S4 solder paste from SMIC (Senju Metal Industry Co., Ltd.) for lead-free soldering.**
- **Do not use solder pastes with post reflow flux residue>47%. (58Bi-42Sn eutectic alloy, etc) This kind of solder pastes may cause a reliability problem to LED.**
- All temperatures refer to topside of the package, measured on the package body surface.
- Repairing should not be done after the LEDs have been soldered. When repairing is unavoidable, a double-head soldering iron should be used. It should be confirmed beforehand whether the characteristics of the LEDs will or will not be damaged by repairing.
- Reflow soldering should not be done more than three times.
- When soldering, do not put stress on the LEDs during heating.
- After soldering, do not warp the circuit board.

No. 89, Xiyuan Rd., Zhongli City, Taoyuan County 320,
Taiwan (R.O.C.)
Tel ：+886-3-461-8618
Fax ：+886-3-461-8677
www.prolightopto.com

Emitter Reel Packaging

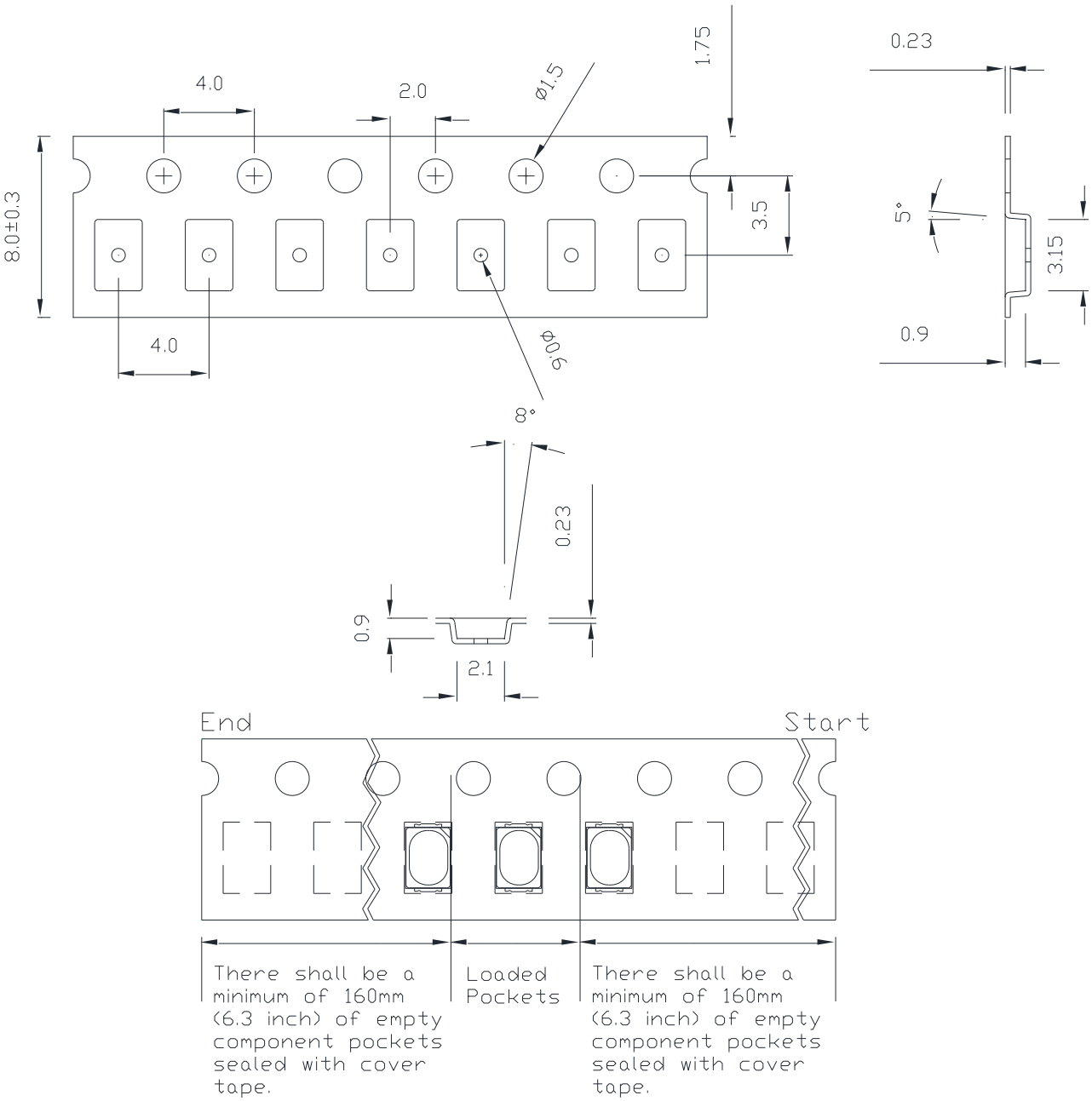

Notes:
1. Drawing not to scale.
2. All dimensions are in millimeters.
3. Unless otherwise indicated, tolerances are ± 0.10mm.

No. 89, Xiyuan Rd., Zhongli City, Taoyuan County 320,
Taiwan (R.O.C.)
Tel ：+886-3-461-8618
Fax ：+886-3-461-8677
www.prolightopto.com

Emitter Reel Packaging

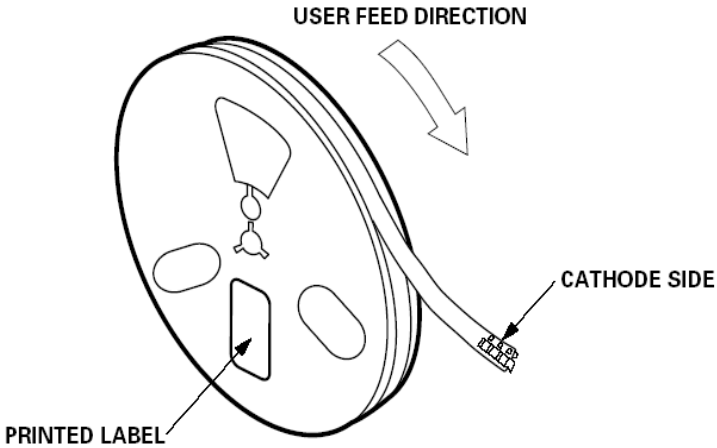

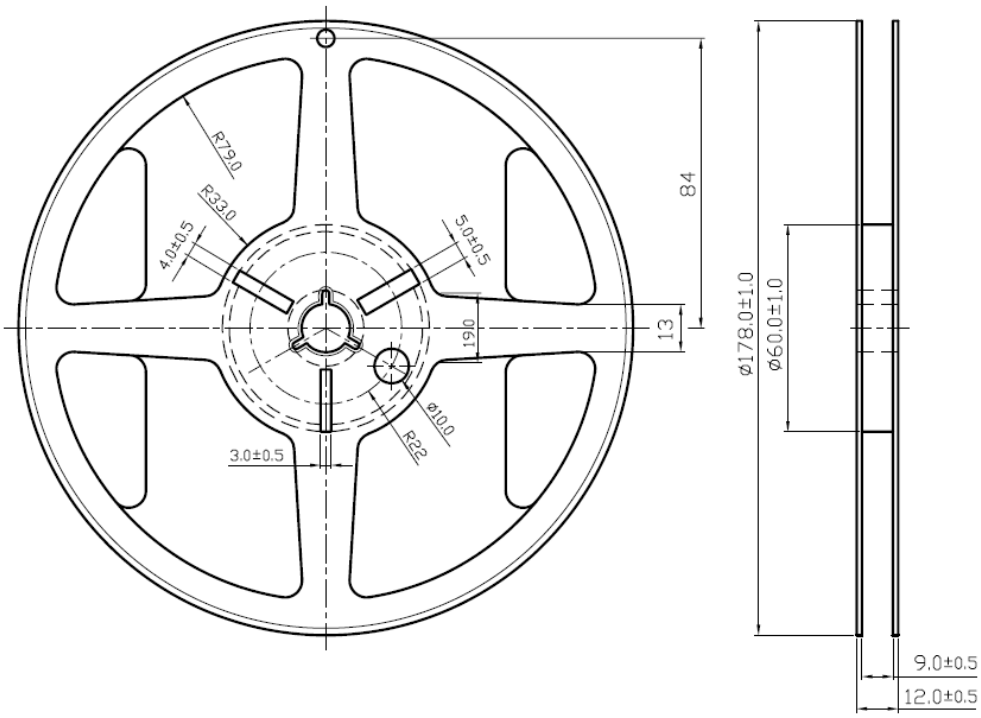

Notes:
1. Empty component pockets sealed with top cover tape.
2. 3000 pieces per reel.
3. Drawing not to scale.
4. All dimensions are in millimeters.

No. 89, Xiyuan Rd., Zhongli City, Taoyuan County 320,
Taiwan (R.O.C.)
Tel ：+886-3-461-8618
Fax ：+886-3-461-8677
www.prolightopto.com

Precaution for Use

- Storage
  Please do not open the moisture barrier bag (MBB) more than one week. This may cause the leads of LED discoloration. We recommend storing ProLight's LEDs in a dry box after opening the MBB. The recommended storage conditions are temperature 5 to 30°C and humidity less than 40% RH. It is also recommended to return the LEDs to the MBB and to reseal the MBB.
- The slug is is not electrically neutral. Therefore, we recommend to isolate the heat sink.
- **We recommend using the M705-S101-S4 solder paste from SMIC (Senju Metal Industry Co., Ltd.) for lead-free soldering.**
- **Do not use solder pastes with post reflow flux residue>47%. (58Bi-42Sn eutectic alloy, etc) This kind of solder pastes may cause a reliability problem to LED.**
- Any mechanical force or any excess vibration shall not be accepted to apply during cooling process to normal temperature after soldering.
- Please avoid rapid cooling after soldering.
- Components should not be mounted on warped direction of PCB.
- Repairing should not be done after the LEDs have been soldered. When repairing is unavoidable, a heat plate should be used. It should be confirmed beforehand whether the characteristics of the LEDs will or will not be damaged by repairing.
- This device should not be used in any type of fluid such as water, oil, organic solvent and etc. When cleaning is required, isopropyl alcohol should be used.
- When the LEDs are illuminating, operating current should be decide after considering the package maximum temperature.
- The appearance, specifications and flux bin of the product may be modified for improvement without notice. Please refer to the below website for the latest datasheets.
  http://www.prolightopto.com/

Handling of Silicone LEDs

Notes for handling of silicone LEDs

- Please do not use a force of over 0.3kgf impact or pressure on the silicone , otherwise it will cause a catastrophic failure.
- The LEDs should only be picked up by making contact with the sides of the LED body.
- Avoid touching the silicone especially by sharp tools such as Tweezers.
- Avoid leaving fingerprints on the silicone.
- Please store the LEDs away from dusty areas or seal the product against dust.
- When populating boards in SMT production, there are basically no restrictions regarding the form of the pick and place nozzle, except that mechanical pressure on the silicone lens must be prevented.
- Please do not mold over the silicone lens with another resin. (epoxy, urethane, etc)

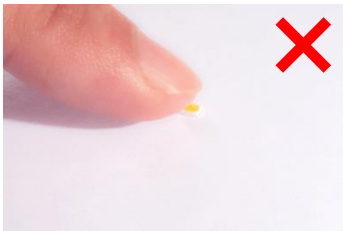

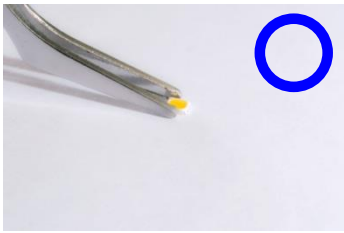

No. 89, Xiyuan Rd., Zhongli City, Taoyuan County 320,
Taiwan (R.O.C.)
Tel ：+886-3-461-8618
Fax ：+886-3-461-8677
www.prolightopto.com