POSC09100A-L series

9V / 1A Wall mounted type AC/DC adaptor

■ Features:

- *Universal AC input / Full range*
- *ErP step II / CEC level VI compliance*
- *MTBF > 100.000 h*
- *Protections: Overload / Short circuit / Over Voltage*

CONSTANT VOLTAGE

ELECTRICAL SPECIFICATION

MODEL	POSC09100A-L
OUTPUT	
Rated Voltage	9V
Rated Current	1A
Current Range	0 ÷ 1A
Rated Power	9W
Line Regulation	± 5%
Load Regulation	± 5%
Tolerance [3]	± 8%
Ripple & Noise (max.) [2]	$200mV_{P-P}$
Rise Time [4]	30ms / 230VAC at 10% to 90% load
Hold up Time (typ.)	3ms / 230VAC at full load
INPUT	
Voltage Range	90 ÷ 264VAC
Frequency Range	47 ÷ 63Hz
Efficiency (typ.)	81.34% - Input115/230Vac / Average（25%+50%+75%+100%）/4
AC Current (typ.)	0.4A / 230VAC
No load Power Consumption (max.)	<0.10W
PROTECTIONS	
Overload	1.1A-1.8A
	Auto-recovery.
Short Circuit	Type: hiccup mode, auto-recovery.
Over Voltage	Type: auto-recovery.

sales@prom-elec.com / ООО ПРОМЭЛЕКТРОНИКА

POSC09100A-L series

9V / 1A Wall mounted type AC/DC adaptor

WORKING ENVIRONMENT

Working Temperature	-5°C ÷ 40°C
Working Humidity	5 ÷ 95% RH non-condensing
Storage Temperature and Humidity	-40°C ÷ 85°C, 5 ÷ 90% RH non-condensing

SAFETY and EMC REGULATIONS

Safety Standards	Compliance to EN 62368
Withstand Voltage	IN/OUT: 3.6kVAC
Isolation Resistance	IN/OUT: 50MΩ/500VDC/25°C/70%
EMC Emission	Compliance to EN55032
EMC Immunity	Compliance to EN61000-4-2, -3, -4, -5
Harmonic Current	Compliance to EN61000-3-3; EN61000-3-2

OTHERS

DC wire and plug	Wire: 22AWG*2C, length = 1500mm	**DC Plug: 2.1/5.5 mm, (Angled-90°)**
Net Weight / Dimensions	73g / 56.0 x 28.0 x 42.0mm (L x W x H)	

MECHANICAL SPECIFICATION

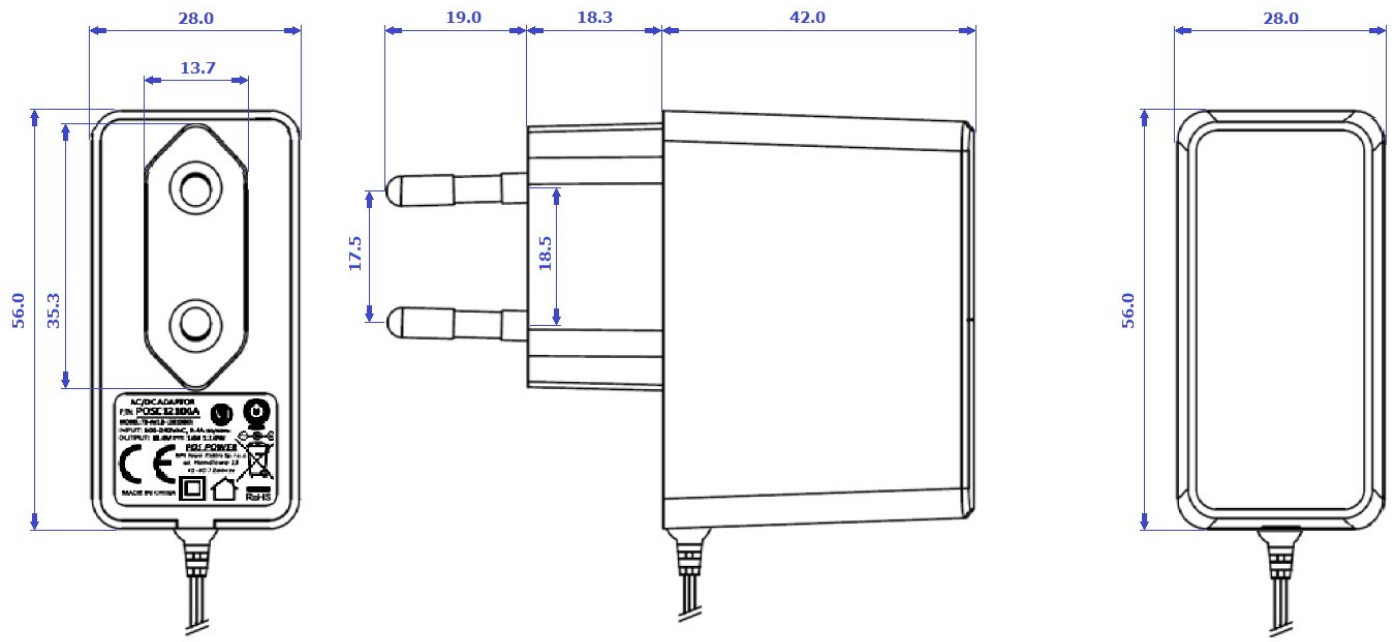

POSC09100A-L series

9V / 1A Wall mounted type AC/DC adaptor

MECHANICAL SPECIFICATION: DC wire and plug

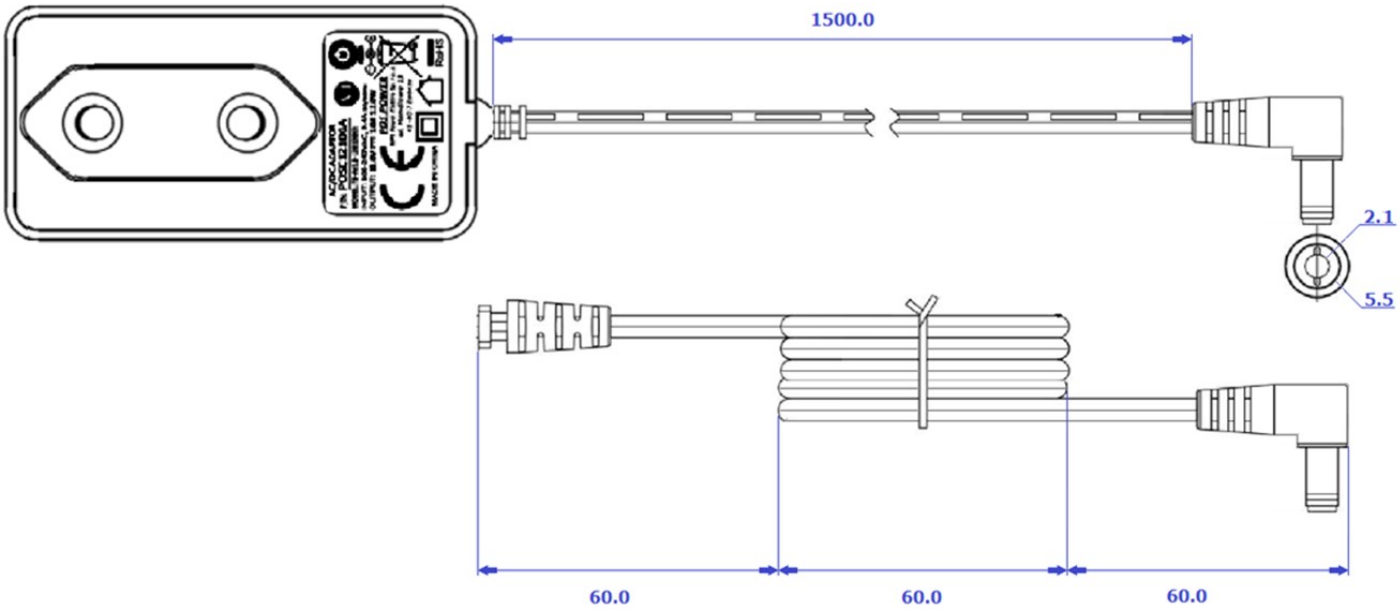

MODEL	DC PLUG	X [mm}	Y [mm]	Polarity
POSC09100A-L	**5.5x2.1mm**	**5.5**	**2.1**	**center positive**
POSC09100A-2555L	5.5x2.5mm	5.5	2.5	center positive
POSC09100A-1335L	3.5x1.3mm	3.5	1.3	center positive
POSC09100A-1740L	4.0x1.7mm	4.0	1.7	center positive
POSC09100A-1748L	4.8x1.7mm	4.8	1.7	center positive
POSC09100A-CNL	5.5x2.1mm	5.5	2.1	center negative
POSC09100A-2555-CNL	5.5x2.5mm	5.5	2.5	center negative
POSC09100A-1335-CNL	3.5x1.3mm	3.5	1.3	center negative
POSC09100A-1740-CNL	4.0x1.7mm	4.0	1.7	center negative
POSC09100A-1748-CNL	4.8x1.7mm	4.8	1.7	center negative

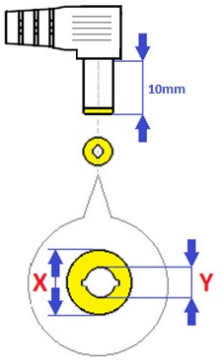

1. All parameters NOT specially mentioned are measured at 230VAC input, rated load and 25°C of ambient temperature.
2. Ripple & noise are measured at 20MHz of bandwidth by using a 12" twisted pair-wire terminated with a 0.1μF i 47μF parallel capacitor.
3. Tolerance includes set up tolerance, line regulation and load regulation.
4. Setup and rise time is measured from 0 to 90% rated output voltage.
5.Power supply is considered as component not indented to apply by end-user. Power supply meets safety and EMC standards however the final equipment with power supply must be re-quality to comply with EMC Directives.