RUTX12

v1.22

Copyright © 2025, UAB TELTONIKA NETWORKS. Specifications and information given in this document are subject to change by UAB TELTONIKA NETWORKS without prior notice.

HARDWARE

FRONT VIEW

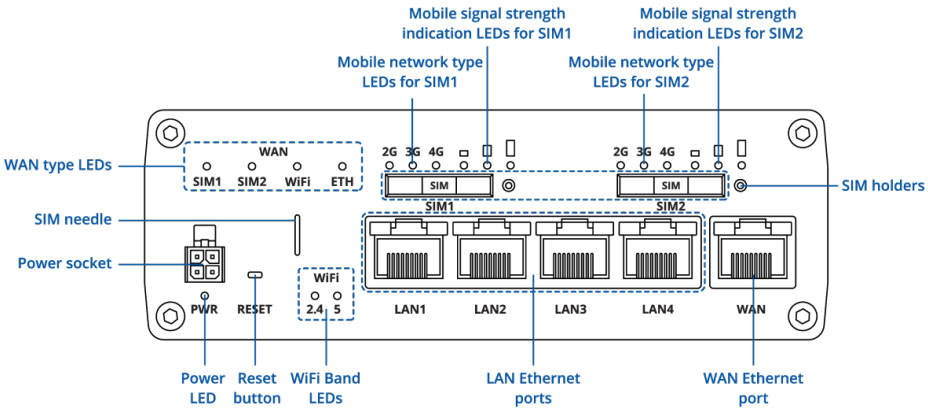

BACK VIEW

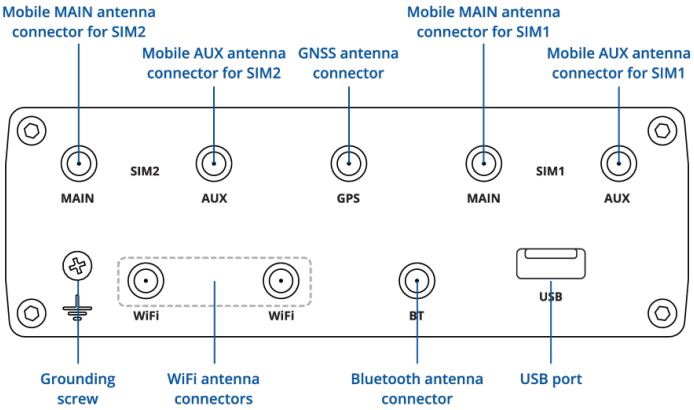

POWER SOCKET PINOUT

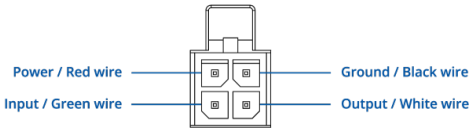

Copyright © 2025, UAB TELTONIKA NETWORKS. Specifications and information given in this document are subject to change by UAB TELTONIKA NETWORKS without prior notice.

FEATURES

Mobile

Mobile module	2 x 4G LTE Cat 6 up to 300 DL/50 UL Mbps; 3G up to 42 DL/ 5.76 UL Mbps
3GPP Release	Release 12
eSIM*	Consumer type eSIM, profile download and removal operations, up to 7 eSIM profiles; does not include data plans
	*Feature availability varies by order code
SIM switch*	Dual SIM and eSIM, auto-switch cases: weak signal, data limit, SMS limit, roaming, no network, network denied, data connection fail, SIM idle protection
	*Feature availability varies by order code
Status	IMSI, ICCID, operator, operator state, data connection state, network type, CA indicator, bandwidth, connected band, signal strength (RSSI), SINR, RSRP, RSRQ, EC/IO, RSCP, data sent/received, LAC, TAC, cell ID, ARFCN, UARFCN, EARFCN, MCC, and MNC
SMS	SMS status, SMS configuration, EMAIL to SMS, SMS to EMAIL, SMS to HTTP, SMS to SMS, scheduled SMS, SMS autoreply, SMPP
USSD	Supports sending and reading Unstructured Supplementary Service Data messages
Block/Allow list	Operator block/allow list (by country or separate operators)
Multiple PDN	Possibility to use different PDNs for multiple network access and services
Band management	Band lock, Used band status display
SIM idle protection service	Provides the possibility to configure the router to periodically switch to the unused SIM card and establish a data connection in order to prevent the SIM card from being blocked
SIM PIN code management	SIM PIN code management enables setting, changing, or disabling the SIM card's PIN
APN	Auto APN
Bridge	Direct connection (bridge) between mobile ISP and device on LAN
Passthrough	Router assigns its mobile WAN IP address to another device on LAN

Copyright © 2025, UAB TELTONIKA NETWORKS. Specifications and information given in this document are subject to change by UAB TELTONIKA NETWORKS without prior notice.

Wireless

Wireless mode	802.11b/g/n/ac Wave 2 (Wi-Fi 5) with data transmission rates up to 867 Mbps (Dual Band, MU-MIMO), 802.11r fast transition, Access Point (AP), Station (STA)
Wi-Fi security	WPA2-Enterprise: PEAP, WPA2-PSK, WPA-EAP, WPA-PSK, WPA3-SAE, WPA3-EAP, OWE; AES-CCMP, TKIP, Auto-cipher modes, client separation, EAP-TLS with PKCS#12 certificates, disable auto-reconnect, 802.11w Protected Management Frames (PMF)
SSID/ESSID	SSID stealth mode and access control based on MAC address
Wi-Fi users	Up to 150 simultaneous connections
Wireless Connectivity Features	Wireless mesh (802.11s), fast roaming (802.11r), Relayd, BSS transition management (802.11v), radio resource measurement (802.11k)
Wireless MAC filter	Allowlist, blocklist
Wireless QR code generator	Once scanned, a user will automatically enter your network without needing to input login information
TravelMate	Forward Wi-Fi hotspot landing page to a subsequent connected device

Bluetooth

Bluetooth 4.0	Bluetooth low energy (LE) for short range communication

Ethernet

WAN	1 x WAN port 10/100/1000 Mbps, compliance with IEEE 802.3, IEEE 802.3u, 802.3az standards, supports auto MDI/MDIX crossover
LAN	4 x LAN ports, 10/100/1000 Mbps, compliance with IEEE 802.3, IEEE 802.3u, 802.3az standards, supports auto MDI/MDIX crossover

Copyright © 2025, UAB TELTONIKA NETWORKS. Specifications and information given in this document are subject to change by UAB TELTONIKA NETWORKS without prior notice.

Network

Routing	Static routing, Dynamic routing (BGP, OSPF v2, RIP v1/v2, EIGRP, NHRP), Policy based routing
Network protocols	TCP, UDP, IPv4, IPv6, ICMP, NTP, DNS, HTTP, HTTPS, SFTP, FTP, SMTP, SSL/TLS, ARP, VRRP, PPP, PPPoE, UPNP, SSH, DHCP, Telnet, SMPP, SNMP, MQTT, Wake On Lan (WOL), VXLAN
VoIP passthrough support	H.323 and SIP-alg protocol NAT helpers, allowing proper routing of VoIP packets
Connection monitoring	Ping Reboot, Wget Reboot, Periodic Reboot, LCP and ICMP for link inspection
Firewall	Port forward, traffic rules, custom rules, TTL target customisation
Firewall status page	View all your Firewall statistics, rules, and rule counters
Ports management	View device ports, enable and disable each of them, turn auto-configuration on or off, change their transmission speed, and so on
Network topology	Visual representation of your network, showing which devices are connected to which other devices
Hotspot	Captive portal (hotspot), internal/external Radius server, Radius MAC authentication, SMS authorisation, SSO authentication, internal/external landing page, walled garden, user scripts, URL parameters, user groups, individual user or group limitations, user management, 9 default customisable themes and optionality to upload and download customised hotspot themes
DHCP	Static and dynamic IP allocation, DHCP relay, DHCP server configuration, status, static leases: MAC with wildcards
QoS / Smart Queue Management (SQM)	Traffic priority queuing by source/destination, service, protocol or port, WMM, 802.11e
DDNS	Supported >25 service providers, others can be configured manually
DNS over HTTPS	DNS over HTTPS proxy enables secure DNS resolution by routing DNS queries over HTTPS
Network backup	Wi-Fi WAN, Mobile, VRRP, Wired options, each of which can be used as an automatic Failover
Load balancing	Balance Internet traffic over multiple WAN connections
SSHFS	Possibility to mount remote file system via SSH protocol
VRF support	Initial virtual routing and forwarding (VRF) support
Traffic Management	Real-time monitoring, wireless signal charts, traffic usage history

Copyright © 2025, UAB TELTONIKA NETWORKS. Specifications and information given in this document are subject to change by UAB TELTONIKA NETWORKS without prior notice.

Security

802.1x	Port-based network access control client
Authentication	Pre-shared key, digital certificates, X.509 certificates, TACACS+, Internal & External RADIUS users authentication, IP & login attempts block, time-based login blocking, built-in random password generator
Firewall	Preconfigured firewall rules can be enabled via WebUI, unlimited firewall configuration via CLI, DMZ, NAT, NAT-T, NAT64
Attack prevention	DDOS prevention (SYN flood protection, SSH attack prevention, HTTP/HTTPS attack prevention), port scan prevention (SYN-FIN, SYN-RST, X-mas, NULL flags, FIN scan attacks)
VLAN	Port and tag-based VLAN separation
Mobile quota control	Mobile data limit, customizable period, start time, warning limit, phone number
WEB filter	Blacklist for blocking out unwanted websites, Whitelist for specifying allowed sites only
Access control	Flexible access control of SSH, Web interface, CLI and Telnet
TPM*	Identification and authentication module, TPM 2.0 standard
	*Feature availability varies by order code
SSL certificate generation	Let's Encrypt and SCEP certificate generation methods

Copyright © 2025, UAB TELTONIKA NETWORKS. Specifications and information given in this document are subject to change by UAB TELTONIKA NETWORKS without prior notice.

VPN

OpenVPN	Multiple clients and a server can run simultaneously, 27 encryption methods
OpenVPN Encryption	DES-CBC 64, RC2-CBC 128, DES-EDE-CBC 128, DES-EDE3-CBC 192, DESX-CBC 192, BF-CBC 128, RC2-40-CBC 40, CAST5-CBC 128, RC2-64-CBC 64, AES-128-CBC 128, AES-128-CFB 128, AES-128-CFB1 128, AES-128-CFB8 128, AES-128-OFB 128, AES-128-GCM 128, AES-192-CFB 192, AES-192-CFB1 192, AES-192-CFB8 192, AES-192-OFB 192, AES-192-CBC 192, AES-192-GCM 192, AES-256-GCM 256, AES-256-CFB 256, AES-256-CFB1 256, AES-256-CFB8 256, AES-256-OFB 256, AES-256-CBC 256
IPsec	XFRM, IKEv1, IKEv2, with 14 encryption methods for IPsec (3DES, DES, AES128, AES192, AES256, AES128GCM8, AES192GCM8, AES256GCM8, AES128GCM12, AES192GCM12, AES256GCM12, AES128GCM16, AES192GCM16, AES256GCM16)
GRE	GRE tunnel, GRE tunnel over IPsec support
PPTP, L2TP	Client/Server instances can run simultaneously, L2TPv3, L2TP over IPsec support
Stunnel	Proxy designed to add TLS encryption functionality to existing clients and servers without any changes in the program's code
DMVPN	Method of building scalable IPsec VPNs, Phase 2 and Phase 3 and Dual Hub support
SSTP	SSTP client instance support
ZeroTier	ZeroTier VPN client support
WireGuard	WireGuard VPN client and server support
Tinc	Tinc offers encryption, authentication and compression in it's tunnels. Client and server support.
Tailscale	Tailscale offers speed, stability, and simplicity over traditional VPNs. Encrypted point-to-point connections using the open source WireGuard protocol

OPC UA

Supported modes	Client, Server
Supported connection types	TCP

MODBUS

Supported modes	Server, Client
Supported connection types	TCP, USB
Custom registers	MODBUS TCP custom register block requests, which read/write to a file inside the router, and can be used to extend MODBUS TCP Client functionality
Supported data formats	8-bit: INT, UINT; 16-bit: INT, UINT (MSB or LSB first); 32-bit: float, INT, UINT (ABCD (big-endian), DCBA (little-endian), CDAB, BADC), HEX, ASCII

Copyright © 2025, UAB TELTONIKA NETWORKS. Specifications and information given in this document are subject to change by UAB TELTONIKA NETWORKS without prior notice.

DATA TO SERVER

Protocol	HTTP(S), MQTT, Azure MQTT
Data to server	Extract parameters from multiple sources and different protocols, and send them all to a single server; Custom LUA scripting, allowing scripts to utilize the router's Data to server feature

MQTT Gateway

Modbus MQTT Gateway	Allows sending commands and receiving data from MODBUS Server through MQTT broker

DNP3

Supported modes	Station, Outstation
Supported connection	TCP, USB

DLMS/COSEM

DLMS Support	DLMS - standard protocol for utility meter data exchange
Supported modes	Client
Supported connection types	TCP, USB

API

Teltonika Networks Web API (beta) support	Expand your device's possibilities by using a set of configurable API endpoints to retrieve or change data. For more information, please refer to this documentation: https://developers.teltonika-networks.com

Copyright © 2025, UAB TELTONIKA NETWORKS. Specifications and information given in this document are subject to change by UAB TELTONIKA NETWORKS without prior notice.

Monitoring & Management

WEB UI	HTTP/HTTPS, status, configuration, FW update, CLI, troubleshoot, multiple event log servers, firmware update availability notifications, event log, system log, kernel log, Internet status
FOTA	Firmware update from server, automatic notification
SSH	SSH (v1, v2)
SMS	SMS status, SMS configuration
Call	Reboot, Status, Mobile data on/off, Output on/off, answer/hang-up with a timer, Wi-Fi on/off
TR-069	OpenACS, EasyCwmp, ACSLite, tGem, LibreACS, GenieACS, FreeACS, LibCWMP, Friendly tech, AVSystem
MQTT	MQTT Broker, MQTT publisher
SNMP	SNMP (v1, v2, v3), SNMP Trap, Brute force protection
JSON-RPC	Management API over HTTP/HTTPS
RMS	Teltonika Remote Management System (RMS)

IoT Platforms

ThingWorx	Allows monitoring of: WAN Type, WAN IP, Mobile Operator Name, Mobile Signal Strength, Mobile Network Type
Cumulocity - Cloud of Things	Allows monitoring of: Device Model, Revision and Serial Number, WAN Type and IP, Mobile Cell ID, ICCID, IMEI, Connection Type, Operator, Signal Strength. Has reboot and firmware upgrade actions
Azure IoT Hub	Can be configured with Data to Server to send all the available parameters to the cloud. Has Direct method support which allows to execute RutOS API calls on the IoT Hub. Also has Plug and Play integration with Device Provisioning Service that allows zero-touch device provisioning to IoT Hubs
AWS IoT Core	Utility to interact with the AWS cloud platform. Jobs Support: Call the device's API using AWS Jobs functionality

System Characteristics

CPU	Quad-core ARM Cortex A7, 717 MHz
RAM	256 MB, DDR3
FLASH storage	256 MB, SPI Flash

Copyright © 2025, UAB TELTONIKA NETWORKS. Specifications and information given in this document are subject to change by UAB TELTONIKA NETWORKS without prior notice.

Firmware / Configuration

WEB UI	Update FW from file, check FW on server, configuration profiles, configuration backup
FOTA	Update FW
RMS	Update FW/configuration for multiple devices at once
Keep settings	Update FW without losing current configuration
Factory settings reset	A full factory reset restores all system settings, including the IP address, PIN, and user data to the default manufacturer's configuration

FIRMWARE CUSTOMISATION

Operating system	RutOS (OpenWrt based Linux OS)
Supported languages	Busybox shell, Lua, C, C++, and Python, Java in Package manager
Development tools	SDK package with build environment provided
GPL customization	You can create your own custom, branded firmware and web page application by changing colours, logos, and other elements in our firmware to fit your or your clients' needs
Package Manager	The Package Manager is a service used to install additional software on the device

Location Tracking

GNSS	GPS, GLONASS, BeiDou, Galileo and QZSS
Coordinates	GNSS coordinates via WebUI, SMS, TAVL, RMS
NMEA	NMEA 0183
NTRIP	NTRIP protocol (Networked Transport of RTCM via Internet Protocol)
Server software	Supported server software TAVL, RMS
Geofencing	Configurable multiple geofence zones

USB

Data rate	USB 2.0
Applications	Samba share, USB-to-serial
External devices	Possibility to connect external HDD, flash drive, additional modem, printer, USB-serial adapter
Storage formats	FAT, FAT32, exFAT, NTFS (read-only), ext2, ext3, ext4

Copyright © 2025, UAB TELTONIKA NETWORKS. Specifications and information given in this document are subject to change by UAB TELTONIKA NETWORKS without prior notice.

Input / Output

Input	1 x Digital Input, 0 - 6 V detected as logic low, 8 - 30 V detected as logic high
Output	1 x Digital Output, Open collector output, max output 30 V, 300 mA
Events	Email, RMS, SMS
I/O juggler	Allows to set certain I/O conditions to initiate event

Power

Connector	4-pin industrial DC power socket
Input voltage range	9 - 50 VDC, reverse polarity protection, voltage surge/transient protection
PoE (passive)	Possibility to power up through LAN1 port, not compatible with IEEE802.3af, 802.3at and 802.3bt standards, Mode B, 9 - 50 VDC
Power consumption	Idle: < 4 W, Max: < 22 W

Physical Interfaces

Ethernet	5 x RJ45 ports, 10/100/1000 Mbps
I/O's	1 x Digital Input, 1 x Digital Output on 4-pin power connector
Status LEDs	4 x connection status LEDs, 6 x connection strength LEDs, 10 x Ethernet port status LEDs, 4 x WAN status LEDs, 1 x Power LED, 2 x 2.4G and 5G Wi-Fi LEDs
SIM	2 x SIM slots (Mini SIM - 2FF), 1.8 V/3 V, external SIM holders
Power	1 x 4-pin power connector
Antennas	4 x SMA for LTE, 2 x RP-SMA for WiFi, 1 x RP-SMA for Bluetooth, 1 x SMA for GNNS
USB	1 x USB A port for external devices
Reset	Reboot/User default reset/Factory reset button
Other	1 x Grounding screw

Physical Specification

Casing material	Full aluminium housing
Dimensions (W x H x D)	132 x 44.2 x 95.1 mm
Weight	540 g
Mounting options	DIN rail, wall mount, flat surface (all require additional kit)

Copyright © 2025, UAB TELTONIKA NETWORKS. Specifications and information given in this document are subject to change by UAB TELTONIKA NETWORKS without prior notice.

Operating Environment

Operating temperature	-40 °C to 75 °C
Operating humidity	10% to 90% non-condensing
Ingress Protection Rating	IP30

Regulatory & Type Approvals

Regulatory	CE, UKCA, EAC, UCRF, CITC, ANRT, ICASA, NOM, Anatel, RCM, SIRIM, NTC, NBTC, CB, E-mark

EMC Emissions & Immunity

Standards	EN 55032:2015 EN 55035:2017 EN IEC 61000-3-2:2019 EN 61000-3-3:2013 + A1:2019 EN 301 489-1:V2.2.3 EN 301 489-3 V2.1.1 EN 301 489-17:V3.2.4 EN 301 489-19 V2.1.1 Draft EN 301 489-52:V1.1.0
ESD	EN 61000-4-2:2009
Radiated Immunity	EN IEC 61000-4-3:2006 + A1:2008 + A2:2010
EFT	EN 61000-4-4:2012
Surge Immunity (AC Mains Power Port)	EN 61000-4-5:2014 + A1:2017
CS	EN 61000-4-6:2014
DIP	EN 61000-4-11:2004 + A1:2017

RF

Standards	EN 300 328:V2.2.2 EN 300 440:V2.2.1 EN 301 893 V2.1.1 EN 301 908-1:V13.1.1 EN 301 908-2:V13.1.1 EN 301 908-13:V13.1.1 EN 303 413 V1.1.1

Safety

Standards	**CE**: EN IEC 62368-1:2020 + A11:2020 **RCM**: AS/NZS 62368.1:2018 **CB**: IEC 62368-1:2018

Copyright © 2025, UAB TELTONIKA NETWORKS. Specifications and information given in this document are subject to change by UAB TELTONIKA NETWORKS without prior notice.

ORDERING

STANDARD PACKAGE*

RUTX12

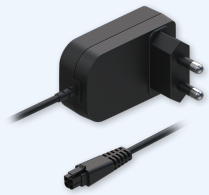

EU POWER SUPPLY, 24W

4 X MOBILE SMA ANTENNA

2 X WIFI MAGNETIC SMA ANTENNA

1 X GNSS ADHESIVE SMA ANTENNA

1 X BLUETOOTH MAGNETIC SMA ANTENNA

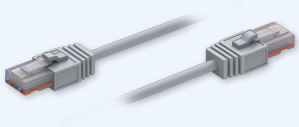

ETHERNET CABLE 1.5M

SIM ADAPTER KIT

QSG (QUICK START GUIDE)

- RUTX12
- 24 W PSU
- 4x Mobile antennas (swivel, SMA male)
- 2x Wi-Fi antennas (magnetic mount, RP-SMA male, 1.5 m cable)
- 1x GNSS antenna (adhesive, SMA male, 3 m cable)
- 1x Bluetooth antenna (magnetic mount, RP-SMA male, 1.5 m cable)
- Ethernet cable (1.5 m)
- SIM Adapter kit
- QSG (Quick Start Guide)
- Packaging box

*Standard package contents may differ based on standard order codes.

Copyright © 2025, UAB TELTONIKA NETWORKS. Specifications and information given in this document are subject to change by UAB TELTONIKA NETWORKS without prior notice.

For more information on all available packaging options – please contact us directly.

CLASSIFICATION CODES

HS Code: 851762

HTS: 8517.62.00

Copyright © 2025, UAB TELTONIKA NETWORKS. Specifications and information given in this document are subject to change by UAB TELTONIKA NETWORKS without prior notice.

AVAILABLE VERSIONS

RUTX12 **43****** North America **eSIM**	**4G (LTE-FDD):** B2, B4, B5, B7, B12, B13, B14, B25, B26, B29, B30, B66, B71 **4G (LTE-TDD):** B41, B48	RUTX12430100 / Standard package with US PSU RUTX12430600 / Mass packing code
RUTX12 **23****** EMEA[3], Australia, Brazil **eSIM**	**4G (LTE-FDD):** B1, B3, B5, B7, B8, B20, B28, B321 **4G (LTE-TDD):** B38, B40, B41 **3G:** B1, B3, B5, B8	RUTX12230000 / Standard package with EU PSU RUTX12230200 / Standard package with AU PSU RUTX12230300 / Standard package with UK PSU RUTX12230600 / Mass packing code
RUTX12 **0******* EMEA[3], Australia, Brazil	**4G (LTE-FDD):** B1, B3, B5, B7, B8, B20, B28, B32[1] **4G (LTE-TDD):** B38, B40, B41 **3G:** B1, B3, B5, B8	RUTX12000000 / Standard package with EU PSU RUTX12000700 / Standard package with Power cable with 4-way screw terminal RUTX12000300 / Standard package with UK PSU RUTX12000100 / Standard package with US PSU RUTX12000200 / Standard package with AU PSU RUTX12000600 / Mass packing code
RUTX12 **1******* North America	**4G (LTE-FDD)**: B2, B4, B5, B7, B12, B13, B25, B26, B29[1],B30, B66 **3G**: B2, B4, B5	RUTX12100100 / Standard package with US PSU RUTX12100000 / Standard package with EU PSU
RUTX12 **2******* EMEA[3], Australia, Brazil	**4G (LTE-FDD):** B1, B3, B5, B7, B8, B20, B28, B32 **4G (LTE-TDD):** B38, B40, B41 **3G:** B1, B3, B5, B8	RUTX12200000 / Standard package with EU PSU RUTX12200100 / Standard package with US PSU RUTX12200200 / Standard package with AU PSU RUTX12200300 / Standard package with UK PSU RUTX12200700 / Standard package with Power cable with 4-way screw terminal RUTX12200600 / Mass packing code

Copyright © 2025, UAB TELTONIKA NETWORKS. Specifications and information given in this document are subject to change by UAB TELTONIKA NETWORKS without prior notice.

RUTX12 **4***** North America	**4G (LTE-FDD):** B2, B4, B5, B7, B12, B13, B14, B25, B26, B29, B30, B66, B71 **4G (LTE-TDD):** B41, B48	RUTX12400100 / Standard package with US PSU RUTX12400000 / Standard package with EU PSU

The price and lead-times for region (operator) specific versions may vary. For more information please contact us.

1 - LTE-FDD B29 and B32 support Rx only, and in 2×CA it is only for secondary component carrier
2 - Excluding Japan and CMCC
3 - Regional availability - excluding Russia, Belarus & Iran

RUTX12 SPATIAL MEASUREMENTS

PHYSICAL SPECIFICATION

Device housing (W x H x D)*	132 x 44.2 x 95.1 mm
Box (W x H x D):	355 x 60 x 175 mm
	*Housing measurements are presented without antenna connectors and screws; for measurements of other device elements look to the sections below.

TOP VIEW

The figure below depicts the measurements of device and its components as seen from the top:

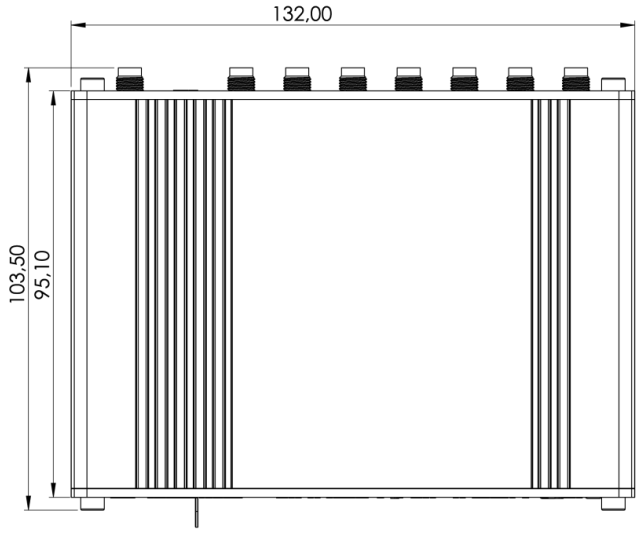

Copyright © 2025, UAB TELTONIKA NETWORKS. Specifications and information given in this document are subject to change by UAB TELTONIKA NETWORKS without prior notice.

RIGHT VIEW

The figure below depicts the measurements of device and its components as seen from the right:

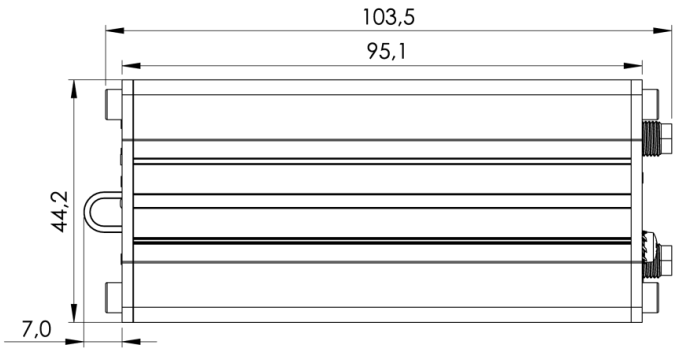

REAR VIEW

The figure below depicts the measurements of device and its components as seen from the back panel side:

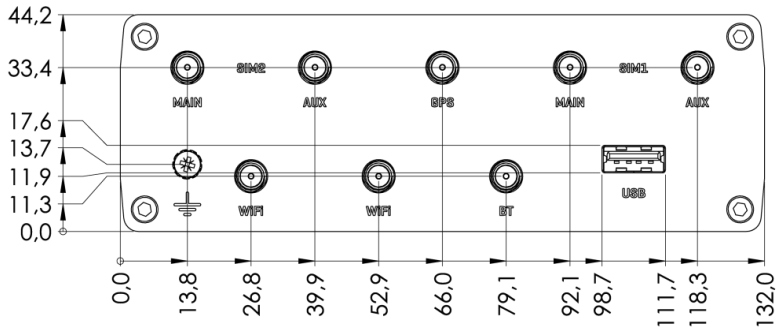

FRONT VIEW

The figure below depicts the measurements of device and its components as seen from the front panel side:

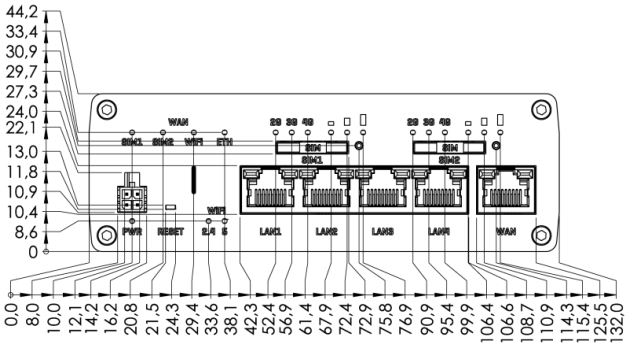

Copyright © 2025, UAB TELTONIKA NETWORKS. Specifications and information given in this document are subject to change by UAB TELTONIKA NETWORKS without prior notice.

MOUNTING SPACE REQUIREMENTS

The figure below depicts an approximation of the device's dimensions when cables and antennas are attached:

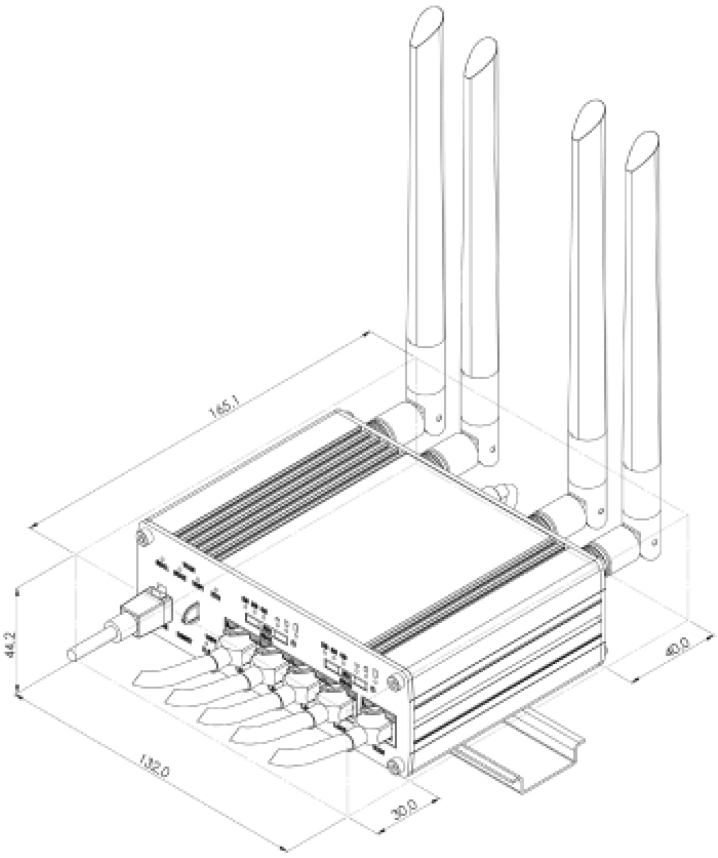

Copyright © 2025, UAB TELTONIKA NETWORKS. Specifications and information given in this document are subject to change by UAB TELTONIKA NETWORKS without prior notice.