M0220MD-202MDAR1-3

Dot-matrix Character Vacuum Fluorescent Display Module

M-	VFD Module
0220-	2 Lines x 20 Characters
M-	Model
D-	Dot-Matrix
202MDA-	Character Size = 3.85mm x 8.95mm
R-	**RoHS Compliant**
1-3	M68 Parallel Interface

Newhaven Display International, Inc.

2661 Galvin Ct.

Elgin IL, 60124

Ph: 847-844-8795 Fax: 847-844-8796

www.newhavendisplay.com

nhtech@newhavendisplay.com nhsales@newhavendisplay.com

sales@prom-elec.com / ООО ПРОМЭЛЕКТРОНИКА

Document Revision History

Revision	Date	Description	Changed by
0	3/21/2005	Initial Release	-
1	9/21/2009	Updated Driver version, modified VF glass pins	CL
2	12/4/2009	Reduce pixel size to increase brightness and lifetime	CL
3	1/26/2011	Storage temperature updated	JT
4	7/26/15	Module redesigned	AK

Functions and Features

- **2 lines x 20 characters**
- **Built-in controller**
- **Built-in VF AC power supply**
- **5.0V power supply**
- **5x8 dots with cursor**
- **Parallel interface (serial interface selectable by onboard jumpers)**
- **Display color: x = 0.250, y = 0.439 (Green)**

Mechanical Drawing

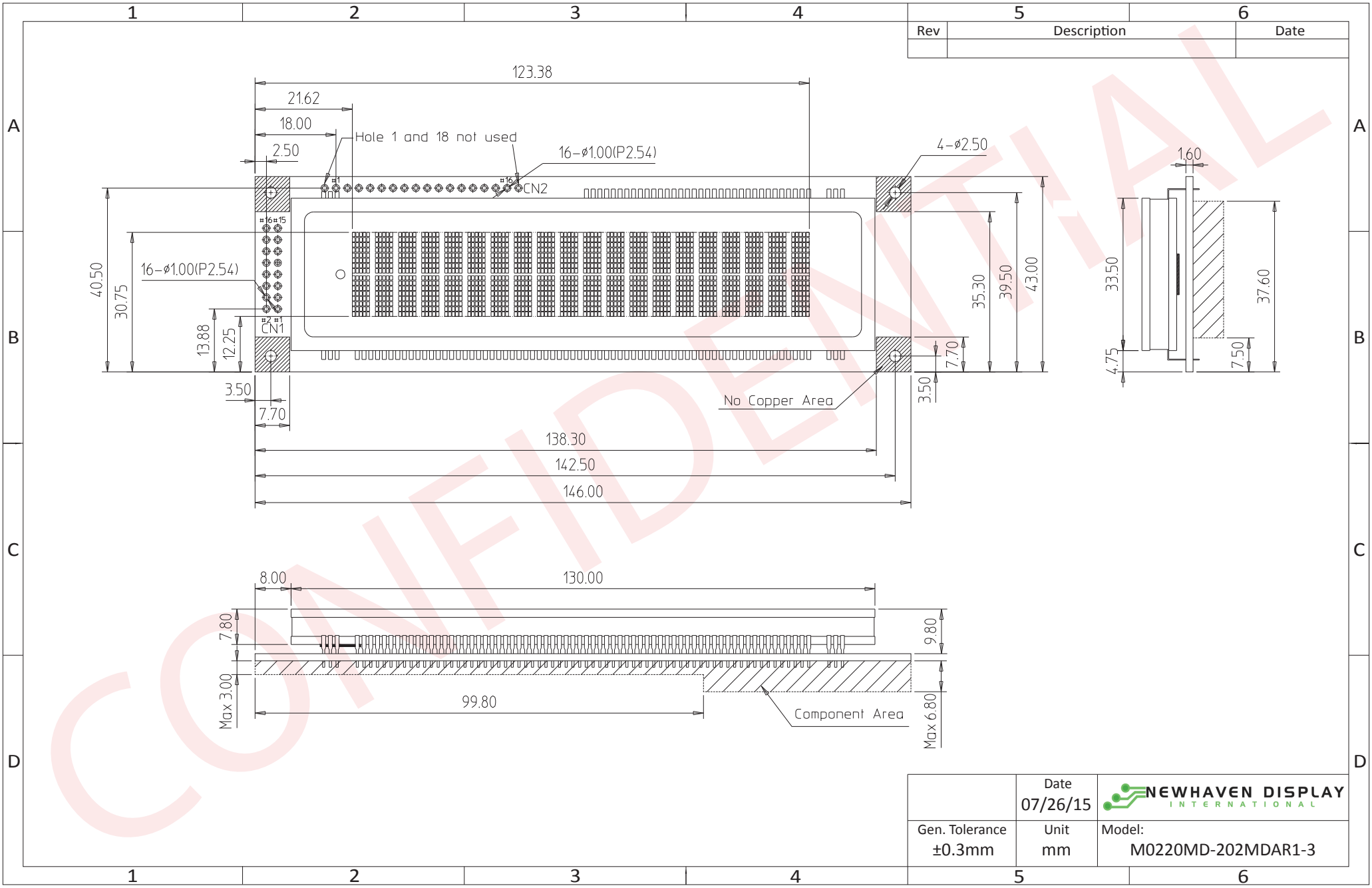

CONFIDENTIAL

The drawing contained herein is the exclusive property of Newhaven Display International, Inc. and shall not be copied, reproduced, and/or disclosed in any format without permission.

Pattern Detail

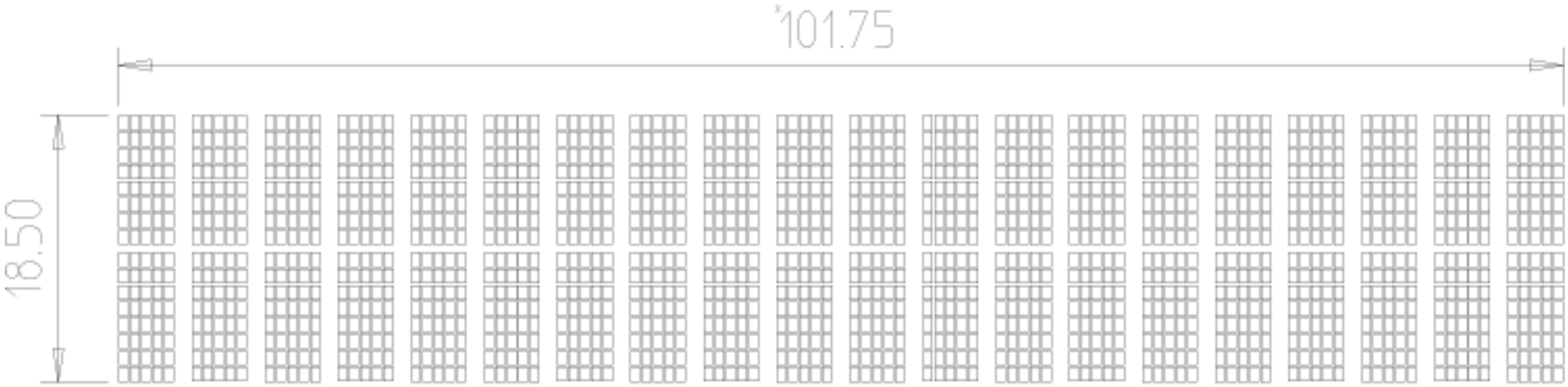

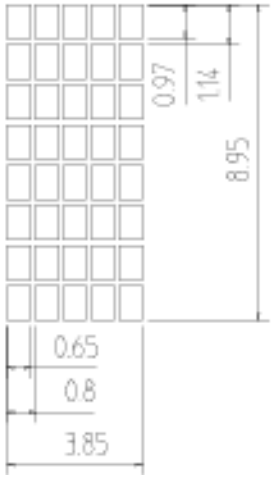

Pin Description

Parallel Interface (Default):

Pin No.	Symbol	External Connection	Function Description
1	VSS	Power Supply	Ground
2	VDD	Power Supply	Supply Voltage for logic (+5.0V)
3	NC (/RST)	- (MPU)	No Connect (if JP2 is short, PIN3 = Active LOW reset signal)
4	RS	MPU	Register Select signal RS=1: DATA RS=0: COMMAND
5	R/W	MPU	Read/Write select signal R/W=1: Read, R/W=0: Write
6	E	MPU	Operation Enable signal. Falling Edge Triggered
7-10	DB0 – DB3	MPU	Four low order bi-directional three-state data bus lines. These four are not used during 4-bit operation
11-14	DB4 – DB7	MPU	Four high order bi-directional three-state data bus lines.

Recommended LCD connector: 2.54mm pitch pins

Serial Interface:

Pin No.	Symbol	External Connection	Function Description
1	VSS	Power Supply	Ground
2	VDD	Power Supply	Supply Voltage for logic (+5.0V)
3	SI/SO	MPU	Serial Data In/Out signal
4	STB	MPU	Serial Strobe signal
5	NC	-	No Connect
6	SCK	MPU	Serial Clock signal
7-16	NC	-	No Connect

Jumper Settings

Mode	JP2	JP3	JP4	JP5	JP6	JP7
Serial	Open	Short	Open	Short	Open	Short
Parallel i80	*1	Open	Short	Open	Open	Short
Parallel M68 (default)	*1	Open	Short	Open	Short	Open

***1: JP2 short enables PIN3 as external reset. JP2 open disables reset.**

Block Diagram

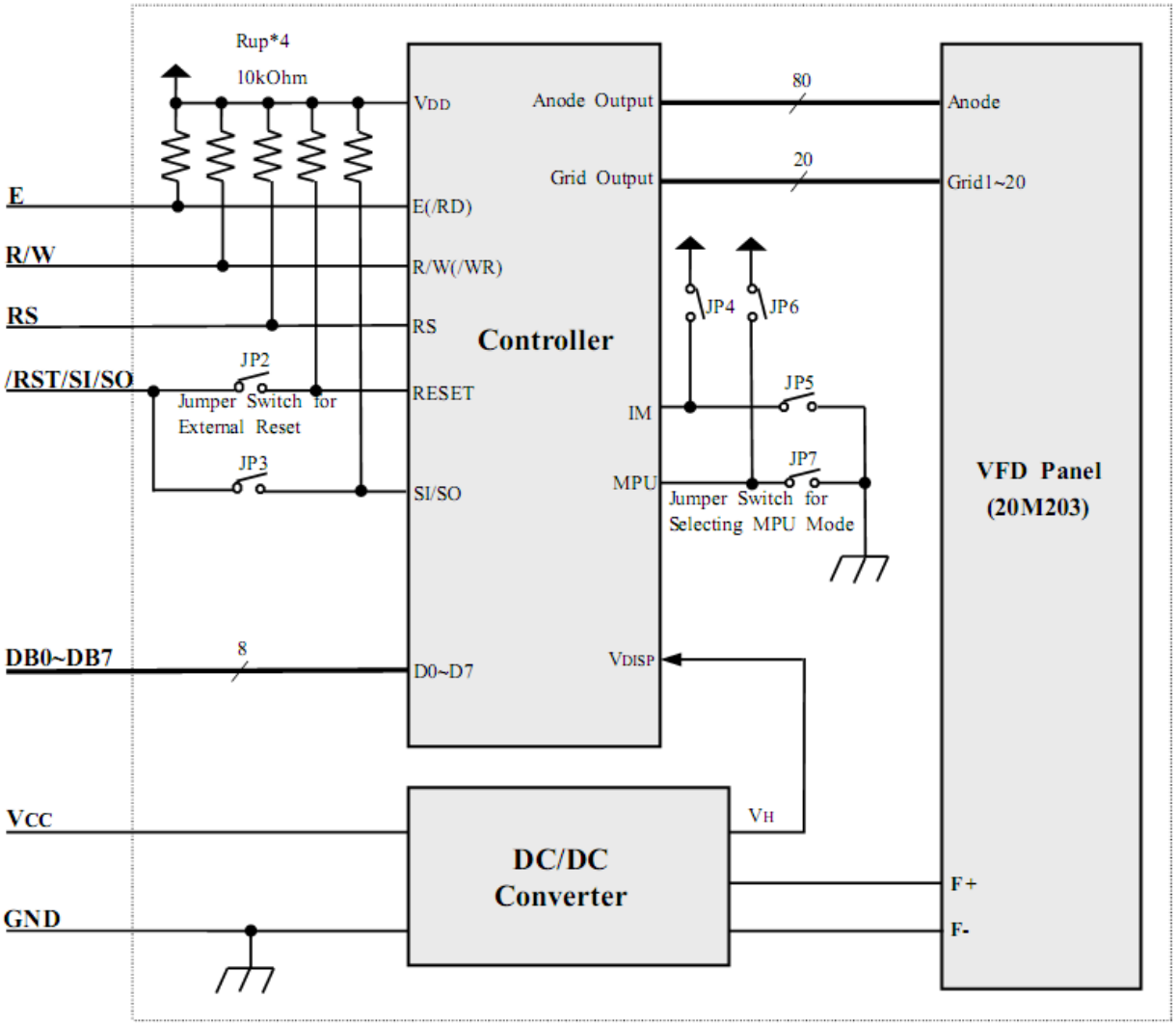

Electrical Characteristics

Item	Symbol	Condition	Min.	Typ.	Max.	Unit
Operating Temperature Range	Vop		-40	-	+85	^{o}C
Storage Temperature Range	Vst		-50	-	+95	^{o}C
Operating Humidity	Hop		0	-	85	%
Storage Humidity	Hst		0	-	90	%
Vibration	-	10~55Hz	-	-	4	G
Shock	-		-	-	40	G
Supply Voltage	VDD		4.5	5.0	5.5	V
Supply Current (*Note 1)	IDD	Ta=25°C VDD=5.0V	-	290	435	mA
Luminance	L		350 102	500 146	- -	cd/m^2 ft-L
“H” Level input (*Note 2)	Vih		0.7*VDD	-	-	V
“L” Level input	Vil		-	-	0.3*VDD	V
“H” Level output	Voh		0.8*VDD	-	-	V
“L” Level output	Vol		-	-	0.2*VDD	V

Note:

1. In-rush current can be approx. 10 times the specified supply current at power up.
2. A 10K ohm pull-up resistor is on each input signal for TTL compatibility.

Controller Information

Built-in PT6314 controller.
Please download specification at http://www.newhavendisplay.com/app_notes/PT6314.pdf

Table of Commands

Instructions	Control		Instruction Code								Descriptions
	RS	R/W	D7	D6	D5	D4	D3	D2	D1	D0	
Display Clear	0	0	0	0	0	0	0	0	0	1	Clears all display and sets DD-RAM address 0 in address counter.
Cursor Home	0	0	0	0	0	0	0	0	1	*	Sets DD-RAM address 0 in ACC. Also returns the display being shifted to the original position. DD-RAM contents remain unchanged.
Entry Mode Set	0	0	0	0	0	0	0	1	I/D	S	Sets the cursor direction and specifies display shift. These operations are performed during writing/reading data.
Display ON/OFF Control	0	0	0	0	0	0	1	D	C	B	Sets all display ON/OFF (D), cursor ON/OFF (C), cursor blink of character position (B).
Cursor or Display Shift	0	0	0	0	0	1	S/C	R/L	*	*	Shifts display or cursor, keeping DD-RAM contents.
Function Set	0	0	0	0	1	IF	N	*	BR1	BR0	Sets data length (IF), number of display lines(N), Set brightness level(BR1,BR0)
CG-RAM Address Set	0	0	0	1	ACG (CG-RAM Address)						Sets the CG-RAM address.
DD-RAM Address Set	0	0	1	ADD (DD-RAM Address)							Sets the DD-RAM address.
Busy Flag and Address Counter Reading	0	1	BF	ACC (Address Counter)							Reads busy flag (BF) and address counter (ACC).
Data Writing to CG- or DD-RAM	1	0	Character Code								Writes data into CG-RAM or DD-RAM.
Data Reading from CG- or DD-RAM	1	1	Character Code								Reads data from CG-RAM or DD-RAM.
REMARKS: * DD-RAM: Display Data RAM * CG-RAM: Character Generator RAM * ACG: CG-RAM Address * ADD: DD-RAM Address * ACC: Address Counter	* I/D = 1: Increment * I/D = 0: Decrement * S = 1: Display Shift Enabled * S = 0: Cursor Shift Enabled * S/C = 1: Display Shift * S/C = 0: Cursor Move * R/L = 1: Shift to the Right * R/L = 0: Shift to the Left										* IF = 1: 8-bit Operation * IF = 0: 4-bit Operation * N = 1: 2 Lines Display * N = 0: 1 Line Display * BR1, BR0 = 00: 100%, 01: 75%, 10: 50%, 11: 25% * BF = 1: Busy (Internally operating) * BF = 0: Not busy (Instruction acceptable)

Parallel Interface:

This VFD module can interface in either two 4-bit operations or one 8-bit operation. For 4-bit interface data, only four bus lines (DB4 to DB7) are used for transfer. When to use 4-bit parallel data transfer, DB0 to DB3 keep "H" or "L". The data transfer between the VFD module and the MPU is completed after the 4-bit data has been transferred twice. As for the order of data transfer the four high order bits (for 8-bit operation, DB4 to DB7) are transferred before the four low order bits (for 8-bit operation, DB0 to DB3). The busy flag (BF) are performed before transferring the higher 4 bits. BF checks are not required before transferring the lower 4 bits.

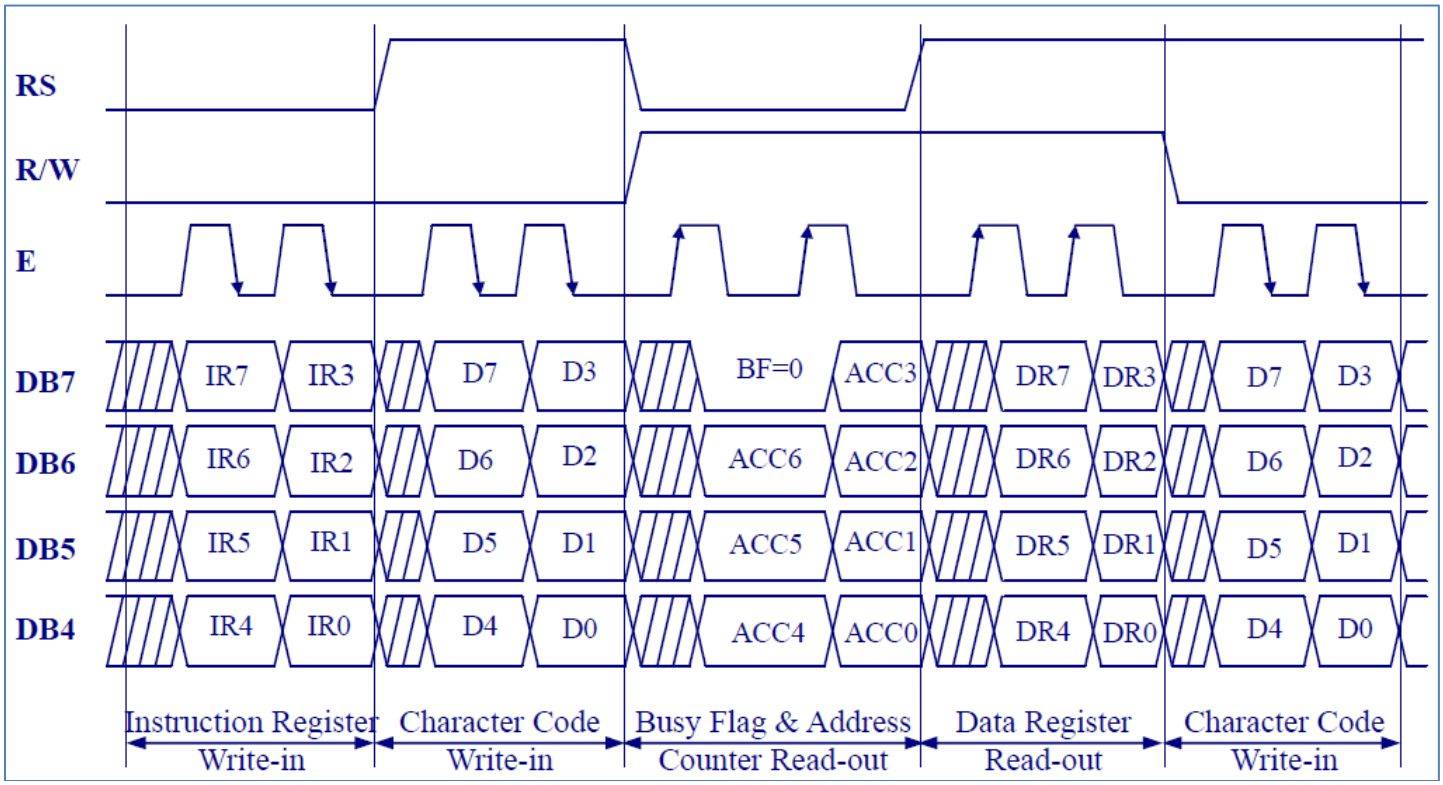

Serial Interface:

When data is written, it can be inputted when the STB goes to “0”. The first byte-Start Byte consists of a total 8 bits including Synchronous bits (bit 1-bit 5), R/W (bit 6), RS (bit 7) and bit 8. The register is selected (IR or DR) by RS(bit 7) while data write or read is selected by R/W (bit 6 =”0”). Next 8-bit instruction byte will follow closely after the defined operation in Start Byte. Data should be keep active in rising edge of clock while it would be output in falling edge in Read operation. Follow the protocol herein:

Serial Data Write:

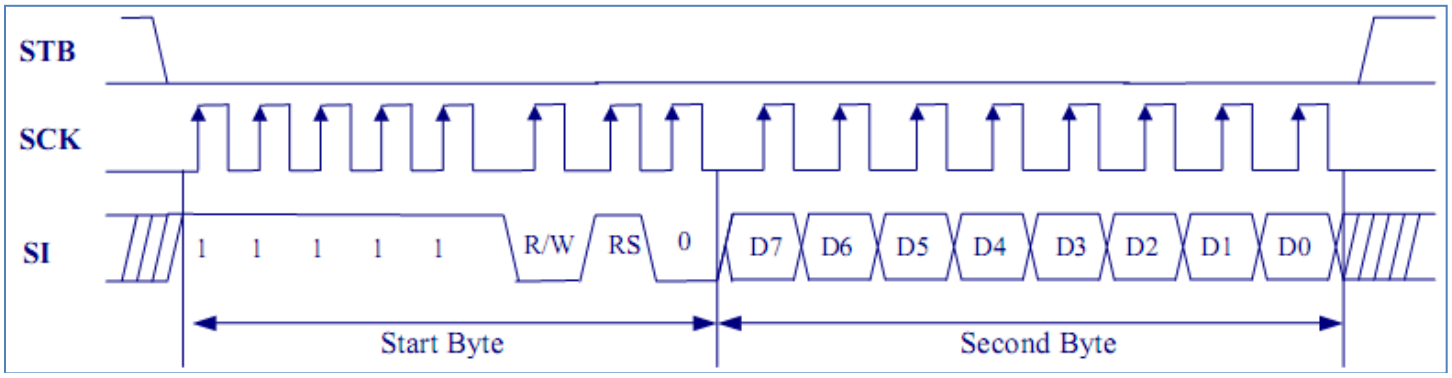

Serial Data Read:

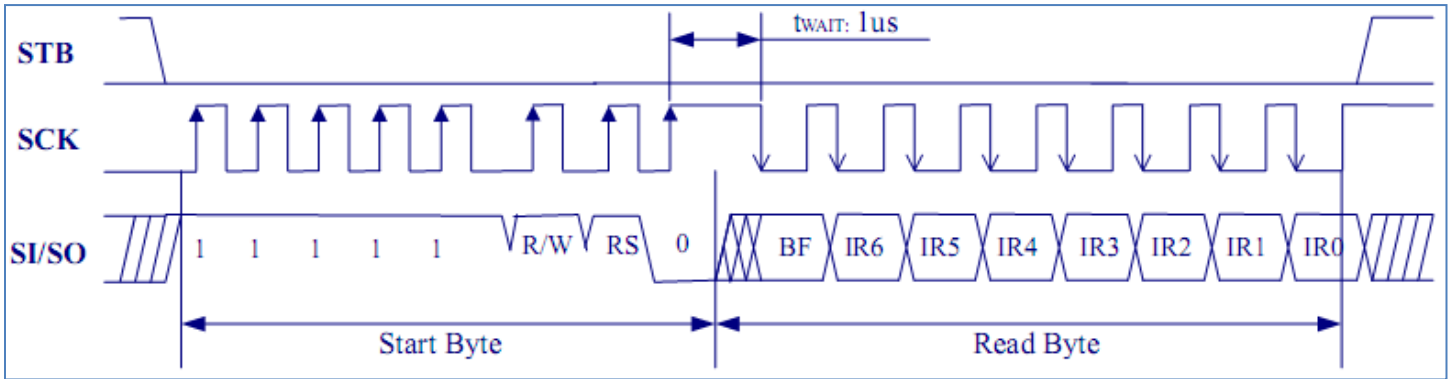

Timing Characteristics:

M68 Write Timing:

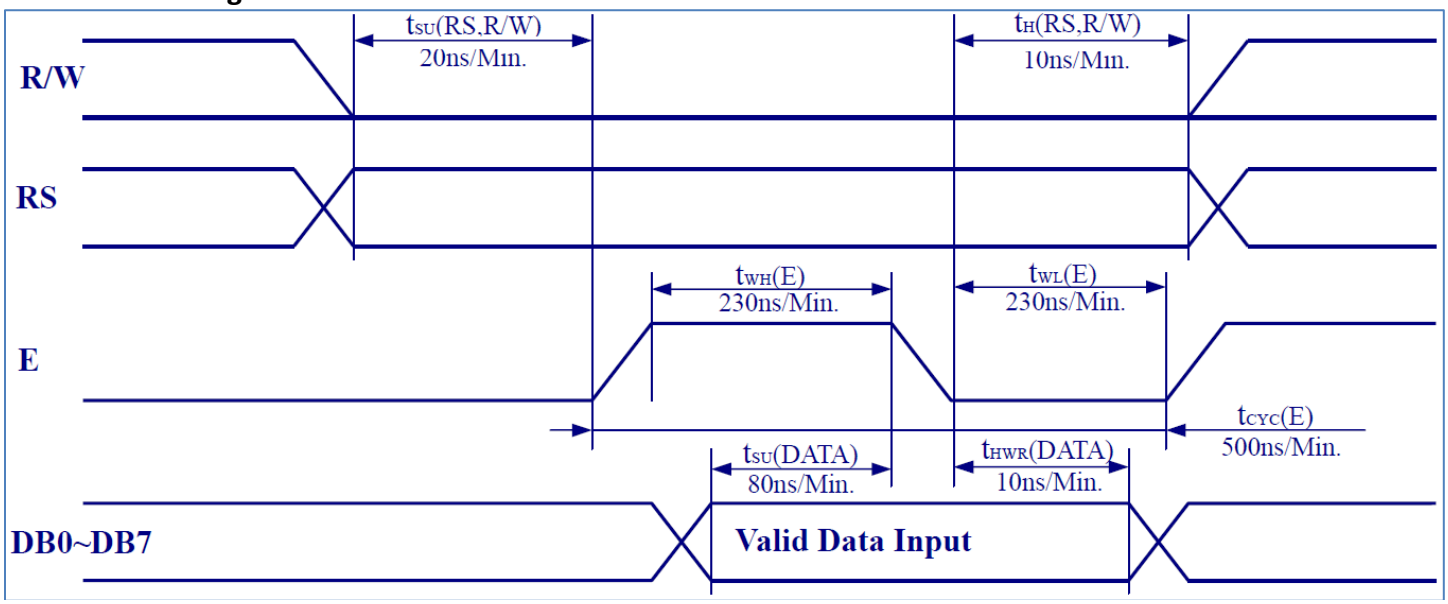

M68 Read Timing:

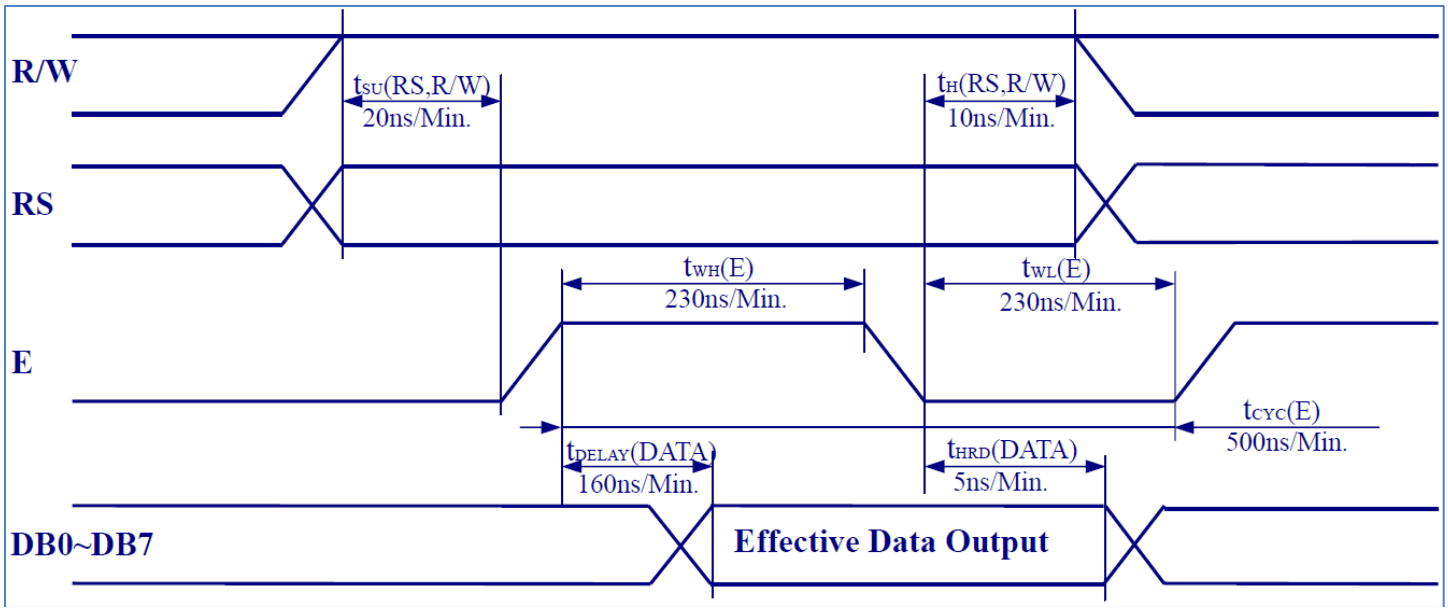

i80 Write Timing:

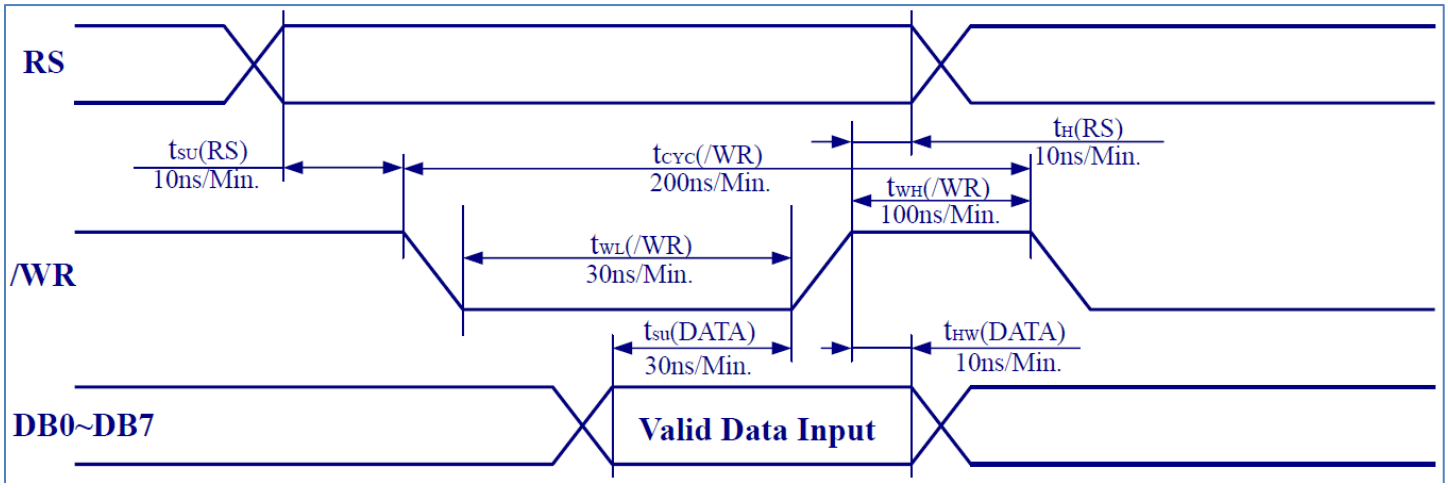

i80 Read Timing:

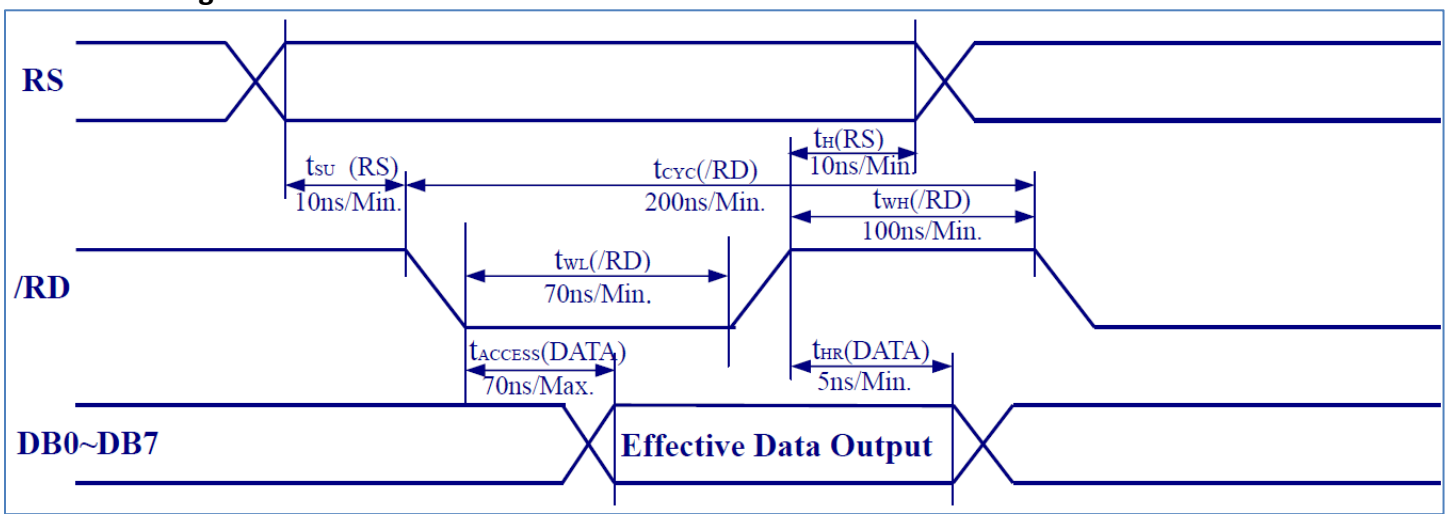

Power ON Timing:

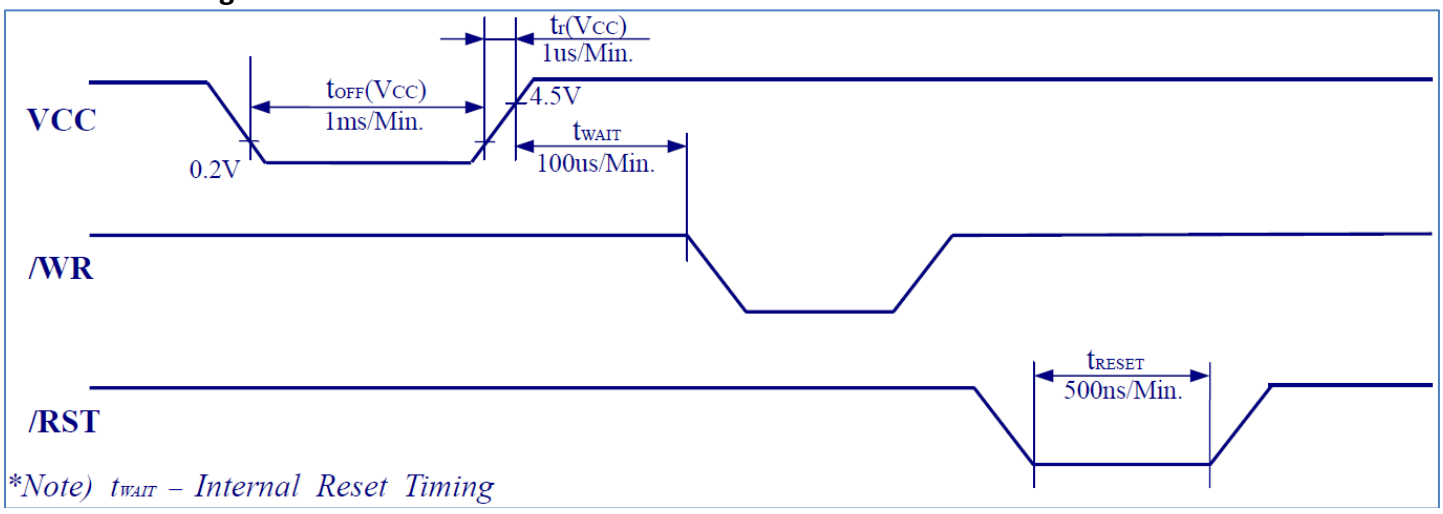

Serial Write Timing:

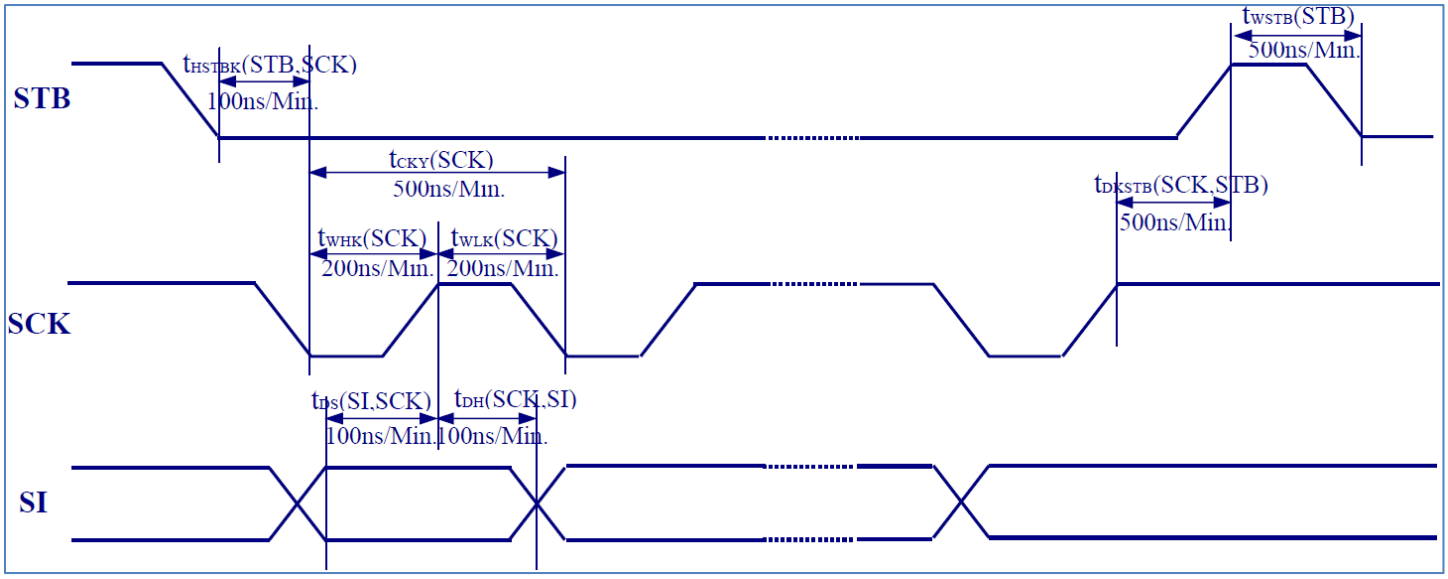

Serial Read Timing:

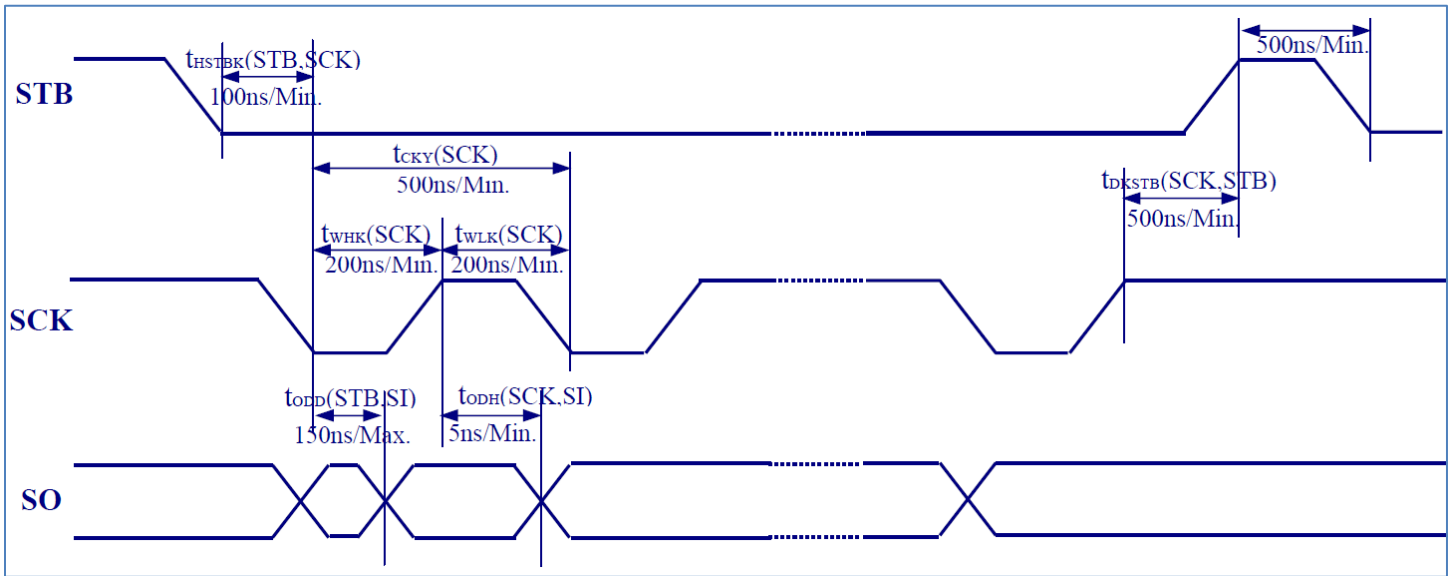

Built-in Font Table

Upper Nibble / Lower Nibble		D7	0	0	0	0	0	0	0	0	1	1	1	1	1	1	1	1
		D6	0	0	0	0	1	1	1	1	0	0	0	0	1	1	1	1
		D5	0	0	1	1	0	0	1	1	0	0	1	1	0	0	1	1
		D4	0	1	0	1	0	1	0	1	0	1	0	1	0	1	0	1
D3 D2 D1 D0			0	1	2	3	4	5	6	7	8	9	A	B	C	D	E	F
0 0 0 0	0	CG-RAM (#1)																
0 0 0 1	1	CG-RAM (#2)																
0 0 1 0	2	CG-RAM (#3)																
0 0 1 1	3	CG-RAM (#4)																
0 1 0 0	4	CG-RAM (#5)																
0 1 0 1	5	CG-RAM (#6)																
0 1 1 0	6	CG-RAM (#7)																
0 1 1 1	7	CG-RAM (#8)																
1 0 0 0	8	CG-RAM (#1)																
1 0 0 1	9	CG-RAM (#2)																
1 0 1 0	A	CG-RAM (#3)																
1 0 1 1	B	CG-RAM (#4)																
1 1 0 0	C	CG-RAM (#5)																
1 1 0 1	D	CG-RAM (#6)																
1 1 1 0	E	CG-RAM (#7)																
1 1 1 1	F	CG-RAM (#8)																

Example Initialization Sequence

RS	R/W	DB7	DB6	DB5	DB4	DB3	DB2	DB1	DB0	Description
Power ON										Wait for 100 us
0	0	0	0	1	1	1	*	0	0	Function set: - Data length: 8 bits - Display line No.: 2 lines - Brightness: 100%
0	0	0	1	0	0	0	0	0	0	CG-RAM address set to 00H
1	0	*	*	*	D	D	D	D	D	Writes data into CG-RAM (the user-definable characters) 64 bytes in total (8 characters)
		*	*	*	D	D	D	D	D	
		.....					.....			
		*	*	*	D	D	D	D	D	
0	0	1	0	0	0	0	0	0	0	DD-RAM address set to 00H (the first column of upper line)
1	0	D	D	D	D	D	D	D	D	Writes data into DD-RAM (choose the character codes to display in upper line) Totally 20 bytes in the upper line (20 characters)
		D	D	D	D	D	D	D	D	
		.....					.....			
		D	D	D	D	D	D	D	D	
0	0	1	1	0	0	0	0	0	0	DD-RAM address set to 40H (the first column of lower line)
1	0	D	D	D	D	D	D	D	D	Writes data into DD-RAM (choose the character codes to display in lower line) Totally 20 bytes in the lower line (20 characters)
		D	D	D	D	D	D	D	D	
		.....					.....			
		D	D	D	D	D	D	D	D	
0	0	0	0	0	0	1	1	0	0	Display ON, Cursor OFF, Cursor blink OFF

**Note): D is the binary data to be written-in.*

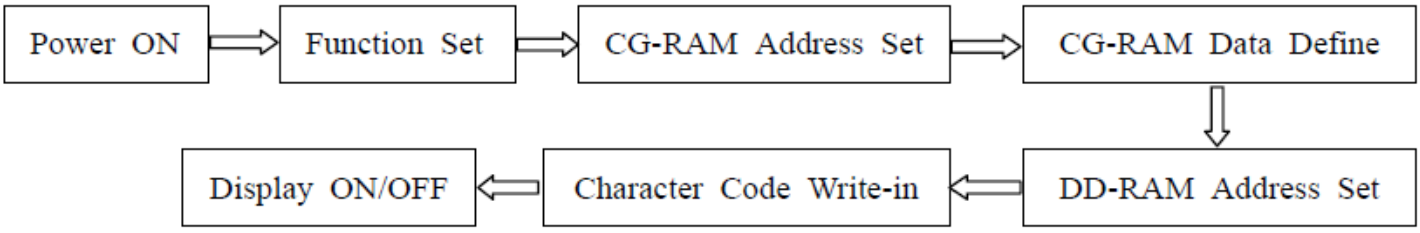

Quality Information

Test Item	Content of Test	Test Condition	Note
High Temperature storage	Endurance test applying the high storage temperature for a long time.	+80°C , 48hrs	2
Low Temperature storage	Endurance test applying the low storage temperature for a long time.	-30°C , 48hrs	1,2
High Temperature Operation	Endurance test applying the electric stress (voltage & current) and the high thermal stress for a long time.	+70°C 48hrs	2
Low Temperature Operation	Endurance test applying the electric stress (voltage & current) and the low thermal stress for a long time.	-20°C , 48hrs	1,2
High Temperature / Humidity Operation	Endurance test applying the electric stress (voltage & current) and the high thermal with high humidity stress for a long time.	+40°C , 90% RH , 48hrs	1,2
Thermal Shock resistance	Endurance test applying the electric stress (voltage & current) during a cycle of low and high thermal stress.	0°C,30min -> +25°C,5min -> +50°C,30min = 1 cycle 10 cycles	
Vibration test	Endurance test applying vibration to simulate transportation and use.	10-55Hz , 15mm amplitude. 60 sec in each of 3 directions X,Y,Z For 15 minutes	3
Static electricity test	Endurance test applying electric static discharge.	VS=800V, RS=1.5kΩ, CS=100pF One time	

Note 1: No condensation to be observed.
Note 2: Conducted after 4 hours of storage at 25°C, 0%RH.
Note 3: Test performed on product itself, not inside a container.

Precautions for using LCDs/LCMs

See Precautions at www.newhavendisplay.com/specs/precautions.pdf

Warranty Information and Terms & Conditions

http://www.newhavendisplay.com/index.php?main_page=terms