# Agilent E3632A
# DC Power Supply

## User's Guide

Agilent Technologies

sales@prom-elec.com / ООО ПРОМЭЛЕКТРОНИКА

# Notices

© Agilent Technologies, Inc. 1997–2013

No part of this manual may be reproduced in any form or by any means (including electronic storage and retrieval or translation into a foreign language) without prior agreement and written consent from Agilent Technologies, Inc. as governed by United States and international copyright laws.

## Manual Part Number

E3632-90001

## Edition

Sixth Edition, October 3, 2013

Agilent Technologies, Inc.
5301, Stevens Creek Blvd.
Santa Clara, CA 95051 USA

## Warranty

**The material contained in this document is provided "as is," and is subject to change, without notice, in future editions. Further, to the maximum extent permitted by the applicable law, Agilent disclaims all warranties, either express or implied, with regard to this manual and any information contained herein, including but not limited to the implied warranties of merchantability and fitness for a particular purpose. Agilent shall not be liable for errors or for incidental or consequential damages in connection with the furnishing, use, or performance of this document or of any information contained herein. Should Agilent and the user have a separate written agreement with warranty terms covering the material in this document that conflict with these terms, the warranty terms in the separate agreement shall control.**

## Technology Licenses

The hardware and or software described in this document are furnished under a license and may be used or copied only in accordance with the terms of such license.

## Restricted Rights Legend

U.S. Government Restricted Rights. Software and technical data rights granted to the federal government include only those rights customarily provided to end user customers. Agilent provides this customary commercial license in Software and technical data pursuant to FAR 12.211 (Technical Data) and 12.212 (Computer Software) and, for the Department of Defense, DFARS 252.227-7015 (Technical Data - Commercial Items) and DFARS 227.7202-3 (Rights in Commercial Computer Software or Computer Software Documentation).

## Safety Notices

**CAUTION**

A **CAUTION** notice denotes a hazard. It calls attention to an operating procedure, practice, or the likes of that, if not correctly performed or adhered to, could result in damage to the product or loss of important data. Do not proceed beyond a **CAUTION** notice until the indicated conditions are fully understood and met.

**WARNING**

**A WARNING notice denotes a hazard. It calls attention to an operating procedure, practice, or the likes of that, if not correctly performed or adhered to, could result in personal injury or death. Do not proceed beyond a WARNING notice until the indicated conditions are fully understood and met.**

## Safety Symbols

The following symbols on the instrument and in the documentation indicate precautions which must be taken to maintain safe operation of the instrument.

| | | | |
|---|---|---|---|
| ⚠ | Caution, risk of danger (refer to this manual for specific Warning or Caution information) | | In position of a bi-stable push control |
| ⎓ | DC (Direct current or voltage) | ⊥ | Terminal is at earth potential. Used for measurement and control circuits designed to be operated with one terminal at earth potential. |
| ∼ | AC (Alternating current or voltage) | + | Positive binding post |
| ⏚ | Protective conductor terminal | − | Negative binding post |
| | Out position of a bi-stable push control | ⏚ | Earth (ground) terminal |

## Safety Considerations

Read the information below before using this instrument.

The following general safety precautions must be observed during all phases of operation, service, and repair of this instrument. Failure to comply with these precautions or with specific warnings elsewhere in this manual violates safety standards for design, manufacture, and intended use of the instrument. Agilent Technologies assumes no liability for the customer's failure to comply with these requirements.

**CAUTION**

- Use the device with the cables provided with the shipment.
- If the device is used in a manner not specified by the manufacturer, the device protection may be impaired.
- Always use a dry cloth to clean the device. Do not use ethyl alcohol or any other volatile liquid to clean the device.
- Do not permit any blockage of the ventilation holes of the device.

**WARNING**

- **Do not use MAINS supply cords by inadequately RATED cord. Always use the MAINS supply cord provided by the manufacturer.**
- **Do not use the device if it appears damaged or defective. REMOVE POWER and do not use the device until safe operation is verified by service-trained personnel. If necessary, return the device to Agilent for service and repair to ensure that the safety features are maintained.**
- **Do not operate the device around flammable gases or fumes, vapor, or wet environments.**
- **Observe all markings on the device before connecting any wiring to the device.**
- **Turn off the output of the power supply before connecting to the output terminals.**
- **When servicing the device, use only the specified replacement parts.**
- **Do not install substitute parts or perform any unauthorized modification to the device. Return the device to Agilent for service and repair to ensure that the safety features are maintained.**
- **Do not operate the device with the cover removed or loosened.**

This power supply is a Safety Class I instrument, which means that it has a protective earth terminal. This terminal must be connected to earth ground through a power source with a 3-wire ground receptacle.

Before installation or operation, check the power supply and review this manual for safety markings and instructions. Safety information for specific procedures is located at the appropriate places in this manual.

## Safety and EMC Requirements

This power supply is designed to comply with the following safety and Electromagnetic Compatibility (EMC) requirements:

- IEC61326-1:2005/EN61326-1:2006
- Canada: ICES/NMB-001: Issue 4, June 2006
- Australia/New Zealand: AS/NZS CISPR11:2004
- IEC 61010-1:2001/EN 61010-1:2001
- Canada: CAN/CSA-C22.2 No. 61010-1-04
- USA: ANSI/UL 61010-1:2004

## Environmental Conditions

This instrument is designed for indoor use and in an area with low condensation. The table below shows the general environmental requirements for this instrument.

| Environmental condition | Requirements |
|---|---|
| Temperature | Operating condition<br>• 0 °C to 40 °C (full rated output)<br>Storage condition<br>• –20 °C to 70 °C |
| Humidity | Up to 80% RH |
| Altitude | Up to 2000 m |
| Installation category | II (for indoor use) |
| Pollution degree | 2 |

## Regulatory Markings

| | | | |
|---|---|---|---|
| CE ISM 1-A | The CE mark is a registered trademark of the European Community. This CE mark shows that the product complies with all the relevant European Legal Directives. | N10149 | The C-tick mark is a registered trademark of the Spectrum Management Agency of Australia. This signifies compliance with the Australia EMC Framework regulations under the terms of the Radio Communication Act of 1992. |
| ICES/NMB-001 | ICES/NMB-001 indicates that this ISM device complies with the Canadian ICES-001.<br>Cet appareil ISM est confomre a la norme NMB-001 du Canada. | | This instrument complies with the WEEE Directive (2002/96/EC) marking requirement. This affixed product label indicates that you must not discard this electrical or electronic product in domestic household waste. |
| C US | The CSA mark is a registered trademark of the Canadian Standards Association. | 40 | This symbol indicates the time period during which no hazardous or toxic substance elements are expected to leak or deteriorate during normal use. Forty years is the expected useful life of the product. |
| | This symbol is a South Korean Class A EMC Declaration. This is a Class A instrument suitable for professional use and in electromagnetic environment outside of the home. | | |

# Waste Electrical and Electronic Equipment (WEEE) Directive 2002/96/EC

This instrument complies with the WEEE Directive (2002/96/EC) marking requirement. This affixed product label indicates that you must not discard this electrical or electronic product in domestic household waste.

**Product Category:**

With reference to the equipment types in the WEEE directive Annex 1, this instrument is classified as a “Monitoring and Control Instrument” product.

The affixed product label is as shown below.

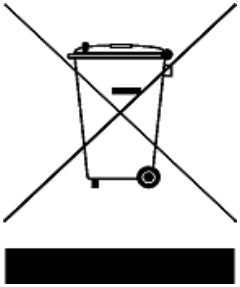

**Do not dispose in domestic household waste.**

To return this unwanted instrument, contact your nearest Agilent Service Center, or visit

www.agilent.com/environment/product

for more information.

# Declaration of Conformity (DoC)

The Declaration of Conformity (DoC) for this instrument is available on the Agilent Web site. You can search the DoC by its product model or description at the Web address below.

http://regulations.corporate.agilent.com/DoC/search.htm

**NOTE** If you are unable to search for the respective DoC, contact your local Agilent representative.

THIS PAGE HAS BEEN INTENTIONALLY LEFT BLANK.

# Table of Contents


## 1 Getting Started

Introduction 2

Standard Shipped Items 7

- Options 7
- Accessories 8

Preparing the Power Supply 9

- Preliminary checkout 9
- Power-on checkout 10
- Checking the output 11
- Input power requirements 13
- Rack-mount the power supply 16

Product at a Glance 18

- Front panel 18
- Rear panel 21
- Display annunciators 22

Operating the Power Supply 24

- Cooling 24
- Bench operation 24
- Cleaning 24

## 2 Operation and Features

Overview 26

Constant Voltage Operation 28

- Front panel operation 28
- Remote interface operation 30

Constant Current Operation 30

- Front panel operation 30
- Remote interface operation 32

Storing and Recalling Operating States 33
Front panel operation 33
Remote interface operation 35
Programming the Overvoltage Protection 35
Front panel operation 35
Remote interface operation 37
Programming the Overcurrent Protection 38
Front panel operation 38
Remote interface operation 40
Remote Voltage Sensing 41
CV regulation 41
Output rating 42
Output noise 42
Stability 42
Remote voltage sensing connections 43
Disabling the Output 44
Front panel operation 44
Remote interface operation 44
Disconnecting the output using an external relay 45
Knob locking 45
System-Related Operations 46
Self-test 46
Error conditions 47
Display control 48
Firmware revision query 49
SCPI language version 49
Remote Interface Configuration 51
Remote interface selection 51
GPIB address 52
Baud rate selection (RS-232) 52

Parity selection (RS-232) 53
To set the GPIB address 53
To set the baud rate and parity (RS-232) 54

GPIB Interface Configuration 56

RS-232 Interface Configuration 57
RS-232 configuration overview 57
RS-232 data frame format 58
Connection to a computer or terminal 58
DTR/DSR handshake protocol 60
RS-232 troubleshooting 62

Calibration 63
Calibration security 63
To unsecure for calibration 64
To secure against calibration 65
To change the security code 66
Calibration count 67
Calibration message 68

3 Remote Interface Reference

SCPI Command Summary 70

Introduction to the SCPI Language 74
Command format used in this manual 75
Command separators 76
Using the MIN and MAX parameters 77
Querying parameter settings 77
SCPI command terminators 78
IEEE-488.2 common commands 78
SCPI parameter types 78

Simplified Programming Overview 80
Using the APPLy command 80
Using the low-level commands 80

Reading a query response 81
Selecting a trigger source 81
Power supply programming ranges 82

Using the APPLy Command 83
APPLy {<voltage>| DEF | MIN | MAX}[,{<current>| DEF | MIN | MAX}] 83
APPLy? 84

Output Settings and Operation Commands 85

Triggering Commands 93
Trigger source choices 93
Triggering commands 95

System-Related Commands 96

Calibration Commands 102

RS-232 Interface Commands 106

SCPI Status Registers 107
What is an event register? 107
What is an enable register? 107
SCPI status system 108
The Questionable Status register 109
The Standard Event register 110
The Status Byte register 112
Using Service Request (SRQ) and Serial POLL 113
Using *STB? to read the Status Byte 114
Using the Message Available Bit (MAV) 114
To interrupt your bus controller using SRQ 115
To determine when a command sequence is completed 115
Using *OPC to signal when data is in the output buffer 116

Status Reporting Commands 117

Halting an Output in Progress 121

SCPI Conformance Information 122
SCPI confirmed commands 122
Device-specific commands 124
IEEE-488 Conformance Information 125
Dedicated hardware lines 125
Addressed commands 125
IEEE-488.2 common commands 126

4 Error Messages

Overview 128
Front panel operation 128
Remote interface operation 129
Execution Error Messages 130
Self-Test Error Messages 135
Calibration Error Messages 137

5 Application Programs

Overview 140
Example Program for C++ (GPIB IEEE 488) 141
Example Program for Excel 5.0 (Windows 3.1 and GPIB) 144

6 Tutorial

Overview of the Power Supply Operation 150
Output Characteristics 152
Unregulated state 154
Unwanted signals 154
Connecting the Load 157
Output isolation 157
Multiple loads 157

Remote voltage sensing 158
Load consideration 159
Extending the Voltage Range and Current Range 162
Series connections 162
Parallel connections 163
Remote Programming 164
Reliability 166

## 7 Characteristics and Specifications

Physical Characteristics 168
Environmental Characteristics 169
Electrical Specifications 169
Supplemental Characteristics 171

# List of Figures


Figure 1-1 Shorting conductors without insulation 5
Figure 1-2 Front panel 18
Figure 1-3 Voltage and current limit settings 20
Figure 1-4 Rear panel 21
Figure 1-5 Display annunciators 22
Figure 2-1 Recommended protection circuit for battery charging 38
Figure 2-2 Remote voltage sensing connections 43
Figure 2-3 RS-232 data frame format 58
Figure 2-4 DB-9 serial connection 59
Figure 2-5 DB-25 serial connection 60
Figure 3-1 SCPI status system 108
Figure 6-1 Diagram of a simple series power supply with tap selection 150
Figure 6-2 Block diagram of the power supply showing the remote interface isolation 151
Figure 6-3 Ideal constant voltage power supply 152
Figure 6-4 Ideal constant current power supply 152
Figure 6-5 Output characteristics 153
Figure 6-6 Simplified diagram of the common mode and normal mode sources of noise 156
Figure 6-7 Regulated power supply with remote sensing 159
Figure 6-8 Speed of response — programming up (full load) 164
Figure 6-9 Speed of response — programming down 165
Figure 7-1 E3632A dimensions 168

THIS PAGE HAS BEEN INTENTIONALLY LEFT BLANK.

# List of Tables

Table 1-1 E3632A options 7
Table 1-2 E3632A accessories 8
Table 1-3 Front panel overview 18
Table 1-4 Rear panel overview 21
Table 1-5 Display annunciators overview 22
Table 3-1 SCPI command summary 71
Table 3-2 Agilent E3632A programming ranges 82
Table 3-3 Power supply state 99
Table 3-4 Bit definitions — Questionable Status register 109
Table 3-5 Bit definitions — Standard Event register 110
Table 3-6 Bit definitions — Status Byte summary register 112
Table 3-7 SCPI confirmed commands 122
Table 3-8 Non-SCPI commands 124
Table 4-1 Execution error messages 130
Table 4-2 Self-test error messages 135
Table 4-3 Calibration error messages 137
Table 6-1 Wire rating 158
Table 6-2 Slew rate 160
Table 7-1 Physical characteristics 168
Table 7-2 Electrical specifications 169
Table 7-3 Supplemental characteristics 171

THIS PAGE HAS BEEN INTENTIONALLY LEFT BLANK.

# 1
# Getting Started

Introduction 2
Standard Shipped Items 7
Preparing the Power Supply 9
Product at a Glance 18
Operating the Power Supply 24

This chapter guides you to set up your power supply for the first time. An introduction to all the features of the power supply is also given.

# Introduction

The Agilent E3632A is a high performance 120 W dual range DC power supply with GPIB and RS-232 interfaces. The combination of bench-top and system features in this power supply provides versatile solutions for your design and test requirements.

### Convenient bench-top features

- Dual range
- Easy-to-use knob control settings
- Highly visible vacuum-fluorescent display meters
- High accuracy and high resolution
- Remote voltage sensing
- Overvoltage and overcurrent protection
- Output on/off
- Excellent load and line regulation and low ripple and noise
- Operating states storage
- Portable, ruggedized case with non-skid feet

### Flexible system features

- GPIB (IEEE-488) and RS-232 interfaces are standard
- SCPI (Standard Commands for Programmable Instruments) compatibility
- I/O setup easily done from front-panel
- Software calibration, no internal adjustments required

The E3632A DC power supply features a combination of programming capabilities and linear power supply performance that makes it ideal for power systems applications. The power supply is programmable locally from the front panel or remotely over the GPIB and RS-232 interfaces. This power supply has two ranges, allowing more voltage at a lower current. The desired output range is selected from the front panel or over the remote interfaces.

## Operational features

- Dual range of 15 V/7 A or 30 V/4 A
- Constant voltage (CV) or constant current (CC) operation
- Overvoltage protection (OVP) and overcurrent protection (OCP)
- Three storage locations (1 to 3) for user-defined operating states
- Automatic power-on self-test
- Remote sensing for load voltage
- User calibration from the front panel or via the remote interfaces

## Front panel operations

- Easy-to-use knob control
- Output range selection
- Enabling or disabling OVP and OCP features
- Setting the OVP and OCP trip levels
- Clearing OVP and OCP conditions
- Setting and displaying the voltage and current limit values
- Saving and recalling operating states
- Returning the power supply to local mode from remote interface mode
- Displaying remote interface error message
- Calibrating the power supply, including changing the calibration security code

- Configuring the power supply for remote interfaces
- Enabling or disabling the output

When operated over the remote interface, the power supply can be both a listener and a talker. Using an external controller, you can instruct the power supply to set the output and to send the status data back over the GPIB or RS-232 interfaces. Capabilities include the following features:

- Voltage and current programming
- Voltage and current readback
- Present and stored status readback
- Programming syntax error detection
- Complete self-test

The front-panel Vacuum-Fluorescent Display (VFD) includes:

- Displaying actual values of output voltage and current (meter mode)
- Or displaying the limit values of voltage and current (limit mode)
- Checking the operating status from the annunciators
- Checking the type of error from the error codes (messages)

Connections to the power supply's output and to chassis ground are made to binding posts on the front panel.

**WARNING** **Floating the power supply output more than ±60 Vdc from the chassis presents an electric shock hazard to the operator. Do not float the outputs more than ±60 Vdc when metal shorting bars without insulation are used to connect the (+) output to the (+) sense and the (–) output to the (–) sense terminals.**

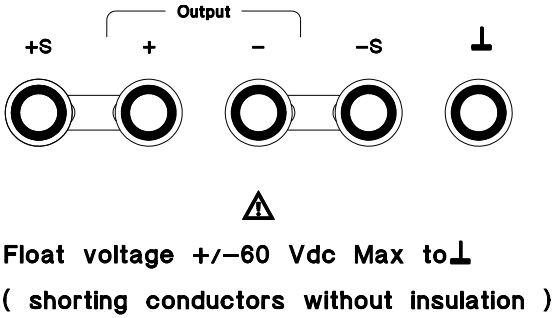


**Figure 1-1** Shorting conductors without insulation

**WARNING** **Outputs can be floated to maximum of ±240 Vdc provided that the metal shorting bars without insulation are either replaced with insulated conductors or they are removed from the terminals so there is no operator access to the output conductors without insulation. All field wiring insulation must be adequate for the voltage present.**

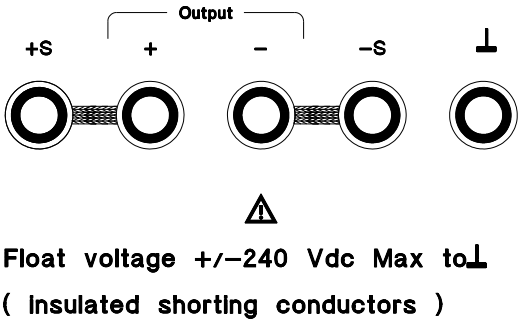

The power supply is shipped with a detachable, 3-wire grounding type power cord. The AC line fuse is an extractor type on the rear panel. The power supply can be calibrated from the front panel directly or with a controller over the GPIB or RS-232 interface using calibration commands. Correction factors are stored in non-volatile memory and are used during output programming. Calibration from the front panel or a controller eliminates the need to remove the top cover or even the need to remove the power supply from your system cabinet. You can guard against unauthorized calibration by using the “Secured” calibration protection function.

# Standard Shipped Items

Verify that you have received the following items in the shipment of your power supply. If anything is missing or damaged, contact your nearest Agilent Sales Office.

- ✔ Power cord
- ✔ Certificate of Calibration
- ✔ E3632A User's Guide (this manual)
- ✔ E3632A Service Guide (E3632-90010)

## Options

Options 0EM, 0E3, and 0E9 determine which power-line voltage is selected at the factory. The standard unit is configured for 115 Vac ±10%, 47 Hz to 63 Hz input voltage.

For more information about changing the power-line voltage setting, refer to "Power-line voltage selection" on page 14.

**Table 1-1** E3632A options

| Option | Description |
|---|---|
| 0EM | 115 Vac ±10%, 47 Hz to 63 Hz input voltage |
| 0E3 | 230 Vac ±10%, 47 Hz to 63 Hz input voltage |
| 0E9 | 100 Vac ±10%, 47 Hz to 63 Hz input voltage |
| 1CM | Rack-mount kit (Agilent part number 5063-9243) |
| OL2 | Extra English manual set (local language manual files are included in the CD-ROM, Agilent part number 5964-8251) |

## Accessories

The accessories listed below may be ordered from your local Agilent Sales Office either with the power supply or separately.

**Table 1-2** E3632A accessories

| Part number | Description |
|---|---|
| 10833A | GPIB cable, 1 m (3.3 ft.) |
| 10833B | GPIB cable, 2 m (6.6 ft.) |
| 34398A | • RS-232, 9 pin (f) to 9 pin (f), 2.5 m (8.2 ft.) cable<br>• 9 pin (f) to 25 pin (m) adapter |

# Preparing the Power Supply

## Preliminary checkout

1. *Verify the power- line voltage setting on the rear panel.*

   The power-line voltage is set to the proper value for your country when the power supply is shipped from the factory. Change the voltage setting if it is not correct. The settings are 100 Vac, 115 Vac, or 230 Vac.

2. *Verify that the correct power- line fuse is installed.*

   The correct fuse is installed for your country when the power supply is shipped from the factory. For 100 Vac or 115 Vac operation, you must use a 4 AT fuse. For 230 Vac operation, you must use a 2.5 AT fuse.

3. *Connect the power- line cord and turn on your power supply.*

   The front-panel display will light up and a power-on self-test occurs automatically when you turn on the power supply.

**NOTE**

- Refer to "Power-line voltage selection" on page 14 if you need to change the power-line voltage or the power-line fuse.
- To replace the 4 AT fuse, order Agilent part number 2110-0996.
- To replace the 2.5 AT fuse, order Agilent part number 2110-0999.

## Power-on checkout

The power-on test includes an automatic self-test that checks the internal microprocessors and allows the user visually check the display. You will observe the following sequence on the display after pressing the front panel power switch to on.

1 *All segments of the display including all annunciators will turn on for about one second.*

To review the annunciators, hold down Display Limit as you turn on the power supply.

2 *The GPIB address or RS- 232 message will then be displayed for about one second.*

**ADDR 5 (or RS-232)**

The GPIB address is set to "5" when the power supply is shipped from the factory for remote interface configuration. If this is not the first time the power supply is turned on, a different interface (RS-232) or a different GPIB address may appear.

**NOTE** Refer to Chapter 3, "Remote Interface Reference" if you need to change the remote interface configuration.

3 *The **15V**, **OVP**, **OCP**, and **OFF** annunciators are on. All others are off.*

The power supply will go into the power-on/reset state, the output is disabled (the OFF annunciator turns on), the 15 V/7 A range is selected (the **15V** annunciator turns on), and the knob is selected for voltage control. Notice that the **OVP** and **OCP** annunciator also turn on.

Output On/Off

4 *Enable the outputs.*

Press Output On/Off to enable the output. The **OFF** annunciator turns off and the **15V**, **OVP**, **OCP**, and **CV** annunciators are lit. The blinking digit can be adjusted by turning the knob. Notice that the display is in the meter mode. Meter mode means that the display shows the actual output voltage and current.

**NOTE** If the power supply detects an error during power-on self-test, the **ERROR** annunciator will turn on. Refer to Chapter 4, "Error Messages".

## Checking the output

The following procedures check to ensure that the power supply develops its rated outputs and properly responds to operation from the front panel. For complete performance and verification tests, refer to the *Service Guide (E3632- 90010)*.

**NOTE** For each step, use the keys shown on the left margins.

### Voltage output check

The following steps verify the basic voltage functions with no load.

Power

**1** *Turn on the power supply.*

The power supply will go into the power-on/reset state, the output is disabled (the OFF annunciator turns on), the 15 V/7 A range is selected (the **15V** annunciator turns on), and the knob is selected for voltage control.

Output On/Off

**2** *Enable the outputs.*

The **OFF** annunciator turns off and the **15V**, **OVP**, **OCP**, and **CV** annunciators are lit. The blinking digit can be adjusted by turning the knob. Notice that the display is in the meter mode. Meter mode means that the display shows the actual output voltage and current.

3 *Check that the front- panel voltmeter properly responds to knob control for the 15 V/7 A range.*

Turn the knob clockwise or counter-clockwise to check that the voltmeter responds to knob control and the ammeter indicates nearly zero.

4 *Ensure that the voltage can be adjusted from zero to the full rated value .*[1]

Adjust the knob until the voltmeter indicates 0 V, and then adjust the knob until the voltmeter indicates 15.0 V.

### Current output check

The following steps check the basic current functions with a short across the power supply's output.

Power

1 *Turn on the power supply.*

The power supply will go into the power-on/reset state, the output is disabled (the **OFF** annunciator turns on), the 15 V/7 A range is selected (the **15V** annunciator turns on), and the knob is selected for voltage control.

2 *Connect a short across the (+) and (–) output terminals with an insulated test lead.*

Output On/Off

3 *Enable the output.*

The **OFF** annunciator turns off and the **15V**, **OVP**, and **OCP** annunciators are lit. The **CV** or **CC** annunciator turns on depending on the resistance of the test lead. The blinking digit can be adjusted by turning the knob. Notice that the display is in the meter mode. Meter mode means that the display shows the actual output voltage and current.

Display Limit

4 *Adjust the voltage limit value to 1.0 V.*

Set the display to the limit mode (the **Limit** annunciator will be flashing). Adjust the voltage limit to 1.0 V to assure CC operation. The **CC** annunciator will turn on.

[1] You can use the resolution selection keys to move the flashing digit to the right or left when setting the voltage.

Volt/Curr

**5** *Check that the front- panel ammeter properly responds to knob control for the 15 V/7 A range.*

Set the knob to the current control, and turn the knob clockwise or counter-clockwise when the display is in the meter mode (the **Limit** annunciator is off). Check that the ammeter responds to knob control and the voltmeter indicates nearly zero (the voltmeter will show the voltage drop caused by the test lead).

**6** *Ensure that the current can be adjusted from zero to the full rated value.*[1]

**NOTE** If an error has been detected during the output checkout procedures, the **ERROR** annunciator will turn on. Refer to Chapter 4, "Error Messages".

## Input power requirements

You can operate your power supply from a nominal 100 V, 115 V, or 230 V single phase AC power source at 47 Hz to 63 Hz. An indication on the rear panel shows the nominal input voltage set for the power supply at the factory. If necessary, you can change the power-line voltage setting according to the instructions as shown in "Power-line voltage selection" on page 14.

### Power-line cord

The power supply is shipped from the factory with a power-line cord that has a plug appropriate for your location. Contact the nearest Agilent Sales and Service Office if the wrong power-line cord is included with your power supply. Your power supply is equipped with a 3-wire grounding type power cord where the third conductor is the ground. The power supply is grounded only when the power-line cord is plugged into an appropriate receptacle. Do not operate your power supply without adequate cabinet ground connection.

[1] You can use the resolution selection keys to move the flashing digit to the right or left when setting the current.

## Power-line voltage selection

Power-line voltage selection is accomplished by adjusting two components — power-line voltage selector and power-line fuse on the power-line module of the rear panel. To change the power-line voltage, proceed as follows:

1 *Remove the power cord.*

Remove the fuse-holder assembly with a flat-blade screwdriver from the rear panel.

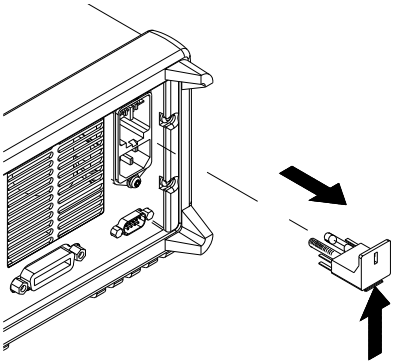

2 *Install the correct line fuse.*

Remove the power-line voltage selector from the power-line module.

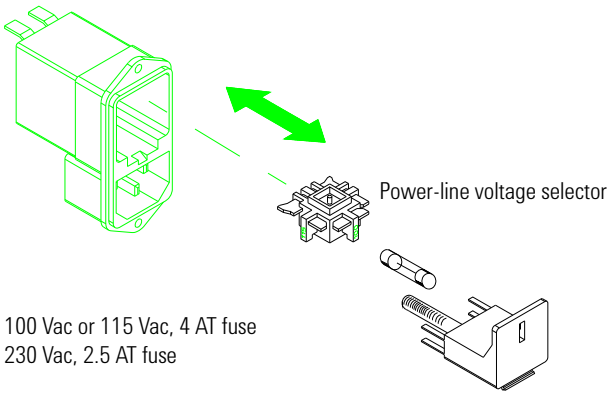

**3** Rotate the power-line voltage selector until the correct voltage appears.

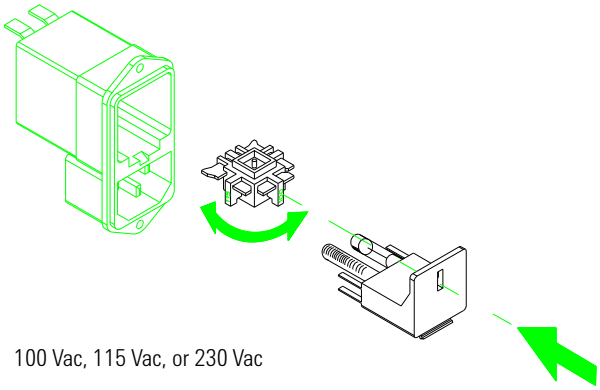


**4** Replace the power-line voltage selector and the fuse-holder assembly in the rear panel.

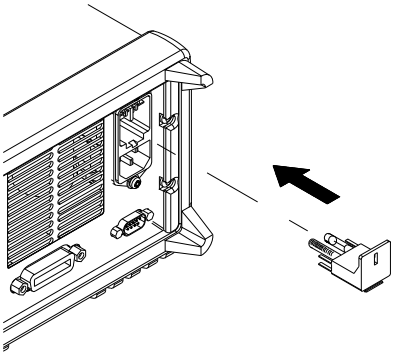

**NOTE** Verify that the correct line voltage is selected and the power-line fuse is good.

## Rack-mount the power supply

The power supply can be mounted in a standard 19-inch rack cabinet using one of three optional kits available. A rack-mounting kit for a single instrument is available as Option 1CM (5063-9243). Installation instructions and hardware are included with each rack-mounting kit. Any Agilent System II instrument of the same size can be rack-mounted beside the Agilent E3632A power supply.

1 Remove the front and rear bumpers before rack-mounting the power supply.

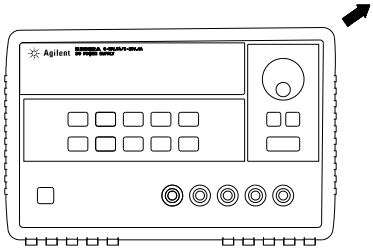


Front

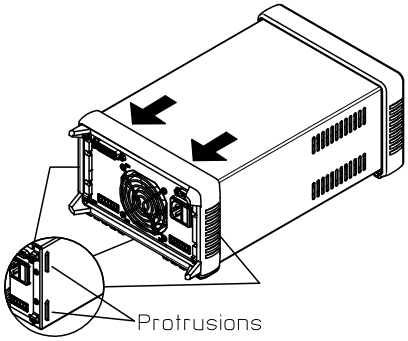


Rear (bottom view)

2 To rack-mount a single instrument, order the adapter kit (5063-9243).

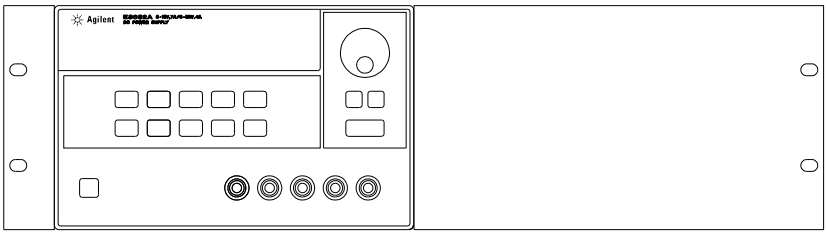

**3** To rack-mount two instruments of the same depth side-by-side, order the lock-link kit (5061-9694) and rack-mount kit (5063-9212).

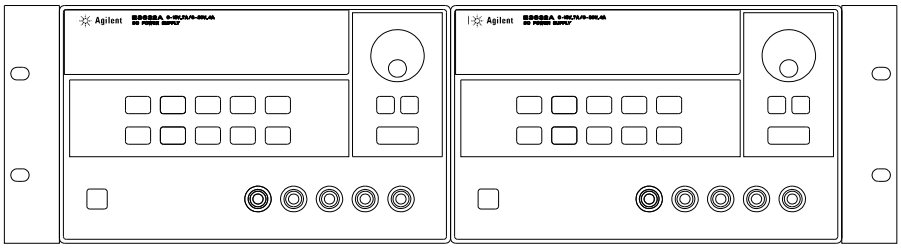


**4** To install two instruments in a sliding support shelf, order the support shelf (5063-9256) and the slide kit (1494-0015).

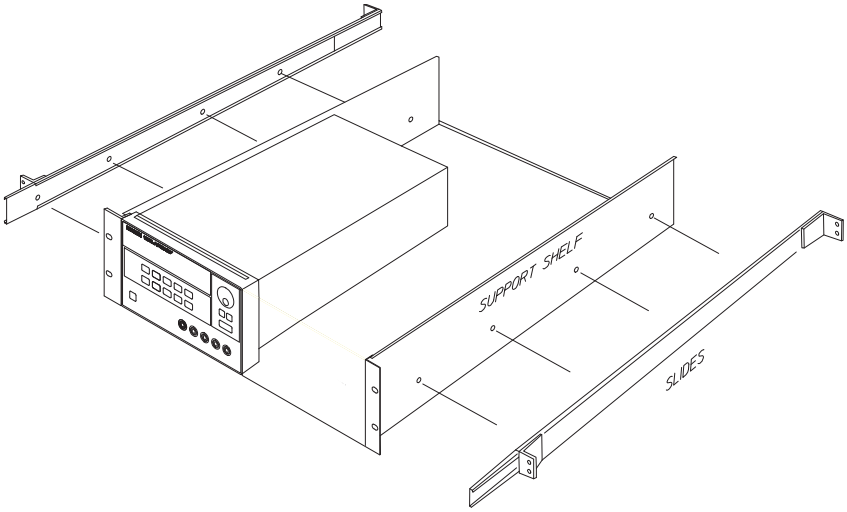

# Product at a Glance

## Front panel

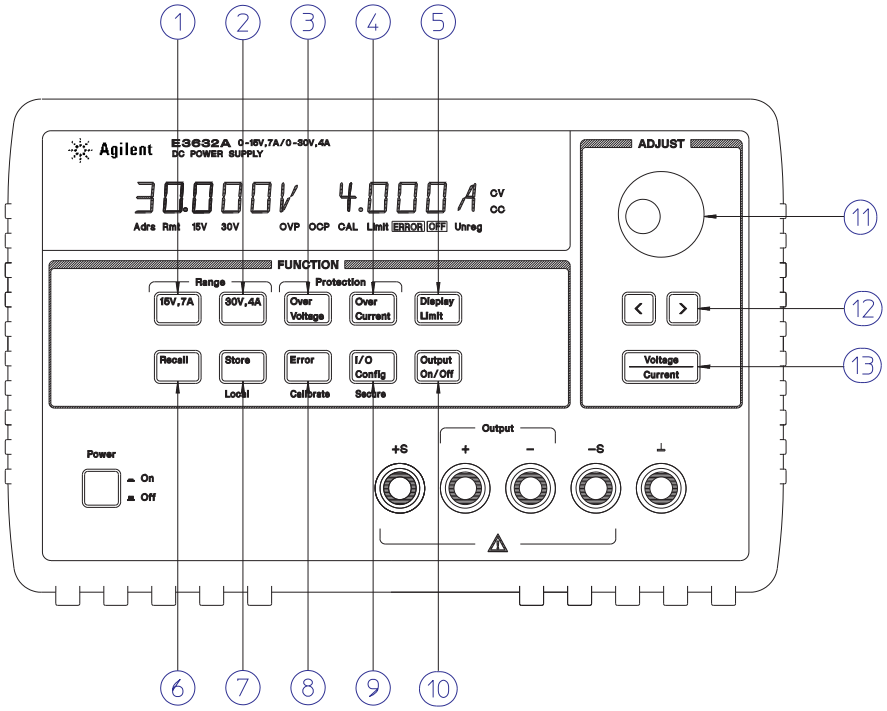


**Figure 1-2** Front panel

**Table 1-3** Front panel overview

| No | Item | Description |
|---|---|---|
| 1 | 15 V/7 A range selection key | Select the 15 V/7 A range and allow the full rated output to 15 V/7 A. |
| 2 | 30 V/4 A range selection key | Select the 30 V/4 A range and allow the full rated output to 30 V/4 A. |

**Table 1-3** Front panel overview (continued)

| No | Item | Description |
|---|---|---|
| 3 | Overvoltage protection key | Enable or disable the overvoltage protection function, set the trip voltage level, and clear the overvoltage condition. |
| 4 | Overcurrent protection key | Enable or disable the overcurrent protection function, set the trip current level, and clear the overcurrent condition. |
| 5 | Display limit key | Display the voltage and current limit values on the display and allow the knob adjustment for setting the limit values. |
| 6 | Recall operating state key | Recall a previously stored operating state from location 1, 2, or 3. |
| 7 | Store operating state/Local key[1] | Store an operating state in location 1, 2, or 3 or return the power supply to the local mode from the remote interface mode. |
| 8 | Error/Calibrate key[2] | Display the error codes generated during operation, self-test, and calibration or enable the calibration mode (the power supply must be unsecured before performing calibration). Refer to the *Service Guide (E3632-90010)* for more details on calibration. |
| 9 | I/O Configuration/Secure key[3] | Configure the power supply for remote interfaces, or secure or unsecure the power supply for calibration. Refer to the *Service Guide (E3632-90010)* for more details on how to secure or unsecure the power supply. |
| 10 | Output On/Off key | Enable or disable the power supply output. This key toggles between on and off. |
| 11 | Control knob | Increase or decrease the value of the flashing digit by turning clockwise or counter-clockwise. |
| 12 | Resolution selection keys | Move the flashing digit to the right or left. |
| 13 | Voltage/Current adjust selection key | Select the knob control function for voltage or current adjustment. |

[1] The key can be used as the **Local** key when the power supply is in the remote interface mode.

[2] You can enable the calibration mode by holding down this key when you turn on the power supply.

[3] You can use it as the **Secure** or **Unsecure** key when the power supply is in the calibration mode.

### Voltage and current limit settings

You can set the voltage and current limit values from the front panel using the following method.

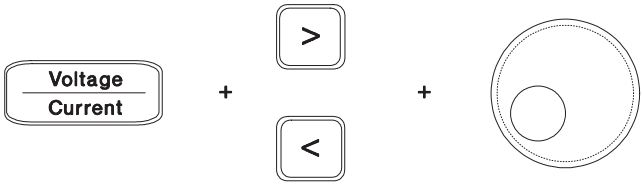


**Figure 1-3** Voltage and current limit settings

1. Select the desired range using the range selection keys after turning on the power supply.
2. Press `Display Limit` to show the limit values on the display.
3. Move the blinking digit to the appropriate position using the resolution selection keys and change the blinking digit value to the desired voltage limit by turning the control knob. If the display limit times out, press `Display Limit` again.
4. Set the knob to current control mode using the voltage/current adjust selection key.
5. Move the blinking digit to the appropriate position using the resolution selection keys and change the blinking digit value to the desired current limit by turning the control knob.
6. Press `Output On/Off` to enable the output. After about five seconds, the display will go to output monitoring mode automatically to display the voltage and current at the output or the display will go to output monitoring mode immediately by pressing `Display Limit` again.

**NOTE** All the front panel keys and controls can be disabled with the remote interface commands. The power supply must be in the Local mode for the front panel keys and controls to function.

# Rear panel

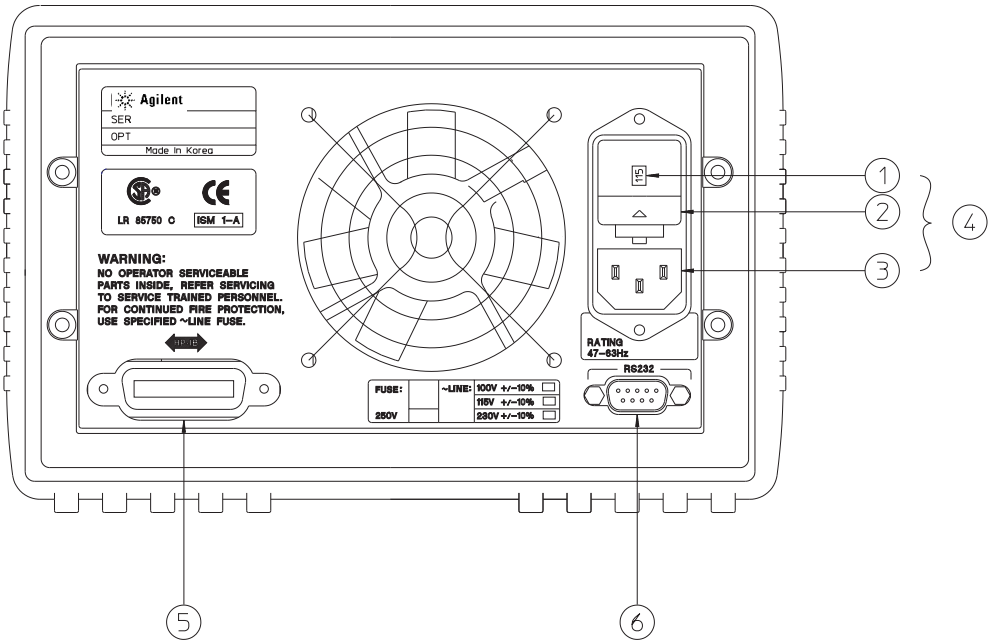


**Figure 1-4** Rear panel

**Table 1-4** Rear panel overview

| No | Description |
|---|---|
| 1 | Power-line voltage setting |
| 2 | Power-line fuse-holder assembly |
| 3 | AC inlet |
| 4 | Power-line module |
| 5 | GPIB (IEEE-488) interface connector |
| 6 | RS-232 interface connector |

**NOTE**

Use the front-panel I/O Config key to:

- Select the GPIB or RS-232 interface (see Chapter 2).
- Set the GPIB bus address (see Chapter 2).
- Set the RS-232 baud rate and parity (see Chapter 2).

## Display annunciators

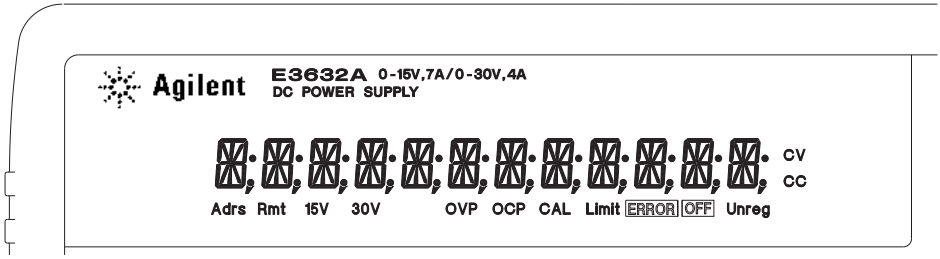


**Figure 1-5** Display annunciators

**Table 1-5** Display annunciators overview

| Item | Description |
|---|---|
| Adrs | The power supply is addressed to listen or talk over a remote interface. |
| Rmt | The power supply is in the remote interface mode. |
| 15 V | Shows the 15 V/7 A range is selected. |
| 30 V | Shows the 30 V/4 A range is selected. |
| OVP | The overvoltage protection function is enabled when the annunciator turns on or the overvoltage protection circuit has caused the power supply to shut down when the annunciator flashes. |
| OCP | The overcurrent protection function is enabled when the annunciator turns on or the overcurrent protection circuit has caused the power supply to shut down when the annunciator flashes. |
| CAL | The power supply is in the calibration mode. |
| Limit | The display shows the limit values of the voltage and current. |

**Table 1-5** Display annunciators overview (continued)

| Item | Description |
|---|---|
| ERROR | Hardware or remote interface command errors are detected and the error bit has not been cleared. |
| OFF | The output of the power supply is disabled. Refer to "System-Related Operations" on page 46 for more information. |
| Unreg | The output of the power supply is unregulated (output is neither CV nor CC). |
| CV | The power supply is in the constant voltage mode. |
| CC | The power supply is in the constant current mode. |

**NOTE** To review the display annunciators, hold down `Display Limit` as you turn on the power supply.

# Operating the Power Supply

## Cooling

The power supply can operate at the rated specifications within the temperature range of 0 °C to 40 °C. A fan cools the power supply by drawing air through the sides and exhausting it out the back. Using an Agilent rack-mount will not impede the flow of air.

## Bench operation

Your power supply must be installed in a location that allows sufficient space at the sides and rear of the power supply for adequate air circulation. The rubber bumpers must be removed for rack-mounting.

## Cleaning

No cleaning is required for this product. If you wish to remove dust from the enclosure, use a dry cloth.

# 2
# Operation and Features

Overview 26
Constant Voltage Operation 28
Constant Current Operation 30
Storing and Recalling Operating States 33
Programming the Overvoltage Protection 35
Programming the Overcurrent Protection 38
Remote Voltage Sensing 41
Disabling the Output 44
System-Related Operations 46
Remote Interface Configuration 51
GPIB Interface Configuration 56
RS-232 Interface Configuration 57
Calibration 63

This chapter describes the operations and features for the E3632A DC power supply.

# Overview

The following section describes an overview of the front panel keys before operating your power supply.

- The power supply is shipped from the factory configured in the front panel operation mode. At power-on, the power supply is automatically set to operate in the front panel operation mode. When in this mode, the front panel keys can be used. When the power supply is in remote operation mode, you can return to front panel operation mode at any time by pressing `Local` if you did not previously send the front panel lockout command. A change between front panel and remote operation modes will not result in a change in the output parameters.
- The power supply has two output ranges of 15 V/7 A or 30 V/4 A. This feature allows more voltage at a lower current or more current at a lower voltage. The desired output range is selected from the front panel or over the remote interfaces. The **15V** or **30V** annunciator indicates the presently selected range.
- When you press `Display Limit` (the Limit annunciator flashes), the display of the power supply goes to the limit mode and the present limit values will be displayed. In this mode, you can also observe the change of the limit values when adjusting the knob. If you press `Display Limit` again or let the display time-out after several seconds, the power supply will return the display to the meter mode (the **Limit** annunciator turns off). In this mode, the actual output voltage and current will be displayed.
- The output of the power supply can be enabled or disabled from the front panel using `Output On/Off`. When the output is off, the **OFF** annunciator turns on and the output is disabled.

- The display provides the present operating status of the power supply with annunciators and also informs the user of error codes. For example, the power supply is operating in CV mode in the 15 V/7 A range and controlled from the front panel, then the CV and **15V** annunciators will turn on. If, however, the power supply is remotely controlled, the **Rmt** annunciator will also turn on, and when the power supply is being addressed over GPIB interface, the **Adrs** annunciator will turn on. Refer to "Display annunciators" on page 22 for more information.

# Constant Voltage Operation

To set up the power supply for constant voltage (CV) operation, proceed as follows.

## Front panel operation

1 *Connect a load to the output terminals.*

With power-off, connect a load to the (+) and (–) output terminals.

Power

2 *Turn on the power supply.*

The power supply will go into the power-on/reset state, the output is disabled (the **OFF** annunciator turns on), the 15 V/7 A range is selected (the **15V** annunciator turns on), and the knob is selected for voltage control.

To operate the power supply in the 30 V/4 A range, press 30V,4A before proceeding to the next step. The **30V** annunciator turns on.

Display Limit

3 *Set the display to the limit mode.*

Notice that the **Limit** annunciator flashes, indicating that the display is in the limit mode. When the display is in the limit mode, you can see the voltage and current limit values of the power supply.

**NOTE** In the constant voltage mode, the voltage values between the meter and limit modes are the same, but the current values are not. Moreover, if the display is in the meter mode, you cannot see the change of current limit value when adjusting the knob. We recommend that you should set the display to the limit mode to see the change of current limit value in the constant voltage mode whenever adjusting the knob.

Volt/Curr

**4** *Adjust the knob for the desired current limit.*[1]

Check that the **Limit** annunciator still flashes. Set the knob for current control. The first digit of the ammeter will be flashing. The flashing digit can be changed using the resolution selection keys and the flashing digit can be adjusted by turning the knob. Adjust the knob to the desired current limit.

Volt/Curr

**5** *Adjust the knob for the desired output voltage.*[2]

Check that the **Limit** annunciator still flashes. Set the knob for voltage control. The second digit of the voltmeter will be flashing. Change the flashing digit using the resolution selection keys and adjust the knob for the desired output voltage.

Display Limit

**6** *Return to the meter mode.*

Press Display Limit or let the display time-out after several seconds to return to the meter mode. Notice that the **Limit** annunciator turns off and the display shows the **OUTPUT OFF** message.

Output On/Off

**7** *Enable the output.*

The **OFF** annunciator turns off and the **15V** or **30V**, **OVP**, **OCP**, and **CV** annunciators are lit. Notice that the display is in the meter mode. In the meter mode, the display shows the actual output voltage and current.

Refer to "Programming the Overvoltage Protection" on page 35 and "Programming the Overcurrent Protection" on page 38 for more information on the **OVP** and **OCP** annunciators.

**8** *Verify that the power supply is in the constant voltage mode.*

If you operate the power supply in the constant voltage (CV) mode, verify that the **CV** annunciator is lit. If the **CC** annunciator is lit, choose a higher current limit.

[1] You can use the resolution selection keys to move the flashing digit to the right or left when setting current.

[2] You can use the resolution selection keys to move the flashing digit to the right or left when setting voltage.

**NOTE** During actual CV operation, if a load change causes the current limit to be exceeded, the power supply will automatically cross over to the constant current mode at the preset current limit and the output voltage will drop proportionately.

### Remote interface operation

| | |
|---|---|
| `CURRent {<current>|MIN|MAX}` | *Set the current.* |
| `VOLTage {<voltage>|MIN|MAX}` | *Set the voltage.* |
| `OUTPut ON` | *Enable the output.* |

## Constant Current Operation

To set up the power supply for constant current (CC) operation, proceed as follows.

### Front panel operation

**1** *Connect a load to the output terminals.*

With power-off, connect a load to the (+) and (–) output terminals.

Power **2** *Turn on the power supply.*

The power supply will go into the power-on/reset state, the output is disabled (the **OFF** annunciator turns on), the 15 V/7 A range is selected (the **15V** annunciator turns on) and the knob is selected for voltage control.

To operate the power supply in the 30 V/4 A range, press 30V,4A before proceeding to the next step. The **30V** annunciator turns on.

Display Limit

**3** *Set the display to the limit mode.*

Notice that the **Limit** annunciator flashes, indicating that the display is in the limit mode. When the display is in the limit mode, you can see the voltage and current limit values of the selected supply.

**NOTE**

In constant current mode, the current values between the meter mode and limit mode are the same, but the voltage values are not. Moreover, if the display is in the meter mode, you cannot see the change of voltage limit value when adjusting the knob. We recommend that you should set the display to the limit mode to see the change of voltage limit value in the constant current mode whenever adjusting the knob.

**4** *Adjust the knob for the desired voltage limit.*[1]

Check that the **Limit** annunciator still flashes and the second digit of voltmeter flashes to indicate the knob is selected for voltage control. The flashing digit can be changed using the resolution keys and the flashing digit can be adjusted by turning the knob. Adjust the knob for the desired voltage limit.

Volt/Curr

**5** *Adjust the knob for the desired output current*[1]

Check that the **Limit** annunciator still flashes. Set the knob for current control. The first digit of the ammeter will be flashing. Change the flashing digit using the resolution selection keys and adjust the knob to the desired output current.

Display Limit

**6** *Return to the meter mode.*

Press Display Limit or let the display time-out after several seconds to return to the meter mode. Notice that the **Limit** annunciator turns off and the display shows the **OUTPUT OFF** message.

[1] You can use the resolution selection keys to move the flashing digit to the right or left when setting the voltage.

`Output On/Off`

**7** *Enable the output.*

The **OFF** annunciator turns off and the **15V** or **30V**, **OVP**, **OCP**, and **CC** annunciators are lit. Notice that the display is in the meter mode. In the meter mode, the display shows the actual output voltage and current.

Refer to "Programming the Overvoltage Protection" on page 35 and "Programming the Overcurrent Protection" on page 38 for more information on the **OVP** and **OCP** annunciators.

**8** *Verify that the power supply is in the constant current mode.*

If you operate the power supply in the constant current (CC) mode, verify that the **CC** annunciator is lit. If the **CV** annunciator is lit, choose a higher voltage limit.

**NOTE** During actual CC operation, if a load change causes the voltage limit to be exceeded, the power supply will automatically cross over to constant voltage mode at the preset voltage limit and the output current will drop proportionately.

## Remote interface operation

| | |
|---|---|
| `VOLTage {<voltage>\|MIN\|MAX}` | *Set the voltage.* |
| `CURRent {<current>\|MIN\|MAX}` | *Set the current.* |
| `OUTPut ON` | *Enable the output.* |

# Storing and Recalling Operating States

You can store up to three different operating states in non-volatile memory. This also enables you to recall the entire instrument configuration with just a few key presses from the front panel.

The memory locations are supplied with the reset states from the factory for front-panel operation. Refer to the description of "*RST" on page 99 for more information. The following steps show you how to store and recall an operating state.

## Front panel operation

### Storing the operating state

1 *Set up the power supply for the desired operating state.*

The storage feature "remembers" output range selection, the limit value settings of voltage and current, output on/off state, OVP and OCP on/off state, and OVP and OCP trip levels.

Store

2 *Turn on the storage mode.*

Three memory locations (numbered 1, 2, and 3) are available to store the operating states. The operating states are stored in non-volatile memory and are remembered when being recalled.

**STORE 1**

This message appears on the display for approximately three seconds.

3 *Select the storage location.*

Turn the knob to the right to specify the memory location 3.

**STORE 3**

To cancel the store operation, let the display time-out after about three seconds or press any other function key except [Store]. The power supply returns to the normal operating mode and to the function pressed.

[Store] **4** *Save the operating state.*

The operating state is now stored.

**DONE**

This message appears on the display for approximately 1 second.

### Recalling a stored state

[Recall] **1** *Turn on the recall mode.*

Memory location 1 will be displayed in the recall mode.

**RECALL 1**

This message appears on the display for approximately three seconds.

**2** *Recall the stored operating state.*

Turn the knob to the right to change the displayed storage location to 3.

**RECALL 3**

If this setting is not followed within three seconds with [Recall], the power supply returns to normal operating mode and will not recall the instrument state 3 from memory.

[Recall] **3** *Restore the operating state.*

**DONE**

This message appears on the display for approximately 1 second.

## Remote interface operation

Use the following commands to store and recall the power supply state.

| | |
|---|---|
| `*SAV {1|2|3}` | *Store an operating state to a specified location* |
| `*RCL {1|2|3}` | *Recall a previously stored state from a specified location* |

# Programming the Overvoltage Protection

Overvoltage protection guards the load against output voltages that reach a specified value greater than the programmed protection level. It is accomplished by shorting the output via an internal SCR when the trip level is set to equal or greater than 3 V, or by progamming the output to 1 V when the trip level is set to less than 3 V.

The following steps show how to set the OVP trip level, how to check OVP operation, and how to clear overvoltage condition.

## Front panel operation

### Setting the OVP level and enable the OVP circuit

Power

**1** *Turn on the power supply.*

The power supply will go into the power-on/reset state, the output is disabled (the **OFF** annunciator turns on), the 15 V/7 A range is selected (the **15V** annunciator turns on); and the knob is selected for voltage control.

Output On/Off

**2** *Enable the output.*

The **OFF** annunciator turns off and the display will go to the meter mode.

Over Voltage

**3** *Enter the OVP menu and set the desired trip level.*

**LEVEL 32.0 V**

You will see the above message on the display when you enter the OVP menu. Adjust the control knob for the desired OVP trip level. Note that you cannot set the trip levels to lower than 1.0 V.

Over Voltage

**4** *Enable the OVP circuit.*

**OVP ON**

You will see the above message after pressing Over Voltage.

Over Voltage

**5** *Exit the OVP menu.*

**CHANGED**

The **CHANGED** message is highlighted for a second to show that the new OVP trip level is now in effect. If the OVP settings are not changed, **NO CHANGE** will be displayed. The power supply will exit the OVP menu and the display will return to the meter mode. Check that the **OVP** annunciator turns on.

### Checking the OVP operation

To check OVP operation, raise the output voltage to near the trip point. Then very gradually increase the output by turning the knob until the OVP circuit trips. This will cause the power supply output to drop to near zero, the **OVP** annunciator to flash, and the **CC** annunciator to turn on. The **OVP TRIPPED** message also appears on the display.

### Clearing the overvoltage condition

When the OVP condition occurs (the **OVP TRIPPED** message is shown on the display), the **OVP** annunciator flashes. When it was caused by external voltage source such as a battery, disconnect it first. The following steps show how to clear the overvoltage conditions and get back to normal mode operation. In the following steps, the display will go back to **OVP TRIPPED** if you let the display time-out after about several seconds.

Over Voltage or Display Limit

**1** *Readjust the OVP trip level or the output voltage level.*

Lower the output voltage level below the OVP trip point after pressing Display Limit or raise the OVP trip level by using the knob after pressing Over Voltage.

Over Voltage

**2** *Move to the clear mode.*

**OVP ON**

You will see the above message after pressing Over Voltage. If you changed the output voltage level, press the Over Voltage twice. Turn the knob to the right until the **OVP CLEAR** message appears on the display.

Over Voltage

**3** *Clear the overvoltage condition and exit this menu.*

Now, when you press Over Voltage again, the **DONE** message is displayed for a second and the **OVP** annunciator will not flash any more. The output will return to meter mode.

## Remote interface operation

| | |
|---|---|
| `VOLT:PROT {<voltage>\|MIN\|MAX}` | *Set the OVP level.* |
| `VOLT:PROT:STAT {OFF\|ON)` | *Disable or enable the OVP circuit.* |
| `VOLT:PROT:CLE` | *Clear the tripped OVP circuit.* |

**NOTE**

The power supply's OVP circuit contains a crowbar SCR, which effectively shorts the output of the power supply whenever the overvoltage condition occurs. If external voltage source such as a battery is connected across the output, and the overvoltage condition inadvertently occurs, the SCR will continuously sink a large current from the source and possibly damage the power supply. To avoid this a diode must be connected in series with the output as shown in Figure 2-1.

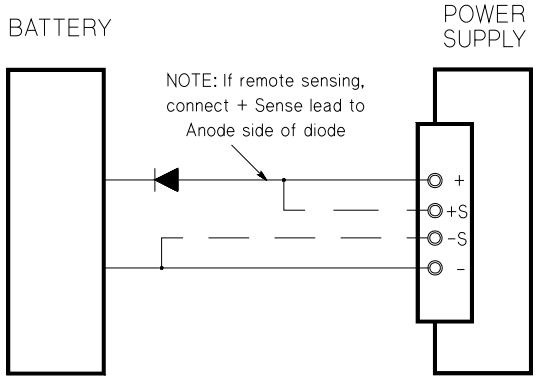


**Figure 2-1** Recommended protection circuit for battery charging

# Programming the Overcurrent Protection

Overcurrent protection guards the load against output currents that reach a specified value greater than the programmed protection level. It is accomplished by programming the output current to zero.

The following steps show how to set the overcurrent protection trip level, how to check OCP operation and how to clear overcurrent condition.

## Front panel operation

### Setting the OCP level and enable the OCP circuit

Power

**1** *Turn on the power supply.*

The power supply will go into the power-on/reset state, the output is disabled (the **OFF** annunciator turns on), the 15 V/7 A range is selected (the **15V** annunciator turns on); and the knob is selected for voltage control.

Output On/Off

**2** *Enable the output.*

The **OFF** annunciator turns off and the display will go to the meter mode.

Over Current

**3** *Enter the OCP menu and set the desired trip level.*

**LEVEL 7.5 A**

You will see the above message on the display when you enter the OCP menu. Adjust the knob for the desired OCP trip level.

Over Current

**4** *Enable the OCP circuit.*

**OCP ON**

You will see the above message after pressing Over Current.

Over Current

**5** *Exit the OCP menu.*

**CHANGED**

The **CHANGED** message is displayed for a second to show that the new OCP trip level is now in effect. If the OCP settings are not changed, **NO CHANGE** will be displayed. The power supply will exit the OCP menu and the display will return to the meter mode. Check that the **OCP** annunciator turns on.

## Checking the OCP operation

To check OCP operation, raise the output current to near the trip point. Then very gradually increase the output by turning the knob until the OCP circuit trips. This will cause the power supply's output current to drop to zero and the **OCP** annunciator to flash. The **OCP TRIPPED** message also appears on the display.

### Clearing the overcurrent condition

When the OCP condition occurs (the **OCP TRIPPED** message is shown on the display), the **OCP** annunciator flashes. When it was caused by external voltage source such as a battery, disconnect it first. The following steps show how to clear the overcurrent conditions and get back to normal mode operation. In the following steps, the display will go back to **OCP TRIPPED** if you let the display time-out after about several seconds.

Over Current or Display Limit

**1** *Readjust the OCP trip level or the output current level.*

Lower the output current level below the OCP trip point after pressing Display Limit or raise the OCP trip level by using the knob after pressing Over Current.

Over Current

**2** *Move to the clear mode.*

**OCP ON**

You will see the above message after pressing Over Current. If you changed the output voltage level, press the Over Current twice. Turn the knob to the right until the **OCP CLEAR** message appears on the display.

Over Current

**3** *Clear the overcoltage condition and exit this menu.*

Now, when you press Over Current again, the **DONE** message is displayed for a second and the **OCP** annunciator will not flash any more. The output will return to meter mode.

## Remote interface operation

| | |
|---|---|
| `CURR:PROT {<current>\|MIN\|MAX}` | *Set the OCP level.* |
| `CURR:PROT:STAT {OFF\|ON)` | *Disable or enable the OCP circuit.* |
| `CURR:PROT:CLE` | *Clear the tripped OCP circuit.* |

# Remote Voltage Sensing

Remote voltage sensing is used to maintain regulation at the load and reduce the degradation of regulation that would occur due to the voltage drop in the leads between the power supply and the load.

By connecting the power supply for remote voltage sensing, voltage is sensed at the load rather than at the power supply's output terminals. This will allow the power supply to automatically compensate for the voltage drop in applications with long lead lengths as well as to accurately read back the voltage directly across the load.

When the power supply is connected for remote sensing, the OVP circuit senses the voltage at the sensing points (load) and not the output terminals.

## CV regulation

The voltage load regulation specification in Chapter 7 applies at the output terminals of the power supply. When remote sensing, add 5 mV to this specification for each 1 V drop between the positive sensing point and (+) output terminal due to the change in load current. Because the sense leads are part of the power supply's feedback path, keep the resistance of the sense leads at or below 0.5 Ω per lead to maintain the above specified performance.

## Output rating

The rated output voltage and current specifications in Chapter 7 apply at the output terminals of the power supply. With remote sensing, any voltage dropped in the load leads must be added to the load voltage to calculate maximum output voltage. The performance specifications are not guaranteed when the maximum output voltage is exceeded. If the excessive demand on the power supply forces the power supply to lose regulation, the **Unreg** annunciator will turn on to indicate that the output is unregulated.

## Output noise

Any noise picked up on the sense leads also appears at the output of the power supply and may adversely affect the voltage load regulation. Twist the sense leads to minimize external noise pickup and run them parallel and close to the load leads. In noisy environments it may be necessary to shield the sense leads. Ground the shield at the power supply end only. *Do not use the shield as one of the sense conductors.*

## Stability

Using remote sensing under certain combinations of load lead lengths and large load capacitances may cause your application to form a filter, which becomes part of the voltage feedback loop. The extra phase shift created by this filter can degrade the power supply's stability, resulting in poor transient response or loop instability. In severe cases, it may cause oscillations. To minimize this possibility, keep the load leads as short as possible and twist them together. As the sense leads are part of the power supply's programming feedback loop, accidental open-connections of

sense or load leads during remote sensing operation have various unwanted effects. Provide secure and permanent connections.

## Remote voltage sensing connections

Remote voltage sensing requires connecting the load leads from output terminals to the load and connecting the sense leads from sense terminals to the load as shown in Figure 2-2. Observe polarity when connecting the sensing leads to the load.

Notice that the metal shorting bars should be removed from the output and sense terminals for remote voltage sensing connections.

**NOTE**

- For local voltage sensing connections, the sense leads must be connected to the output terminals.
- During remote sensing setup, it is strongly recommended to power off (by presssing the power ON/OFF button) the power supply to avoid undesirable damage to the load or the power supply.

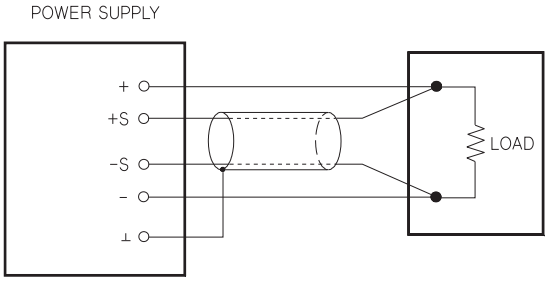


**Figure 2-2** Remote voltage sensing connections

# Disabling the Output

The output of the power supply can be disabled or enabled from the front panel.

- When the power supply is in the Off state, the **OFF** annunciator turns on and the output is disabled. The **OFF** annunciator turns off when the power supply returns to the On state. When the output is disabled, the voltage value is 0 V and the current value is 0.02 A.
- The output state is stored in volatile memory; the output is always disabled when power has been off or after a remote interface reset.

**NOTE**

While the output is disabled, the range selection keys, the control knob, resolution selection keys, and adjust selection key are still working. If the display is in the meter mode, you cannot see the changes of output voltage and current settings on the display when turning the knob. To see or check the changes when the outputs are disabled, the display should be in the limit mode.

## Front panel operation

You can disable the output by pressing `Output On/Off`. This key toggles between output Off and On states.

## Remote interface operation

`OUTP {OFF|ON}` *Disable or enable the output.*

## Disconnecting the output using an external relay

When the output of the E3632A is turned off, it is implemented by setting the output to 0 V and 0.02 A. This gives a zero output voltage without actually disconnecting the output. To disconnect the output an external relay must be connected between the output and the load. A TTL signal of either low true or high true is provided to control an external relay. This signal can only be controlled with the remote command `OUTPut:RELay {OFF|ON}`. The TTL output is available on the RS-232 connection pin 1 and pin 9.

When the `OUTPut:RELay` state is ON, the TTL output of pin 1 is high (4.5 V) and pin 9 is low (0.5 V). The levels are reversed when the `OUTPut:RELay` state is OFF.

**NOTE**

- TTL output of pin 1 or pin 9 of the RS-232 connector is available only after installing two jumpers inside the power supply. Refer to the *Service Guide (E3632-90010)* for more information.
- Do not use the RS-232 interface if you have configured the power supply to output relay control signals. Internal components on the RS-232 circuitry may be damaged.

## Knob locking

The knob locking function can be used to disable the knob, thereby preventing any unwanted changes during an experiment, or when you leave the power supply unattended. To disable the knob, press the resolution selection key until the blinking digit disappears.

Notice that the knob and front panel keys are disabled when in the remote interface mode.

# System-Related Operations

This section gives information on topics such as self-test, error conditions, and front-panel display control. This information is not directly related to setting up the power supply but is an important part of operating the power supply.

## Self-test

A power-on self-test occurs automatically when you turn on the power supply. This test assures you that the power supply is operational. This test does not perform the extensive set of tests that are included as part of the complete self-test described below. If the power-on self-test fails, the **ERROR** annunciator turns on.

A complete self-test performs a series of tests and takes approximately two seconds to execute. If all tests pass, you can have a high confidence that the power supply is operational.

If the complete self-test is successful, **PASS** is displayed on the front panel. If the self-test fails, **FAIL** is displayed and the **ERROR** annunciator turns on. See the *Service Guide (E3632-90010)* for instructions on returning the power supply to Agilent for service.

### Front panel operation

The complete self-test is enabled by pressing [Recall] (actually any front panel keys except [Error]) and the power-line switch simultaneously and then continuing to press [Recall] for five seconds. The complete self-test will be finished in two seconds.

### Remote interface operation

"*TST?"

Returns **0** if the complete self-test passes or **1** if it fails.

# Error conditions

When the front-panel **ERROR** annunciator turns on, one or more command syntax or hardware errors have been detected. A record of up to 20 errors can be stored in the power supply's error queue. Refer to Chapter 4, "Error Messages" for more information.

- Errors are retrieved in first-in-first-out (FIFO) order. The first error returned is the first error that was stored. When you have read all errors from the queue, the ERROR annunciator turns off. The power supply beeps once each time an error is generated.
- If more than 20 errors have occurred when you operate the power supply over the remote interface, the last error stored in the queue (the most recent error) is replaced with -350, "Queue overflow". No additional errors are stored until you remove errors from the queue. If no errors have occurred when you read the error queue, the power supply responds with +0, "No error" over the remote interface or **NO ERRORS** from the front panel.
- The error queue is cleared when power has been off or after a `*CLS` (clear status) command has been executed. The `*RST` (reset) command does not clear the error queue.

### Front panel operation

If the **ERROR** annunciator is on, press [Error] repeatedly to read the errors stored in the queue. All errors are cleared when you read all errors.

**ERROR -113**

### Remote interface operation

| | |
|---|---|
| `SYST:ERR?` | *Reads an error from the error queue* |

Errors have the following format (the error string may contain up to 80 characters).

-113, "Undefined header"

## Display control

For security reasons, you may want to turn off the front-panel display. From the remote interface, you can display a 12-character message on the front panel.

The display can be enabled/disabled from the remote interface only.

- When the display is turned off, outputs are not sent to the display and all annunciators are disabled except the **ERROR** annunciator. Front-panel operation is otherwise unaffected by turning off the display.
- The display state is stored in volatile memory; the display is always enabled when power has been off, after a remote interface reset, or after returning to local from remote.
- You can display a message on the front panel by sending a command from the remote interface. The power supply can display up to 12 characters of the message on the front panel; any additional characters are truncated. Commas, periods, and semicolons share a display space with the preceding character, and are not considered individual characters. When a message is displayed, outputs are not sent to the display.
- Sending a message to the display from the remote interface overrides the display state; this means that you can display a message even if the display is turned off.

  The display state is automatically turned on when you return to the local (front panel) operation. Press `Local` to return to the local state from the remote interface.

**Remote interface operation:**

| | |
|---|---|
| `DISP {OFF\|ON}` | *Disable/enable the display.* |
| `DISP:TEXT <quoted string>` | *Display the string enclosed in quotes* |
| `DISP:TEXT:CLE` | *Clear the displayed message* |

The following statement shows how to display a message on the front panel from an Agilent controller.

```
DISP:TEXT 'HELLO'
```

## Firmware revision query

The power supply has three microprocessors for control of various internal systems. You can query the power supply to determine which revision of firmware is installed for each microprocessor.

You can query the firmware revision from the remote interface only.

The power supply returns four fields separated by commas and the fourth field is a revision code which contains three numbers. The first number is the firmware revision number for the main processor, the second is for the input/output processor, and the third is for the front-panel processor.

### Remote interface operation

```
*IDN?
```

The above command returns a string in the form:

**HEWLETT-PACKARD,E3632A,0,X.X-X.X-X.X**

Be sure to dimension a string variable with at least 40 characters.

## SCPI language version

The power supply complies with the rules and regulations of the present version of Standard Commands for Programmable Instruments (SCPI). You can determine the SCPI version with which the power supply is in compliance by sending a command from the remote interface.

You can query the SCPI version from the remote interface only.

### Remote interface operation

| | |
|---|---|
| `SYST:VERS?` | *Query the SCPI version* |

Returns a string in the form of `YYYY.V` where the `Y` represents the year of the version, and the `V` represents the version number for that year (for example, 1995.0).

# Remote Interface Configuration

Before you can operate the power supply over the remote interface, you must configure the power supply for the remote interface. This section gives information on configuring the remote interface. For additional information on programming the power supply over the remote interface, Refer to Chapter 3, “Remote Interface Reference”.

## Remote interface selection

The power supply is shipped with both a GPIB (IEEE-488) interface and an RS-232 interface on the rear panel. Only one interface can be enabled at a time. The GPIB interface is selected when the power supply is shipped from the factory.

The remote interface can be selected from the front-panel only.

- The interface selection is stored in non-volatile memory, and does not change when power has been off or after a remote interface reset.
- If you select the GPIB interface, you must select a unique address for the power supply. The current address is displayed momentarily on the front panel when you turn on the power supply.[1]
- Your GPIB bus controller has its own address. Be sure to avoid using the bus controller’s address for any instrument on the interface bus. Agilent controllers generally use address 21.
- If you enable the RS-232 interface, you must select the baud rate and parity to be used. **RS-232** is displayed momentarily on the front panel when you turn on the power supply if you have selected this interface.[2]

[1] Refer to “GPIB Interface Configuration” on page 56 for more information on connecting the power supply to a computer over the GPIB interface.

## GPIB address

Each device on the GPIB (IEEE-488) interface must have a unique address. You can set the power supply's address to any value between 0 and 30. The current address is displayed momentarily on the front panel when you turn on the power supply. The address is set to 05 when the power supply is shipped from the factory.

The GPIB address can be set from the front-panel only.

- The address is stored in non-volatile memory, and does not change when power has been off or after a remote interface reset.
- Your GPIB bus controller has its own address. Be sure to avoid the bus controller's address for any instrument on the interface bus. Agilent controllers generally use address 21.

## Baud rate selection (RS-232)

You can select one of six baud rates for RS-232 operation. The rate is set to 9600 baud when the power supply is shipped from the factory.

The baud rate can be set from the front-panel only.

- Select one of the following: 300, 600, 1200, 2400, 4800, 9600 baud. The factory-setting is 9600 baud.
- The baud rate selection is stored in non-volatile memory, and does not change when power has been off or after a remote interface reset.

[2] Refer to "RS-232 Interface Configuration" on page 57 for more information on connecting the power supply to a computer over the RS-232 interface.

## Parity selection (RS-232)

You can select the parity for RS-232 operation. The power supply is configured for no parity and 8 data bits when shipped from the factory.

The parity can be set from the front-panel only.

- Select one of the following: None (8 data bits), Even (7 data bits), or Odd (7 data bits). When you set the parity, you are indirectly setting the number of data bits.
- The parity selection is stored in non-volatile memory, and does not change when power has been off or after a remote interface reset.

## To set the GPIB address

To configure the power supply for the GPIB interface, proceed as follows:

I/O Config

**1** *Turn on the remote configuration mode.*

**HPIB/488**

You will see the above message on the front-panel display if the power supply has not been changed from the factory-setting. If **RS-232** appears, choose **HPIB/488** by turning the knob to the right.

I/O Config

**2** *Move to the GPIB address setting mode.*

**ADDR 05**

The address is set to 05 when the power supply is shipped from the factory. Notice that a different GPIB address may appear if the power supply has been changed from the factory-setting.

**3** *Turn the knob to change the GPIB address.*

The displayed address is changed when turning the knob to the right or left.

I/O Config

**4** *Save the change and turn off the I/O configuration mode.*

**CHANGE SAVED**

The address is stored in non-volatile memory, and does not change when power has been off or after a remote interface reset. The power supply displays a message to show that the change is now in effect. If the GPIB address is not changed, **NO CHANGE** will be displayed for one second.

**NOTE** To exit the I/O configuration mode without any further changes, press I/O Config until the **NO CHANGE** message is displayed.

## To set the baud rate and parity (RS-232)

To configure the power supply for the RS-232 interface, proceed as follows:

I/O Config

**1** *Turn on the remote configuration mode.*

**HPIB/488**

You will see the above message on the display if the power supply has not been changed from the factory-setting.

Notice that if you changed the remote interface selection to RS-232 before, **RS-232** message will be displayed.

**2** *Choose the RS-232 interface.*

**RS-232**

You can choose the RS-232 interface by turning the knob to the left.

I/O Config

**3** *Move to the RS-232 interface setting mode and select the baud rate.*

**9600 BAUD**

The rate is set to 9600 baud when the power supply is shipped from the factory. Choose from one of the following by turning the knob to the right or left: 300, 600, 1200, 2400, 4800, or 9600 baud.

I/O Config

**4** *Save the change and choose the parity.*

**NONE 8 BITS**

The power supply is configured for 8 data bits with no parity when shipped from the factory. Choose from one of the following by turning the knob to the right or left: None 8 Bits, Odd 7 Bits, or Even 7 Bits. When you set parity, you are indirectly setting the number of the data bits.

I/O Config

**5** *Save the change and turn off the I/O configuration mode.*

**CHANGE SAVED**

The RS-232 baud rate and parity selections are stored in non-volatile memory, and does not change when power has been off or after a remote interface reset. The power supply displays a message to show that the change is now in effect. If the baud rate and the parity are not changed, **NO CHANGE** will be displayed for one second.

**NOTE** To exit the I/O configuration mode without any further changes, press I/O Config until the **NO CHANGE** message is displayed.

# GPIB Interface Configuration

The GPIB connector on the rear panel connects your power supply to the computer and other GPIB devices. Chapter 1, “Getting Started” lists the cables that are available from Agilent Technologies. A GPIB system can be connected together in any configuration (star, linear, or both) as long as the following rules are observed:

- The total number of devices including the computer is not more than 15.
- The total length of all the cables used is not more than 2 m times the number of devices connected together, up to a maximum of 20 m.

**NOTE** IEEE-488 states that you should exercise caution if your individual cable lengths exceed 4 m.

Do not stack more than three connector blocks together on any GPIB connector. Make sure that all connectors are fully seated and that the lock screws are firmly finger tightened.

# RS-232 Interface Configuration

You connect the power supply to the RS-232 interface using the 9-pin (DB-9) serial connector on the rear panel. The power supply is configured as a DTE (Data Terminal Equipment) device. For all communications over the RS-232 interface, the power supply uses two handshake lines: DTR (Data Terminal Ready, on pin 4) and DSR (Data Set Ready, on pin 6).

The following sections contain information to help you use the power supply over the RS-232 interface. The programming commands for RS-232 are explained in "RS-232 Interface Commands" on page 106.

## RS-232 configuration overview

Configure the RS-232 interface using the parameters shown below. Use `I/O Config` at the front-panel to select the baud rate, parity, and number of data bits (refer to "To set the baud rate and parity (RS-232)" on page 54 for more information to configure from the front panel).

### Baud rate:

- 300, 600, 1200, 2400, 4800, or 9600 baud (factory-setting)

### Parity and data bits:

- None/8 data bits (factory-setting), even/7 data bits, or odd/7 data bits

### Number of start bits:

- 1 bit (fixed)

### Number of stop bits:

- 2 bits (fixed)

## RS-232 data frame format

A character frame consists of all the transmitted bits that make up a single character. The frame is defined as the characters from the start bit to the last stop bit, inclusively. Within the frame, you can select the baud rate, number of data bits, and parity type. The power supply uses the following frame formats for seven and eight data bits.

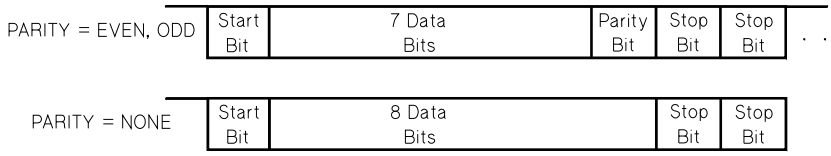


**Figure 2-3** RS-232 data frame format

## Connection to a computer or terminal

To connect the power supply to a computer or terminal, you must have the proper interface cable. Most computers and terminals are DTE (Data Terminal Equipment) devices. Since the power supply is also a DTE device, you must use a DTE-to-DTE interface cable. These cables are also called null-modem, modem-eliminator, or crossover cables.

The interface cable must also have the proper connector on each end and the internal wiring must be correct. Connectors typically have nine pins (DB-9 connector) or 25 pins (DB-25 connector) with a “male” or “female” pin configuration. A male connector has pins inside the connector shell and a female connector has holes inside the connector shell.

If you cannot find the correct cable for your configuration, you may have to use a wiring adapter. If you are using a DTE-to-DTE cable, make sure the adapter is a “straight-through” type. Typical adapters include gender changers, null-modem adapters, and DB-9 to DB-25 adapters.

The cable and adapter diagrams shown below can be used to connect the power supply to most computers or terminals.

### DB-9 serial connection

If your computer or terminal has a 9-pin serial port with a male connector, use the null-modem cable included with the Agilent 34398A Cable Kit. This cable has a 9-pin female connector on each end. The cable pin diagram is shown in Figure 2-4.

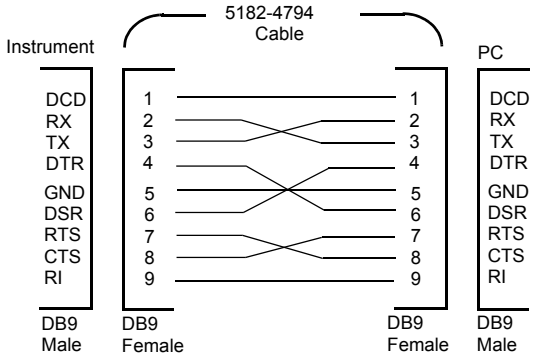


**Figure 2-4** DB-9 serial connection

### DB-25 serial connection

If your computer or terminal has a 25-pin serial port with a male connector, use the null-modem cable and 25-pin adapter included with the Agilent 34398A Cable Kit. The cable and adapter pin diagram are shown in Figure 2-5.

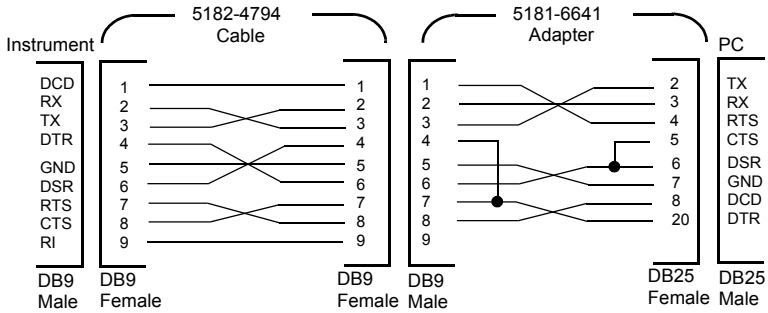


**Figure 2-5** DB-25 serial connection

## DTR/DSR handshake protocol

The power supply is configured as a DTE (Data Terminal Equipment) device and uses the DTR (Data Terminal Ready) and DSR (Data Set Ready) lines of the RS-232 interface to handshake. The power supply uses the DTR line to send a hold-off signal. The DTR line must be TRUE before the power supply will accept data from the interface. When the power supply sets the DTR line FALSE, the data must cease within 10 characters.

To disable the DTR/DSR handshake, do not connect the DTR line and tie the DSR line to logic TRUE. If you disable the DTR/DSR handshake, also select a slower baud rate to ensure that the data is transmitted correctly.

The power supply sets the DTR line FALSE in the following cases:

1. When the power supply's input buffer is full (when approximately 100 characters have been received), it sets the DTR line FALSE (pin 4 on the RS-232 connector). When enough characters have been removed to make space in the input buffer, the power supply sets the DTR line TRUE, unless the second case (see next) prevents this.
2. When the power supply wants to "talk" over the interface (which means that it has processed a query) and has received a <new line> message terminator, it will set the DTR line FALSE. This implies that once a query has been sent to the power supply, the bus controller should read the response before attempting to send more data. It also means that a <new line> must terminate the command string. After the response has been output, the power supply sets the DTR line TRUE again, unless the first case (see above) prevents this.

The power supply monitors the DSR line to determine when the bus controller is ready to accept data over the interface. The power supply monitors the DSR line (pin 6 on the RS-232 connector) before each character is sent. The output is suspended if the DSR line is FALSE. When the DSR line goes TRUE, transmission will resume.

The power supply holds the DTR line FALSE while output is suspended. A form of interface deadlock exists until the bus controller asserts the DSR line TRUE to allow the power supply to complete the transmission. You can break the interface deadlock by sending the <*Ctrl-C*> character, which clears the operation in progress and discards pending output (this is equivalent to the IEEE-488 device clear action).

**NOTE** For the <*Ctrl-C*> character to be recognized reliably by the power supply while it holds DTR FALSE, the bus controller must first set DSR FALSE.

## RS-232 troubleshooting

Here are a few things to check if you are having problems communicating over the RS-232 interface. If you need additional help, refer to the documentation that came with your computer.

- Verify that the power supply and your computer are configured for the same baud rate, parity, and number of data bits. Make sure that your computer is set up for one start bit and two stop bits (these values are fixed on the power supply).
- Make sure to execute the `SYSTem:REMote` command to place the power supply in the remote mode.
- Verify that you have connected the correct interface cable and adapters. Even if the cable has the proper connectors for your system, the internal wiring may be incorrect. The Agilent 34398A Cable Kit can be used to connect the power supply to most computers or terminals.
- Verify that you have connected the interface cable to the correct serial port on your computer (COM1, COM2, etc).

# Calibration

This section gives an overview of the calibration features of the power supply. For more detailed discussion of the calibration procedures, refer to the *Service Guide (E3632- 90010)*.

## Calibration security

This feature allows you to enter a security code to prevent accidental or unauthorized calibrations of the power supply. When you first receive your power supply, it is secured. Before you can calibrate the power supply, you must unsecure it by entering the correct security code.

- The security code is set to “HP003632” when the power supply is shipped from the factory. The security code is stored in non-volatile memory, and does not change when power has been off or after a remote interface reset.
- To secure the power supply from the remote interface, the security code may contain up to 12 alphanumeric characters as shown below. The first character must be a letter, but the remaining characters can be letters or numbers. You do not have to use all 12 characters but the first character must always be a letter.

  A _ _ _ _ _ _ _ _ _ _ _ _ (12 characters)
- To secure the power supply from the remote interface so that it can be unsecured from the front panel, use the eight-character format shown below. The first two characters must be “H P” and the remaining characters must be numbers. Only the last six characters are recognized from the front panel, but all eight characters are required. To unsecure the power supply from the front panel, omit the “H P” and enter the remaining numbers as shown on the following pages.

  H P _ _ _ _ _ _ (8 characters)

**NOTE** If you forget your security code, you can disable the security feature by adding a jumper inside the power supply, and then entering a new code. Refer to the *Service Guide (E3632-90010)* for more information.

## To unsecure for calibration

You can unsecure the power supply either from the front panel or over the remote interface. The power supply is secured when shipped from the factory, and the security code is set to “HP003632”.

### Front panel operation

1 *Select the calibration mode.*

**SECURED**

If the power supply is secured, you will see the above message for one second by holding `Calibrate` for five seconds when you turn on the power supply.

2 *Enter the security code.*

**000000 CODE**

To unsecure the power supply, press `Secure` after the **CAL MODE** message is displayed in the calibration mode, enter the security code using the knob and resolution selection keys, and then press `Secure`.

3 *Save the change and exit the menu.*

**UNSECURED**

When you press `Secure` to save the change, you will see the message above for one second if the security code is correct. The unsecured setting is stored in non-volatile memory, and does not change when power has been off or after a remote interface reset. To exit the calibration mode, turn the power off and on.

Notice that if you enter the wrong security code, **INVALID** is displayed and the code entering mode is displayed for you to enter the correct code.

### Remote interface operation

| | |
|---|---|
| `CAL:SEC:STAT {OFF\|ON},<code>` | *Secure or unsecure the power supply.* |

To unsecure the power supply, send the above command with the same code used to secure. For example:

```
CAL:SEC:STAT OFF, HP003632
```

## To secure against calibration

You can secure the power supply against calibration either from the front panel or over the remote interface. The power supply is secured when shipped from the factory, and the security code is set to "HP003632".

Read the security code rules at "Calibration security" on page 63 before attempting to secure the power supply.

### Front panel operation

1 *Select the calibration mode.*

**UNSECURED**

If the power supply is unsecured, you will see the above message for one second by holding [Calibrate] for five seconds when you turn on the power supply.

2 *Enter the security code.*

**000000 CODE**

To secure the power supply, press [Secure] after the **CAL MODE** message is displayed in the calibration mode, enter the security code using the knob and resolution selection keys, and then press [Secure].

3 Save the change and exit the menu.

**SECURED**

When you press [Secure] to save the change, you will see the message below. The secured setting is stored in non-volatile memory, and does not change when power has been off or after a remote interface reset. To exit the calibration mode, turn the power off and on.

### Remote interface operation

| | |
|---|---|
| `CAL:SEC:STAT {OFF\|ON},<code>` | *Secure or unsecure the power supply.* |

To secure the power supply, send the above command with the same code as used to unsecure. For example,

```
CAL:SEC:STAT ON, HP003632
```

## To change the security code

To change the security code, you must first unsecure the power supply, and then enter a new code. Read the security code rules at "Calibration security" on page 63 before attempting to secure the power supply.

### Front panel operation

To change the security code, first make sure that the power supply is unsecured. Press [Secure] after the **CAL MODE** message is displayed in the calibration mode, enter the new security code using the knob and resolution selection keys, then press [Secure].

Changing the code from the front panel also changes the code as seen from the remote interface.

### Remote interface operation

| | |
|---|---|
| `CAL:SEC:CODE <new code>` | *Change the security code.* |

To change the security code, first unsecure the power supply using the old security code. Then, enter the new code as shown below.

| | |
|---|---|
| `CAL:SEC:STAT OFF, HP003632` | *Unsecure with the old code.* |
| `CAL:SEC:CODE ZZ001443` | *Enter the new code.* |
| `CAL:SEC:STAT ON, ZZ001443` | *Secure with the new code.* |

## Calibration count

You can determine the number of times that your power supply has been calibrated. Your power supply was calibrated before it left the factory. When you receive your power supply, read the count to determine its initial value.

The calibration count feature can be performed from the remote interface only.

- The calibration count is stored in non-volatile memory, and does not change when power has been turned off or after a remote interface reset.
- The calibration count increments up to a maximum of 32767 after which it wraps-around to 0. Since the value increments by one for each calibration point, a complete calibration will increase the value by five counts.

### Remote interface operation

| | |
|---|---|
| `CAL:COUN?` | Query the number of times of calibration |

## Calibration message

You can use the calibration message feature to record calibration information about your power supply. For example, you can store such information as the last calibration date, the next calibration due date, the power supply's serial number, or even the name and phone number of the person to contact for a new calibration.

You can record and read information in the calibration message from the remote interface only.

- The power supply should be unsecured before sending a calibration message.
- The calibration message may contain up to 40 characters.
- The calibration message is stored in non-volatile memory, and does not change when power has been off or after a remote interface reset.

### Remote interface operation

| | |
|---|---|
| `CAL:STR <quoted string>` | *Store the cal message.* |

To store the calibration message, send the following command.

```
CAL:STR 'CAL 12-05-99'
```

# 3
# Remote Interface Reference

SCPI Command Summary 70
Introduction to the SCPI Language 74
Simplified Programming Overview 80
Using the APPLy Command 83
Output Settings and Operation Commands 85
Triggering Commands 93
System-Related Commands 96
Calibration Commands 102
RS-232 Interface Commands 106
SCPI Status Registers 107
Status Reporting Commands 117
Halting an Output in Progress 121
SCPI Conformance Information 122
IEEE-488 Conformance Information 125

This chapter lists the SCPI commands.

# SCPI Command Summary

**NOTE** If you are a first-time user of the SCPI language, refer to "Introduction to the SCPI Language" and "Simplified Programming Overview" to familiarize with the SCPI language before attempting to program the power supply.

This section summarizes the Standard Commands for Programmable Instruments (SCPI) available to program the power supply over the remote interface. Refer to the respective sections in this chapter for more details on each command.

Throughout this manual, the following conventions are used for the SCPI command syntax.

- Square brackets (`[]`) indicate optional keywords or parameters.
- Braces (`{}`) enclose parameters within a command string.
- Triangle brackets (<>) indicate that you must substitute a value or a code for the enclosed parameter.
- A vertical bar (`|`) separates one of two or more alternative parameters.

**Table 3-1** SCPI command summary

### Output Settings and Operation Commands

```
APPLy {<voltage>|DEF|MIN|MAX}[,{<current>|DEF|MIN|MAX}]
APPLy?
[SOURce:]
   CURRent[:LEVel][:IMMediate][:AMPLitude]{<current>|MIN|MAX|UP|DOWN}
   CURRent[:LEVel][:IMMediate][:AMPLitude]? [MIN|MAX]
   CURRent[:LEVel][:IMMediate]:STEP[:INCRement] {<numeric value> |DEFault}
   CURRent[:LEVel][:IMMediate]:STEP[:INCRement]? {DEFault}
   CURRent[:LEVel]:TRIGgered[:AMPLitude] {<current>|MIN|MAX}
   CURRent[:LEVel]:TRIGgered[:AMPLitude]? [MIN|MAX]
   CURRent:PROTection[:LEVel] {<current>|MIN|MAX}
   CURRent:PROTection[:LEVel]? {MIN|MAX}
   CURRent:PROTection:STATe {0|1|OFF|ON}
   CURRent:PROTection:STATe?
   CURRent:PROTection:TRIPped?
   CURRent:PROTection:CLEar
   VOLTage[:LEVel][:IMMediate][:AMPLitude]{<voltage>|MIN|MAX|UP|DOWN}
   VOLTage[:LEVel][:IMMediate][:AMPLitude]? [MIN|MAX]
   VOLTage[:LEVel][:IMMediate]:STEP[:INCRement] {<numeric value>|DEFault}
   VOLTage[:LEVel][:IMMediate]:STEP[:INCRement]? {DEFault}
   VOLTage[:LEVel]:TRIGgered[:AMPLitude] {<voltage>|MIN|MAX}
   VOLTage[:LEVel]:TRIGgered[:AMPLitude]? [MIN|MAX]
   VOLTage:PROTection[:LEVel] {<voltage>|MIN|MAX}
   VOLTage:PROTection[:LEVel]? {MIN|MAX}
   VOLTage:PROTection:STATe {0|1|OFF|ON}
   VOLTage:PROTection:STATe?
   VOLTage:PROTection:TRIPped?
   VOLTage:PROTection:CLEar
   VOLTage:RANGe {P15V|P30V|LOW|HIGH}
   VOLTage:RANGe?
MEASure
   :CURRent[:DC]?
   [:VOLTage][:DC]?
```

### Triggering Commands

```
INITiate[:IMMediate]
TRIGger[:SEQuence]
   :DELay {<seconds>|MIN|MAX}
   :DELay?
   :SOURce {BUS|IMM}
   :SOURce?
*TRG
```

**Table 3-1** SCPI command summary (continued)

### System-Related Commands

```
DISPlay[:WINDow]
    [:STATe] {OFF|ON}
    [:STATe]?
    :TEXT[:DATA] <quoted string>
    :TEXT[:DATA]?
    :TEXT:CLEar
SYSTem
    :BEEPer[:IMMediate]
    :ERRor?
    :VERSion?
OUTPut
    :RELay[:STATe] {OFF|ON}
    :RELay[:STATe]?
    [:STATe] {OFF|ON}
    [:STATe]?
*IDN?
*RST
*TST?
*SAV {1|2|3}
*RCL {1|2|3}
```

### Calibration Commands

```
CALibration
    :COUNt?
    :CURRent[:DATA] <numeric value>
    :CURRent:LEVel {MIN|MID|MAX}
    :CURRent:PROTection
    :DAC:ERRor
    :SECure:CODE <new code>
    :SECure:STATe {OFF|ON},<code>
    :SECure:STATe?
    :STRing <quoted string>
    :STRing?
    :VOLTage[:DATA] <numeric value>
    :VOLTage:LEVel {MIN|MID|MAX}
    :VOLTage:PROTection
```

### RS-232 Interface Commands

```
SYSTem
    :LOCal
    :REMote
    :RWLock
```

**Table 3-1** SCPI command summary (continued)

### Status Reporting Commands

```
STATus:QUEStionable
   :CONDition?
   [:EVENt]?
   :ENABle <enable value>
   :ENABle?
SYSTem:ERRor?
*CLS
*ESE <enable value>
*ESE?
*ESR?
*OPC
*OPC?
*PSC {0|1}
*PSC?
*SRE <enable value>
*SRE?
*STB?
*WAI
```

### IEEE-488 Conformance Information

```
*CLS
*ESE <enable value>
*ESE?
*ESR?
*IDN?
*OPC
*OPC?
*PSC {0|1}
*PSC?
*RST
*SAV {1|2|3}
*RCL {1|2|3}
*SRE <enable value>
*SRE?
*STB?
*TRG
*TST?
*WAI
```

# Introduction to the SCPI Language

Standard Commands for Programmable Instruments (SCPI) is an ASCII-based instrument command language designed for test and measurement instruments. Refer to "Simplified Programming Overview" for an introduction to the basic techniques used to program the power supply over the remote interface.

SCPI commands are based on a hierarchical structure, also known as a tree system. In this system, associated commands are grouped together under a common node or root, thus forming subsystems. A portion of the `SOURce` subsystem is shown below to illustrate the tree system.

```
[SOURce:]
  CURRent {<current>|MIN|MAX|UP|DOWN}
  CURRent? [MIN|MAX]
  CURRent:
    TRIGgered {<current>|MIN|MAX}
    TRIGgered? {MIN|MAX}
  VOLTage {<voltage>|MIN|MAX|UP|DOWN}
  VOLTage? [MIN|MAX]
  VOLTage:
    TRIGgered {<voltage>|MIN|MAX}
    TRIGgered? {MIN|MAX}
```

`SOURce` is the root keyword of the command, `CURRent` and `VOLTage` are second-level keywords, and `TRIGgered` is the third-level keyword. A colon (`:`) separates a command keyword from a lower-level keyword.

## Command format used in this manual

The format used to show commands in this manual is shown below:

```
CURRent {<current>|MINimum|MAXimum|UP|DOWN}
```

The command syntax shows most commands (and some parameters) as a mixture of upper-case and lower-case letters. The upper-case letters indicate the abbreviated spelling for the command. For shorter program lines, send the abbreviated form. For better program readability, send the long form.

For example, in the above syntax statement, `CURR` and `CURRENT` are both acceptable forms. You can use upper-case or lower-case letters. Therefore, `CURRENT`, `curr`, and `Curr` are all acceptable. Other forms, such as `CUR` and `CURREN`, will generate an error.

Braces (`{}`) enclose the parameter choices for a given command string. The braces are not sent with the command string.

A vertical bar (`|`) separates multiple parameter choices for a given command string.

Triangle brackets (`<>`) indicate that you must specify a value for the enclosed parameter. For example, the above syntax statement shows the current parameter enclosed in triangle brackets. The brackets are not sent with the command string. You must specify a value for the parameter (such as `CURR 0.1`).

Some parameters are enclosed in square brackets (`[]`). The brackets indicate that the parameter is optional and can be omitted. The brackets are not sent with the command string. If you do not specify a value for an optional parameter, the power supply chooses a default value.

Some portions of commands are enclosed in square brackets ([]). The brackets indicate that this portion of the command is optional. Most optional portions of the command are not shown in the command description. For the full command showing all the options, refer to Table 3-1.

A colon (:) separates a command keyword from a lower-level keyword. You must insert a blank space to separate a parameter from a command keyword. If a command requires more than one parameter, you must separate adjacent parameters using a comma as shown below:

```
SOURce:CURRent:TRIGgered
APPLy 3.5,1.5
```

## Command separators

A colon (:) is used to separate a command keyword from a lower-level keyword as shown below:

```
SOURce:CURRent:TRIGgered
```

A semicolon (;) is used to separate two commands within the same subsystem, and can also minimize typing. For example, sending the following command string,

```
SOUR:VOLT MIN;CURR MAX
```

is the same as sending the following two commands:

```
SOUR:VOLT MIN
SOUR:CURR MAX
```

Use a colon and a semicolon to link commands from different subsystems. For example, in the following command string, an error is generated if you do not use the colon and semicolon:

```
DISP:TEXT:CLE;:SOUR:CURR MIN
```

## Using the MIN and MAX parameters

You can substitute `MINimum` or `MAXimum` in place of a parameter for many commands. For example, consider the following command:

```
CURRent {<current>|MIN|MAX}
```

Instead of selecting a specific current, you can substitute `MINimum` to set the current to its minimum value or `MAXimum` to set the current to its maximum value.

## Querying parameter settings

You can query the value of most parameters by adding a question mark (?) to the command. For example, the following command sets the output current to 5 A:

```
CURR 5
```

You can query the value by executing:

```
CURR?
```

You can also query the maximum or minimum value allowed with the present function as follows:

```
CURR? MAX
```

```
CURR? MIN
```

**CAUTION** If you send two query commands without reading the response from the first, and then attempt to read the second response, you may receive some data from the first response followed by the complete second response. To avoid this, do not send a query command without reading the response. When you cannot avoid this situation, send a device clear before sending the second query command.

## SCPI command terminators

A command string sent to the power supply must terminate with a <new line> character. The IEEE-488 EOI (end-or-identify) message is interpreted as a <new line> character and can be used to terminate a command string in place of a <new line> character. A <carriage return> followed by a <new line> is also accepted. Command string termination will always reset the current SCPI command path to the root level. The <new line> character has the ASCII decimal code of 10.

## IEEE-488.2 common commands

The IEEE-488.2 standard defines a set of common commands that perform functions like reset, self-test, and status operations. Common commands always begin with an asterisk (*), are four to five characters in length, and may include one or more parameters. The command keyword is separated from the first parameter by a blank space. Use a semicolon (;) to separate multiple commands as shown below:

```
*RST; *CLS; *ESE 32; *OPC?
```

## SCPI parameter types

The SCPI language defines several different data formats to be used in program messages and response messages.

### Numeric parameters

Commands that require numeric parameters will accept all commonly used decimal representations of numbers including optional signs, decimal points, and scientific notation. Special values for numeric parameters like MINimum, MAXimum, and DEFault are also accepted.

You can also send engineering unit suffixes (V, A, or SEC) with numeric parameters. If only specific numeric values are accepted, the power supply will automatically round the input numeric parameters. The following command uses a numeric parameter:

```
CURR {<current>|MIN|MAX|UP|DOWN}
```

### Discrete parameters

Discrete parameters are used to program settings that have a limited number of values such as `BUS` and `IMM`. Query responses will always return the short form in all upper-case letters. The following command uses discrete parameters:

```
TRIG:SOUR {BUS|IMM}
```

### Boolean parameters

Boolean parameters represent a single binary condition that is either true or false. For a false condition, the power supply will accept `OFF` or `0`. For a true condition, the power supply will accept `ON` or `1`. When you query a boolean setting, the power supply will always return `0` or `1`. The following command uses a boolean parameter:

```
DISP {OFF|ON}
```

### String parameters

String parameters can contain virtually any set of ASCII characters. A string must begin and end with matching quotes; either with a single quote or with a double quote. You can include the quote delimiter as part of the string by typing it twice without any characters in between. The following command uses a string parameter:

```
DISP:TEXT <quoted string>
```

# Simplified Programming Overview

This section gives an overview of the basic techniques used to program the power supply over the remote interface. This section is only an overview and does not give all of the details you will need to write your own application programs. Refer to the remainder of this chapter and also Chapter 5, “Application Programs” for more details and examples. Also refer to the programming reference manual that came with your computer for details on outputting command strings and entering data.

## Using the APPLy command

The `APPLy` command provides the most straightforward method to program the power supply over the remote interface. For example, the following statement executed from your computer will set the power supply to an output of 3 V rated at 1 A:

```
APPL 3.0, 1.0
```

## Using the low-level commands

Although the `APPLy` command provides the most straightforward method to program the power supply, the low-level commands give you more flexibility to change individual parameters. For example, the following statements executed from your computer will set the power supply to an output of 3 V rated at 1 A:

| | |
|---|---|
| `VOLT 3.0` | *Set the output voltage to 3.0 V.* |
| `CURR 1.0` | *Set the output current to 1.0 A.* |

## Reading a query response

Only the query commands (commands that end with "?") will instruct the power supply to send a response message. Queries return either output values or internal instrument settings. For example, the following statements executed from your computer will read the power supply's error queue and print the most recent error:

| | |
|---|---|
| `dimension statement` | *Dimension string array (80 elements).* |
| `SYST:ERR?` | *Read the error queue.* |
| `bus enter statement` | *Enter the error string into the computer.* |
| `print statement` | *Print the error string.* |

## Selecting a trigger source

The power supply will accept a bus (software) trigger or an immediate internal trigger as a trigger source. By default, the BUS trigger source is selected. If you want the power supply to use an immediate internal trigger, you must select `IMMediate`. For example, the following statements executed from your computer will set to an output of 3 V/1 A immediately:

| | |
|---|---|
| `VOLT:TRIG 3.0` | *Set the triggered voltage level to 3.0 V.* |
| `CURR:TRIG 1.0` | *Set the triggered current level to 1.0 A.* |
| `TRIG:SOUR IMM` | *Select the immediate trigger as a source.* |
| `INIT` | *Cause the trigger system to initiate.* |

## Power supply programming ranges

The `SOURce` subsystem requires parameters for programming values. The available programming value for a parameter varies according to the desired output range of the power supply. Table 3-2 lists the programming values available and the `MINimum`, `MAXimum`, `DEFault`, and reset values of your power supply.

Refer to Table 3-2 to identify the programming values when programming the power supply.

**Table 3-2** Agilent E3632A programming ranges

| | | 0 to 15 V /7 A range | 0 to 30 V /4 A range |
|---|---|---|---|
| Voltage | Programming range | 0 V to 15.45 V | 0 V to 30.90 V |
| | MAX value | 15.45 V | 30.90 V |
| | MIN value | 0 V | |
| | DEFault value | 0 V | |
| | *RST value | 0 V | |
| Current | Programming range | 0 A to 7.21 A | 0 A to 4.12 A |
| | MAX value | 7.21 A | 4.12 A |
| | MIN value | 0 A | |
| | DEFault value | 7 A | 4 A |
| | *RST value | 7 A | |

# Using the APPLy Command

The APPLy command provides the most straightforward method to program the power supply over the remote interface. You can select the output voltage and current in one command.

## APPLy {<voltage>| DEF | MIN | MAX}[,{<current>| DEF | MIN | MAX}]

This command is a combination of VOLTage and CURRent commands. As long as the newly programmed values are within the presently selected range, the output voltage and current are changed as soon as the command is executed.

The APPLy command changes the power supply's output to the newly programmed values only if the programmed values are valid within the presently selected range. An execution error will occur if the programmed values are not valid within the selected range.

You can substitute MINimum, MAXimum, or DEFault in place of a specific value for the voltage and current parameters. MIN selects the lowest values of 0 V and 0 A. MAX selects the highest values allowed for the selected range.

The default values of voltage and current are 0 V and 7 A regardless of the presently selected range. For more details of parameters, refer to Table 3-2 for each model.

If you specify only one parameter of the APPLy command, the power supply regards it as the voltage setting value.

## APPLy?

This command queries the power supply's present voltage and current setting values and returns a quoted string. The voltage and current are returned in sequence as shown in the sample string below (the quotation marks are returned as part of the string).

```
"15.00000, 4.00000"
```

In the above string, the first number 15.00000 is the voltage setting value and the second number 4.00000 is the current setting value.

# Output Settings and Operation Commands

This section describes low-level commands used to program the power supply. Although the APPLy command provides the most straightforward method to program the power supply, the low-level output setting commands give you more flexibility to change the individual parameters.

### CURRent {<current>|MINimum|MAXimum|UP|DOWN}

This command programs the immediate current level of the power supply. The immediate level is the current value of the output terminals.

The CURRent command changes the output of the power supply to the newly programmed value regardless of the output range presently selected.

You can substitute MINimum or MAXimum in place of a specific value for the current parameter. MIN selects the lowest current values of 0 A. MAX selects the highest current values allowed for the selected range.

This command also increases or decreases the immediate current level using the UP or DOWN parameter by a predetermined amount. The command CURRent:STEP sets the amount of increment and decrement. Notice that a new increment setting will cause an execution error -222 (Data out of range) when the maximum or the minimum rated current is exceeded.

### CURRent? [MINimum|MAXimum]

This query returns the presently programmed current level of the power supply. CURR? MAX and CURR? MIN return the highest and lowest programmable current levels for the selected range.

### CURRent:STEP {<numeric value>|DEFault}

Set the step size for current programming with the CURRent UP and CURRent DOWN commands. See the example as shown in "Example" on page 86.

To set the step size to the minimum resolution, set the step size to DEFault. The minimum resolution of the step size is approximately 0.12 mA. The CURR:STEP? DEF returns the minimum resolution of your instrument. The immediate current level increases or decreases by the value of the step size. For example, the output current will increase or decrease 10 mA if the step size is 0.01.

This command is useful when you program the power supply to the allowed minimum resolution. At *RST, the step size is the value of the minimum resolution.

### CURRent:STEP? [DEFault]

This query returns the value of the step size currently specified. The returned parameter is a numeric value. DEFault gives the minimum resolution of the step size in unit of amps.

#### Example

The following program segments show how to use the CURR UP or CURR DOWN command to increase or decrease the output current with the CURR:STEP command.

| | |
|---|---|
| CURR:STEP 0.01 | *Set the step size to 0.01 A.* |
| CURR UP | *Increase the output current.* |
| CURR:STEP 0.02 | *Set the step size to 0.02 A.* |
| CURR DOWN | *Decrease the output current.* |

### CURRent:TRIGgered {<current>|MINimum|MAXimum}

This command programs the pending triggered current level. The pending triggered current level is a stored value that is transferred to the output terminals when a trigger occurs. A pending triggered level is not affected by subsequent `CURRent` commands.

### CURRent:TRIGgered? [MINimum|MAXimum]

This query returns the triggered current level presently programmed. If no triggered level is programmed, the `CURRent` level is returned. `CURR:TRIG? MAX` and `CURR:TRIG? MIN` return the highest and lowest programmable triggered current levels.

### CURRent:PROTection {<current>|MINimum|MAXimum}

This command sets the current level at which the overcurrent protection (OCP) circuit will trip. If the peak output current exceeds the OCP level, then the output current is programmed to zero. The Questionable Status register "OC" bit is set (refer to "SCPI status system" on page 108). An overcurrent condition can be cleared with the `CURR:PROT:CLE` command after the condition that caused the OCP trip is removed.

### CURRent:PROTection? {MINimum|MAXimum}

This query returns the overcurrent protection trip level presently programmed. `CURR:PROT? MAX` and `CURR:PROT? MIN` return the maximum and minimum programmable overcurrent trip levels.

### CURRent:PROTection:STATe {0|1|OFF|ON}

This command enables or disables the overcurrent protection function of the power supply. An overcurrent condition can be cleared with the `CURR:PROT:CLE` command after the condition that caused the OCP trip is removed. At `*RST`, this value is set to ON.

### CURRent:PROTection:STATe?

This query returns the state of the overcurrent protection function. The returned parameter is `0` (OFF) or `1` (ON).

### CURRent:PROTection:TRIPped?

This query returns a `1` if the overcurrent protection circuit is tripped and not cleared or a `0` if not tripped.

### CURRent:PROTection:CLEar

This command causes the overcurrent protection circuit to be cleared. After this command, the output current is restored to the state it was in before the current protection tripped and the OCP trip level remains unchanged to the value presently programmed. Before sending this command, lower the output current below the trip OCP point, or raise the OCP trip level above the output setting.

### VOLTage {<voltage>|MINimum|MAXimum|UP|DOWN}

This command programs the immediate voltage level of the power supply. The immediate level is the voltage value of the output terminals.

The `VOLTage` command changes the output of the power supply to the newly programmed value regardless of the output range presently selected.

You can substitute `MINimum` or `MAXimum` in place of a specific value for the voltage parameter. `MIN` selects the lowest voltage values of 0 V. `MAX` selects the highest voltage values allowed for the selected range.

This command also increases or decreases the immediate voltage level using the UP or DOWN parameter by a predetermined amount. The command VOLTage:STEP sets the amount of increment and decrement. Notice that a new increment setting will cause an execution error -222 (Data out of range) when the maximum or the minimum rated voltage is exceeded.

### VOLTage? [MINimum|MAXimum]

This query returns the presently programmed voltage level of the power supply. VOLT? MAX and VOLT? MIN return the highest and lowest programmable voltage levels for the selected range.

### VOLTage:STEP {<numeric value>|DEFault}

This command sets the step size for voltage programming with the VOLT UP and VOLT DOWN commands.

To set the step size to the minimum resolution, set the step size to DEFault. The minimum resolution of the step size is approximately 0.55 mV. The VOLT:STEP? DEF returns the minimum resolution of your instrument. The immediate voltage level increases or decreases by the value of the step size. For example, the output voltage will increase or decrease 10 mV if the step size is 0.01.

This command is useful when you program the power supply to the allowed minimum resolution. At *RST, the step size is the value of the minimum resolution.

### VOLTage:STEP? [DEFault]

This query returns the value of the step size currently specified. The returned parameter is a numeric value. DEFault gives the minimum resolution step size in unit of volts.

### Example

The following program segments show how to use the `VOLT UP` or `VOLT DOWN` command to increase or decrease the output voltage with the `VOLT:STEP` command.

| | |
|---|---|
| `VOLT:STEP 0.01` | *Set the step size to 0.01 V.* |
| `VOLT UP` | *Increase the output voltage.* |
| `VOLT:STEP 0.02` | *Set the step size to 0.02 V.* |
| `VOLT DOWN` | *Decrease the output voltage.* |

### VOLTage:TRIGgered {<voltage>|MINimum|MAXimum}

This command programs the pending triggered voltage level. The pending triggered voltage level is a stored value that is transferred to the output terminals when a trigger occurs. A pending triggered level is not affected by subsequent `VOLTage` commands.

### VOLTage:TRIGgered? [MINimum|MAXimum]

This query returns the triggered voltage level presently programmed. If no triggered level is programmed, the `VOLT` level is returned. `VOLT:TRIG? MAX` and `VOLT:TRIG? MIN` return the highest and lowest programmable triggered voltage levels.

### VOLTage:PROTection {<voltage>|MINimum|MAXimum}

This command sets the voltage level at which the overvoltage protection (OVP) circuit will trip. If the peak output voltage exceeds the OVP level, then the power supply output is shorted by an internal SCR. The Questionable Status register "OV" bit is set (refer to "SCPI status system" on page 108). An overvoltage condition can be cleared with the `VOLT:PROT:CLE` command after the condition that caused the OVP trip is removed.

### VOLTage:PROTection? [MINimum|MAXimum]

This query returns the overvoltage protection trip level presently programmed. `VOLT:PROT? MAX` and `VOLT:PROT? MIN` return the maximum and minimum programmable overvoltage trip levels.

### VOLTage:PROTection:STATe {0|1|OFF|ON}

This command enables or disables the overvoltage protection function. An overvoltage condition can be cleared with the `VOLT:PROT:CLE` command after the condition that caused the OVP trip is removed. At `*RST`, this value is set to ON.

### VOLTage:PROTection:STATe?

This query returns the state of the overvoltage protection function. The returned parameter is `0` (OFF) or `1` (ON).

### VOLTage:PROTection:TRIPped?

This query returns a `1` if the overvoltage protection circuit is tripped and not cleared or a `0` if not tripped.

### VOLTage:PROTection:CLEar

This command causes the overvoltage protection circuit to be cleared. After this command, the output voltage is restored to the state it was in before the protection feature occurred and the OVP trip level remains unchanged to the value presently programmed. Before sending this command, lower the output voltage below the OVP trip point, or raise the OVP trip level above the output setting.

### VOLTage:RANGe {P15V|P30V||LOW|HIGH}

This command selects an output range to be programmed by the identifier. When 15 V/7 A range is selected, the maximum programmable voltage and current are limited to 15.45 V and 7.21 A. When 30 V/4 A range is selected, the maximum programmable voltage and current are limited to 30.90 V and 4.12 A. `P30V` or `HIGH` is the identifier for the 0 V/4 A range and `P15V` or `LOW` is for the 15 V/7 A range. At `*RST`, the 15 V/7 A range is selected.

### VOLTage:RANGe?

This query returns the currently selected range. The returned parameter is `P30V` (HIGH) or `P15V` (LOW).

### MEASure:CURRent?

This query returns the current measured across the current sense resistor inside the power supply.

### MEASure[:VOLTage]?

This query returns the voltage measured at the sense terminals of the power supply.

# Triggering Commands

The power supply's triggering system allows a change in voltage and current when receiving a trigger, to select a trigger source, and to insert a trigger. Triggering the power supply is a multi-step process.

- First, you must specify the source from which the power supply will accept the trigger. The power supply will accept a bus (software) trigger or an immediate trigger from the remote interface.
- Then, you can set the time delay between the detection of the trigger on the specified trigger source and the start of any corresponding output change. Notice that the time delay is valid for only the bus trigger source.
- Finally, you must provide an `INITiate` command. If the `IMMediate` source is selected, the selected output is set to the triggered level immediately. But if the trigger source is the bus, the power supply is set to the triggered level after receiving the Group Execute Trigger (GET) or `*TRG` command.

## Trigger source choices

You must specify the source from which the power supply will accept a trigger. The trigger is stored in volatile memory; the source is set to bus when the power supply has been turned off or after a remote interface reset.

### Bus (software) triggering

- To select the bus trigger source, send the following command.

  ```
  TRIG:SOUR BUS
  ```

- To trigger the power supply from the remote interface (GPIB or RS-232) after selecting the bus source, send the `*TRG` (trigger) command. When the `*TRG` command is sent, the trigger action starts after the specified time delay if any delay is given.
- You can also trigger the power supply from the GPIB interface by sending the IEEE-488 Group Execute Trigger (`GET`) message. The following statement shows how to send a `GET` from a Hewlett-Packard controller.

  `TRIGGER 705` (group execute trigger)
- To ensure synchronization when the bus source is selected, send the `*WAI` (wait) command. When the `*WAI` command is executed, the power supply waits for all pending operations to complete before executing any additional commands. For example, the following command string guarantees that the first trigger is accepted and is executed before the second trigger is recognized.

  `TRIG:SOUR BUS;*TRG;*WAI;*TRG;*WAI`
- You can use the `*OPC?` (operation complete query) command or the `*OPC` (operation complete) command to signal when the operation is complete. The `*OPC?` command returns `1` to the output buffer when the operation is complete. The `*OPC` command sets the OPC bit (bit 0) in the Standard Event register when the operation is complete.

### Immediate triggering

- To select the immediate trigger source, send the following command.

  `TRIG:SOUR IMM`
- When `IMMediate` is selected as a trigger source, an `INITiate` command immediately transfers the `VOLT:TRIG` or `CURR:TRIG` value to the `VOLT` or `CURR` value. Any delay is ignored.

# Triggering commands

### INITiate

Cause the trigger system to initiate. This command completes one full trigger cycle when the trigger source is an immediate and initiates the trigger subsystem when the trigger source is bus.

### TRIGger:DELay {<seconds>|MINimum|MAXimum}

Set the time delay between the detection of an event on the specified trigger source and the start of any corresponding trigger action on the power supply output. Select from 0 to 3600 seconds. MIN = 0 seconds. MAX = 3600 seconds. At `*RST`, this value is set to 0 seconds.

### TRIGger:DELay? [MINimum|MAXimum]

This query returns the trigger delay.

### TRIGger:SOURce {BUS|IMMediate}

Select the source from which the power supply will accept a trigger. The power supply will accept a bus (software) trigger or an internal immediate trigger. At `*RST`, the bus trigger source is selected.

### TRIGger:SOURce?

This query returns the present trigger source. Returns `BUS` or `IMM`.

### *TRG

Generate a trigger to the trigger subsystem that has selected a bus (software) trigger as its source (`TRIG:SOUR BUS`). The command has the same effect as the Group Execute Trigger (`GET`) command. For RS-232 operation, make sure the power supply is in the remote interface mode by sending the `SYST:REM` command first.

# System-Related Commands

### DISPlay {OFF|ON}

Turn the front-panel display off or on. When the display is turned off, outputs are not sent to the display and all annunciators are disabled except the **ERROR** annunciator.

The display state is automatically turned on when you return to the local mode. Press Local to return to the local state from the remote interface.

### DISPlay?

This query returns the front-panel display setting. Returns 0 (OFF) or 1 (ON).

### DISPlay:TEXT <quoted string>

Display a message on the front panel. The power supply will display up to 12 characters in a message; any additional characters are truncated. Commas, periods, and semicolons share a display space with the preceding character, and are not considered individual characters.

### DISPlay:TEXT?

This query returns the message sent to the front panel and returns a quoted string.

### DISPlay:TEXT:CLEar

Clear the message displayed on the front panel.

### OUTPut {OFF|ON}

Enable or disable the outputs of the power supply. When the output is disabled, the voltage value is 0 V and the current value is 20 mA. At *RST, the output state is OFF.

### OUTPut?

This query returns the output state of the power supply. The returned value is `0` (OFF) or `1` (ON).

### OUTPut:RELay {OFF|ON}

This command sets the state of two TTL signals on the RS-232 connector. These signals are intended for use with an external relay and relay driver. The TTL output is available on the RS-232 connector pin 1 and pin 9. When the `OUTPut:RELay` state is ON, the TTL output of pin 1 is high (4.5 V) and pin 9 is low (0.5 V). The levels are reversed when the `OUTPut:RELay` state is OFF. At `*RST`, the `OUTPut:RELay` state is OFF.

TTL output of pin 1 or pin 9 of the RS-232 connector is available only after installing two jumpers inside the power supply. Refer to the *Service Guide* for more information.

**NOTE** Do not use the RS-232 interface if you have configured the power supply to output relay control signals. Internal components on the RS-232 circuitry may be damaged.

### OUTPut:RELay?

This command returns the state of the TTL relay logic signals. See also `OUTP:REL` command.

### SYSTem:BEEPer

Issue a single beep immediately.

### SYSTem:ERRor?

This command queries the power supply's error queue. When the front-panel **ERROR** annunciator turns on, one or more command syntax or hardware errors have been detected. Up to 20 errors can be stored in the error queue. See Chapter 4, "Error Messages" for more details.

- Errors are retrieved in the first-in-first-out (FIFO) order. The first error returned is the first error that was stored. When you have read all errors from the queue, the **ERROR** annunciator turns off. The power supply beeps once each time an error is generated.
- If more than 20 errors have occurred, the last error stored in the queue (the most recent error) is replaced with -350, "Queue overflow". No additional errors are stored until you remove errors from the queue. If no errors have occurred when you read the error queue, the power supply responds with +0, "No error".
- The error queue is cleared when power has been off or after a `*CLS` (clear status) command has been executed. The `*RST` (reset) command does not clear the error queue.

### SYSTem:VERSion?

This query returns the power supply to determine the present SCPI version. The returned value is a string in the form of `YYYY.V` where the `Y` represents the year of the version, and the `V` represents a version number for that year (for example, `1995.0`).

### *IDN?

This query command reads the power supply's identification string. The power supply returns four fields separated by commas. The first field is the manufacturer's name, the second field is the model number, the third field is not used (always 0), and the fourth field is a revision code which contains three numbers. The first number is the firmware revision number for the main power supply processor; the second is for the input/output processor; and the third is for the front-panel processor.

The command returns a string with the following format (be sure to dimension a string variable with at least 40 characters):

```
HEWLETT-PACKARD,E3632A,0,X.X-X.X-X.X
```

### *RST

This command resets the power supply to its power-on state as follows:

**Table 3-3** Power supply state

| Command | State |
|---|---|
| CURR | 7 A |
| CURR:STEP | 0.12 mA (typical value) |
| CURR:TRIG | 7 A |
| CURR:PROT | 7.5 A |
| CURR:PROT:STAT | ON |
| DISP | ON |
| OUTP | OFF |
| OUTP:REL | OFF |
| TRIG:DEL | 0 |
| TRIG:SOUR | BUS |

**Table 3-3** Power supply state (continued)

| Command | State |
|---|---|
| VOLT | 0 V |
| VOLT:STEP | 0.55 mV (typical value) |
| VOLT:TRIG | 0 V |
| VOLT:PROT | 32 V |
| VOLT:PROT:STAT | ON |
| VOLT:RANG | P15V (Low) |

### *TST?

This query performs a complete self-test of the power supply. Returns 0 if the self-test passes or 1 or any non-zero value if it fails. If the self-test fails, an error message is also generated with additional information on why the test has failed.

### *SAV {1|2|3}

This command stores the present state of the power supply to the specified location in non-volatile memory. Three memory locations (numbered 1, 2, and 3) are available to store operating states of the power supply. The state storage feature "remembers" the states or values of the following commands:

CURR, CURR:STEP, CURR:TRIG, CURR:PROT, CURR:PROT:STAT, DISP, OUTP, OUTP:REL, TRIG:DEL, TRIG:SOUR, VOLT, VOLT:STEP, VOLT:TRIG, VOLT:PROT, VOLT:PROT:STAT, and VOLT:RANG

To recall a stored state, you must use the same memory location used previously to store the state.

**`*RCL {1|2|3}`**

This command recalls a previously stored state. To recall a stored state, you must use the same memory location used previously to store the state.

**NOTE**

`DISP {OFF|ON}` can be stored and recalled in remote interface mode only. Going to local mode automatically sets the display state to ON.

# Calibration Commands

Refer to "Calibration" on page 63 for an overview of the calibration features of the power supply. For more detailed discussion on the calibration procedures, refer to the *Service Guide*.

**NOTE** When you calibrate the power supply, you should not set the OVP to the ON state in order to prevent OVP from tripping.

### CALibration:COUNt?

This command queries the power supply to determine the number of times it has been calibrated. Your power supply was calibrated before it left the factory. When you receive your power supply, read the count to determine its initial value. Since the value increments by one for each calibration point, a complete calibration will increase the value by five counts.

### CALibration:CURRent[:DATA] <numeric value>

This command can only be used after calibration is unsecured and the output state is ON. It enters a current value that you obtained by reading an external meter. You must first select the minimum calibration level (`CAL:CURR:LEV MIN`) for the value being entered. You must then select the middle and maximum calibration levels (`CAL:CURR:LEV MID` and `CAL:CURR:LEV MAX`) for the value being entered. Three successive values must be selected and entered. The power supply then computes new calibration constants. These constants are then stored in non-volatile memory.

### CALibration:CURRent:LEVel {MINimum|MIDdle|MAXimum}

This command can only be used after calibration is unsecured and the output state is ON. It sets the power supply to a calibration point that is entered with the `CAL:CURR` command. During calibration, three points must be entered and the low-end point (`MIN`) must be selected and entered first.

### CALibration:CURRent:PROTection

This command calibrates the overcurrent protection circuit of the power supply. It takes about seven seconds to execute the command. The calibration must be unsecured and the output shorted before calibrating the overcurrent protection. The power supply automatically performs the calibration and stores the new overcurrent constant in non-volatile memory. Notice that current calibration precedes before sending this command.

### CALibration:DAC:ERRor

This command corrects the differential nonlinearity error of the internal DAC without an external meter. You must send this command before calibrating the voltage. It takes about 30 seconds to execute the command.

### CALibration:SECure:CODE <new code>

This command enters a new security code. To change the security code, first unsecure the power supply using the old security code. Then, enter the new code. The calibration code may contain up to 12 characters over the remote interface but the first character must always be a letter.

### CALibration:SECure:STATe {OFF|ON},<code>

This command unsecures or secures the power supply for calibration. The calibration code may contain up to 12 characters over the remote interface.

### CALibration:SECure:STATe?

Query the secured state for calibration of the power supply. The returned parameter is `0` (OFF) or `1` (ON).

### CALibration:STRing <quoted string>

This command records calibration information about your power supply. For example, you can store such information as the last calibration date, the next calibration due date, or the power supply's serial number. The calibration message may contain up to 40 characters. The power supply should be unsecured before sending a calibration message.

### CALibration:STRing?

This command queries the calibration message and returns a quoted string.

### CALibration:VOLTage[:DATA] <numeric value>

This command can only be used after calibration is unsecured and the output state is ON. It enters a voltage value that you obtained by reading an external meter. You must first select the minimum calibration level (`CAL:VOLT:LEV MIN`) for the value being entered. You must then select the middle and maximum calibration levels (`CAL:VOLT:LEV MID` and `CAL:VOLT:LEV MAX`) for the value being entered. Three successive values must be selected and entered. The power supply then computes new voltage calibration constants. These constants are then stored in non-volatile memory.

### CALibration:VOLTage:LEVel {MINimum|MIDdle|MAXimum}

This command can only be used after calibration is unsecured and the output state is ON. It sets the power supply to a calibration point that is entered with the `CAL:VOLT` command. During calibration, three points must be entered and the low-end point (MIN) must be selected and entered first.

### CALibration:VOLTage:PROTection

This command calibrates the overvoltage protection circuit of the power supply. It takes about seven seconds to execute the command. The calibration must be unsecured and the output be opened before calibrating the overvoltage protection circuit. The power supply automatically performs the calibration and stores the new overvoltage constant in non-volatile memory. Notice that voltage calibration precedes before sending this command.

# RS-232 Interface Commands

Use the front-panel **I/O Config** key to select the baud rate, parity, and the number of data bits (see "Remote Interface Configuration" on page 51).

### SYSTem:LOCal

This command places the power supply in the local mode during RS-232 operation. All keys on the front panel are fully functional.

### SYSTem:REMote

This command places the power supply in the remote mode for RS-232 operation. All keys on the front panel, except the **Local** key, are disabled.

**NOTE** It is very important that you send the `SYST:REM` command to place the power supply in the remote mode. Sending or receiving data over the RS-232 interface when not configured for remote operation can cause unpredictable results.

### SYSTem:RWLock

This command places the power supply in the remote mode for RS-232 operation. This command is the same as the SYST:REM command except that all keys on the front panel are disabled, including the **Local** key.

### Ctrl-C

This command clears the operation in progress over the RS-232 interface and discards any pending output data. This is equivalent to the IEEE-488 device clear action over the GPIB interface.

# SCPI Status Registers

All SCPI instruments implement status registers in the same way. The status system records various instrument conditions in three register groups: the Status Byte register, the Standard Event register, and the Questionable Status register groups. The Status Byte register records high-level summary information reported in the other register groups. The diagram on the subsequent pages illustrates the SCPI status system used by the power supply.

## What is an event register?

An event register is a read-only register that reports defined conditions within the power supply. Bits in an event register are latched. Once an event bit is set, subsequent state changes are ignored. Bits in an event register are automatically cleared by a query of that register (such as `*ESR?` or `STAT:QUES:EVEN?`) or by sending the `*CLS` (clear status) command. A reset (`*RST`) or device clear will not clear bits in event registers. Querying an event register returns a decimal value which corresponds to the binary-weighted sum of all bits set in the register.

## What is an enable register?

An enable register defines which bits in the corresponding event register are logically ORed together to form a single summary bit. Enable registers are both readable and writable. Querying an enable register will not clear it. The `*CLS` (clear status) command does not clear enable registers but it does clear the bits in the event registers. To enable bits in an enable register, you must write a decimal value which corresponds to the binary-weighted sum of the bits you wish to enable in the register.

# SCPI status system

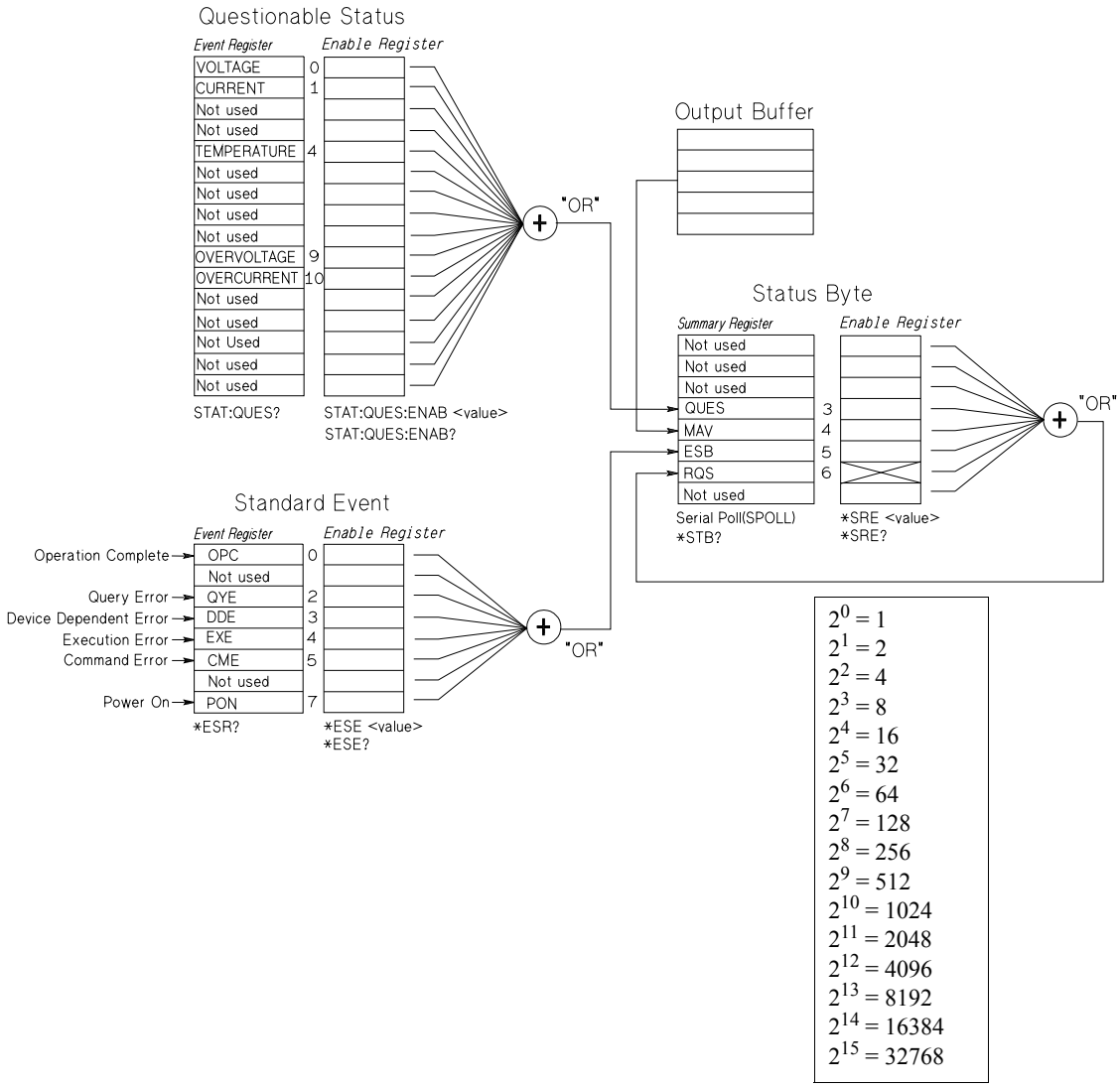


**Figure 3-1** SCPI status system

## The Questionable Status register

The Questionable Status register provides information about voltage and current regulation. Bit 0 is set when the voltage becomes unregulated, and bit 1 is set if the current becomes unregulated. For example if the power supply momentarily goes to the constant current mode when the power supply is operating as a voltage source (constant voltage mode), bit 0 is set to indicate that the voltage output is not regulated.

The Questionable Status register also provides information that the power supply has an overtemperature condition and that the overvoltage and overcurrent protection circuits have tripped. Bit 4 reports an overtemperature condition of the fan, bit 9 reports that the overvoltage protection circuit has tripped, and bit 10 reports that the overcurrent protection circuit has tripped. To read the register, send `STATus:QUEStionable?`.

**Table 3-4** Bit definitions — Questionable Status register

| Bit | | Decimal value | Definition |
|---|---|---|---|
| 0 | Voltage | 1 | The power supply is/was in the constant current mode. |
| 1 | Current | 2 | The power supply is/was in the constant voltage mode. |
| 2–3 | Not used | 0 | Always set to 0. |
| 4 | Over temperature | 16 | The fan has a fault condition. |
| 5–8 | Not used | 0 | Always set to 0. |
| 9 | Over voltage | 512 | The overvoltage protection circuit has tripped. |
| 10 | Over current | 1024 | The overcurrent protection circuit has tripped. |
| 11–15 | Not used | 0 | Always set to 0. |

The Questionable Status event register is cleared when:

- you execute the `*CLS` (clear status) command.
- you query the event register using `STAT:QUES?` (status questionable event register) command.

For example, 16 is returned when you have queried the status of the questionable event register, the temperature condition is questionable.

The Questionable Status Enable register is cleared when you execute the `STAT:QUES:ENAB 0` command.

## The Standard Event register

The Standard Event register reports the following types of instrument events: power-on detected, command syntax errors, command execution errors, self-test or calibration errors, query errors, or when an `*OPC` command is executed. Any or all of these conditions can be reported in the Standard Event summary bit (ESB, bit 5) of the Status Byte register through the enable register. To set the enable register mask, you write a decimal value to the register using the `*ESE` (Event Status Enable) command.

**NOTE** An error condition (Standard Event register bit 2, 3, 4, or 5) will always record one or more errors in the power supply's error queue. Read the error queue using the `SYST:ERR?` command.

**Table 3-5** Bit definitions — Standard Event register

| Bit | | Decimal value | Definition |
|---|---|---|---|
| 0 | OPC | 1 | Operation complete. All commands prior to and including an `*OPC` command have been executed. |
| 1 | Not Used | 0 | Always set to 0. |
| 2 | QYE | 4 | Query Error. The power supply tried to read the output buffer but it was empty. Or, a new command line was received before a previous query had been read. Or, both the input and output buffers are full. |
| 3 | DDE | 8 | Device Error. A self-test or calibration error occurred (refer to error messages 601 to 755 in "Self-Test Error Messages" on page 135 and "Calibration Error Messages" on page 137). |

**Table 3-5** Bit definitions — Standard Event register (continued)

| Bit | | Decimal value | Definition |
|---|---|---|---|
| 4 | EXE | 16 | Execution Error. An execution error occurred (refer to error messages -211 to -223 in "Execution Error Messages" on page 130). |
| 5 | CME | 32 | Command Error. A command syntax error occurred (refer to error messages -104 to -178 in "Execution Error Messages" on page 130). |
| 6 | Not Used | 0 | Always set to 0. |
| 7 | PON | 128 | Power On. Power has been turned off and on since the last time the event register was read or cleared. |

The Standard Event register is cleared when:

- you execute the `*CLS` (clear status) command.
- you query the event register using the `*ESR?` (Event Status register) command.

  For example, `28` (4 + 8 + 16) is returned when you have queried the status of the Standard Event register, QYE, DDE, and EXE conditions have occurred.

The Standard Event Enable register is cleared when:

- you execute the `*ESE 0` command.
- you turn on the power and have previously configured the power supply using the `*PSC 1` command.

The enable register will not be cleared at power-on if you have previously configured the power supply using the `*PSC 0` command.

## The Status Byte register

The Status Byte summary register reports conditions from the other status registers. Query data that is waiting in the power supply's output buffer is immediately reported through the "Message Available" bit (bit 4) of the Status Byte register. Bits in the summary register are not latched. Clearing an event register will clear the corresponding bits in the Status Byte summary register. Reading all messages in the output buffer, including any pending queries, will clear the message available bit.

**Table 3-6** Bit definitions — Status Byte summary register

| Bit | | Decimal value | Definition |
|---|---|---|---|
| 0–2 | Not Used | 0 | Always set to 0. |
| 3 | QUES | 8 | One or more bits are set in the Questionable Status register (bits must be enabled in the enable register). |
| 4 | MAV | 16 | Data is available in the power supply output buffer. |
| 5 | ESB | 32 | One or more bits are set in the Standard Event register (bits must be enabled in the enable register). |
| 6 | RQS | 64 | The power supply is requesting service (serial poll). |
| 7 | Not Used | 0 | Always set to 0. |

The Status Byte summary register is cleared when you execute the `*CLS` (clear status) command.

Querying the Standard Event register (`*ESR?` command) will clear only bit 5 in the Status Byte summary register.

For example, `24` (8 + 16) is returned when you have queried the status of the Status Byte register, QUES and MAV conditions have occurred.

The Status Byte Enable register (request service) is cleared when:

- you execute the `*SRE 0` command.
- you turn on the power and have previously configured the power supply using the `*PSC 1` command.

The enable register will not be cleared at power-on if you have previously configured the power supply using `*PSC 0`.

## Using Service Request (SRQ) and Serial POLL

You must configure your bus controller to respond to the IEEE-488 service request (SRQ) interrupt to use this capability. Use the Status Byte Enable register (`*SRE` command) to select which summary bits will set the low-level IEEE-488 service request signal. When bit 6 (request service) is set in the Status Byte, an IEEE-488 service request interrupt message is automatically sent to the bus controller. The bus controller may then poll the instruments on the bus to identify which one requested service (the instrument with bit 6 set in its Status Byte).

**NOTE** The request service bit is cleared only by reading the Status Byte using an IEEE-488 serial poll or by reading the event register whose summary bit is causing the service request.

To read the Status Byte summary register, send the IEEE-488 serial poll message. Querying the summary register will return a decimal value which corresponds to the binary-weighted sum of the bits set in the register. Serial poll will automatically clear the request service bit in the Status Byte summary register. No other bits are affected. Performing a serial poll will not affect instrument throughput.

**CAUTION** The IEEE-488 standard does not ensure synchronization between your bus controller program and the instrument. Use the `*OPC?` command to guarantee that commands previously sent to the instrument have completed. Executing a serial poll before a `*RST`, `*CLS` or other commands have completed can cause previous conditions to be reported.

## Using *STB? to read the Status Byte

The `*STB?` (Status Byte query) command is similar to a serial poll but it is processed like any other instrument commands. The `*STB?` command returns the same result as a serial poll but the request service bit (bit 6) is not cleared.

The `*STB?` command is not handled automatically by the IEEE-488 bus interface hardware and will be executed only after previous commands have completed. Polling is not possible using the `*STB?` command. Executing the `*STB?` command does not clear the Status Byte summary register.

## Using the Message Available Bit (MAV)

You can use the Status Byte “Message Available” bit (bit 4) to determine when data is available to read into your bus controller. The power supply subsequently clears bit 4 only after all messages have been read from the output buffer.

## To interrupt your bus controller using SRQ

1. Send a device clear message to clear the power supply's output buffer (for example, `CLEAR 705`).
2. Clear the event registers with the `*CLS` (clear status) command.
3. Set up the enable register masks. Execute the `*ESE` command to set up the Standard Event register and the `*SRE` command for the Status Byte.
4. Send the `*OPC?` (operation complete query) command and enter the result to ensure synchronization.
5. Enable your bus controller's IEEE-488 SRQ interrupt.

## To determine when a command sequence is completed

1. Send a device clear message to clear the power supply's output buffer (for example, `CLEAR 705`).
2. Clear the event registers with the `*CLS` (clear status) command.
3. Enable the "Operation Complete" bit (bit 0) in the Standard Event register by executing the `*ESE 1` command.
4. Send the `*OPC?` (operation complete query) command and enter the result to ensure synchronization.
5. Execute your command string to program the desired configuration, and then execute the `*OPC` (operation complete) command as the last command. When the command sequence is completed, the "Operation Complete" bit (bit 0) is set in the Standard Event register.
6. Use a serial poll to check when bit 5 (Standard Event) is set in the Status Byte summary register. You could also configure the power supply for an SRQ interrupt by sending `*SRE 32` (Status Byte Enable register, bit 5).

## Using *OPC to signal when data is in the output buffer

Generally, it is best to use the “Operation Complete” bit (bit 0) in the Standard Event register to signal when a command sequence is completed. This bit is set in the register after an `*OPC` command has been executed. If you send `*OPC` after a command which loads a message in the power supply’s output buffer (query data), you can use the “Operation Complete” bit to determine when the message is available. However, if too many messages are generated before the `*OPC` command executes (sequentially), the output buffer will overload and the power supply will stop processing commands.

# Status Reporting Commands

**NOTE** Refer to "SCPI status system" on page 108 for detailed information of the status register structure of the power supply.

### SYSTem:ERRor?

This query command reads one error from the error queue. When the front-panel **ERROR** annunciator turns on, one or more command syntax or hardware errors have been detected. A record of up to 20 errors can be stored in the power supply's error queue. Refer to Chapter 4, "Error Messages" for more details.

- Errors are retrieved in the first-in-first-out (FIFO) order. The first error returned is the first error that was stored. When you have read all errors from the queue, the **ERROR** annunciator turns off. The power supply beeps once each time an error is generated.
- If more than 20 errors have occurred, the last error stored in the queue (the most recent error) is replaced with -350, "Queue overflow". No additional errors are stored until you remove errors from the queue. If no errors have occurred when you read the error queue, the power supply responds with +0, "No error".
- The error queue is cleared when power has been off or after a `*CLS` (clear status) command has been executed. The `*RST` (reset) command does not clear the error queue.

### STATus:QUEStionable:CONDition?

This command queries the Questionable Status condition register to check CV or CC mode of the power supply. The power supply returns a decimal value which corresponds to the binary-weighted sum of all bits in the register. These bits are not latched. If 0 is returned, the power supply is in output off or unregulated state. If 1 is returned, the power supply is in the CC operating mode and if 2 is returned, the power supply is in the CV operating mode. If 3 is returned, the power supply is in failure.

### STATus:QUEStionable?

This command queries the Questionable Status event register. The power supply returns a decimal value which corresponds to the binary-weighted sum of all bits in the register. These bits are latched. Reading the event register clears it.

### STATus:QUEStionable:ENABle <enable value>

This command enables bits in the Questionable Status Enable register. The selected bits are then reported to the Status Byte.

### STATus:QUEStionable:ENABle?

This command queries the Questionable Status Enable register. The power supply returns a binary-weighted decimal representing the bits set in the enable register.

### *CLS

This command clears all event registers and Status Byte register.

### *ESE <enable value>

This command enables bits in the Standard Event Enable register. The selected bits are then reported to the Status Byte.

### *ESE?

This command queries the Standard Event Enable register. The power supply returns a decimal value which corresponds to the binary-weighted sum of all bits in the register.

### *ESR?

This command queries the Standard Event register. The power supply returns a decimal value which corresponds to the binary-weighted sum of all bits in the register.

### *OPC

This command sets the “Operation Complete” bit (bit 0) of the Standard Event register after the command is executed.

### *OPC?

This command returns `1` to the output buffer after the command is executed.

### *PSC {0|1}

(Power-on status clear.) This command clears the Status Byte and the Standard Event register enable masks when power is turned on (`*PSC 1`). When `*PSC 0` is in effect, the Status Byte and Standard Event register enable masks are not cleared when power is turned on.

### *PSC?

This command queries the power-on status clear setting. The returned parameter is `0` (`*PSC 0`) or `1` (`*PSC 1`).

### *SRE <enable value>

This command enables bits in the Status Byte Enable register.

### *SRE?

This command queries the Status Byte Enable register. The power supply returns a decimal value which corresponds to the binary-weighted sum of all bits set in the enable register.

### *STB?

This command queries the Status Byte summary register. The `*STB?` command is similar to a serial poll but it is processed like any other instrument command. The `*STB?` command returns the same result as a serial poll but the **Request Service** bit (bit 6) is not cleared if a serial poll has occurred.

### *WAI

This command instructs the power supply to wait for all pending operations to complete before executing any additional commands over the interface. Used only in the triggered mode.

# Halting an Output in Progress

You can send a device clear at any time to stop an output in progress over the GPIB interface. The status registers, the error queue, and all configuration states are left unchanged when a device clear message is received. Device clear performs the following actions.

- The power supply's input and output buffers are cleared.
- The power supply is prepared to accept a new command string.
- The following statement shows how to send a device clear over the GPIB interface using Agilent BASIC.

  `CLEAR 705` *IEEE- 488 device clear*

- The following statement shows how to send a device clear over the GPIB interface using the GPIB Command Library for C or QuickBASIC.

  `IOCLEAR (705)`

**NOTE** For RS-232 operation, sending the `<Ctrl-C>` character will perform the same operation as the IEEE-488 device clear message. The power supply's DTR (data terminal ready) handshake line is set true following a device clear message. Refer to "DTR/DSR handshake protocol" on page 60 for more information.

**NOTE** All remote interface configurations can be entered only from the front panel. Refer to "Storing and Recalling Operating States" on page 33 to configure for GPIB or RS-232 interface before operating the power supply remotely.

# SCPI Conformance Information

The power supply conforms to the 1995.0 version of the SCPI standard. Many of the commands required by the standard are accepted by the power supply but are not described in this manual for simplicity or clarity. Most of these non-documented commands duplicate the functionality of a command already described in this manual.

## SCPI confirmed commands

Table 3-7 lists the SCPI-confirmed commands that are used by the power supply.

**Table 3-7** SCPI confirmed commands

```
DISPlay
    [:WINDow][:STATe] {OFF|ON}
    [:WINDow][:STATe]?
    [:WINDow]:TEXT[:DATA] <quoted string>
    [:WINDow]:TEXT[:DATA]?
    [:WINDow]:TEXT:CLEar
INITiate[:IMMediate]
MEASure
    :CURRent[:DC]?
    [:VOLTage][:DC]?
OUTPut
    [:STATe] {OFF|ON}
    [:STATE]?
```

**Table 3-7** SCPI confirmed commands (continued)

```
[SOURce]
   :CURRent[:LEVel][:IMMediate][:AMPLitude] {<current>|MIN|MAX|UP|DOWN}
   :CURRent[:LEVel][:IMMediate][:AMPLitude]? [MIN|MAX]
   :CURRent[:LEVel][:IMMediate]:STEP[:INCRement] {<numeric value>|DEFault}
   :CURRent[:LEVel][:IMMediate]:STEP[:INCRement]? {DEFault}
   :CURRent[:LEVel]:TRIGgered[:AMPLitude] {<current>|MIN|MAX}
   :CURRent[:LEVel]:TRIGgered[:AMPLitude]?[MIN|MAX]
   :CURRent:PROTection[:LEVel] {<current>|MIN|MAX}
   :CURRent:PROTection[:LEVel]? {MIN|MAX}
   :CURRent:PROTection:STATe {0|1|OFF|ON}
   :CURRent:PROTection:STATe?
   :CURRent:PROTection:TRIPped?
   :CURRent:PROTection:CLEar
[SOURce]
   :VOLTage[:LEVel][:IMMediate][:AMPLitude] {<voltage>|MIN|MAX|UP|DOWN}
   :VOLTage[:LEVel][:IMMediate][:AMPLitude]?[MIN|MAX]
   :VOLTage[:LEVel][:IMMediate]:STEP[:INCRement] {<numeric value>|DEFault}
   :VOLTage[:LEVel][:IMMediate]:STEP[:INCRement]? {DEFault}
   :VOLTage[:LEVel]:TRIGgered[:AMPLitude] {<voltage>|MIN|MAX}
   :VOLTage[:LEVel]:TRIGgered[:AMPLitude]?[MIN|MAX]
   :VOLTage:PROTection[:LEVel] {<voltage>|MIN|MAX}
   :VOLTage:PROTection[:LEVel]? {MIN|MAX}
   :VOLTage:PROTection:STATe {0|1|OFF|ON}
   :VOLTage:PROTection:STATe?
   :VOLTage:PROTection:TRIPped?
   :VOLTage:PROTection:CLEar
   :VOLTage:RANGe {P15V|P30V|LOW|HIGH}
   :VOLTage:RANGe?
STATus
   :QUEStionable:CONDition?
   :QUEStionable[:EVENt]?
   :QUEStionable:ENABle <enable value>
   :QUEStionable:ENABle?
SYSTem
   :BEEPer[:IMMediate]
   :ERRor?
   :VERSion
TRIGger
   [:SEQuence]:DELay {<seconds>|MIN|MAX}
   [:SEQuence]:DELay?
   [:SEQuence]:SOURce{BUS|IMM}
   [:SEQuence]:SOURce?
```

## Device-specific commands

The following commands are device-specific to your power supply. They are not included in the 1995.0 version of the SCPI standard. However, these commands are designed with the SCPI standard in mind, and they follow all of the command syntax rules defined by the standard.

**Table 3-8** Non-SCPI commands

```
APPLy {<voltage>|DEF|MIN|MAX>}[,{<current>|DEF|MIN|MAX}]
APPLy?
CALibration
   :COUNt?
   :CURRent[:DATA] <numeric value>
   :CURRent:LEVel {MIN|MID|MAX}
   :CURRent:PROTection
   :DAC:ERRor
   :SECure:CODE <new code>
   :SECure:STATe {OFF|ON},<code>
   :SECure:STATe?
   :STRing <quoted string>
   :STRing?
   :VOLTage[:DATA] <numeric value>
   :VOLTage:LEVel {MIN|MID|MAX}
   :VOLTage:PROTection
OUTPut
   :RELay[:STATe] {OFF|ON}
   :RELay[:STATE]?
SYSTem
   :LOCal
   :REMote
   :RWLock
```

# IEEE-488 Conformance Information

## Dedicated hardware lines

| | |
|---|---|
| ATN | *Attention* |
| IFC | *Interface Clear* |
| REN | *Remote Enable* |
| SRQ | *Service Request Enable* |

## Addressed commands

| | |
|---|---|
| DCL | *Device Clear* |
| EOI | *End or Identify* |
| GET | *Group Execute Trigger* |
| GTL | *Go to Local* |
| LLO | *Local Lockout* |
| SDC | *Selected Device Clear* |
| SPD | *Serial Poll Disable* |
| SPE | *Serial Poll Enable* |

## IEEE-488.2 common commands

```
*CLS
*ESE <enable value>
*ESE?
*ESR?
*IDN?
*OPC
*OPC?
*PSC {0|1}
*PSC?
*RST
*SAV {1|2|3|4|5}
*RCL {1|2|3|4|5}
*SRE <enable value>
*SRE?
*STB?
*TRG
*TST?
*WAI
```

# 4
# Error Messages

Overview 128
Execution Error Messages 130
Self-Test Error Messages 135
Calibration Error Messages 137

This chapter lists the error messages that may appear as you are working with the power supply.

# Overview

When the front-panel **ERROR** annunciator turns on, one or more command syntax or hardware errors have been detected. A record of up to 20 errors is stored in the power supply's error queue. The power supply beeps once each time an error is generated.

- Errors are retrieved in first-in-first-out (FIFO) order. The first error returned is the first error that was stored. When you have read all errors from the queue, the **ERROR** annunciator turns off.
- If more than 20 errors have occurred, the last error stored in the queue (the most recent error) is replaced with -350, "Queue overflow". No additional errors are stored until you remove errors from the queue. If no erros have occurred when you read the error queue, the supply responds with +0, "No error" over the remote interface or "NO ERRORS" from the front panel.
- The error queue is cleared when power has been off or after a `*CLS` (clear status) command has been executed. The `*RST` (reset command) command does not clear the error queue.

## Front panel operation

If the **ERROR** annunciator is on, press [Error] repeatedly to read the errors stored in the queue. The error queue is cleared when you read all errors.

```
ERROR -113
```

## Remote interface operation

`SYSTem:ERRor?` *Reads one error from the error queue.*

Errors have the following format (the error string may contain up to 80 characters).

```
-113, "Undefined header"
```

# Execution Error Messages

**Table 4-1** Execution error messages

| | |
|---|---|
| -101 | Invalid character<br>An invalid character was found in the command string. You may have inserted a character such as #, $, or % in the command keyword or within a parameter.<br>Example: `OUTP:STAT #ON` |
| -102 | Syntax error<br>Invalid syntax was found in the command string. You may have inserted a blank space before or after a colon in the command header, or before a comma.<br>Example: `VOLT:LEV, 1` |
| -103 | Invalid separator<br>An invalid separator was found in the command string. You may have used a comma instead of a colon, semicolon, or blank space, or you may have used a blank space instead of a comma.<br>Example: `TRIG:SOUR,BUS` or `APPL 1.0 1.0` |
| -104 | Data type error<br>The wrong parameter type was found in the command string. You may have specified a number where a string was expected, or vice versa. |
| -105 | GET not allowed<br>A Group Execute Trigger (GET) is not allowed within a command string. |
| -108 | Parameter not allowed<br>More parameters were received than expected for the command. You may have entered an extra parameter, or added a parameter to a command that does not accept a parameter.<br>Example: `APPL? 10` |
| -109 | Missing parameter<br>Fewer parameters were received than expected for the command. You omitted one or more parameters that are required for this command.<br>Example: `APPL` |
| -112 | Program mnemonic too long<br>A command header was received which contained more than the maximum 12 characters allowed. |

**Table 4-1** Execution error messages (continued)

| | |
|---|---|
| -113 | Undefined header<br>A command was received that is not valid for this power supply. You may have misspelled the command or it may not be a valid command. If you are using the short form of the command, remember that it may contain up to four letters.<br>Example: `TRIGG:DEL 3` |
| -114[1] | Header suffix out of range<br>The numeric suffix attached to a command header is not one of the allowable values.<br>Example: `OUTP2 ON` |
| -120[1] | Numeric data error<br>An invalid number was specified for a numeric parameter.<br>Example: `APPL 1.0E+320000` |
| -121 | Invalid character in number<br>An invalid character was found in the number specified for a parameter value.<br>Example: `*ESE #B01010102` |
| -123 | Numeric overflow<br>A numeric parameter was found whose exponent was larger than 32000. |
| -124 | Too many digits<br>A numeric parameter was found whose mantissa contained more than 255 digits, excluding leading zeros. |
| -128 | Numeric data not allowed<br>A numeric parameter was received but a character string was expected.<br>Example: `DISP:TEXT 123` |
| -130[1] | Suffix error<br>A suffix was incorrectly specified for a numeric parameter. You may have misspelled the suffix or the numeric parameter does not accept a suffix.<br>Example: `TRIG:DEL 0.5 SECS` |
| -131 | Invalid suffix<br>A suffix was incorrectly specified for a numeric parameter. You may have misspelled the suffix.<br>Example: `TRIG:DEL 0.5 SECS` |
| -134 | Suffix too long<br>A suffix for a numeric parameter contained too many characters. |

**Table 4-1** Execution error messages (continued)

| | |
|---|---|
| -138 | Suffix not allowed<br>A suffix was received following a numeric parameter which does not accept a suffix.<br>Example: `STAT:QUES:ENAB 18 SEC` (`SEC` is not a valid suffix.) |
| -141 | Invalid character data<br>Either the character data element contained an invalid character or the particular element received was not valid for the header. |
| -144 | Character data too long<br>The character data element contained too many characters. |
| -148 | Character data not allowed<br>A discrete parameter was received but a character string or a numeric parameter was expected. Check the list of parameters to verify that you have used a valid parameter type.<br>Example: `DISP:TEXT ON` |
| -151 | Invalid string data<br>An invalid character string was received. Check to see if you have enclosed the character string in single or double quotes.<br>Example: `DISP:TEXT 'ON` |
| -158 | String data not allowed<br>A character string was received but is not allowed for the command. Check the list of parameters to verify that you have used a valid parameter type.<br>Example: `TRIG:DEL 'zero'` |
| -160 to -168 | Block data errors<br>The power supply does not accept block data. |
| -170 to -178 | Expression errors<br>The power supply does not accept mathematical expressions. |
| -211 | Trigger ignored<br>A Group Execute Trigger (GET) or `*TRG` was received but the trigger was ignored. The trigger source should be selected to the bus and the trigger subsystem should be initiated by the `INIT[:IMM]` command. |
| -213 | Init ignored<br>An `INITiate` command was received but could not be executed because a measurement was already in progress. Send a device clear to halt a measurement in progress and place the power supply in the "idle" state. |

**Table 4-1** Execution error messages (continued)

| | |
|---|---|
| -221 | Settings conflict<br>Indicates that a legal program data element was parsed but could not be executed due to the current device state. |
| -222 | Data out of range<br>A numeric parameter value is outside the valid range for the command.<br>Example: `TRIG:DEL -3` |
| -223 | Too much data<br>A character string was received but could not be executed because the string length was more than 40 characters. This error can be generated by the `CALibration:STRing` command. |
| -224 | Illegal parameter value<br>A discrete parameter was received which was not a valid choice for the command. You may have used an invalid parameter choice.<br>Example: `DISP:STAT XYZ` (`XYZ` is not a valid choice.) |
| -330 | Self-test failed<br>The power supply's complete self-test failed from the remote interface (`*TST?` command). In addition to this error, more specific self-test errors are also reported. See also "Self-Test Error Messages" on page 135. |
| -350 | Queue overflow<br>The error queue is full because more than 20 errors have occurred. No additional errors are stored until you remove errors from the queue. The error queue is cleared when power has been turned off, or after a `*CLS` (clear status) command has been executed. |
| -410 | Query INTERRUPTED<br>A command was received which sends data to the output buffer, but the output buffer contained data from a previous command (the previous data is not overwritten). The output buffer is cleared when power has been turned off, or after a `*RST` (reset) command has been executed. |
| -420 | Query UNTERMINATED<br>The power supply was addressed to talk (i.e., to send data over the interface) but a command has not been received which sends data to the output buffer. For example, you may have executed an `APPLy` command (which does not generate data) and then attempted an ENTER statement to read data from the remote interface. |
| -430 | Query DEADLOCKED<br>A command was received which generates too much data to fit in the output buffer and the input buffer is also full. Command execution continues but all data is lost. |

**Table 4-1** Execution error messages (continued)

| | |
|---|---|
| -440 | Query UNTERMINATED after indefinite response<br>The `*IDN?` command must be the last query command within a command string.<br>Example: `*IDN?;:SYST:VERS?` |
| 501 | Isolator UART framing error |
| 502 | Isolator UART overrun error |
| 503[1] | SPI data error<br>Data error was detected during the communication between the main controller U10 and the I/O controller U752. |
| 511 | RS-232 framing error |
| 512 | RS-232 overrun error |
| 513 | RS-232 parity error |
| 514 | Command allowed only with RS-232<br>There are three commands which are only allowed with the RS-232 interface: `SYSTem:LOCal`, `SYSTem:REMote`, and `SYSTem:RWLock`. |
| 521 | Input buffer overflow |
| 522 | Output buffer overflow |
| 550 | Command not allowed in local<br>You should always execute the `SYSTem:REMote` command before sending other commands over the RS-232 interface. |

[1] This error message is only applicable for serial MY53xx6xxx.

# Self-Test Error Messages

The following errors indicate failures that may occur during a self-test. Refer to the *Service Guide* for more information.

**Table 4-2** Self-test error messages

| | |
|---|---|
| 601 | Front panel does not respond<br>The main controller U17 (*U10 for serial MY53xx6xxx*) attempts to establish serial communications with the front panel controller U7 (*U602 for serial MY53xx6xxx*) on the front panel board. During this test, the U7 (*U602 for serial MY53xx6xxx*) turns on all display segments. Communication must function in both directions for this test to pass. If this error is detected during power-on self-test, the power supply will beep twice. This error is only readable from the remote interface. |
| 602 | RAM read/write failed<br>This test writes and reads a 55h and AAh checker board pattern to each address of RAM U14. Any incorrect readback will cause a test failure. This error is only readable from the remote interface. |
| 603 | A/D sync stuck<br>The main controller issues an A/D sync pulse to U17 and U18 to latch the value in the ADC slope counters. A failure is detected when a sync interrupt is not recognized and subsequent time-out occurs. |
| 604 | A/D slope convergence failed<br>The input amplifier is configured to the measure zero (MZ) state in the 10 V range. This test checks whether the ADC integrator produces nominally the same number of positive and negative slope decisions (±10%) during a 20 ms interval. |
| 605 | Cannot calibrate rundown gain<br>This test checks the nominal gain between integrating ADC and the U17 on-chip ADC. This error is reported if the procedure can not run to completion due to a hardware failure. |
| 606 | Rundown gain out of range<br>This test checks the nominal gain between the integrating ADC and the U17 on-chip ADC. The nominal gain is checked to ±10% tolerance. |
| 607 | Rundown too noisy<br>This test checks the gain repeatability between the integrating ADC and the U17 on-chip ADC. The gain test (606) is performed eight times. Gain noise must be less than ±64 LSB of the U17 on-chip ADC. |
| 608 | Serial configuration readback failed<br>This test re-sends the last 3 bytes of serial configuration data to all the serial paths (SERDAT, SERBCK, SERCLK). The data is then clocked back into U18 and compared against the original 3 bytes sent. A failure occurs if the data do not match. This tests checks the serial data path through U22. |

**Table 4-2** Self-test error messages (continued)

| | |
|---|---|
| 609[1] | This test checks if the ADC hardware is functional. The main controller U10 establishes communication with the ADC and checks if there are any error bits set for the ADC's status reporting. |
| 624 | Unable to sense line frequency<br>This test checks that the LSENSE logic input U17 is toggling. If no logic input is detected, the power supply will assume a 50 Hz line operation for all future measurements. |
| 625 | I/O processor does not respond<br>This test checks that communications can be established between U17 (*U10 for serial MY53xx6xxx*) and U4 (*U752 for serial MY53xx6xxx*) through the isolated (U6 and U7) (*U751 for serial MY53xx6xxx*) serial data link. Failure to establish communication in either direction will generate an error. If this condition is detected at power-on self-test, the power supply will beep and the error annunciator will be turned on. |
| 626 | I/O processor failed self-test<br>This test causes the earth referenced processor U4 (*U752 for serial MY53xx6xxx*) to execute an internal ram test. Failure will generate an error. |
| 630 | Fan test failed<br>This test checks if the fan current is flowing. If the current is not detected at power-on self-test, the power supply will beep and the error annunciator will be turned on. Fan test failure could likely induce overtemperature condition in the power supply. |
| 631 | System DAC test failed<br>This test checks if the DAC hardware is functional. The main controller U17 (*U10 for serial MY53xx6xxx*) sends a reference voltage data to DAC and converts the DAC output to digital data to see if the digital data is within a valid range. |
| 632 | Hardware test failed<br>This test checks the status of voltage and current error amplifiers for the power circuit of output1. If both amplifiers are not operational, the power supply will beep and the error annunciator will be turned on. |

[1] This error message is only applicable for serial MY53xx6xxx.

# Calibration Error Messages

The following errors indicate failures that may occur during a calibration. Refer to the *Service Guide* for more information.

**Table 4-3** Calibration error messages

| | |
|---|---|
| 701 | Cal security disabled by jumper<br>The calibration security feature has been disabled with a jumper inside the power supply. When applicable, this error will occur at power-on to warn you that the power supply is unsecured. |
| 702 | Cal secured<br>The power supply is secured against calibration. |
| 703 | Invalid secure code<br>An invalid calibration security code was received when attempting to unsecure or secure the power supply. You must use the same security code to unsecure the power supply as was used to secure it, and vice versa. The security code may contain up to 12 alphanumeric characters. The first character must be a letter. |
| 704 | Secure code too long<br>A security code was received which contained more than 12 characters. |
| 705 | Cal aborted<br>A calibration in progress is aborted when you press any front-panel key, send a device clear, or change the local/remote state of the instrument. |
| 708 | Cal output disabled<br>Calibration is aborted by sending the `OUTP OFF` command during an output calibration. |
| 712 | Bad DAC cal data<br>The specified DAC calibration values (`CAL:VOLT` or `CAL:CURR`) are out of range. Note that the new calibration constants are not stored in the non-volatile memory. |
| 713 | Bad readback cal data<br>The specified readback calibration values (`CAL:VOLT` or `CAL:CURR`) are out of range. Note that the new calibration constants are not stored in the non-volatile memory. |
| 714 | Bad OVP cal data<br>The overvoltage protection calibration constant is out of range. Note that the new calibration constants are not stored in the non-volatile memory. |

**Table 4-3** Calibration error messages (continued)

| | |
|---|---|
| 715 | Bad OCP cal data<br>The overcurrent protection calibration constant is out of range. Note that the new calibration constants are not stored in the non-volatile memory. |
| 716 | Bad DAC DNL error correction data<br>Invalid data measured during the calibration for DAC differential nonlinearity error correction. |
| 717 | Cal OVP or OCP status enabled<br>Overvoltage protection status or overcurrent protection status is enabled. You must set both overvoltage and overcurrent protection status to OFF before and during the calibration. |
| 740 | Cal checksum failed, secure state |
| 741 | Cal checksum failed, string data |
| 742 | Cal checksum failed, store/recall data in location 0 |
| 743 | Cal checksum failed, store/recall data in location 1 |
| 744 | Cal checksum failed, store/recall data in location 2 |
| 745 | Cal checksum failed, store/recall data in location 3 |
| 746 | Cal checksum failed, DAC cal constants |
| 747 | Cal checksum failed, readback cal constants |
| 748 | Cal checksum failed, GPIB address |
| 749 | Cal checksum failed, internal data |
| 750 | Cal checksum failed, DAC DNL error correction data |

# 5
# Application Programs

Overview 140
Example Program for C++ (GPIB IEEE 488) 141
Example Program for Excel 5.0 (Windows 3.1 and GPIB) 144

This chapter contains two application programs that utilize the remote interface.

# Overview

This chapter contains two application programs over the remote interface to help you develop programs for your own application. Chapter 3, “Remote Interface Reference” lists the syntax for the SCPI (Standard Commands for Programmable Instruments) commands available to program the power supply.

All program examples have been tested on a PC with Windows 3.1 or Windows for Workgroups. Both examples are for use with GPIB (IEEE 488). These examples require a VISA (Virtual Instrument Software Architecture) driver with your GPIB PC card. You should have the “visa.dll” in your windows/system directory for the GPIB examples to work. All program examples perform the same task. They step through voltages and make corresponding current readings to characterize a power diode.

# Example Program for C++ (GPIB IEEE 488)

This following C programming example shows sending and receiving formatted I/O. Refer to the *VISA User's Guide* for non-formatted I/O. This example program is intended to show the use of SCPI commands and VISA functionality and does not include error trapping. Error trapping, however, is good programming practice and is recommended in your application. Refer to the *VISA User's Guide* for more information about error trapping.

The example program was written in Microsoft Visual C++ ver 1.52, project type "QuickWin application", using the large memory model. Be sure to move the "visa.lib" and "visa.h" file to the lib and include development directory. These are usually found at `c:\vxipnp\win\lib\msc\` and `c:\vxipnp\win\include`.

## Diode.c

```
/*Diode.C
This example program steps the E3632A DC Power Supply through 10 voltages and measures the
current response. It prints the voltage step and the current response as a table. Note that
the GPIB address is the default address from the factory for the E3632A.*/

#include <visa.h>
#include <stdio.h>
#include <string.h>
#include <time.h>

/* Provides a delay of the specified time wait in milliseconds*/
void delay( clock_t wait );

void main ()
{
  ViSession defaultRM;      /* resource manager id                      */
  ViSession power_supply;   /* session id to an instrument              */
  char reply_string [256];  /* string returned from instrument          */
  char GPIB_address [3];    /* GPIB address of instrument               */
  char Visa_address[40];    /* Complete VISA address send to card       */
  double voltage;           /* value of voltage sent to power supply    */
  double current;           /* value of current output of power supply */
```

```
    /* build the address needed to open communication with GPIB card */
    /* address format looks like this; GPIB0::5::INSTR */
    /*                                                                  */

    strcpy(GPIB_address, "5"); /******  Change GPIB address here *****/
    strcpy(Visa_address, "GPIB0::");
strcat(Visa_address, GPIB_address);

  /* Open communication (session) with power supply */
  viOpenDefaultRM (&defaultRM);
  viOpen (defaultRM, Visa_address, 0,0, &power_supply);

  /* Query the power supply id, read response and print */
  viPrintf (power_supply, "*IDN?\n");
  viScanf (power_supply, "%s", &reply_string);
  printf ("Instrument identification string:\n      %s\n\n", reply_string);

  /* Initialize Power Supply */
  viPrintf (power_supply, "*RST\n");       /* Set power on condition      */
  viPrintf (power_supply, "Current 2\n");  /* Set Current limit to 2A     */
  viPrintf (power_supply, "Output on\n");  /* Turn output on              */

  printf("Voltage  Current\n\n");          /* Print heading               */

  /* Step from 0.6v to 0.8 volt in .02volt steps */
  for(voltage =.6;voltage <<=.8001;voltage +=.02)
    {
    viPrintf (power_supply, "Volt %f\n",voltage);     /*set voltage                 */
    printf("%.3f",voltage);                           /* print power supply setting */
    delay(500);                              /* allow output to settle for 500 msec */
    viPrintf(power_supply,"Measure:Current?\n");      /*measure output current       */
    viScanf (power_supply, "%lf",&current);           /* retrieve reading            */
    printf("     %.3lf\n",current);                   /* print reading               */
    }
```

```
viPrintf (power_supply, "Output Off\n");            /* turn off  output            */

/* Close communication session */
viClose (power_supply);
viClose (defaultRM);
}

/* Pauses for a specified number of milliseconds. */
void delay( clock_t wait )
{
   clock_t goal;
   clock_t delay;
   wait = wait/1000;
   delay = (clock_t)wait * CLOCKS_PER_SEC;
   goal = delay + clock();
   while( goal > clock() );
}
```

## End of program

# Example Program for Excel 5.0 (Windows 3.1 and GPIB)

Excel VB Macros may be used to control your Agilent E3632A. With Excel you can take the value of a cell in a spread sheet, send it to the power supply, and then record the response on the worksheet. The example on the following pages characterizes a component across the Agilent E3632A terminals. This example reads 11 voltages from a worksheet, programs the Agilent E3632A to that voltage, and then reads the current. The value of current is recorded next to the voltage on the spread sheet. The example is for Excel 5.0 in Windows 3.1.

To write macros and control the power supply in Excel first open a module in Excel. From the **Insert** menu choose **Macro** and then **Module**. Name the module created this way `Diode bas` (click the right mouse button on the tab). Create one more module named `GPIB bas`. The module `GPIB bas` will set up all the overhead needed to talk to the GPIB port. This module will subroutines that allow the communication in a simple form. The macro called **Diode** is an example that tests a diode using the other module.

To try the example for characterizing a diode, type in both modules. Once the modules are completed, go to a worksheet. In cell A4 type `Volts`, in cell B4 type `Current`. In cells A5 type `0.6`. Fill in the cells A4 to A15 in 0.02 increments so that cell A15 contains 0.8.

Now while the cursor is still in the worksheet, select **Tools, Macro** from the menu. Double click on the **Diode** macro in the **Macro** dialog box. The power supply will reset to power on condition and then step through the voltages in the worksheet. After each step the current is measured, and recorded in the worksheet.

Make any changes to suit your needs in the **Diode bas** module. Change the GPIB address in the routine **OpenPort( )** contained in the **GPIB bas** module. If there is a system error when trying to run the macro, you may have to reboot the PC for the GPIB port to work.

## Diode bas Macro

```
Option Explicit
'"""""""""""""""""""""""""""""""""""""""""""""""""""""""""""""""""""""""
' This is the subroutine first executed. Modify this routine
' to suit your needs. To change the GPIB address, go to the module GPIB,
' Sub OpenPort(), and change the variable VISAaddr = "5" to the
' required GPIB address
'"""""""""""""""""""""""""""""""""""""""""""""""""""""""""""""""""""""""
Sub Diode()
     Range("B5:B15").ClearContents
     Dim I As Integer
     OpenPort
     SendSCPI "*RST"               'Reset E3632A to power on condition
     SendSCPI "Output ON"          'Turn on the output
     For I = 5 To 15
         ' Convert the worksheet value to a string, add to SCPI command
         SendSCPI "Volt" & Str$(Cells(I, 1))
         ' Request a current measurement, put response in worksheet
         Cells(I, 2) = Val(SendSCPI("meas:current?"))
     Next I
     SendSCPI "Output OFF"        'Turn off the output
     ClosePort
End Sub
```

## GPIB bas Macro

```
Option Explicit
' - Declarations for VISA.DLL, additional declarations are usually in the
' directory c:\vxipnp\win\include in file visa.bas, also see the VISA manual
Declare Function viOpenDefaultRM Lib "VISA.DLL" Alias "#141" (sesn As Long) As Long
Declare Function viOpen Lib "VISA.DLL" Alias "#131" (ByVal sesn As Long, _
   ByVal desc As String, ByVal mode As Long, ByVal TimeOut As Long, vi As Long) As Long
Declare Function viClose Lib "VISA.DLL" Alias "#132" (ByVal vi As Long) As Long
Declare Function viRead Lib "VISA.DLL" Alias "#256" (ByVal vi As Long, _
   ByVal Buffer As String, ByVal Count As Long, retCount As Long) As Long
Declare Function viWrite Lib "VISA.DLL" Alias "#257" (ByVal vi As Long, _
   ByVal Buffer As String, ByVal Count As Long, retCount As Long) As Long

' Error Codes and other global variables
Global Const VI_SUCCESS = &h0&
Global videfaultRM As Long        ' resource manager id for VISA GPIB
Global vi As Long                 ' stores the session for VISA
Dim errorStatus As Long           ' VTL error code
''''''''''''''''''''''''''''''''''''''''''''''''''''''''''''''''''''''''''''''''
' This routine requires the file VISA.dll. It typically resides under
' the directory c:\windows\system. This routine uses the VTL Library to
' send commands to an instrument. A description of these and additional
' VTL commands are contained in the Hewlett Packard Visa Transition
' Library book Agilent PN E2094-90002.
''''''''''''''''''''''''''''''''''''''''''''''''''''''''''''''''''''''''''''''''
Function SendSCPI(SCPICmd As String) As String
' This function will send a SCPI command string to the
' GPIB port. If the command contains a question mark,
' the response is read, and returned.

    Dim readbuf As String * 512   ' buffer used for returned string
    Dim crlfpos As Integer        ' location of CR's and LF's in readbuf
    Dim cmdString As String       ' command passed to instrument
    Dim ReturnString As String    ' string returned from instrument
    Dim actual As Long            ' number of characters send/returned

    'Set up an error handler within this subroutine that will get
    'called if an error occurs.
    On Error GoTo VIerrorHandler
    'Write the command to the instrument terminated by a linefeed.
    cmdstring = SCPICmd & Chr$(10)
    errorStatus = viWrite(vi, ByVal commandstr, Len(commandstr), actual)
```

```
 If InStr(SCPICmd, "?") Then           'If a query read the response string
        errorStatus = viRead(vi, ByVal readbuf, 512, actual)
        ReturnString = readbuf
        'Strip out any nul's from the response string.
        crlfpos = InStr(ReturnString, Chr$(0))
        If crlfpos Then
            ReturnString = Left(ReturnString, crlfpos - 1)
        End If
        SendSCPI = ReturnString           'return the remaining string
    End If                                ' end of query to instrument for a response
Exit Function

VIerrorHandler:
'Display the error message in the txtResponse TextBox
MsgBox " I/O Error: " & Error$()
'Close the device session
errorStatus = viClose(vi)
Exit Function
End Function

Sub OpenPort()
    Dim VISAaddr As String
    '****************************
    'Change the GPIB address here
    '****************************
    VISAaddr = "5"
    errorStatus = viOpenDefaultRM(videfaultRM)   'open the visa session
    'Open communication to instrument
    errorStatus = viOpen(videfaultRM, "GPIB0::" & VISAaddr & "::INSTR",0, 1000, vi)
    If errorStatus < VI_SUCCESS Then             ' on error give message
       Cells(1, 1) = "Unable to Open port"
    End If
End Sub

Sub ClosePort()
    errorStatus = viClose(vi)
   'close the session
    errorStatus = viClose(videfaultRM)
End Sub
```

## End of program

**THIS PAGE HAS BEEN INTENTIONALLY LEFT BLANK.**

# 6
# Tutorial

Overview of the Power Supply Operation 150
Output Characteristics 152
Connecting the Load 157
Extending the Voltage Range and Current Range 162
Remote Programming 164
Reliability 166

This chapter describes the basic operation of a linear power supply and gives specific details on the operation and use of the E3632A DC power supply.

# Overview of the Power Supply Operation

Series regulated power supplies were introduced many years ago and are still used extensively today. The basic design technique, which has not changed over the years, consists of placing a control element in series with the rectifier and load device. Figure 6-1 shows a simplified schematic of a series regulated supply with the series element depicted as a variable resistor. Feedback control circuits continuously monitor the output and adjust the series resistance to maintain a constant output voltage. Because the variable resistance of Figure 6-1 is actually one or more power transistor operating in the linear (class A) mode, supplies with this type of regulator are often called linear power supplies. Linear power supplies have many advantages and usually provide the simplest most effective means of satisfying high performance and low power requirements.

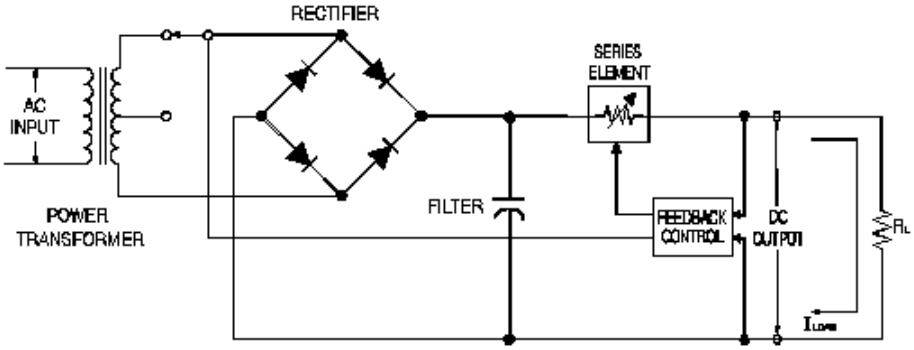


**Figure 6-1** Diagram of a simple series power supply with tap selection

To keep the voltage across the series resistance low, some supplies use preregulation before the rectifier bridge. Figure 6-1 shows a controlled transformer tap as used in the Agilent E3632A. This is one of several techniques using semiconductors for preregulation to reduce the power dissipated across the series element.

In terms of performance, a linear regulated supply has a very precise regulating properties and responds quickly to variations of the line and load. Hence, its line and load regulation and transient recovery time are superior to supplies using other regulation techniques. The power supply also exhibits low ripple and noise, is tolerant of ambient temperature changes, and with its circuit simplicity, has a high reliability.

The Agilent E3632A contains a linear regulated power supply. It is controlled by a control circuit that provides voltages to program the outputs. The power supply sends back to the control circuits a voltage representing the output at the terminals. The control circuits receive information from the front panel and send information to the display. Similarly the control circuits “talk” to the remote interface for input and output with the GPIB and RS-232 interfaces. The remote interface is at earth ground and isolated from the control circuit and the power supply.

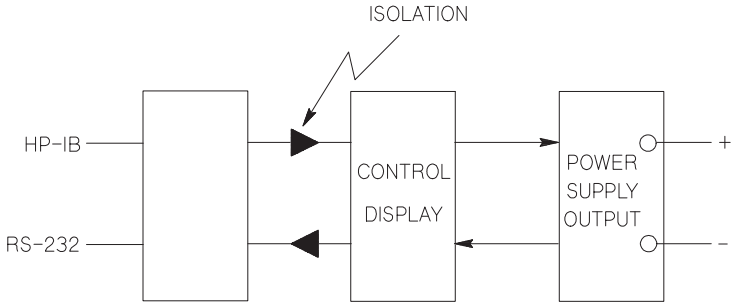


**Figure 6-2** Block diagram of the power supply showing the remote interface isolation

# Output Characteristics

An ideal constant-voltage power supply would have a zero output impedance at all frequencies. Thus, as shown in Figure 6-3, the voltage would remain perfectly constant in spite of any changes in output current demanded by the load.

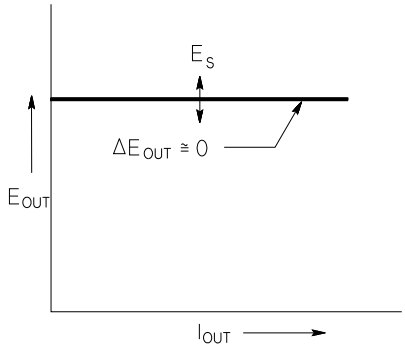


**Figure 6-3** Ideal constant voltage power supply

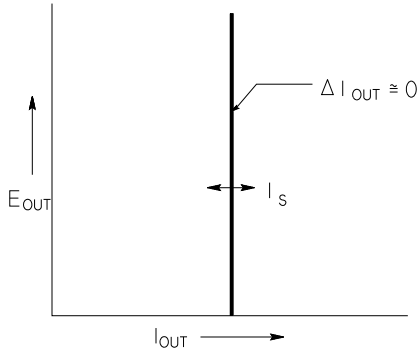


**Figure 6-4** Ideal constant current power supply

The ideal constant current power supply exhibits an infinite output impedance at all frequencies. Thus as Figure 6-4 indicates, the ideal constant current power supply would accommodate a load resistance change by altering its output voltage by just the amount necessary to maintain its output current at a constant value.

The output of the E3632A power supply can operate in either constant-voltage (CV) mode or constant current (CC) mode. Under certain fault conditions, the power supply can not operate in either CV or CC mode and becomes unregulated.

Figure 6-5 shows the operating modes of the output of the Agilent E3632A power supply. The operating point of one supply will be either above or below the line $R_L = R_C$. This line represents a load where the output voltage and the output current are equal to the voltage and current setting. When the load $R_L$ is greater than $R_C$, the output voltage will dominate since the current will be less then the current setting. The power supply is said to be in constant voltage mode. The load at point 1 has a relatively high resistance value (compared to $R_C$), the output voltage is at the voltage setting, and the output current is less than the current setting. In this case the power supply is in the constant voltage mode and the current setting acts as a current limit.

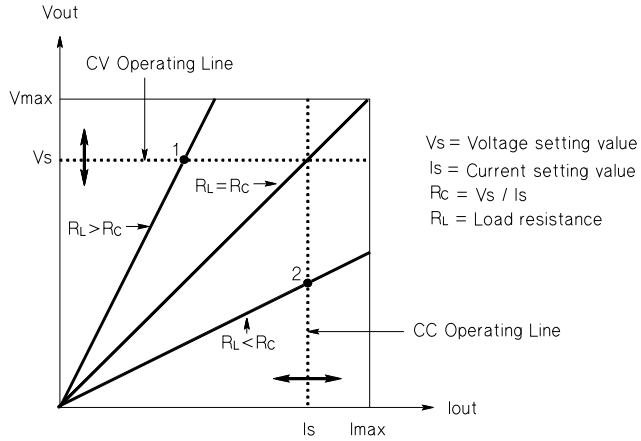


**Figure 6-5** Output characteristics

When the load $R_L$ is less than $R_C$, the output current will dominate since the voltage will be less than the set voltage. The power supply is said to be in constant current mode. The load at point 2 has a relatively low resistance, the output voltage is less than the voltage setting, the output current is at the current setting. The supply is in constant current mode and the voltage setting acts as a voltage limit.

## Unregulated state

If the power supply should goes into a mode of operation that is neither CV or CC, the power supply is unregulated. In this mode the output is not predictable. The unregulated condition may be the result of the AC line voltage below the specifications. The unregulated condition may occur momentarily. For example when the output is programmed for a large voltage step, the output capacitor or a large capacitive load will charge up at the current limit setting. During the ramp up of the output voltage the power supply will be in the unregulated mode. During the transition from CV to CC as when the output is shorted, the unregulated state may occur briefly during the transition.

## Unwanted signals

An ideal power supply has a perfect DC output with no signals across the terminals or from the terminals to earth ground. The actual power supply has finite noise across the output terminals, and a finite current will flow through any impedance connected from either terminal to the earth ground or terminals from the earth ground. The first is called normal mode voltage noise and the second common mode current noise.

Normal mode voltage noise is in the form of ripple related to the line frequency plus some random noise. Both of these are of very low value in the Agilent E3632A. Careful lead layout and keeping the power supply circuitry away from power devices and other noise sources will keep these values low.

Common mode noise can be a problem for very sensitive circuitry that is referenced to earth ground. When a circuit is referenced to earth ground, a low level line – related AC current will flow from the output terminals to earth ground. Any impedance to earth ground will create a voltage drop equal to the current flow multiplied by the impedance. To minimize this effect, the output terminal can be grounded at the output terminal. Alternatively, any impedances to earth ground should have a complementary impedance to earth ground to cancel any generated voltages. If the circuit is not referenced to earth ground, common mode power line noise is typically not a problem.

The output will also change due to changes in the load. As the load increases the output current will cause a small drop in the output voltage of the power supply due to the output impedance R. Any resistance in the connecting wire will add to this resistance and increase the voltage drop. Using the largest possible hook-up wire will minimize the voltage drop. Using the remote sense leads at the load will compensate for lead resistance in the load leads.

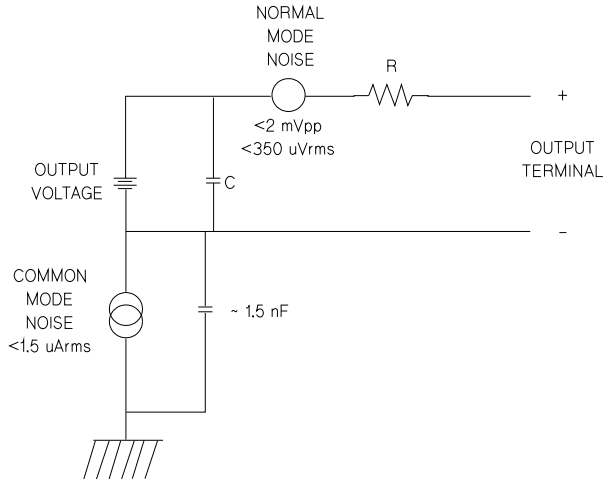


**Figure 6-6** Simplified diagram of the common mode and normal mode sources of noise

When the load changes very rapidly, as when a relay contact is closed, the inductance in the hook-up wire and in the power supply output will cause a spike to appear at the load. The spike is a function of the rate of change of the load current. When very rapid changes in load are expected, a capacitor with a low series resistance, in parallel with the power supply, and close to the load is the best way to minimize these voltage spikes.

# Connecting the Load

## Output isolation

The output of the power supply is isolated from chassis ground. Any output terminal may be grounded, or an external voltage source may be connected between any terminal output and ground. However, output terminals must be kept within ±60 Vdc when metal shorting bars without insulation are used to connect the (+) output to the (+) sense and the (–) output and the (–) sense terminals or ±240 Vdc of ground when metal shorting bars without insulation are either replaced with insulated conductors or they are removed from the terminals so there is no operator access to the output conductors without insulation. A chassis ground terminal is provided on the front panel for convenience.

## Multiple loads

When connecting multiple loads to the power supply, each load should be connected to the output terminals using separate connecting wires. This minimizes mutual coupling effects between loads and takes full advantage of the low output impedance of the power supply. Each pair of the wires should be as short as possible and twisted or shielded to reduce lead inductance and noise pick-up. If a shield is used, connect one end to the power supply ground terminal and leave the other end disconnected.

If cabling considerations require the use of distribution terminals that are located remotely from the power supply, connect output terminals to the distribution terminals by a pair of twisted or shielded wires. Connect each load to the distribution terminals separately.

**Table 6-1** Wire rating

| **AWG** | 10 | 12 | 14 | 16 | 18 | 20 | 22 | 24 | 26 | 28 |
|---|---|---|---|---|---|---|---|---|---|---|
| **Suggested maximum Current(amps)**[1] | 40 | 25 | 20 | 13 | 10 | 7 | 5 | 3.5 | 2.5 | 1.7 |
| **mΩ/ft** | 1.00 | 1.59 | 2.53 | 4.02 | 6.39 | 10.2 | 16.1 | 25.7 | 40.8 | 64.9 |
| **mΩ/m** | 3.3 | 5.2 | 8.3 | 13.2 | 21.0 | 33.5 | 52.8 | 84.3 | 133.9 | 212.9 |

[1] Single conductor in gree air at 30 °C with insulation

**WARNING** **To satisfy safety requirements, load wires must be heavy enough not to overheat while carrying the short-circuit output current of the power supply.**

## Remote voltage sensing

Normally, a power supply operating in the constant voltage mode achieves its optimum line and load regulations, its lowest output impedance, drift, and ripple and noise, and its fastest transient recovery performance at the power supply output terminals. If the load is separated from the output terminals by any lead length, some of these performance characteristics will be degraded at the load terminals – usually by an amount proportional to the impedance of the load leads compared with the output impedance of the power supply.

With remote voltage sensing, a feature included in the Agilent E3632A power supply, it is possible to connect the input of the voltage feedback amplifier directly to the load terminals so that the regulator performs its function with respect to the load terminals rather than with respect to the power supply output terminals. Thus, the voltage at the power supply output terminals shifts by whatever amount is necessary to compensate for the voltage drop in the load leads, thereby maintaining the voltage at the load terminals constant.

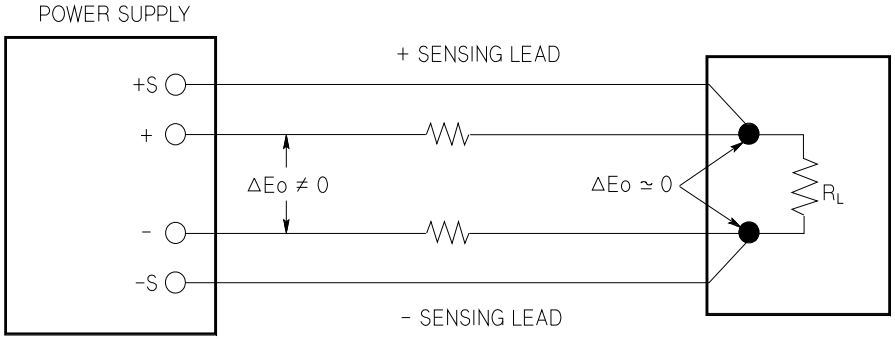


**Figure 6-7** Regulated power supply with remote sensing

## Load consideration

### Capacitive loading

In most cases, the power supply will be stable for almost any size load capacitance. Large load capacitors may cause ringing in the power supply's transient response. It is possible that certain combinations of load capacitance, equivalent series resistance, and load lead inductance will result in instability. If this occurs, the problem may often be solved by either increasing or decreasing the total load capacitance.

A large load capacitor may cause the power supply to cross into CC or unregulated mode momentarily when the output voltage is reprogrammed. The slew rate of the output voltage will be limited to the current setting divided by the total load capacitance (internal and external).

**Table 6-2** Slew rate

| Internal capacitance | Internal bleed resistor | Slew rate at no load and full scale current setting |
|---|---|---|
| 470 µF | 5 KΩ | 1.5 V/ms |

## Inductive loading

Inductive loads present no loop stability problems in constant voltage mode. In constant current mode, inductive loads form a parallel resonance with the power supply's output capacitor. Generally this will not affect the stability of the power supply, but it may cause ringing of the current in the load.

## Pulse loading

In some applications the load current varies periodically from a minimum to a maximum value. The constant current circuit limits the output current. Some peak loading exceeding the current limit can be obtained due to the output capacitor. To stay within the specifications for the output, the current limit should be set greater than the peak current expected or the supply may go into CC mode or unregulated mode for brief periods.

### Reverse current loading

An active load connected to the supply may actually deliver a reverse current to the supply during a portion of its operating cycle. An external source can not be allowed to pump current into the supply without risking loss of regulation and possible damage. These effects can be avoided by preloading the output with a dummy load resistor. The dummy load resistor should draw at least the same amount of current from the supply as the active load may deliver to the supply. The value of the current for the dummy load plus the value of the current the load draws from the supply must be less than the maximum current of the supply.

# Extending the Voltage Range and Current Range

The power supply may be able to provide voltages and currents greater than its rated maximum outputs if the power-line voltage is at or above its nominal value. Operation can be extended up to 3% over the rated output without damage to the power supply, but performance can not be guaranteed to meet specifications in this region. If the power-line voltage is maintained in the upper end of the input voltage range, the power supply will probably operate within its specifications. The power supply is more likely to stay within specifications if only one of the voltage or current outputs is exceeded.

## Series connections

Series operation of two or more power supplies can be accomplished up to the output isolation rating of any one supply to obtain a higher voltage than that available from a single supply. Series connected power supplies can be operated with one load across both power supplies or with a separate load for each power supply. The power supply has a reverse polarity diode connected across the output terminals so that if operated in series with other power supplies, damage will not occur if the load is short-circuited or if one power supply is turned on separately from its series partners.

When series connection is used, the output voltage is the sum of the voltages of the individual power supplies. The current is the current of any one power supply. Each of the individual power supplies must be adjusted in order to obtain the total output voltage.

## Parallel connections

Two or more power supplies being capable of CV/CC automatic crossover operation can be connected in parallel to obtain a total output current greater than that available from one power supply. The total output current is the sum of the output currents of the individual power supplies. The output of each power supply can be set separately. The output voltage controls of one power supply should be set to the desired output voltage; the other power supply should be set for a slightly higher output voltage. The supply with the higher output voltage setting will deliver its constant current output, and drop its output voltage until it equals the output of the other supply, and the other supply will remain in constant voltage operation and only deliver that fraction of its rated output current which is necessary to fulfill the total load demand.

# Remote Programming

During remote programming a constant-voltage regulated power supply is called upon to change its output voltage rapidly. The most important factor limiting the speed of output voltage change is the output capacitor and load resistor.

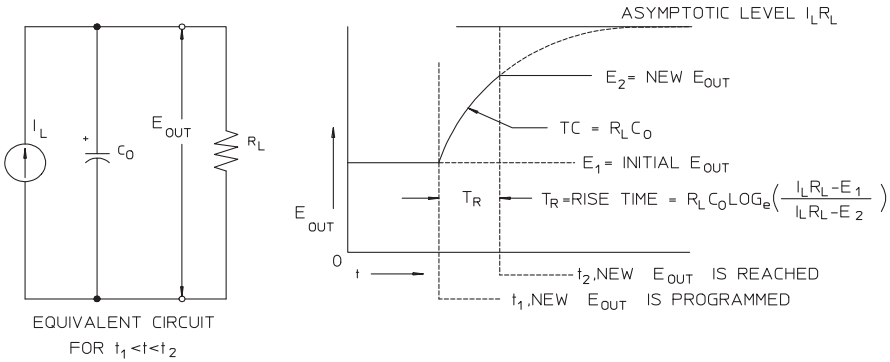


**Figure 6-8** Speed of response — programming up (full load)

The equivalent circuit and the nature of the output voltage waveform when the supply is being programmed upward are shown in Figure 6-8. When the new output is programmed, the power supply regulator circuit senses that the output is less than desired and turns on the series regulator to its maximum value $I_L$, the current limit or constant current setting.

This constant current $I_L$ charges the output capacitor $C_O$ and load resistor $R_L$ parallel. The output therefore rises exponentially with a time constant $R_L C_L$ towards voltage level $I_L R_L$ , a value higher than the new output voltage being programmed.

When this exponential rise reaches the newly programmed voltage level, the constant voltage amplifier resumes its normal regulating action and holds the output constant. Thus, the rise time can be determined approximately using the formula shown in Figure 6-8.

If no load resistor is attached to the power supply output terminal, then the output voltage will rise linearly at a rate of $C_O/I_L$ when programmed upward, and $T_R = C_O(E_2 - E_1)/I_L$, the shortest possible up-programming time.

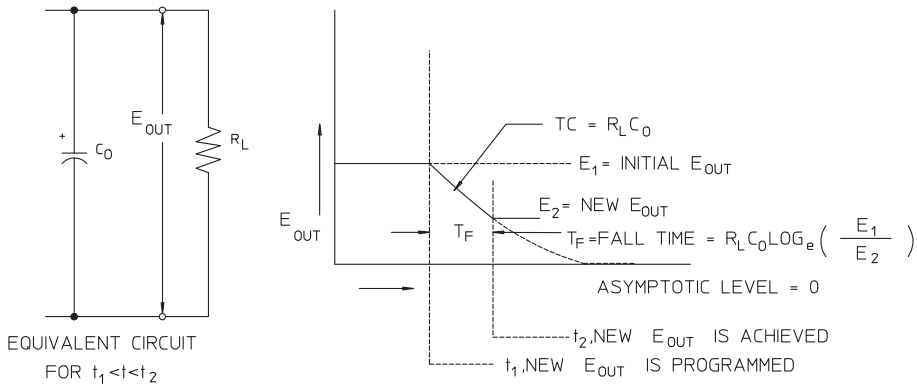


**Figure 6-9** Speed of response — programming down

Figure 6-9 shows that when the power supply is programmed down, the regulator senses that the output voltage is higher than desired and turns off the series transistors entirely. Since the control circuit can in no way cause the series regulator transistors to conduct backwards, the output capacitor can only be discharged through the load resistor and internal current source ($I_S$).

The output voltage decays linearly with slope of $I_S/C_O$ with no load and stops falling when it reaches the new output voltage which has been demanded. If full load is connected, the output voltage will fall exponentially faster.

Since up-programming speed is aided by the conduction of the series regulating transistor, while down programming normally has no active element aiding in the discharge of the output capacitor, laboratory power supplies normally program upward more rapidly than downward.

# Reliability

Reliability of electronic semiconductor equipment depends heavily on the temperature of the components. The lower the temperature of the components, the better the reliability. The Agilent E3632A incorporate circuitry to reduce the internal power dissipation of the power supply and therefore reduce the internal heat of the power supply. Maximum internal power dissipation occurs at maximum current. The internal power dissipation further increases as the output voltage is lowered. A fan internal to the Agilent E3632A is essential to keep internal temperatures low. To assist in cooling the Agilent E3632A, the sides and rear of the Agilent E3632A should be kept clear.

# 7
# Characteristics and Specifications

Physical Characteristics 168
Environmental Characteristics 169
Electrical Specifications 169
Supplemental Characteristics 171

This chapter lists the characteristics and specifications of the E3632A DC power supply.

**NOTE** Specifications are warranted in the temperature range of 0 to 40 °C with a resistive load. Supplemental characteristics, which are not warranted but are descriptions of performance determined either by design or testing.

# Physical Characteristics

**Table 7-1** Physical characteristics

| | | |
|---|---|---|
| **Dimensions (W × H × D)** | | 212.6 mm × 132.6 mm × 348.2 mm |
| **Weight** | Net | 9.5 kg |
| | Shipping | 12 kg |
| **Cooling** | | Fan cooled |

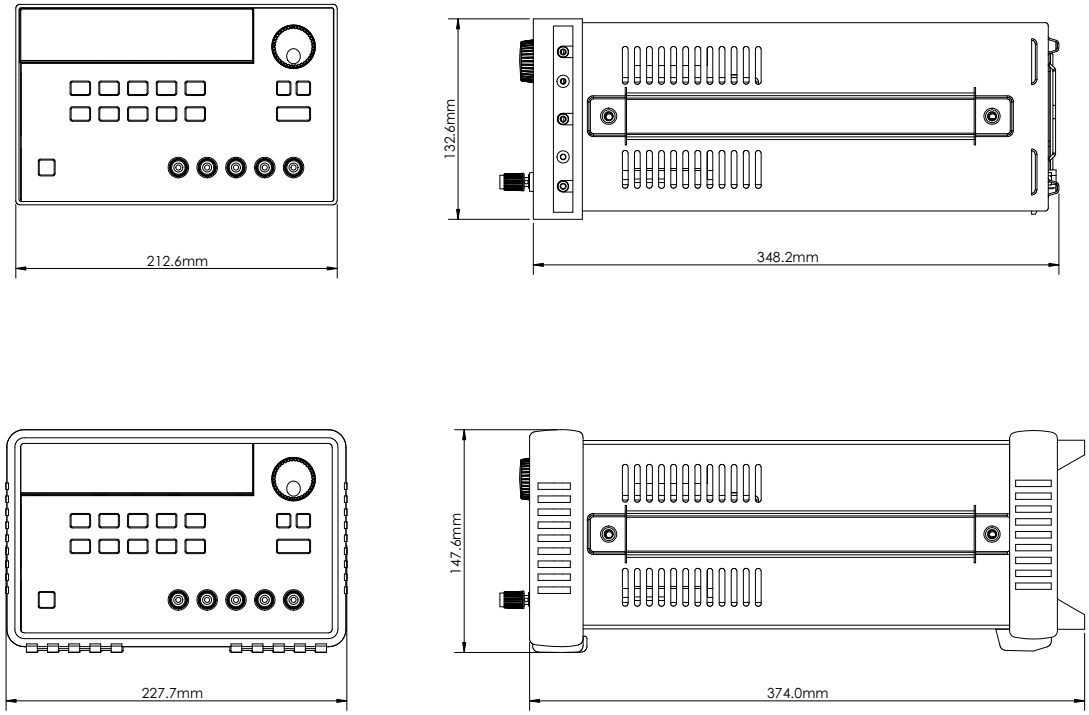


**Figure 7-1** E3632A dimensions

# Environmental Characteristics

Refer to "Environmental Conditions" on page VI

# Electrical Specifications

**Table 7-2** Electrical specifications

| | | |
|---|---|---|
| **Voltage output (V)**<br>(at 0 °C to 40 °C) | Low range | 0 V to +15 V |
| | High range | 0 V to +30 V |
| **Current output (A)**<br>(at 0 °C to 40 °C) | Low range | 0 A to 7 A |
| | High range | 0 A to 4 A |
| **Programming accuracy**[1]<br>12 months (at 25 °C ±5 °C, ±(% of output + offset) | Voltage | 0.05% + 10 mV |
| | Current | 0.2% + 10 mA |
| **Readback accuracy**[1]<br>12 months (over GPIB and RS-232 or front panel with respect to the actual output at 25 °C ±5 °C), ±(% of output + offset) | Voltage | 0.05% + 5 mV |
| | Current | 0.15% + 5 mA |
| **Ripple and noise**<br>(with outputs ungrounded, or with either output terminal grounded, 20 Hz to 20 MHz) | Normal mode voltage | <0.35 mVrms and 2 mVpp |
| | Normal mode current | <2 mArms |
| | Common mode current | <1.5 µArms |
| **Load regulation**<br>±(% of output + offset)<br>(Change in output voltage or current for any load change within ratings with remote sensing connected) | Voltage | <0.01% + 2 mV |
| | Current | <0.01% + 250 µA |

**Table 7-2** Electrical specifications (continued)

| | | |
|---|---|---|
| **Line regulation**<br>±(% of output + offset)<br>(Change in output voltage and current for any line change within ratings) | Voltage | <0.01% + 2 mV |
| | Current | <0.01% + 250 µA |
| **Programming resolution** | Voltage | 1 mV |
| | Current | 0.5 mA |
| **Readback resolution** | Voltage | 0.5 mV |
| | Current | 0.1 mA |
| **Front panel resolution** | Voltage | 1 mV |
| | Current | 1 mA |
| **Transient response time** | | <50 µs for the output to recover to within 15 mV following a change in the output current from full load to half load, or vice versa. |
| **Command processing time** | | Average time for the output voltage to begin to change after receiving the digital data when the power supply is connected directly to the GPIB or RS-232 is less than 100 ms |
| **OVP and OCP accuracy**<br>±(% of output + offset) | Overvoltage protection (OVP) | 0.5% +0.5 V |
| | Overcurrent protection (OCP) | 0.5% +0.5 A |
| **Activation time**<br>(Average time for the output to start to drop after OVP or OCP condition occurs) | OVP | • <1.5 ms when the trip voltage is equal or greater than 3 V<br>• <10 ms when the trip voltage is less than 3 V |
| | OCP | <10 ms |

[1] Accuracy specifications after a 1-hour warm-up period with no load and calibration at 25 °C.

# Supplemental Characteristics

**Table 7-3** Supplemental characteristics

| | | |
|---|---|---|
| **Output programming range**<br>(maximum programmable values) | Low range | 0 V to 15.45 V<br>0 V to 7.21 A |
| | High range | 0 V to +20.6 V<br>0 V to 1.545 A |
| | OVP | 1 V to 32 V |
| | OCP | 0 A to 7.5 A |
| **Remote sensing capability** | Voltage drop | Up to 1 V per each lead |
| | Load regulation | Add 5 mV to specification for each 1 V change in the + output lead due to load current changes. |
| | Load voltage | Subtract the voltage drop in the load leads from the specified output voltage rating. |
| **Temperature coefficient**[1]<br>±(% of output + offset) | Voltage | <0.01% + 3 mV |
| | Current | <0.02% + 3 mA |
| **Stability**[2]<br>±(% of output + offset) | Voltage | <0.02% + 1 mV |
| | Current | <0.1% + 1 mA |
| **Voltage programming speed**[3] | Up | • 50 ms (full load)<br>• 20 ms (no load) |
| | Down | • 45 ms (full load)<br>• 400 ms (no load) |
| **Output terminal isolation**<br>(maximum, from chassis ground) | | • ±60 Vdc when connecting shorting conductors without insulation between the (+) output and the (+) sense terminals and between the (–) output and the (–) sense terminals.<br>• ±240 Vdc when connecting insulated shorting conductors between the (+) output and the (+) sense terminals and between the (–) output and the (–) sense terminals. |
| **AC input ratings**<br>(selectable via rear panel selector) | | • 115 Vac ±10%, 47 Hz to 63 Hz (standard)<br>• 230 Vac ±10%. 47 Hz to 63 Hz (option 0E3)<br>• 100 Vac ±10%, 47 Hz to 63 Hz (option 0E9) |

**Table 7-3** Supplemental characteristics (continued)

| | |
|---|---|
| **Maximum input power** | 500 VA with full load |
| **Output voltage overshoot[4]** | <1 V |
| **Programming language** | SCPI (Standard Commands for Programmable Instruments) |
| **State storage memory** | Three user-configurable stored states |
| **Recommended calibration interval** | 1 year |

[1] Maximum change in the output or readback per °C after a 30-minute warm-up.

[2] Following a 30-minute warm-up, with the output in the ON state according to the operating mode (CC with load or CV), and with a change in the output over 8 hours under constant load, line, and ambient temperature.

[3] Maximum time required for output voltage to settle within 1% of its total excursion (for resistive load). Excludes command processing time.

[4] During turn-on or turn-off of the AC power, if the output control is set to less than 1 V. If the output control is set to 1 V or higher, there is no overshoot.

**www.agilent.com**

**Contact us**

To obtain service, warranty, or technical assistance, contact us at the following phone or fax numbers:


United States:
(tel) 800 829 4444 (fax) 800 829 4433
Canada:
(tel) 877 894 4414 (fax) 800 746 4866
China:
(tel) 800 810 0189 (fax) 800 820 2816
Europe:
(tel) 31 20 547 2111
Japan:
(tel) 0120 (421) 345 (fax) 0120 (421) 678
Korea:
(tel) (080) 769 0800 (fax) (080) 769 0900
Latin America:
(tel) (305) 269 7500
Taiwan:
(tel) 0800 047 866 (fax) 0800 286 331
Other Asia Pacific Countries:
(tel) (65) 6375 8100 (fax) (65) 6755 0042


Or visit Agilent World Wide Web at:
www.agilent.com/find/assist

Product specifications and descriptions in this document are subject to change without notice. Always refer to the English version at the Agilent Web site for the latest revision.

© Agilent Technologies, Inc. 1997–2013


Sixth Edition, October 3, 2013
E3632-90001


Agilent Technologies