FLUKE®

725

Multifunction Process Calibrator

Users Manual

October, 1998 Rev.3, 5/04

© 1998-2004 Fluke Corporation, All rights reserved.
All product names are trademarks of their respective companies.

sales@prom-elec.com / ООО ПРОМЭЛЕКТРОНИКА

LIMITED WARRANTY AND LIMITATION OF LIABILITY

Each Fluke product is warranted to be free from defects in material and workmanship under normal use and service. The warranty period is three years and begins on the date of shipment. Parts, product repairs, and services are warranted for 90 days. This warranty extends only to the original buyer or end-user customer of a Fluke authorized reseller, and does not apply to fuses, disposable batteries, or to any product which, in Fluke's opinion, has been misused, altered, neglected, contaminated, or damaged by accident or abnormal conditions of operation or handling. Fluke warrants that software will operate substantially in accordance with its functional specifications for 90 days and that it has been properly recorded on non-defective media. Fluke does not warrant that software will be error free or operate without interruption.

Fluke authorized resellers shall extend this warranty on new and unused products to end-user customers only but have no authority to extend a greater or different warranty on behalf of Fluke. Warranty support is available only if product is purchased through a Fluke authorized sales outlet or Buyer has paid the applicable international price. Fluke reserves the right to invoice Buyer for importation costs of repair/replacement parts when product purchased in one country is submitted for repair in another country.

Fluke's warranty obligation is limited, at Fluke's option, to refund of the purchase price, free of charge repair, or replacement of a defective product which is returned to a Fluke authorized service center within the warranty period.
To obtain warranty service, contact your nearest Fluke authorized service center to obtain return authorization information, then send the product to that service center, with a description of the difficulty, postage and insurance prepaid (FOB Destination). Fluke assumes no risk for damage in transit. Following warranty repair, the product will be returned to Buyer, transportation prepaid (FOB Destination). If Fluke determines that failure was caused by neglect, misuse, contamination, alteration, accident, or abnormal condition of operation or handling, including overvoltage failures caused by use outside the product's specified rating, or normal wear and tear of mechanical components, Fluke will provide an estimate of repair costs and obtain authorization before commencing the work. Following repair, the product will be returned to the Buyer transportation prepaid and the Buyer will be billed for the repair and return transportation charges (FOB Shipping Point).

THIS WARRANTY IS BUYER'S SOLE AND EXCLUSIVE REMEDY AND IS IN LIEU OF ALL OTHER WARRANTIES, EXPRESS OR IMPLIED, INCLUDING BUT NOT LIMITED TO ANY IMPLIED WARRANTY OF MERCHANTABILITY OR FITNESS FOR A PARTICULAR PURPOSE. FLUKE SHALL NOT BE LIABLE FOR ANY SPECIAL, INDIRECT, INCIDENTAL OR CONSEQUENTIAL DAMAGES OR LOSSES, INCLUDING LOSS OF DATA, ARISING FROM ANY CAUSE OR THEORY.

Since some countries or states do not allow limitation of the term of an implied warranty, or exclusion or limitation of incidental or consequential damages, the limitations and exclusions of this warranty may not apply to every buyer. If any provision of this Warranty is held invalid or unenforceable by a court or other decision-maker of competent jurisdiction, such holding will not affect the validity or enforceability of any other provision.

Fluke Corporation
P.O. Box 9090
Everett, WA 98206-9090
U.S.A.

Fluke Europe B.V.
P.O. Box 1186
5602 BD Eindhoven
The Netherlands

11/99

Table of Contents

Title	Page
Introduction	1
Contacting Fluke	1
Standard Equipment	3
Safety Information	3
Getting Acquainted with the Calibrator	8
Input and Output Terminals	8
Keys	10
Display	13
Getting Started	14
Shut Down Mode	14
Contrast Adjustment	16
Using Measure Mode	17
Measuring Electrical Parameters (Upper Display)	17
Current Measurement with Loop Power	17
Measuring Electrical Parameters (Lower Display)	19
Measuring Temperature	20

Using Thermocouples 20
Using Resistance-Temperature Detectors (RTDs) 23
Measuring Pressure 26
Zeroing with Absolute Pressure Modules 27
Using Source Mode 29
Sourcing 4 to 20 mA 29
Simulating a 4- to 20-mA Transmitter 29
Sourcing Other Electrical Parameters 29
Simulating Thermocouples 32
Simulating RTDs 32
Sourcing Pressure 35
Setting 0 % and 100 % Output Parameters 37
Stepping and Ramping the Output 37
Manually Stepping the mA Output 37
Auto Ramping the Output 38
Storing and Recalling Setups 38
Calibrating a Transmitter 39
Calibrating a Pressure Transmitter 41
Calibrating an I/P Device 43
Testing an Output Device 45
Remote Control Commands 46
Replacing the Batteries 49
Replacing the Fuses 49
Maintenance 50
Cleaning the Calibrator 50
Service Center Calibration or Repair 50
Replacement Parts 51
Accessories 53

External Fluke Pressure Module Compatibility 53
Specifications..... 56
DC Voltage Measurement..... 56
DC Voltage Source 56
Millivolt Measurement and Source*..... 56
DC mA Measurement and Source 57
Ohms Measurement..... 57
Ohms Source 57
Frequency Measurement 57
Frequency Source..... 58
Temperature, Thermocouples..... 58
Loop Power Supply..... 59
RTD Excitation (simulation) 59
Temperature, RTD Ranges, and Accuracies (ITS-90) 59
Pressure Measurement..... 60
General Specifications 60

List of Tables

Table	Title	Page
1.	Summary of Source and Measure Functions	2
2.	International Symbols	7
3.	Input/Output Terminals and Connectors	9
4.	Key Functions	11
5.	Thermocouple Types Accepted	21
6.	RTD Types Accepted	24
7.	mA Step Values	38
8A.	Remote Control Upper Display	46
8B.	Remote Control Lower Display	46
8C.	"S" Commands Select Sensor Type	48
9.	Replacement Parts	51
10.	Fluke Pressure Module Compatibility	53
11.	Pressure Modules	54

List of Figures

Figure	Title	Page
1.	Standard Equipment	6
2.	Input/Output Terminals and Connectors	8
3.	Keys	10
4.	Elements of a Typical Display	13
5.	Voltage-to-Voltage Test	15
6.	Adjusting the Contrast	16
7.	Measuring Voltage and Current Output	17
8.	Connections for Supplying Loop Power	18
9.	Measuring Electrical Parameters	19
10.	Measuring Temperature with a Thermocouple	22
11.	Measuring Temperature with an RTD, Measuring 2-, 3-, and 4-Wire Resistance	25
12.	Gage and Differential Pressure Modules	26
13.	Connections for Measuring Pressure	28
14.	Connections for Simulating a 4- to 20-mA Transmitter	30
15.	Electrical Sourcing Connections	31
16.	Connections for Simulating a Thermocouple	33
17.	Connection for Simulating a 3-Wire RTD	34

18. Connections for Sourcing Pressure 36
19. Calibrating a Thermocouple Transmitter 40
20. Calibrating a Pressure-to-Current (P/I) Transmitter 42
21. Calibrating a Current-to-Pressure (I/P) Transmitter 44
22. Calibrating a Chart Recorder 45
23. Replacing the Battteries 50
24. Replacement Parts 52

Multifunction Process Calibrator

Introduction

Your Fluke 725 Multifunction Process Calibrator (referred to as “the calibrator”) is a handheld, battery-operated instrument that measures and sources electrical and physical parameters. See Table 1.

In addition to the functions in Table 1, the calibrator has the following features and functions:

- A split-screen display. The upper display allows you to measure volts, current, and pressure only. The lower display allows you to measure and source volts, current, pressure, resistance temperature detectors, thermocouples, frequency, and ohms.
- Calibrates a transmitter using the split-screen.
- A thermocouple (TC) input/output terminal and internal isothermal block with automatic reference-junction temperature compensation.
- Stores and recalls setups.
- Manual stepping and automatic stepping and ramping.
- Controls the calibrator remotely from a PC running a terminal emulator program.

Contacting Fluke

To order accessories, receive operating assistance, or get the location of the nearest Fluke distributor or Service Center, call:

USA: 1-888-99-FLUKE (1-888-993-5853)
Canada: 1-800-36-FLUKE (1-800-363-5853)
Europe: +31 402-675-200
Japan: +81-3-3434-0181
Singapore: +65-738-5655
Anywhere in the world: +1-425-446-5500

Or, visit Fluke's Web site at **www.fluke.com**.

Table 1. Summary of Source and Measure Functions

Function	Measure	Source
dc V	0 V to 30 V	0 V to 10 V
dc mA	0 to 24 mA	0 to 24 mA
Frequency	1 CPM to 10 kHz	1 CPM to 10 kHz
Resistance	0 Ω to 3200 Ω	15 Ω to 3200 Ω
Thermocouple	Types E, J, K, T, B, R, S, L, U, N, mV	
RTD (Resistance-Temperature Detector)	Pt100 Ω (385) Pt100 Ω (3926) Pt100 Ω (3916) Pt200 Ω (385) Pt500 Ω (385) Pt1000 Ω (385) Ni120	
Pressure	27 modules ranging from 10 in. H_2O to 10,000 psi	27 modules ranging from 10 in. H_2O to 10,000 psi using an external pressure source (hand pump)
Other functions	Loop supply, Step, Ramp, Memory, Dual display	

Standard Equipment

The items listed below and shown in Figure 1 are included with your calibrator. If the calibrator is damaged or something is missing, contact the place of purchase immediately. To order replacement parts or spares, see the user-replaceable parts list in Table 9.

- TL75 test leads (one set)
- AC70A alligator clips (one set)
- Stackable alligator clip test leads (one set)
- *725 Product Overview Manual*
- *725 CD-ROM* (contains Users Manual)
- Spare fuse

Safety Information

The calibrator is designed in accordance with IEC1010-1, ANSI/ISA S82.01-1994 and CAN/CSA C22.2 No. 1010.1-92. Use the calibrator only as specified in this manual, otherwise the protection provided by the calibrator may be impaired.

A **Warning** identifies conditions and actions that pose hazard(s) to the user; a **Caution** identifies conditions and actions that may damage the calibrator or the equipment under test.

International symbols used on the calibrator and in this manual are explained in Table 2.

⚠ Warning

To avoid possible electric shock or personal injury:

- **Do not apply more than the rated voltage, as marked on the calibrator, between the terminals, or between any terminal and earth ground (30 V 24 mA max all terminals).**
- **Before each use, verify the calibrator's operation by measuring a known voltage.**
- **Follow all equipment safety procedures.**
- **Never touch the probe to a voltage source when the test leads are plugged into the current terminals.**
- **Do not use the calibrator if it is damaged. Before you use the calibrator, inspect the case. Look for cracks or missing plastic. Pay particular attention to the insulation surrounding the connectors.**
- **Select the proper function and range for your measurement.**
- **Make sure the battery door is closed and latched before you operate the calibrator.**
- **Remove test leads from the calibrator before you open the battery door.**
- **Inspect the test leads for damaged insulation or exposed metal. Check test leads continuity. Replace damaged test leads before you use the calibrator.**
- **When using the probes, keep your fingers away from the probe contacts. Keep your fingers behind the finger guards on the probes.**
- **Connect the common test lead before you connect the live test lead. When you disconnect test leads, disconnect the live test lead first.**
- **Do not use the calibrator if it operates abnormally. Protection may be impaired. When in doubt, have the calibrator serviced.**
- **Do not operate the calibrator around explosive gas, vapor, or dust.**

⚠ Warning

- **When using a pressure module, make sure the process pressure line is shut off and depressurized before you connect it or disconnect it from the pressure module.**
- **Use only 4 AA batteries, properly installed in the calibrator case, to power the calibrator.**
- **Disconnect test leads before changing to another measure or source function.**
- **When servicing the calibrator, use only specified replacement parts.**
- **To avoid false readings, which could lead to possible electric shock or personal injury, replace the battery as soon as the battery indicator (▬) appears.**

Caution

To avoid possible damage to calibrator or to equipment under test:

- **Disconnect the power and discharge all high-voltage capacitors before testing resistance or continuity.**
- **Use the proper jacks, function, and range for your measurement or sourcing application.**

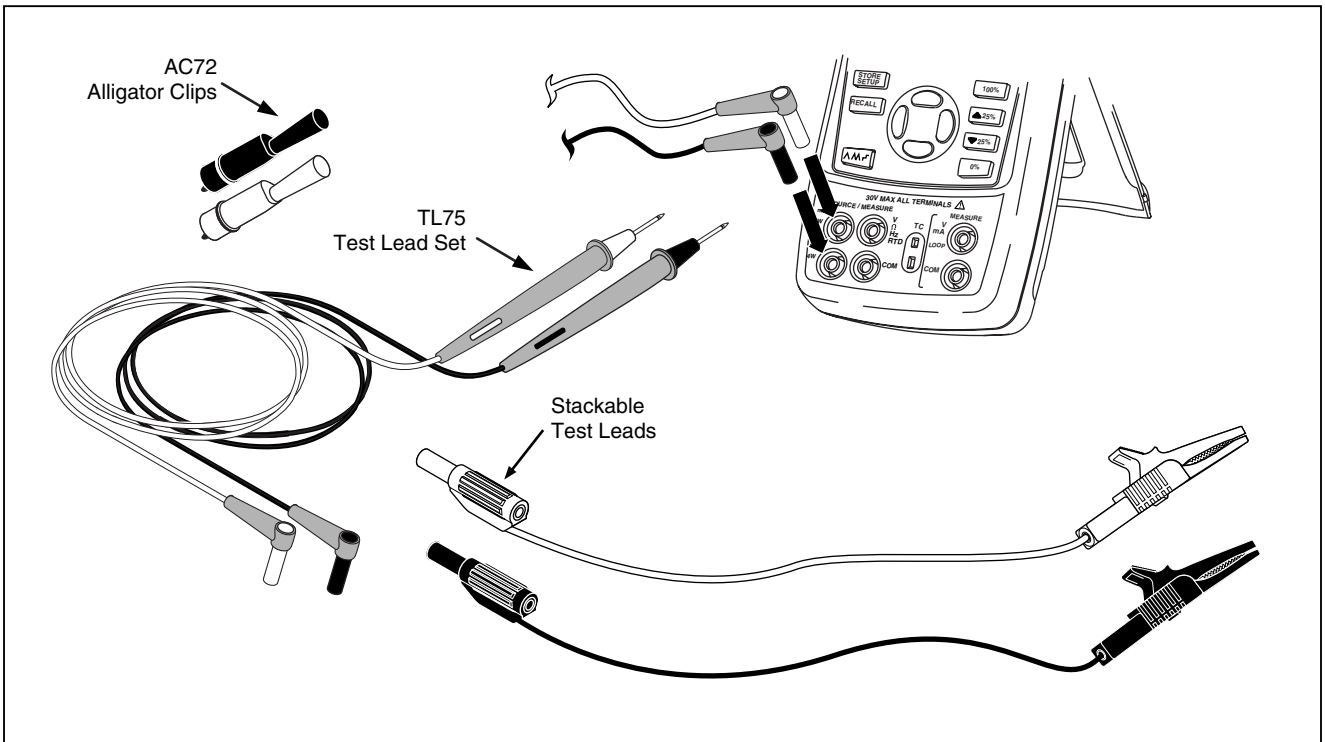

sh01f.eps

Figure 1. Standard Equipment

Table 2. International Symbols

~	AC - Alternating current	⧈	Double insulated
⎓	DC - Direct current		Battery
⏚	Earth ground	⚠	Refer to the manual for information about this feature.
	Pressure	⏻	ON/OFF
C US	Conforms to Canadian Standards Association directives	CE	Conforms to European Union directives

Getting Acquainted with the Calibrator

Input and Output Terminals

Figure 2 shows the calibrator input and output terminals. Table 3 explains their use.

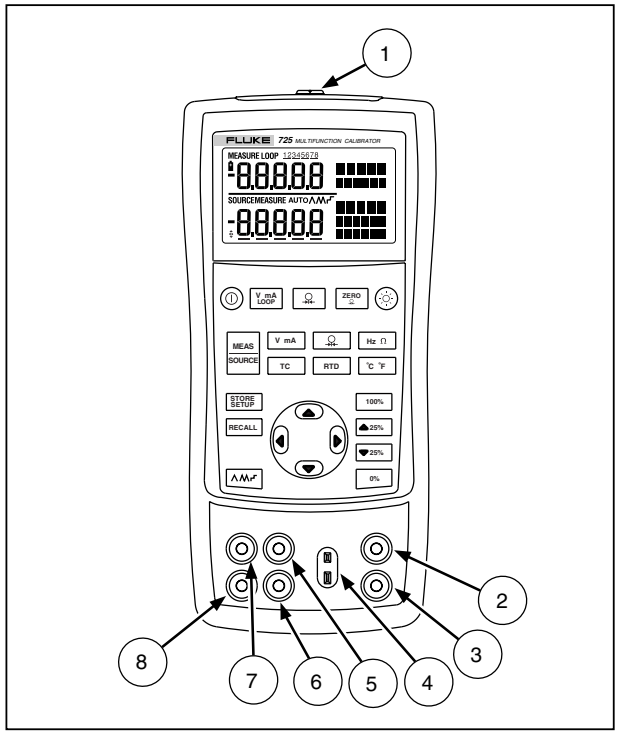

sh05f.eps

Figure 2. Input/Output Terminals and Connectors

Table 3. Input/Output Terminals and Connectors

No	Name	Description
1	Pressure module connector	Connects the calibrator to a pressure module or the calibrator to a PC for a remote control connection.
2, 3	MEASURE V, mA terminals	Input terminals for measuring voltage, current, and supplying loop power.
4	TC input/output	Terminal for measuring or simulating thermocouples. This terminal accepts a miniature polarized thermocouple plug with flat, in-line blades spaced 7.9 mm (0.312 in) center to center.
5, 6	SOURCE/ MEASURE V, RTD, Hz, Ω terminals	Terminals for sourcing or measuring voltage, resistance, frequency, and RTDs.
7, 8	SOURCE/ MEASURE mA terminals, 3W, 4W	Terminals for sourcing and measuring current, and performing 3W and 4W RTD measurements.

Keys

Figure 3 shows the calibrator keys and Table 4 explains their use.

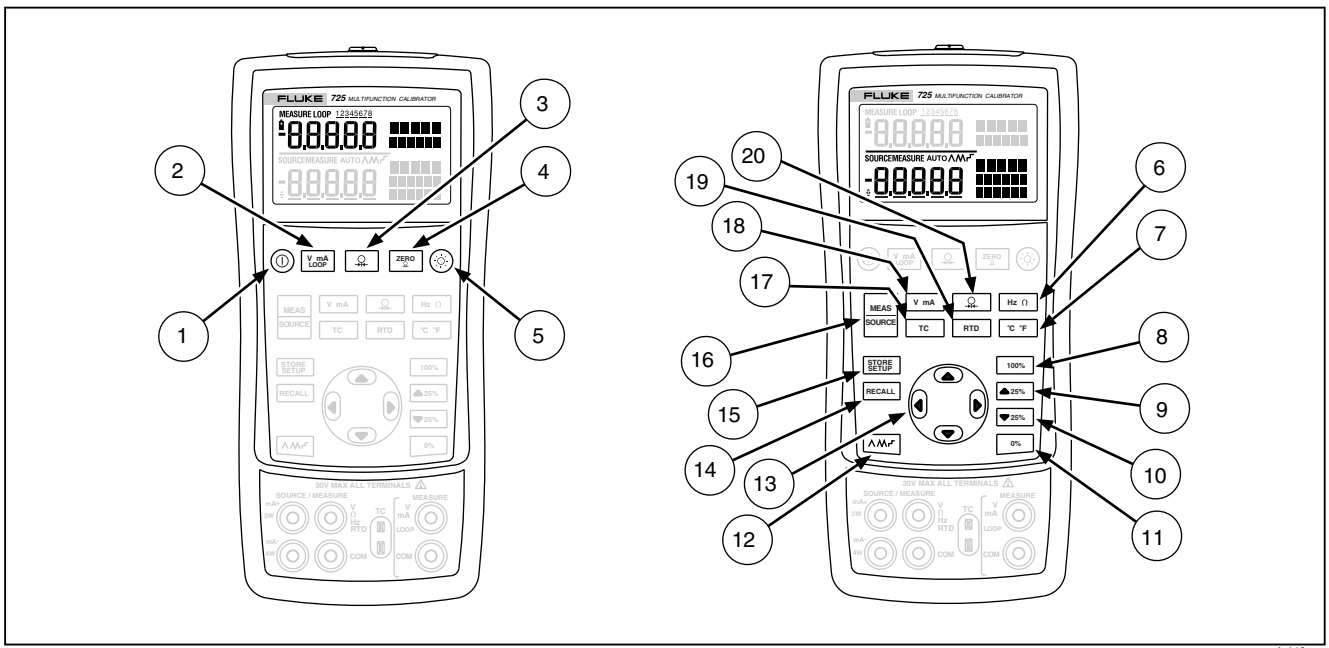

sh41f.eps

Figure 3. Keys

Table 4. Key Functions

No	Name	Description
1	⏻	Turns the power on or off.
2	V mA LOOP	Selects voltage, mA or Loop Power measurement function in the upper display.
3		Selects the pressure measurement function in the upper display. Repeated pushes cycle through the different pressure units.
4	ZERO	Zeros the pressure module reading. This applies to both upper and lower displays.
5	☼	Turns backlight on or off. Turns Contrast Adjust mode on when powering up.
6	Hz Ω	Toggles frequency and ohms measurement and sourcing functions.
7	°C °F	Toggles between Centigrade or Fahrenheit when in TC or RTD functions.
8	100%	Recalls from memory a source value corresponding to 100 % of span and sets it as the source value. Press and hold to store the source value as the 100 % value.
9	▲ 25%	Increments output by 25 % of span.
10	▼ 25%	Decrements output by 25 % of span.
11	0%	Recalls from memory a source value corresponding to 0 % of span and sets it as the source value. Press and hold to store the source value as the 0 % value. Identifies Firmware version. Press and hold 0% when powering up.

Table 4. Key Functions (cont.)

No	Name	Description
12		Cycles through : Slow repeating 0 % - 100 % - 0 % ramp Fast repeating 0 % - 100 % - 0 % ramp Repeating 0 % - 100 % - 0 % ramp in 25 % steps
1 13		Disables Shut Down Mode
1 13		Enables Shut Down Mode
13		Increases or decreases the source level. Cycles through the 2-, 3-, and 4-wire selections. Moves through the memory locations of calibrator setups. In Contrast Adjustment mode; up-darkens contrast, down-lightens contrast.
14	RECALL	Retrieves a previous calibrator setup from a memory location.
15	STORE SETUP	Saves the calibrator setup. Saves Contrast Adjust setup.
16	MEAS SOURCE	Cycles the calibrator through MEASURE and SOURCE modes in the lower display.
17	TC	Selects TC (thermocouple) measurement and sourcing function in the lower display. Repeated pushes cycle through the thermocouple types.
18	V mA	Toggles between voltage, mA sourcing, or mA simulate functions in the lower display.
19	RTD	Selects RTD (resistance temperature detector) measurement and sourcing function in lower display. Repeated pushes cycle through the RTD types.
20		Selects the pressure measurement and sourcing function. Repeated pushes cycle through the different pressure units.

Display

Figure 4 shows the elements of a typical display.

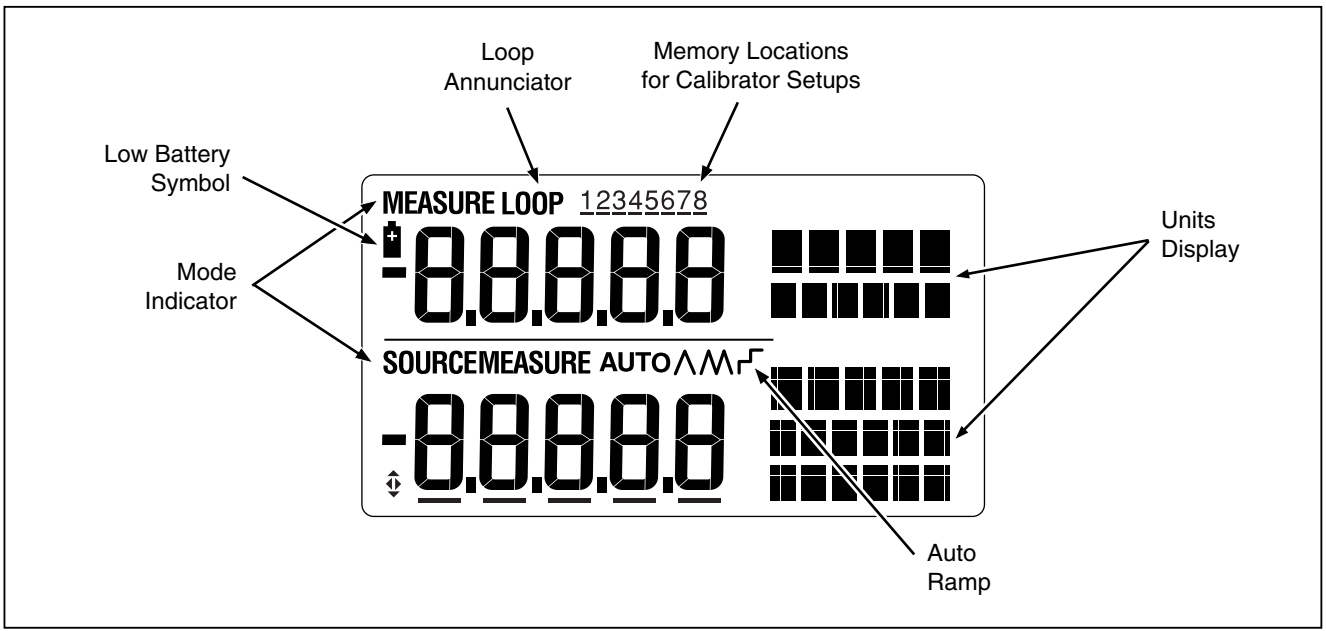

sh07f.eps

Figure 4. Elements of a Typical Display

Getting Started

This section acquaints you with some basic operations of the calibrator.

Proceed as follows to perform a voltage-to-voltage test:

1. Connect the calibrator's voltage output to its voltage input as shown in Figure 5.
2. Press ⏻ to turn on the calibrator. Press [V mA LOOP] to select dc voltage (upper display).
3. If necessary, press [MEAS SOURCE] for SOURCE mode (lower display). The calibrator is still measuring dc voltage, and you can see the active measurements in the upper display.
4. Press [V mA] to select dc voltage sourcing.
5. Press ◀ and ▶ to select a digit to change. Press ▲ to select 1 V for the output value. Press and hold [0%] to enter 1 V as the 0 % value.
6. Press ▲ to increase the output to 5 V. Press and hold [100%] to enter 5 V as the 100 % value.
7. Press [▲25%] and [▼25%] to step between 0 and 100 % in 25 % step increments.

Shut Down Mode

The calibrator comes with the Shut Down mode enabled for a time duration set to 30 minutes (displayed for about 1 second when the calibrator is initially turned on). When the Shut Down mode is enabled, the calibrator will automatically shut down after the time duration has elapsed from the time the last key was pressed. To disable the Shut Down mode, press ⏻ and ◀ simultaneously. To enable the mode, press ⏻ and ▶ simultaneously. To adjust the time duration, press ⏻ and ▶ simultaneously, then press ▲ and/or ▼ to adjust the time between 1 and 30 minutes.

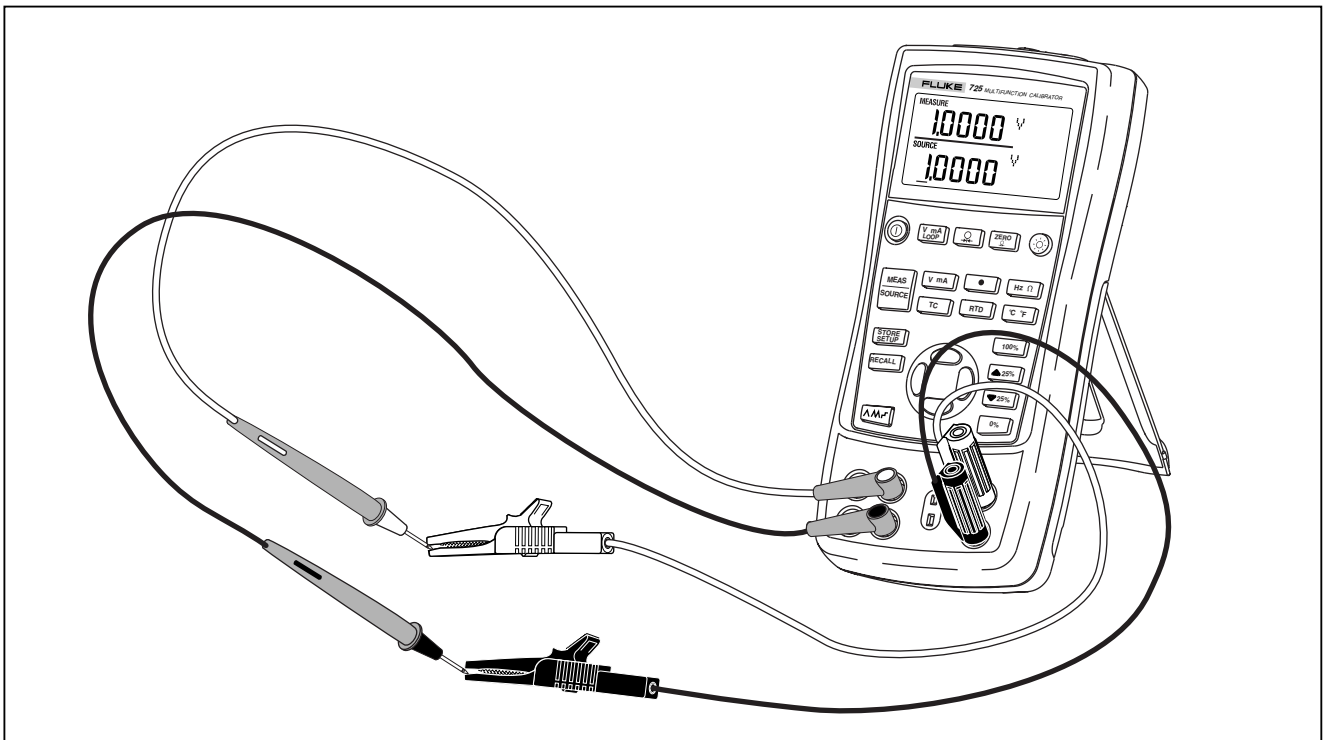

sh39f.eps

Figure 5. Voltage-to-Voltage Test

Contrast Adjustment

Note

Available with V2.1 Firmware or greater. To identify firmware version, press and hold [0%] *when powering up. The firmware version will be shown in the upper units display for about 1 second after initialization.*

To adjust the contrast, proceed as follows:

1. Press ☼ and ⓘ until Contst Adjust is displayed as shown in Figure 6.
2. Press and hold ⌃ to darken contrast.
3. Press and hold ⌄ to lighten contrast.
4. Press [STORE SETUP] to save the contrast level.

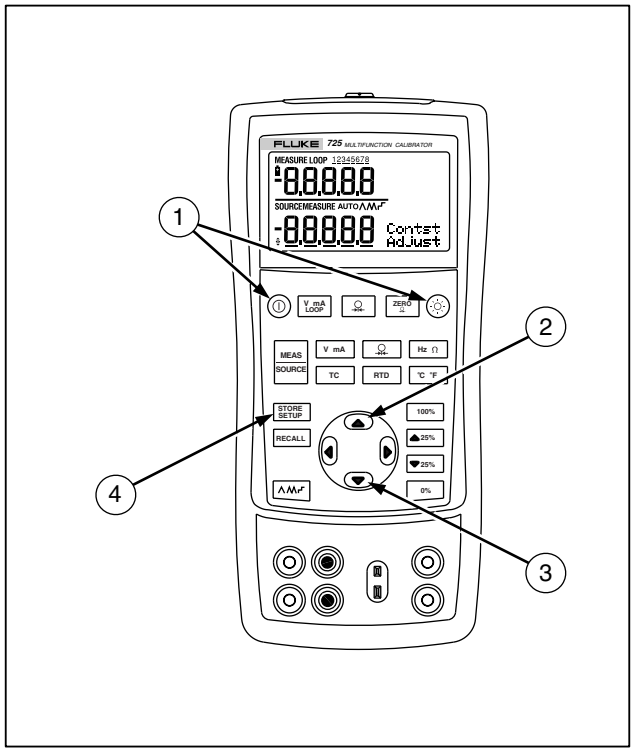

sh06f.eps

Figure 6. Adjusting the Contrast

Using Measure Mode

Measuring Electrical Parameters (Upper Display)

To measure the current or voltage output of a transmitter, or to measure the output of a pressure instrument, use the upper display and proceed as follows:

1. Press [V mA LOOP] to select volts or current. LOOP should not be on.
2. Connect the leads as shown in Figure 7.

Current Measurement with Loop Power

The loop power function activates a 24 V supply in series with the current measuring circuit, allowing you to test a transmitter when it is disconnected from plant wiring. To measure current with loop power, proceed as follows:

1. Connect the calibrator to the transmitter current loop terminals as shown in Figure 8.
2. Press [V mA LOOP] while the calibrator is in current measurement mode. LOOP appears and an internal 24 V loop supply turns on.

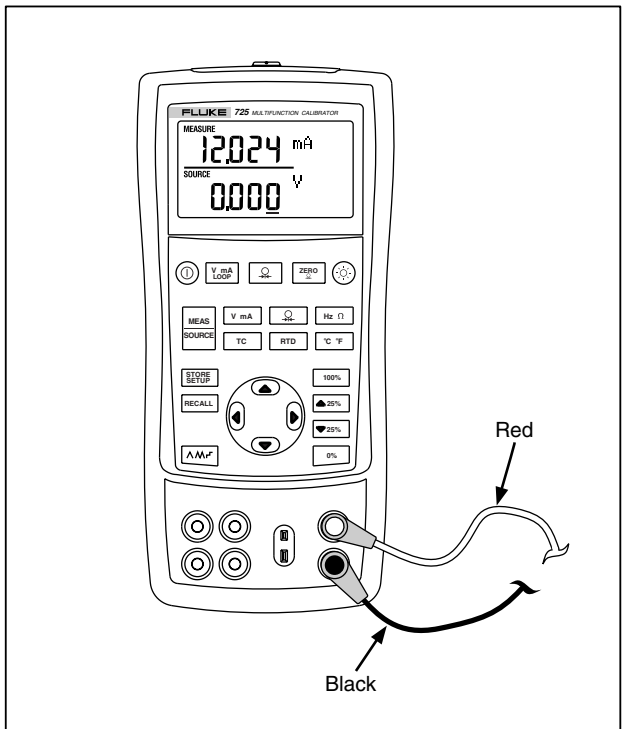

sh42f.eps

Figure 7. Measuring Voltage and Current Output

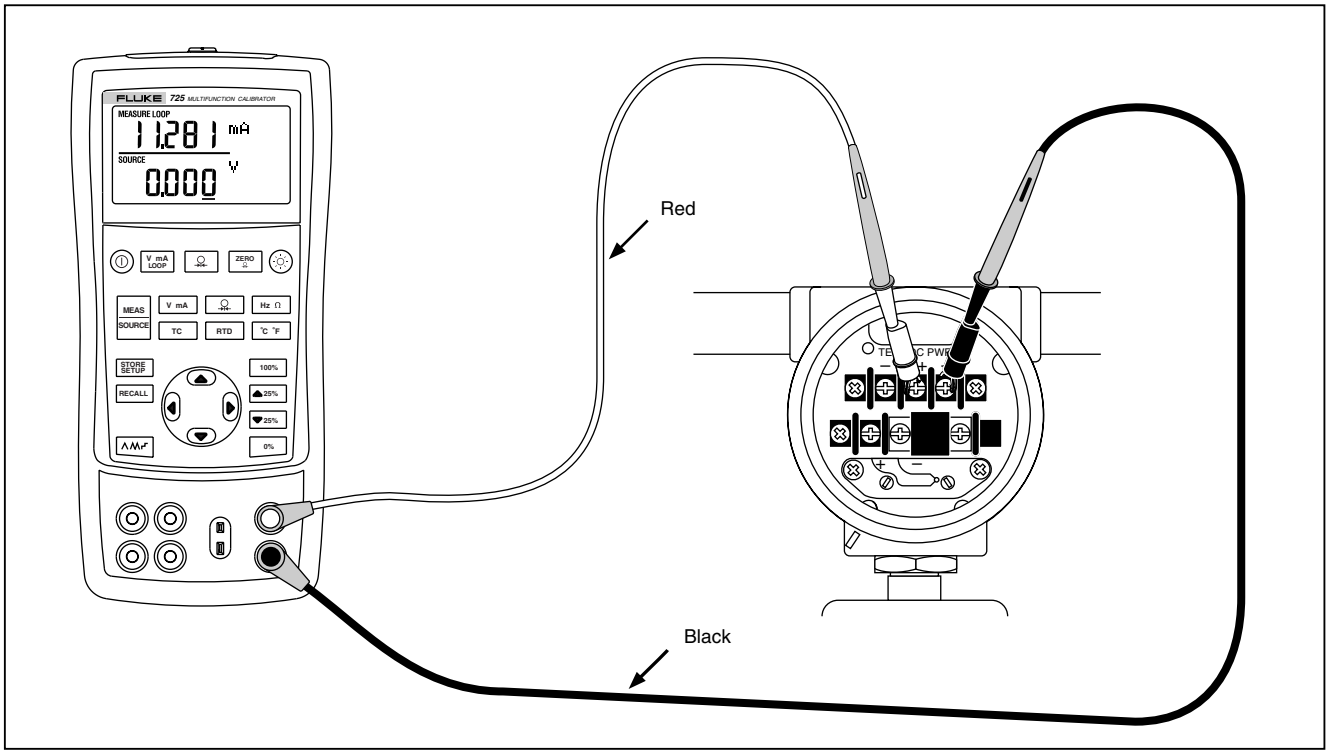

sh18f.eps

Figure 8. Connections for Supplying Loop Power

Measuring Electrical Parameters (Lower Display)

To measure the electrical parameters using the lower display, proceed as follows:

1. Connect the calibrator as shown in Figure 9.
2. If necessary, press [MEAS SOURCE] for MEASURE mode (lower display)
3. Press [V mA] for dc voltage or current, or [Hz Ω] for frequency or resistance.

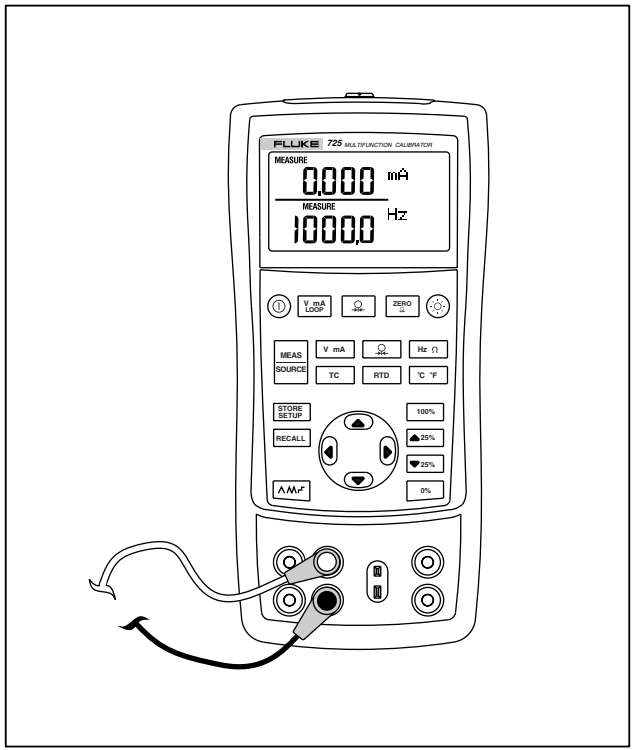

sh43f.eps

Figure 9. Measuring Electrical Parameters

Measuring Temperature

Using Thermocouples

The calibrator supports ten standard thermocouples, including type E, N, J, K, T, B, R, S, L, or U. Table 5 summarizes the ranges and characteristics of the supported thermocouples.

To measure temperature using a thermocouple, proceed as follows:

1. Attach the thermocouple leads to the appropriate TC miniplug, then to the TC input/output as shown in Figure 10. *One pin is wider than the other. Do not try to force a miniplug in the wrong polarization*.

   Note

   If the calibrator and the thermocouple plug are at different temperatures, wait one minute or more for the connector temperature to stabilize after you plug the miniplug into the TC input/output.

2. If necessary, press [MEAS SOURCE] for MEASURE mode.
3. Press [TC] for the TC display. If desired, continue pressing this key to select the desired thermocouple type.

   If necessary, you can toggle between °C or °F temperature units by pressing [°C °F].

Table 5. Thermocouple Types Accepted

Type	Positive Lead Material	Positive Lead (H) Color		Negative Lead Material	Specified Range (°C)
		ANSI*	IEC**		
E	Chromel	Purple	Violet	Constantan	-200 to 950
N	Ni-Cr-Si	Orange	Pink	Ni-Si-Mg	-200 to 1300
J	Iron	White	Black	Constantan	-200 to 1200
K	Chromel	Yellow	Green	Alumel	-200 to 1370
T	Copper	Blue	Brown	Constantan	-200 to 400
B	Platinum (30 % Rhodium)	Gray		Platinum (6 % Rhodium)	600 to 1800
R	Platinum (13 % Rhodium)	Black	Orange	Platinum	-20 to 1750
S	Platinum (10 % Rhodium)	Black	Orange	Platinum	-20 to 1750
L	Iron			Constantan	-200 to 900
U	Copper			Constantan	-200 to 400

*American National Standards Institute (ANSI) device negative lead (L) is always red.

**International Electrotechnical Commission (IEC) device negative lead (L) is always white.

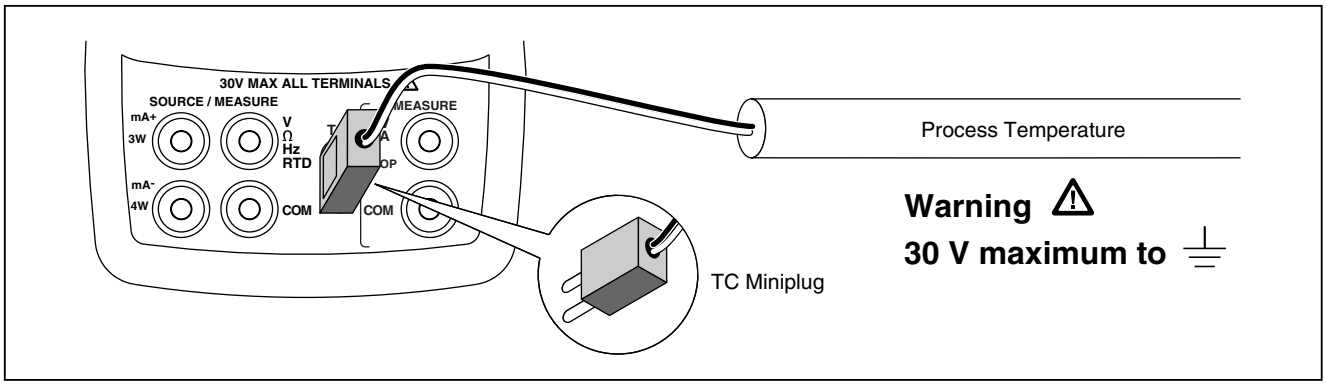

sh12f.eps

Figure 10. Measuring Temperature with a Thermocouple

Using Resistance-Temperature Detectors (RTDs)

The calibrator accepts RTD types shown in Table 6. RTDs are characterized by their resistance at 0 °C (32 °F), which is called the “ice point” or R_0. The most common R_0 is 100 Ω. The calibrator accepts RTD measurement inputs in two-, three-, or four-wire connections, with the three-wire connection the most common. A four-wire configuration provides the highest measurement precision, and two-wire provides the lowest measurement precision.

To measure temperature using an RTD input, proceed as follows:

1. If necessary, press [MEAS SOURCE] for MEASURE mode.
2. Press [RTD] for the RTD display. If desired, continue pressing this key to select the desired RTD type.
3. Press ⌃ or ⌄ to select a 2-, 3-, or 4- wire connection.
4. Attach the RTD to input terminals as shown in Figure 11.
5. If necessary, you can toggle between °C or °F temperature units by pressing [°C °F].

Table 6. RTD Types Accepted

RTD Type	Ice Point (R_0)	Material	α	Range (°C)
Pt100 (3926)	100 Ω	Platinum	0.003926 Ω/°C	-200 to 630
Pt100 (385)	100 Ω	Platinum	0.00385 Ω/°C	-200 to 800
Ni120 (672)	120 Ω	Nickel	0.00672 Ω/°C	-80 to 260
Pt200 (385)	200 Ω	Platinum	0.00385 Ω/°C	-200 to 630
Pt500 (385)	500 Ω	Platinum	0.00385 Ω/°C	-200 to 630
Pt1000 (385)	1000 Ω	Platinum	0.00385 Ω/°C	-200 to 630
Pt100 (3916)	100 Ω	Platinum	0.003916 Ω/°C	-200 to 630
The Pt100 commonly used in U.S. industrial applications is Pt100 (3916), α = 0.003916 Ω/°C. (Also designated as JIS curve.) The IEC standard RTD is the Pt100 (385), α = 0.00385 Ω/°C.				

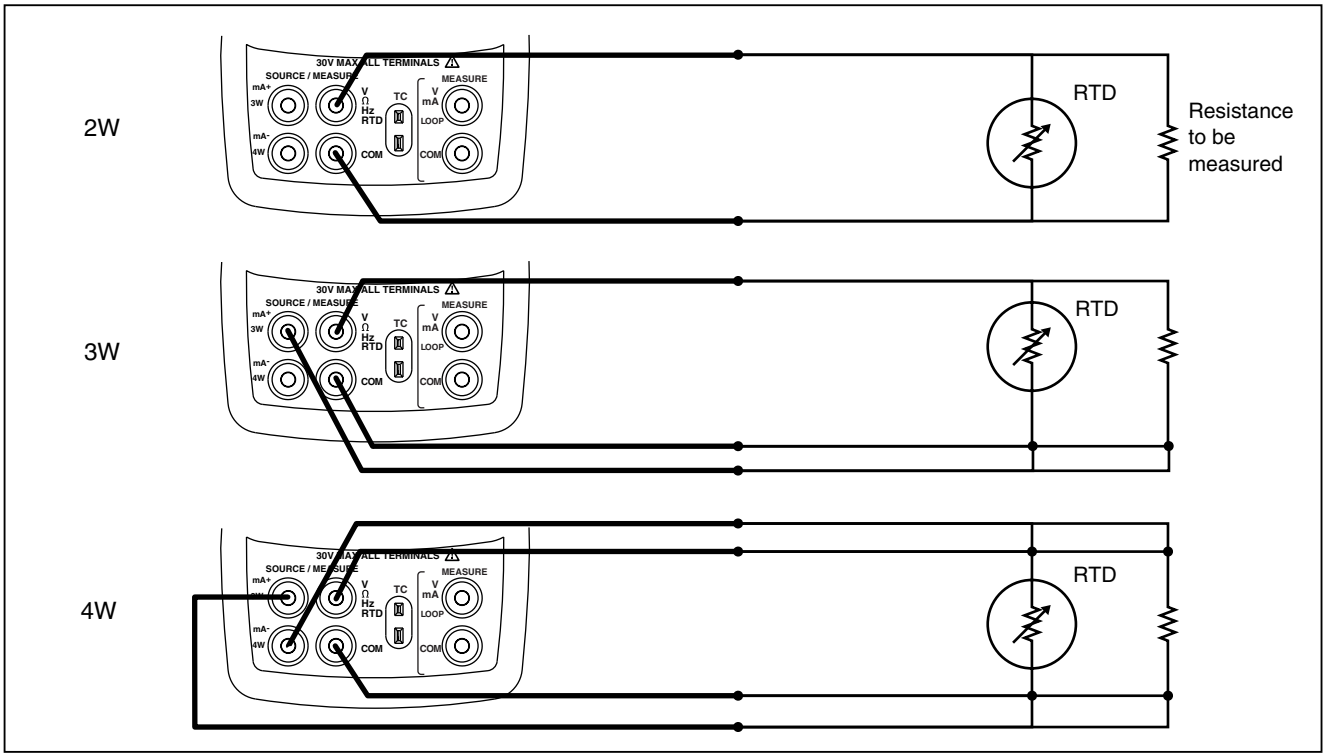

sh15f.eps

Figure 11. Measuring Temperature with an RTD, Measuring 2-, 3-, and 4-Wire Resistance

Measuring Pressure

Many ranges and types of pressure modules are available from Fluke. See “Accessories” near the back of this manual. Before you use a pressure module, read its instruction sheet. The modules vary in use, media, and accuracy.

Figure 12 shows the gage and differential modules. Differential modules also work in gage mode by leaving the low fitting open to atmosphere.

To measure pressure, attach the appropriate pressure module for the process pressure to be tested

Proceed as follows to measure pressure:

⚠ Warning

To avoid a violent release of pressure in a pressurized system, shut off the valve and slowly bleed off the pressure before you attach the pressure module to the pressure line.

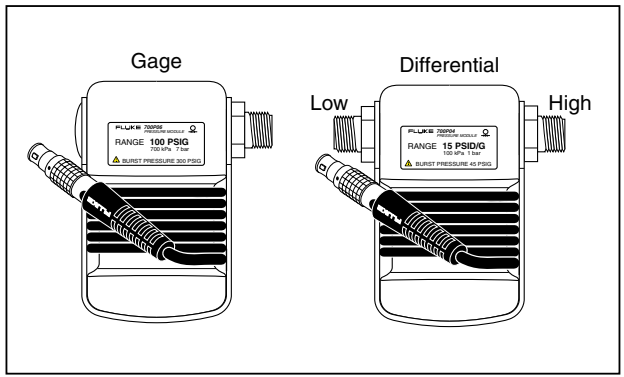

gj11f.eps

Figure 12. Gage and Differential Pressure Modules

Caution

To avoid mechanically damaging the pressure module, never apply more than 10 ft.-lb. (13.5 Nm) of torque between the pressure module fittings, or between the fittings and the body of the module. Always apply appropriate torque between the pressure module fitting and connecting fittings or adapters.

To avoid damaging the pressure module from overpressure, never apply pressure above the rated maximum printed on the pressure module.

To avoid damaging the pressure module from corrosion, use it only with specified materials. Refer to the printing on the pressure module or the pressure module instruction sheet for the acceptable material compatibility.

1. Connect a pressure module to the calibrator as shown in Figure 13. The threads on the pressure modules accept standard ¼ NPT pipe fittings. Use the supplied ¼ NPT to ¼ ISO adapter if necessary.

2. Press [ ]. The calibrator automatically senses which pressure module is attached and sets its range accordingly.

3. Zero the pressure module as described in the module's Instruction Sheet. Modules vary in zeroing procedures depending on module type, but all require pressing [ZERO].

   If desired, continue pressing [ ] to change pressure display units to psi, mmHg, inHg, cmH_2O@4 °C, cmH_2O@20 °C, inH_2O@4 °C, inH_2O@20 °C, mbar, bar, kg/cm^2, or kPa.

Zeroing with Absolute Pressure Modules

To zero, adjust the calibrator to read a known pressure. This can be barometric pressure, if it is accurately known, for all but the 700PA3 module. The maximum range of 700PA3 is 5 psi; therefore the reference pressure must be applied with a vacuum pump. An accurate pressure standard can also apply a pressure within range for any absolute pressure module. To adjust the calibrator reading, proceed as follows:

1. Press [ZERO], REF Adjust will appear to the right of the pressure reading.

2. Use ⌃ to increase or ⌄ to decrease the calibrator reading to equal the reference pressure.

3. Press [ZERO] again to exit zeroing procedure.

The calibrator stores and automatically reuses the zero offset correction for one absolute pressure module so that the module is not rezeroed every time you use it.

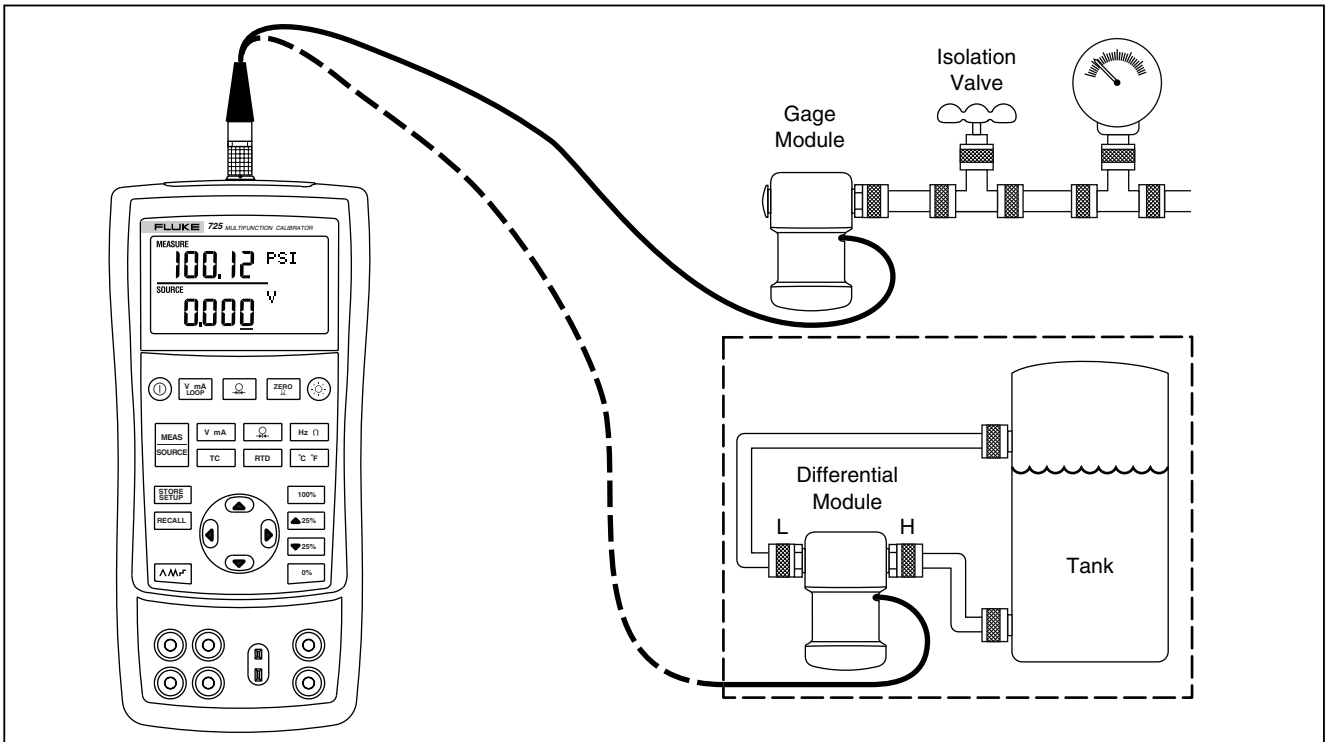

sh37f.eps

Figure 13. Connections for Measuring Pressure

Using Source Mode

In SOURCE mode, the calibrator generates calibrated signals for testing and calibrating process instruments; supplies voltages, currents, frequencies, and resistances; simulates the electrical output of RTD and thermocouple temperature sensors; and measures gas pressure from an external source, creating a calibrated pressure source.

Sourcing 4 to 20 mA

To select the current sourcing mode, proceed as follows:

1. Connect the test leads in the mA terminals (left column).
2. If necessary, press [MEAS SOURCE] for SOURCE mode.
3. Press [V mA] for current and enter the desired current you want by pressing ⌃ and ⌄ keys.

Simulating a 4- to 20-mA Transmitter

Simulate is a special mode of operation in which the calibrator is connected into a loop in place of a transmitter and supplies a known, settable test current. Proceed as follows:

1. Connect the 24 V loop power source as shown in Figure 14.
2. If necessary, press [MEAS SOURCE] for SOURCE mode.
3. Press [V mA] until both mA and SIM display.
4. Enter the desired current by pressing ⌃ and ⌄ keys.

Sourcing Other Electrical Parameters

Volts, ohms, and frequency are also sourced and shown in the lower display.

To select an electrical sourcing function, proceed as follows:

1. Connect the test leads as shown in Figure 15, depending on the source function.
2. If necessary, press [MEAS SOURCE] for SOURCE mode.
3. Press [V mA] for dc voltage, or [Hz Ω] for frequency or resistance.
4. Enter the desired output value by pressing ⌃ and ⌄ keys. Press ⟨ and ⟩ to select a different digit to change.

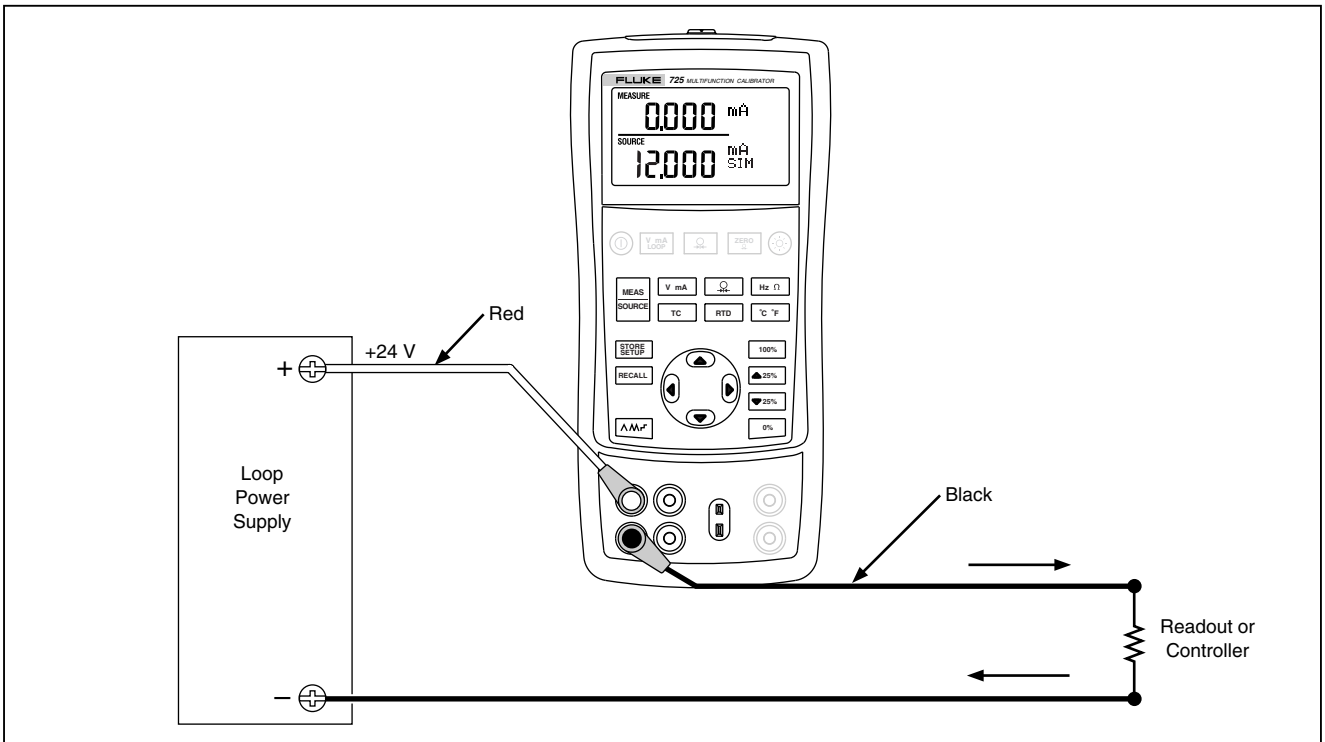

sh17f.eps

Figure 14. Connections for Simulating a 4- to 20-mA Transmitter

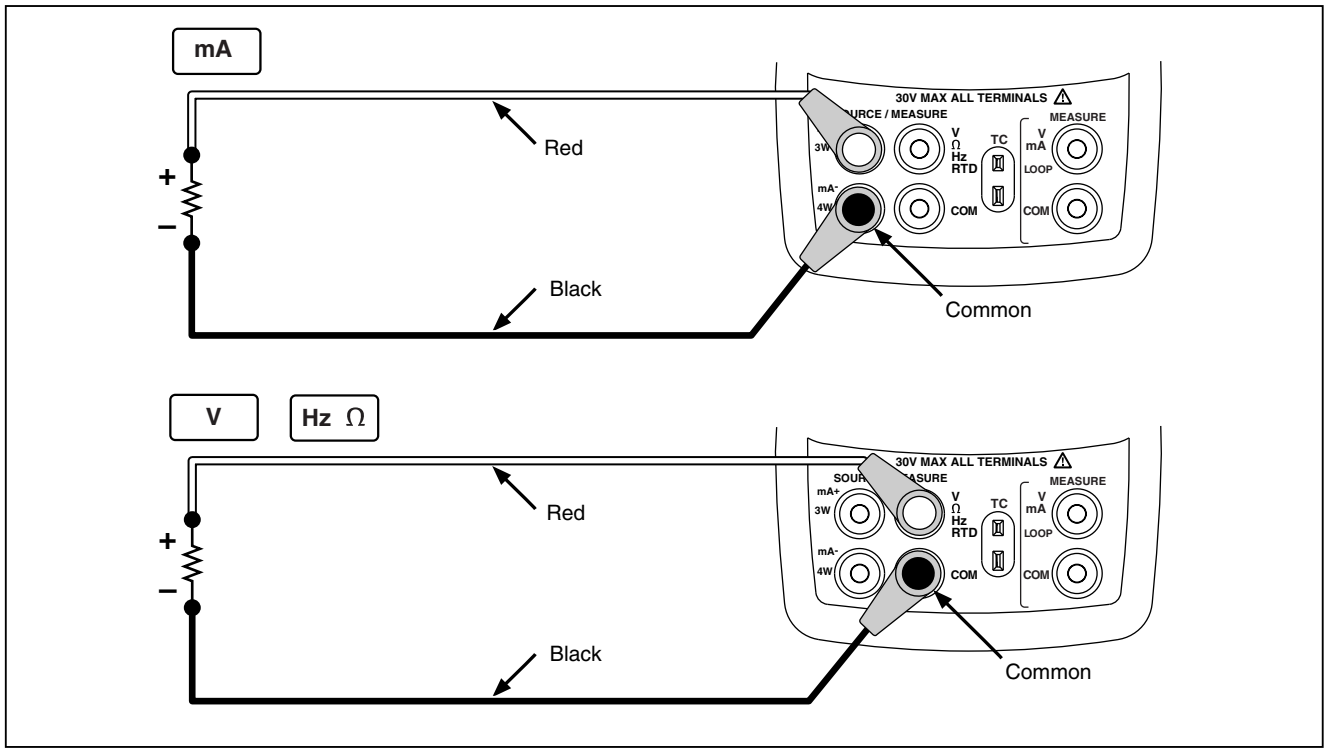

sh16f.eps

Figure 15. Electrical Sourcing Connections

Simulating Thermocouples

Connect the calibrator TC input/output to the instrument under test with thermocouple wire and the appropriate thermocouple mini-connector (polarized thermocouple plug with flat, in-line blades spaced 7.9 mm [0.312 in] center to center). *One pin is wider than the other. Do not try to force a miniplug in the wrong polarization*. Figure 16 shows this connection. Proceed as follows to simulate a thermocouple:

1. Attach the thermocouple leads to the appropriate TC miniplug, then to the TC input/output as shown in Figure 16.
2. If necessary, press [MEAS SOURCE] for SOURCE mode.
3. Press [TC] for the TC display. If desired, continue pressing this key to select the desired thermocouple type.
4. Enter the temperature you want by pressing ⌃ and ⌄ keys. Press ◀ and ▶ to select a different digit to edit.

Simulating RTDs

Connect the calibrator to the instrument under test as shown in Figure 17. Proceed as follows to simulate an RTD:

1. If necessary, press [MEAS SOURCE] for SOURCE mode.
2. Press [RTD] for the RTD display.

Note

Use the 3W and 4W terminals for measurement only, not for simulation. The calibrator simulates a 2-wire RTD at its front panel. To connect to a 3-wire or 4-wire transmitter, use the stacking cables to provide the extra wires. See Figure 17.

3. Enter the temperature you want by pressing ⌃ and ⌄ keys. Press ◀ and ▶ to select a different digit to edit.
4. If the 725 display indicates ExI HI, the excitation current from your device under test exceeds the limits of the 725.

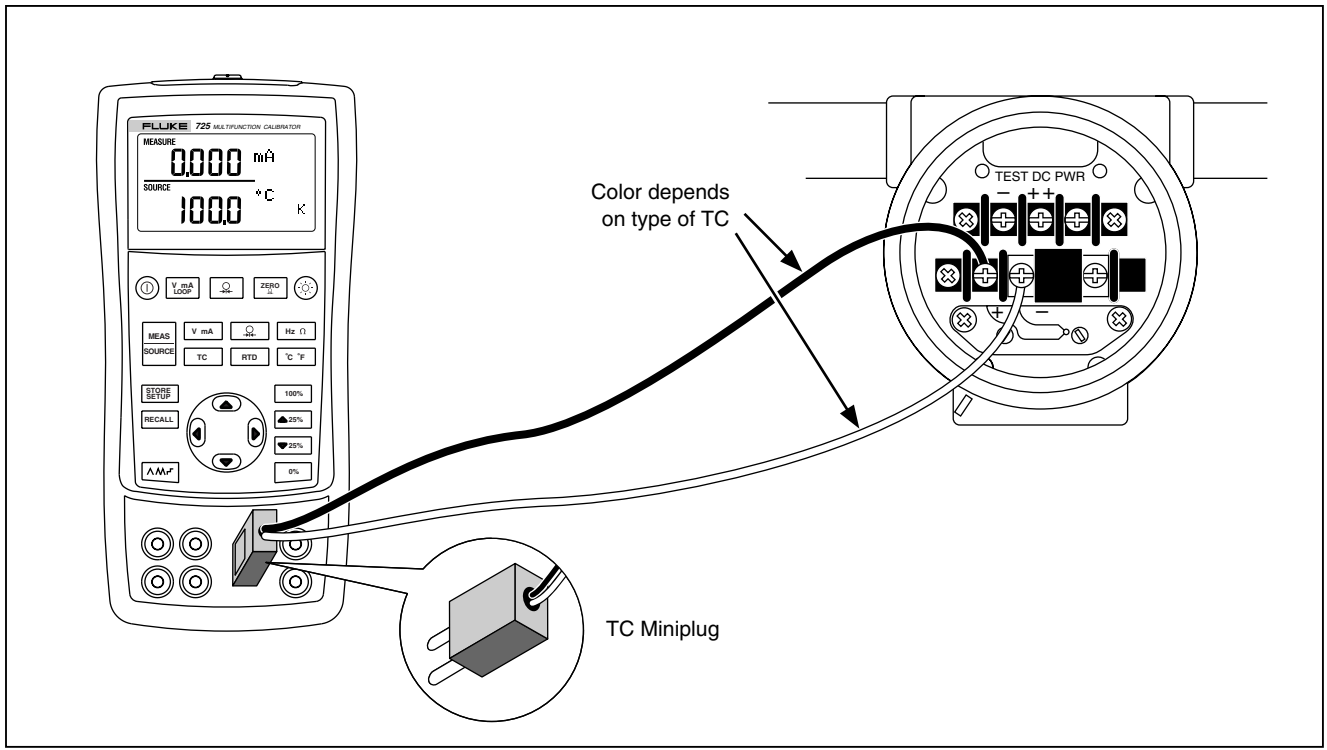

sh20f.eps

Figure 16. Connections for Simulating a Thermocouple

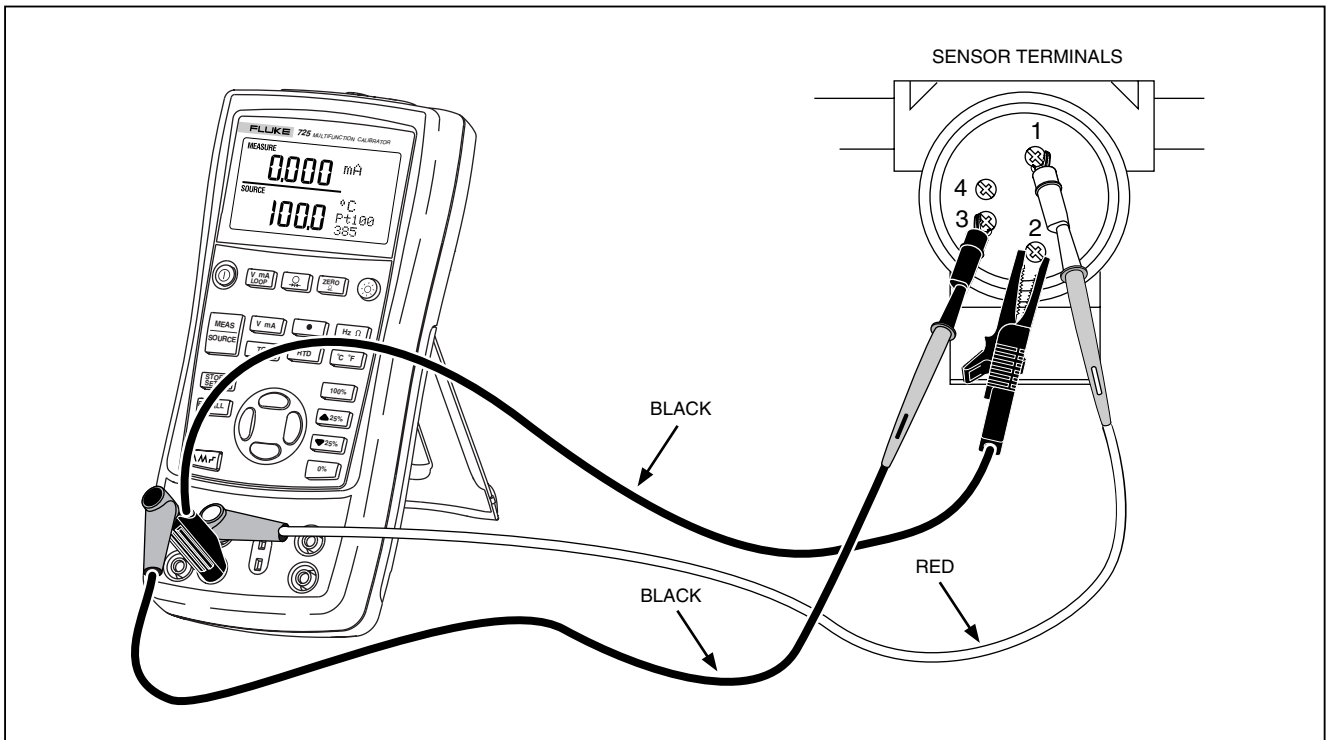

sh40f.eps

Figure 17. Connections for Simulating 3-Wire RTD

Sourcing Pressure

The calibrator sources pressure by measuring pressure supplied by a pump or other sources, and displaying the pressure in the SOURCE field. Figure 20 shows how to connect a pump to a Fluke pressure module which makes it a calibrated source.

Many ranges and types of pressure modules are available from Fluke. See “Accessories” near the back of this manual. Before you use a pressure module, read its Instruction Sheet. The modules vary in use, media, and accuracy.

Attach the appropriate pressure module for the process pressure to be tested.

Proceed as follows to source pressure:

⚠Warning

To avoid a violent release of pressure in a pressurized system, shut off the valve and slowly bleed off the pressure before you attach the pressure module to the pressure line.

Caution

To avoid mechanically damaging the pressure module, never apply more than 10 ft.-lb. (13.5 Nm) of torque between the pressure module fittings, or between the fittings and the body of the module. Always apply appropriate torque between the pressure module fitting and connecting fittings or adapters.

To avoid damaging the pressure module from overpressure, never apply pressure above the rated maximum printed on the pressure module.

To avoid damaging the pressure module from corrosion, use it only with specified materials. Refer to the printing on the pressure module or the pressure module instruction sheet for the acceptable material compatibility.

1. Connect a pressure module to the calibrator as shown in Figure 18. The threads on the pressure modules accept standard ¼ NPT pipe fittings. Use the supplied ¼ NPT to ¼ ISO adapter if necessary.

2. Press [Ω] (lower display). The calibrator automatically senses which pressure module is attached and sets its range accordingly.

3. Zero the pressure module as described in the module's Instruction Sheet. Modules vary in zeroing procedures depending on module type.

4. Pressurize the pressure line with the pressure source to the desired level as shown on the display.

   If desired, continue pressing [Ω] to change pressure display units to psi, mmHg, inHg, cmH_2O@4 °C, cmH_2O@20 °C, inH_2O@4 °C, inH_2O@20 °C, mbar, bar, kg/cm^2, or kPa.

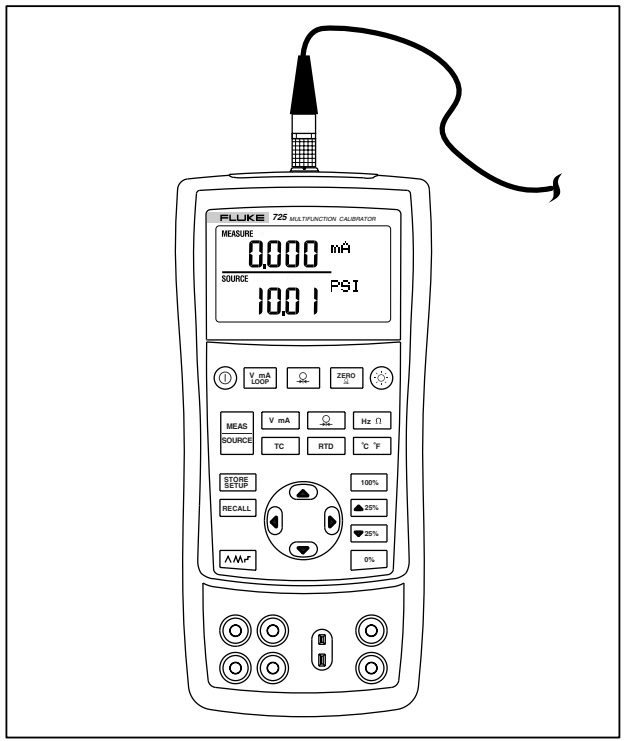

sh19f.eps

Figure 18. Connections for Sourcing Pressure

Setting 0 % and 100 % Output Parameters

For current output, the calibrator assumes that 0 % corresponds to 4 mA and 100 % corresponds to 20 mA. For other output parameters, you must set the 0 % and 100 % points before you can use the step and ramp functions. Proceed as follows:

1. If necessary, press [MEAS SOURCE] for SOURCE mode.
2. Select the desired source function and use the arrow keys to enter the value. Our example is temperature source using 100 °C and 300 °C values for source.
3. Enter 100 °C and press and hold [0%] to store the value.
4. Enter in 300 °C and press and hold [100%] to store the value.

You can now use this setting for the following:

- Manually stepping an output with 25 % increments.
- Jump between the 0 and 100 % span points by momentarily pushing [0%] or [100%].

Stepping and Ramping the Output

Two features are available for adjusting the value of source functions.

- Stepping the output manually with the [▲25%] and [▼25%] keys, or in automatic mode.
- Ramping the output.

Stepping and ramping apply to all functions except pressure, which requires that you use an external pressure source.

Manually Stepping the mA Output

To manually step current output you can do the following:

- Use [▲25%] or [▼25%] to step the current up or down in 25 % steps.
- Touch momentarily either [0%] to go to 0 %, or [100%] to go to 100 %.

Auto Ramping the Output

Auto ramping gives you the ability to continuously apply a varying stimulus from the calibrator to a transmitter, while your hands remain free to test the response of the transmitter.

When you press [∧M⌐], the calibrator produces a continuously repeating 0 % - 100 % - 0 % ramp in your choice of three ramp waveforms:

- ∧ 0 % - 100 % - 0 % 40-second smooth ramp
- M 0 % - 100 % - 0 % 15-second smooth ramp
- ⌐ 0 % - 100 % - 0 % Stair-step ramp in 25 % steps, pausing 5 seconds at each step. Steps are listed in Table 7.

To exit ramping, press any button.

Table 7. mA Step Values

Step	4 to 20 mA
0 %	4.000
25 %	8.000
50 %	12.000
75 %	16.000
100 %	20.000

Storing and Recalling Setups

You can store up to eight of your settings in a nonvolatile memory and recall the settings for later use. A low battery condition or a battery change does not jeopardize the stored settings. Proceed as follows:

1. After you create a calibrator setup, press [STORE SETUP]. In the display, the memory locations appear.
2. Press ◀ or ▶ to select locations one through eight. An underscore appears below the selected memory location.
3. Press [STORE SETUP], only the stored memory location will be displayed. The setup is stored.

To recall setups, proceed as follows.

1. Press [RECALL]. The memory locations appear on the display.
2. Press ◀ or ▶ to select the appropriate location and press [RECALL].

Calibrating a Transmitter

Use the measurement (upper display) and source (lower display) modes to calibrate a transmitter. This section applies to all but pressure transmitters. The following example shows how to calibrate a temperature transmitter.

Connect the calibrator to the instrument under test as shown in Figure 19. Proceed as follows to calibrate a transmitter

1. Press [V mA LOOP] for current (upper display). If required, press [V mA LOOP] again to activate loop power.
2. Press [TC] (lower display). If desired, continue pressing this key to select the desired thermocouple type.
3. If necessary, press [MEAS SOURCE] for SOURCE mode.
4. Set your zero and span parameters by pressing ⊕ and ⊖ keys. Enter these parameters by pressing and holding [0%] and [100%]. For more information on setting parameters, see “Setting 0 % and 100 %” earlier in this manual.
5. Perform test checks at 0-25-50-75-100 % points by pressing [▲25%] or [▼25%]. Adjust the transmitter as necessary.

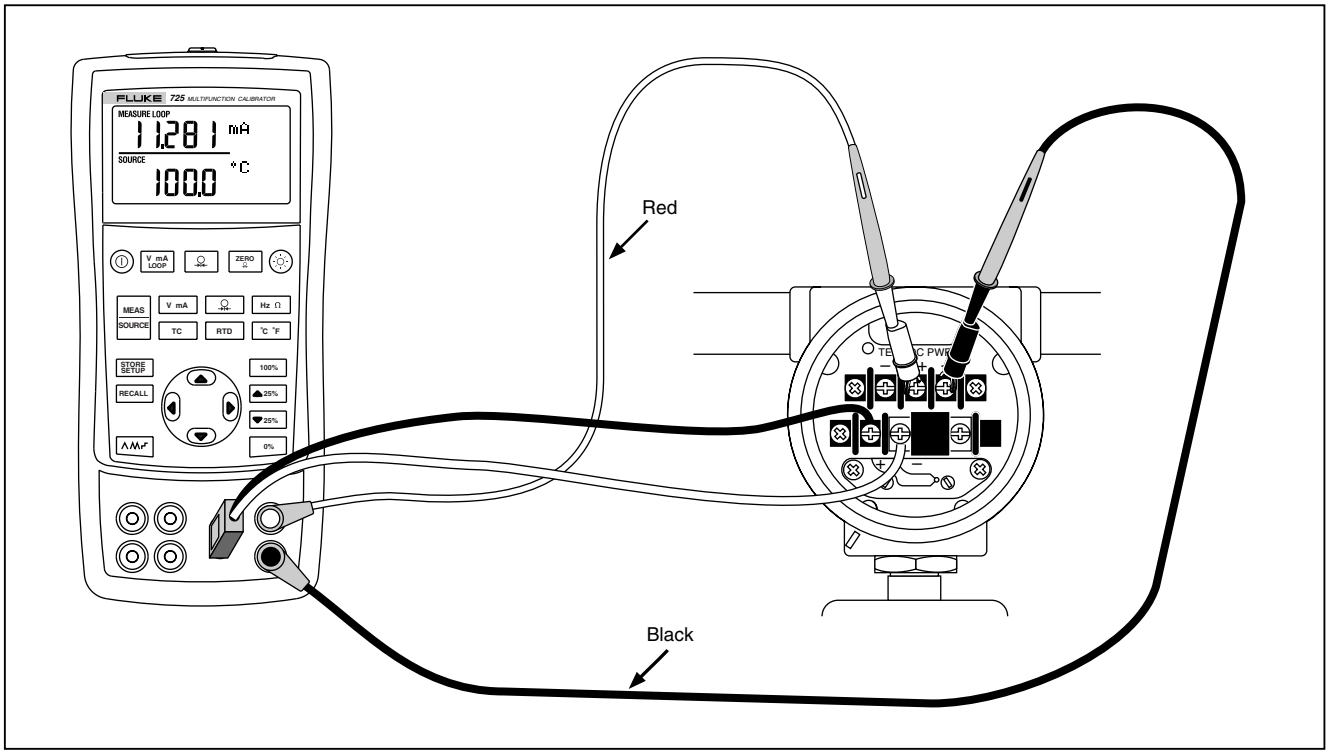

sh44f.eps

Figure 19. Calibrating a Thermocouple Transmitter

Calibrating a Pressure Transmitter

The following example shows how to calibrate a pressure transmitter.

Connect the calibrator to the instrument under test as shown in Figure 20. Proceed as follows:

1. Press [V mA LOOP] for current (upper display). If required, press [V mA LOOP] again to activate loop power.
2. Press [Ω] (lower display).
3. If necessary, press [MEAS SOURCE] for SOURCE mode.
4. Zero the pressure module.
5. Perform checks at 0 % and 100 % of span and adjust the transmitter as necessary.

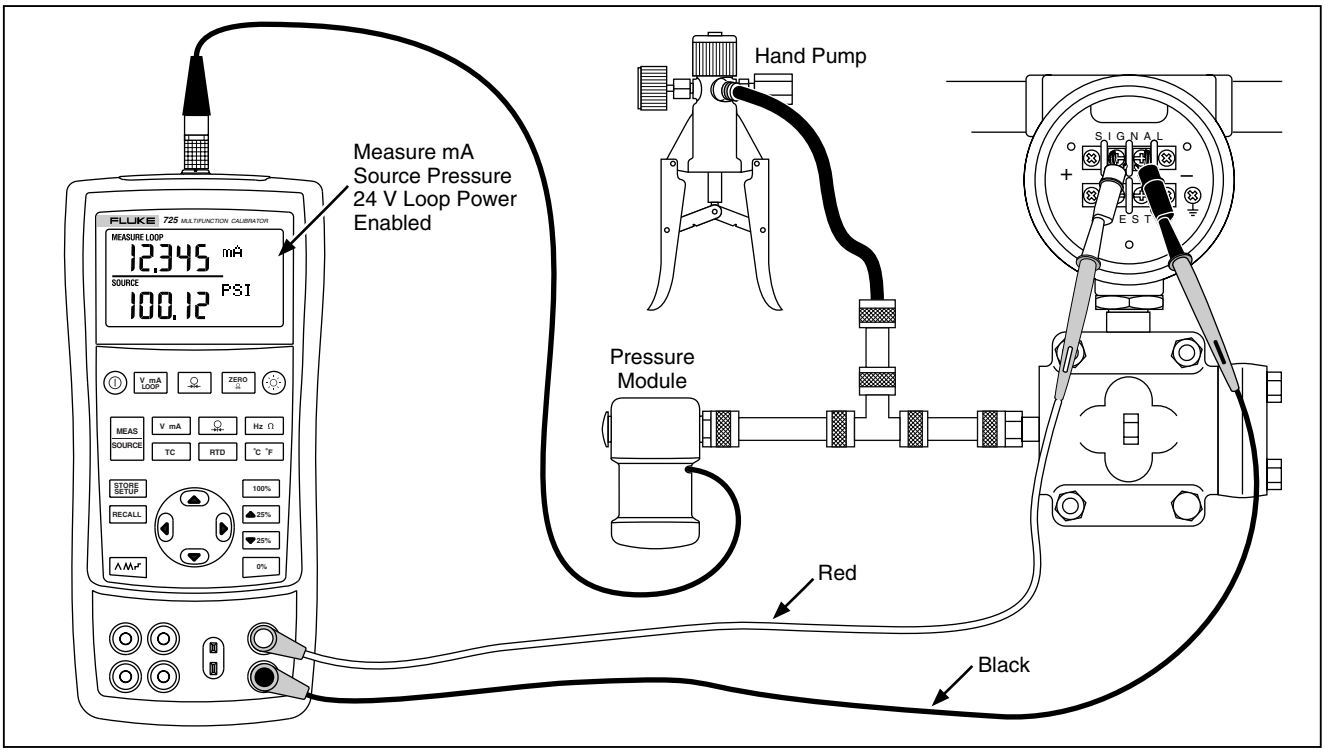

sh34f.eps

Figure 20. Calibrating a Pressure-to-Current (P/I) Transmitter

Calibrating an I/P Device

The following test allows you to calibrate a device that controls pressure. Proceed as follows:

1. Connect the test leads to the instrument under test as shown in Figure 21. The connections simulate a current-to-pressure transmitter and measures the corresponding output pressure.
2. Press [ ] (upper display).
3. Press [V mA] for sourcing current (lower display).
4. If necessary, press [MEAS SOURCE] for SOURCE mode.
5. Enter the desired current by pressing ⌃ and ⌄ keys. Press ◂ and ▸ to select different digits.

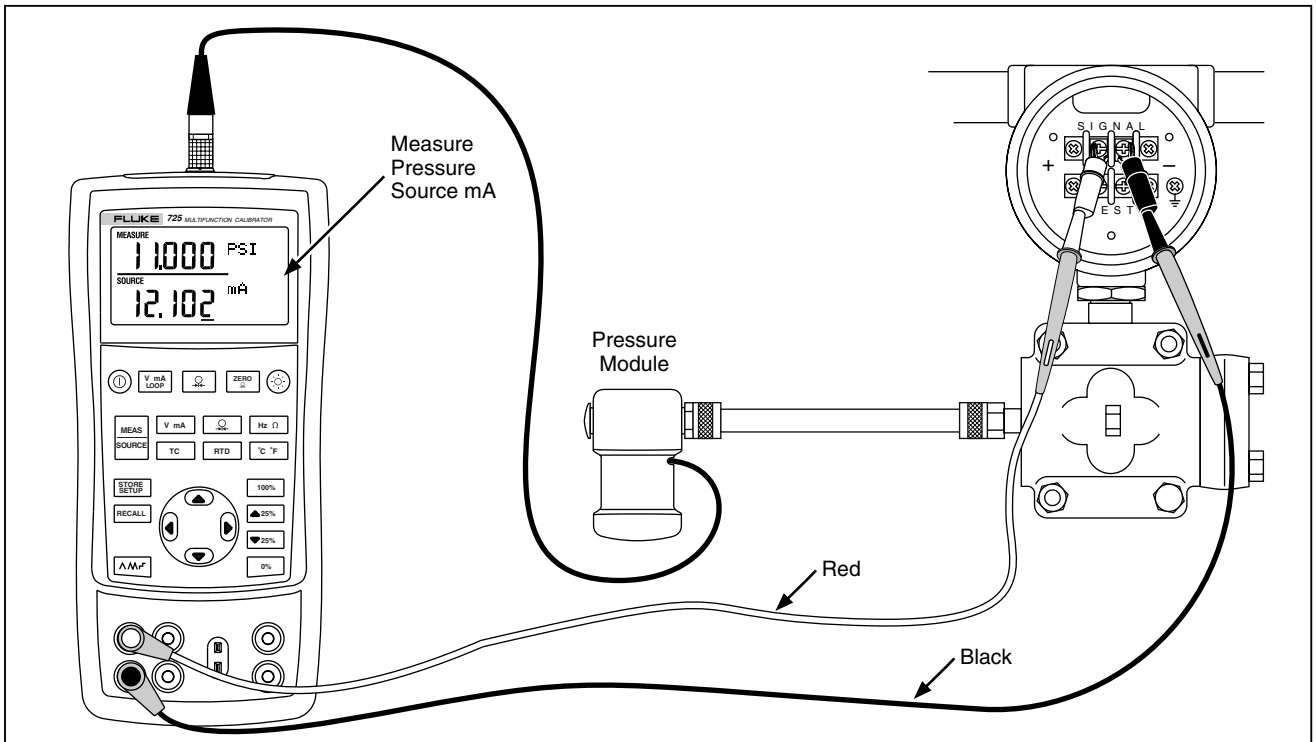

sh28f.eps

Figure 21. Calibrating a Current-to-Pressure (I/P) Transmitter

Testing an Output Device

Use the source functions to test and calibrate actuators, recording, and indicating devices. Proceed as follows:

1. Connect the test leads to the instrument under test as shown in Figure 22.
2. Press [V mA] for current or dc voltage, or [Hz Ω] for frequency or resistance (lower display).
3. If necessary, press [MEAS SOURCE] for SOURCE mode.

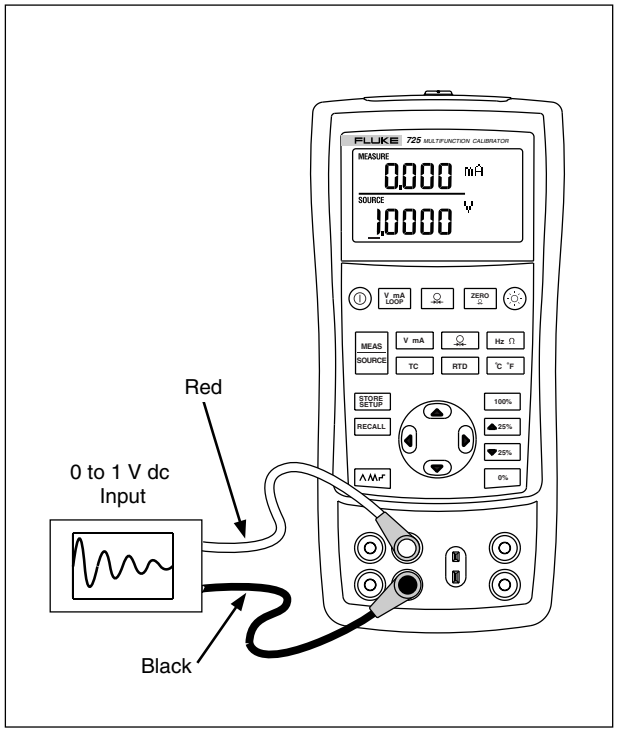

sh25f.eps

Figure 22. Calibrating a Chart Recorder

Remote Control Commands

You can control the calibrator remotely from a PC running a terminal emulator program. The remote control commands give access to all capabilities of the calibrator with the exception of pressure measurement. See Table 8A-8C for the remote commands and explanations.

The Fluke 700SC Serial Interface Cable Assembly (PN 667425) plugs into the pressure module connector and terminates in a DB-9 connector which plugs directly into a PC serial port. A DB-9 to DB-25 adapter is required to connect to a PC.

The remote control interface on the 725 is activated by turning the calibrator off, then turning it on again while depressing the MEAS SOURCE key. The calibrator will initialize with its remote port enabled. The terminal emulator connected to the calibrator should be set up for: 9600 baud, no parity, 8 data bits, and 1 stop bit.

Table 8A. Remote Control Upper Display

Serial Input	Description
j	mA measurement
L	mA Loop Power
E	Volts measurement
B	Single broadcast of most recent upper display value and units

Table 8B. Remote Control Lower Display

Serial Input	Description
A	mA measurement
a	mA source
I	mA 2W Sim
V	Volts measurement
v	Volts source
M	mV measurement
m	mV source
K	KHz measurement

Table 8B. Remote Control Lower Display (cont)

Serial Input	Description
k	KHz source
H	Hz measurement
h	Hz source
P	CPM measurement
p	CPM source
O	Ohms measurement (default 2W)
o	Select Ohms source
W	2-wire measurement (Ohms and RTDs)
X	3-wire measurement (Ohms and RTDs)
Y	4-wire measurement (Ohms and RTDs)
T	Thermocouple measurement (default Type J) use “S” command to select sensor type
t	Thermocouple source (default Type J) use “S” command to select sensor type
C	Selects Centigrade (T/C-RTD)
F	Selects Fahrenheit (T/C-RTD)
R	RTD measurement mode (default Pt100 385) use “S” command to select sensor type
r	RTD measurement mode (default Pt100 385) use “S” command to select sensor type
u	Increment display source value
d	Decrement display source value
<	The < arrow key PC keyboard selects left arrow on 725
>	The > arrow key PC keyboard selects right arrow on 725

Table 8B. Remote Control Lower Display (cont)

Serial Input	Description
0-9 -,. <CR>	Enter a source value using ascii characters 0,1,2,...9,-,.terminated by <CR> (carriage return)
b	Single Broadcast of most recent lower display value and units

Table 8C. "S" Commands Select Sensor Type

Serial Input	Selection Entry		RTD Type
	No.	Thermocouple Type	
S	1	J	Pt100 (3926)
	2	K	Pt100 (385)
	3	T	Pt100 (3916)
	4	E	Pt200 (385)
	5	R	Pt500 (385)
	6	S	Pt1000 (385)
	7	B	Ni120
	8	L	
	9	U	
	A	N	
	B	mV	

Replacing the Batteries

⚠Warning

To avoid false readings, which could lead to possible electric shock or personal injury, replace the batteries as soon as the battery indicator (▬) appears.

Figure 23 shows you how to replace the battery.

Replacing the Fuses

The calibrator comes equipped with two 0.05A, 250V, socketed fuses to protect the calibrator.

⚠Warning

To avoid electrical shock, remove the test leads from the calibrator before opening the battery door. Close and latch the battery door before using the calibrator.

The fuses can be removed and checked for resistance. A value of < 10 Ω is good. Problems while measuring using the right jacks indicate that F3 may have opened. If you can't measure or source current with the left jacks, F4 may have opened. To replace the fuses, refer to Figure 23 and perform the following steps:

1. Turn the calibrator off, remove the test leads from the terminals, and hold the calibrator face down.
2. Using a flat-blade screwdriver, turn the battery door screws 1/4-turn counterclockwise and remove the battery door.
3. Remove and replace the damaged fuse.
4. Replace the battery door and secure it by turning the screws 1/4-turn clockwise.

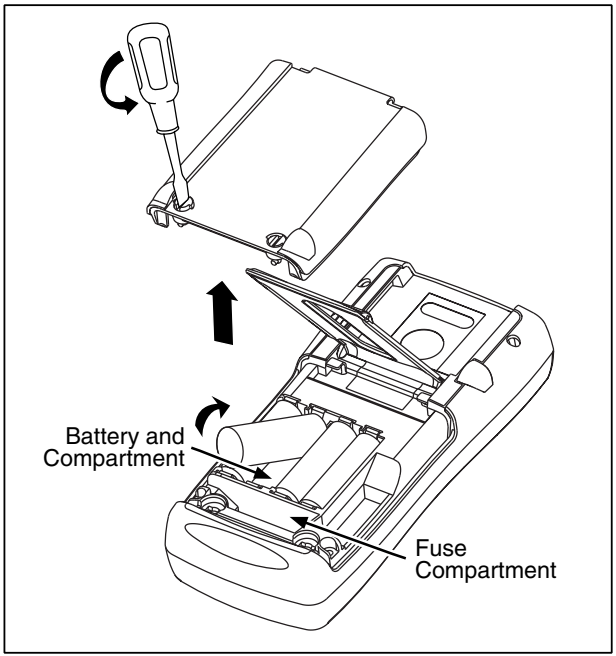

sh38f.eps

Figure 23. Replacing the Battteries

Maintenance

Cleaning the Calibrator

⚠ Warning

To avoid personal injury or damage to the calibrator, use only the specified replacement parts and do not allow water into the case.

Caution

To avoid damaging the plastic lens and case, do not use solvents or abrasive cleansers.

Clean the calibrator and pressure modules with a soft cloth dampened with water or water and mild soap.

Service Center Calibration or Repair

Calibration, repairs, or servicing not covered in this manual should be performed only by qualified service personnel. If the calibrator fails, check the batteries first, and replace them if needed.

Verify that the calibrator is being operated in accordance with the instructions in this manual. If the calibrator is faulty, send a description of the failure with the calibrator. Pressure modules do not need to accompany the calibrator unless the module is faulty also. Be sure to

pack the calibrator securely, using the original shipping container if it is available. Send the equipment postage paid and insured, to the nearest Service Center. Fluke assumes no responsibility for damage in transit.

The Fluke 725 calibrator covered by the warranty will be promptly repaired or replaced (at Fluke's option) and returned to you at no charge. See the back of the title page for warranty terms. If the warranty period has expired, the calibrator will be repaired and returned for a fixed fee. If the calibrator or pressure module is not covered under the warranty terms, contact an authorized service center for a price quote for repair.

To locate an authorized service center, refer to "Contacting Fluke" at the beginning of the manual.

Replacement Parts

Table 9 lists the part number of each replaceable part. Refer to Figure 24.

Table 9. Replacement Parts

Item	Description	PN	Qty.
1	Case top	664232	1
2	LCD mask	664273	1
3	Elastomeric strips	802063	2
4	Input/output bracket	691391	1
5	LCD bracket	667287	1
6	Mounting screws	494641	11
7	Backlight	690336	1
8	LCD	690963	1
9	Keypad	690955	1
10	Case bottom	664235	1
11	AA alkaline batteries	376756	4
12	Case screws	832246	4
13	Battery door	664250	1
14	Accessory mount	658424	1
15	Tilt stand	659026	1
16	Battery door 1/4-turn fasteners	948609	2
17	TL75 series test leads	855742	1
18	Test lead, red Test lead, black	688051 688066	1 1
19	*725 Product Overview Manual*	1549644	1
20	AC72 alligator clip, red AC72 alligator clip, black	1670641 1670652	1 1
21	CD ROM, contains User Manual	1549615	1
22	Input Decal	690948	1
23	Fuse 0.05A/250V	2002234	2

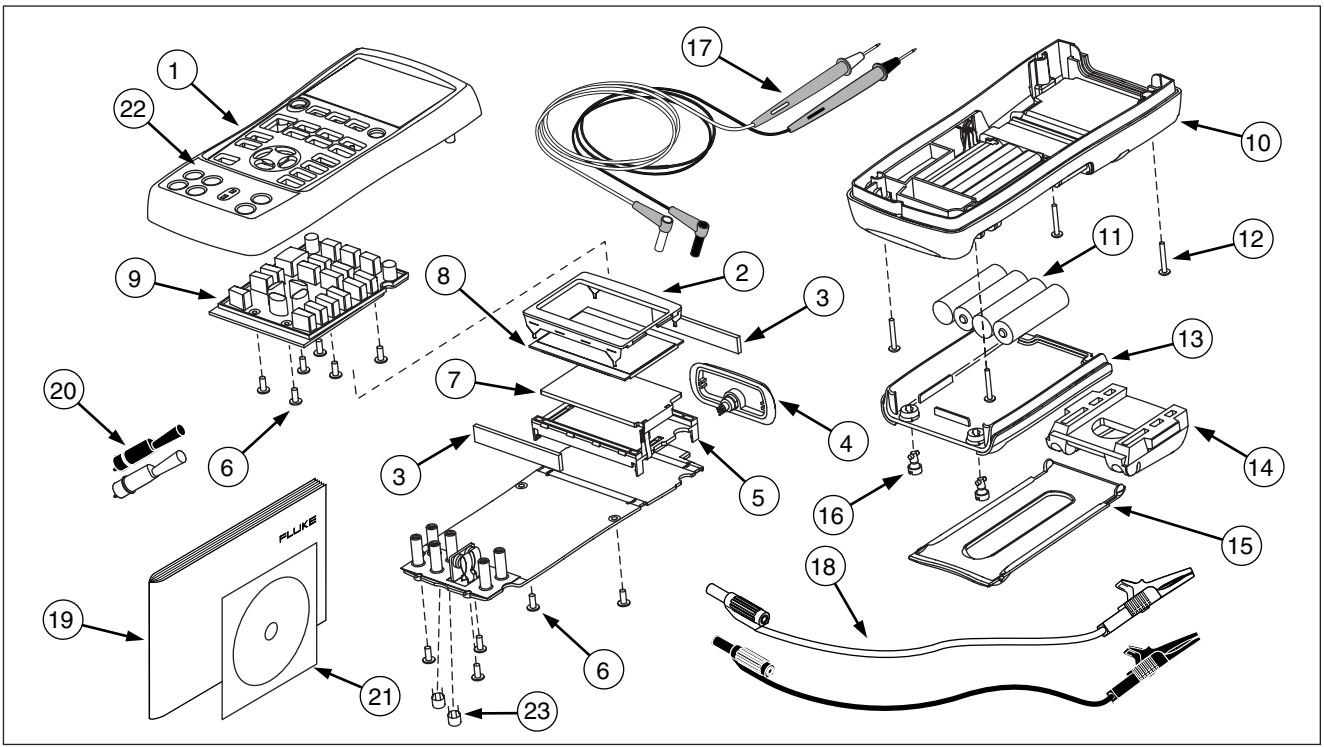

zi45f.eps

Figure 24. Replacement Parts

Accessories

For more information about these accessories and their prices, contact your Fluke representative. Pressure Modules and Fluke model numbers (see Table 10) are listed below. (Differential models also operate in gage mode.) Contact your Fluke representative about new pressure modules not listed here.

- 700HTP 0 to 10,000 PSI Pump
- 700PTP -11.6 to 360 PSI Pump
- 700TC1 and 700TC2 Thermocouple Mini-plug Kits

External Fluke Pressure Module Compatibility

The output of Fluke 700P pressure modules can cause the 725's 5 digit display to overflow, or else produce values that are too low to be read if inappropriate units are selected. This is prevented by displaying OL on the display per the following table.

Table 10. Fluke Pressure Module Compatibility

Pressure Unit	Module Compatibility
Psi	Available on all pressure ranges
In. H_20	All ranges through 3000 psi
cm. H_20	All ranges through 1000 psi
Bar	15 psi and above
Mbar	All ranges through 1000 psi
KPa	Available on all pressure ranges
In.Hg.	Available on all pressure ranges
mm. Hg	All ranges through 1000 psi
Kg/cm^2	15 psi and above

Table 11. Pressure Modules

Fluke Model Number	Range	Type and Media
Fluke-700P00	0 to 1” H_2O	differential, dry
Fluke-700P01	0 to 10” H_2O	differential, dry
Fluke-700P02	0 to 1 psi	differential, dry
Fluke-700P22	0 to 1 psi	differential, wet
Fluke-700P03	0 to 5 psi	differential, dry
Fluke-700P23	0 to 5 psi	differential, wet
Fluke-700P04	0 to 15 psi	differential, dry
Fluke-700P24	0 to 15 psi	differential, wet
Fluke-700P05	0 to 30 psi	gage, wet
Fluke-700P06	0 to 100 psi	gage, wet
Fluke-700P27	0 to 300 psi	gage, wet
Fluke-700P07	0 to 500 psi	gage, wet
Fluke-700P08	0 to 1,000 psi	gage, wet
Fluke-700P09	0 to 1,500 psi	gage, wet

Table 11. Pressure Modules (cont.)

Fluke Model Number	Range	Type and Media
Fluke-700P29	0 to 3,000 psi	gage, wet
Fluke-700P30	0 to 5,000 psi	gage, wet
Fluke-700P31	0 to 10,000 psi	gage, wet
Fluke-700PA3	0 to 5 psi	absolute, wet
Fluke-700PA4	0 to 15 psi	absolute, wet
Fluke-700PA5	0 to 30 psi	absolute, wet
Fluke-700PA6	0 to 100 psi	absolute, wet
Fluke-700PV3	0 to -5 psi	vacuum, dry
Fluke-700PV4	0 to -15 psi	vacuum, dry
Fluke-700PD2	±1 psi	dual range, dry
Fluke-700PD3	±5 psi	dual range, dry
Fluke-700PD4	±15 psi	dual range, dry
Fluke-700PD5	–15/+30 psi	dual range, wet
Fluke-700PD6	–15/+100 psi	dual range, wet
Fluke-700PD7	–15/+200 psi	dual range, wet

Specifications

Specifications are based on a one year calibration cycle and apply from +18 °C to +28 °C unless stated otherwise. All specifications assume a 5 minute warmup period.

DC Voltage Measurement

Range	Resolution	Accuracy, (% of Reading + Counts)
30 V (upper display)	0.001 V	0.02 % + 2
20 V (lower display)	0.001 V	0.02 % + 2
90 mV	0.01 mV	0.02 % + 2
Temperature coefficient -10 °C to 18 °C, +28 °C to 55 °C: ±0.005 % of range per °C		

DC Voltage Source

Range	Resolution	Accuracy, (% of Reading + Counts)
100 mV	0.01 mV	0.02 % + 2
10 V	0.001 V	0.02 % + 2
Temperature coefficient -10 °C to 18 °C, +28 °C to 55 °C: ±0.005 % of range per °C **Maximum load:** 1 mA		

Millivolt Measurement and Source*

Range	Resolution	Accuracy
-10 mV to 75 mV	0.01 mV	±(0.025 % + 1 count)
Maximum input voltage: 30 V **Temperature coefficient -10 °C to 18 °C, +28 °C to 55 °C:** ±0.005 % of range per °C *Select this function by pressing TC. The signal is available at the thermocouple miniplug connector.		

DC mA Measurement and Source

Range	Resolution	Accuracy, (% of Reading + Counts)
24 mA	0.001 mA	0.02 % + 2

Temperature coefficient -10 °C to 18 °C, +28 °C to 55 °C: ±0.005 % of range per °C

Drive capability: 1000 Ω at 20 mA

Ohms Measurement

Ohms Range	Accuracy ± Ω*	
	4-Wire	2- and 3-Wire
0 to 400 Ω	0.1	0.15
400 to 1.5 kΩ	0.5	1.0
1.5 to 3.2 kΩ	1	1.5

Temperature coefficient -10 °C to 18 °C, +28 °C to 55 °C: ±0.005 % of range per °C
Excitation Current: 0.2 mA
Maximum input voltage: 30 V
* 2-wire: Does not include lead resistance.
3-wire: Assumes matched leads with a total resistance not exceeding 100 Ω.

Ohms Source

Ohms Range	Excitation Current from Measurement Device	Accuracy ± Ω
15 to 400 Ω	0.15 to 0.5 mA	0.15
15 to 400 Ω	0.5 to 2 mA	0.1
400 to 1.5 kΩ	0.05 to 0.8 mA	0.5
1.5 to 3.2 kΩ	0.05 to 0.4 mA	1

Temperature coefficient -10 °C to 18 °C, +28 °C to 55 °C: ± 0.005 % of resistance range per °C

Resolution	
15 to 400 Ω	0.1 Ω
400 to 3.2 kΩ	1 Ω

Frequency Measurement

Range	Resolution	Accuracy
2.0 to 1000.0 CPM	0.1 CPM	± (0.05 % + 1 count)
1 to 1000 Hz	0.1 Hz	± (0.05 % + 1 count)
1.0 to 10.0 kHz	0.01 kHz	± (0.05 % + 1 count)

Sensitivity: 1V peak-to-peak minimum
Waveform: squarewave

Frequency Source

Range	Resolution	Accuracy (% of output frequency)
2.0 to 1000.0 CPM	0.1 CPM	± 0.05 %
1 to 1000 Hz	1 Hz	± 0.05 %
1.0 to 10.0 kHz	0.1 kHz	± 0.25 %
Waveform: 5 V p-p squarewave, -0.1 V offset		

Temperature, Thermocouples

Type	Range	Measure and Source Accuracies (ITS-90)
J	-200 to 0 °C 0 to 1200 °C	1.0 °C 0.7 °C
K	-200 to 0 °C 0 to 1370 °C	1.2 °C 0.8 °C
T	-200 to 0 °C 0 to 400 °C	1.2 °C 0.8 °C
E	-200 to 0 °C 0 to 950 °C	0.9 °C 0.7 °C
R	-20 to 0 °C 0 to 500 °C 500 to 1750 °C	2.5 °C 1.8 °C 1.4 °C
S	-20 to 0 °C 0 to 500 °C 500 to 1750 °C	2.5 °C 1.8 °C 1.5 °C
B	600 to 800 °C 800 to 1000 °C 1000 to 1800 °C	2.2 °C 1.8 °C 1.4 °C
L	-200 to 0 °C 0 to 900 °C	0.85 °C 0.7 °C
U	-200 to 0 °C 0 to 400 °C	1.1 °C 0.75 °C
N	-200 to 0 °C 0 to 1300 °C	1.5 °C 0.9 °C
XK	-200 to -100 °C -100 to 800 °C	0.5 °C 0.6 °C
BP	0 to 800 °C 800 to 2500 °C	1.2 °C 2.5 °C
Resolution: J, K, T, E, L, N, U, XK, BP: B, R, S:		0.1 °C, 0.1 °F 1 °C, 1 °F

Loop Power Supply

Voltage: 24 V

Maximum current: 22 mA

Short circuit protected

RTD Excitation (simulation)

Allowable Excitation by RTD type	
Ni 120	0.15 to 3.0 mA
Pt 100-385	0.15 to 3.0 mA
Pt 100-392	0.15 to 3.0 mA
Pt 100-JIS	0.15 to 3.0 mA
Pt 200-385	0.15 to 3.0 mA
Pt 500-385	0.05 to 0.80 mA
Pt 1000-385	0.05 to 0.40 mA

Temperature, RTD Ranges, and Accuracies (ITS-90)

Type	Range °C	Accuracy		
		Measure 4-Wire °C	Measure 2- and 3-Wire* °C	Source °C
Ni120	-80 to 260	0.2	0.3	0.2
Pt100-385	- 200 to 800	0.33	0.5	0.33
Pt100-392	-200 to 630	0.3	0.5	0.3
Pt100-JIS	-200 to 630	0.3	0.5	0.3
Pt200-385	-200 to 250 250 to 630	0.2 0.8	0.3 1.6	0.2 0.8
Pt500-385	-200 to 500 500 to 630	0.3 0.4	0.6 0.9	0.3 0.4
Pt1000-385	-200 to 100 100 to 630	0.2 0.2	0.4 0.5	0.2 0.2

Resolution: 0.1 °C, 0.1 °F
Allowable excitation current (source): Ni120, Pt100-385, Pt100-392, Pt100-JIS, Pt200-385: 0.15 to 3.0 mA
Pt500-385: 0.05 to 0.80 mA; Pt1000-385: 0.05 to 0.40 mA
RTD Source: Addresses pulsed transmitters and PLCs with pulses as short as 5 ms.
* 2-wire: Does not include lead resistance.
3-wire: Assumes matched leads with a total resistance not exceeding 100 Ω.

Pressure Measurement

Range	Resolution	Accuracy	Units
Determined by pressure module	5 digits	Determined by pressure module	psi, inH_2O@4 °C, inH_2O@20 °C, kPa, cmH_2O@4 °C, cmH_2O@20 °C, bar, mbar, kg/cm$_2$, mmHg, inHg

General Specifications

Operating temperature	-10 °C to 55 °C
Storage temperature	- 20 °C to 71 °C
Operating altitude	3000 meters above mean sea level
Relative Humidity (% RH operating without condensation)	90 % (10 to 30 °C) 75 % (30 to 40 °C) 45 % (40 to 50 °C) 35 % (50 to 55 °C) uncontrolled < 10 °C
Vibration	Random, 2 g, 5 to 500 Hz
Safety	EN 61010-1:1993, ANSI/ISA S82.01-1994; CAN/CSA C22.2 No 1010.1:1992
Power requirements	4 AA alkaline batteries
Size	96 x 200 x 47 mm. (3.75 x 7.9 x 1.86 in)
Weight	650 gm (1 lb, 7 oz)

Index

—0—

0% output parameter, setting, 36

—1—

100% output parameter, setting, 36

—4—

4 to 20 mA transmitter
  simulating, 28

—A—

Accessories, 52
Auto ramping output, 37

—B—

Battery, replacing, 48

—C—

Calibration, 49
Cleaning calibrator, 49
Connections
  for pressure measurement, 25
  for pressure sourcing, 35

—D—

Display, 13

—E—

Electrical parameters
  measurement, 18
  sourcing, 28

—G—

Getting started, 14

—I—

I/P device, calibrating, 42
Input terminals, 8
Input/output terminals and connectors
  (table), 9

—K—

Key functions (table), 11
Keys, 10

—L—

Loop power
  simulating, 28
  supplying, 16

—M—

Measure functions, summary (table), 2
Measure mode, 16
Measuring
  pressure, 25
  temperature with RTDs, 22
  temperature with thermocouples, 19

—O—

Output device, testing, 44
Output terminals, 8

—P—

Parts list, 50
Pressure modules available, 52
Pressure modules, zeroing, 26
Pressure transmitter, calibrating, 40

—R—

Recalling setups, 37
Remote control commands, 45
Repair, 49
RTD
  simulating, 31
RTD
  measuring, 22
  types, 22

—S—

Safety information, 3
Servicing, 49
Setup
  recalling, 37
  storing, 37
Thermocouple, 31
Simulating
  loop power, 28
  RTD, 31
  thermocouples, 31
Source functions, summary (table), 2
Source mode, 28
Sourcing
4 to 20 mA, 28
electrical parameters, 28
pressure, 34
thermocouples, 31
Specifications, 55
Standard equipment, 3
Stepping output, 36
Storing setups, 37

—T—

Temperature
measuring with RTD, 22
measuring with thermocouple, 19
Terminals
input, 8
output, 8
Thermocouple
measuring, 19
measuring temperature, 19
sourcing, 31
types, 19
Transmitter
4 to 20 mA, simulating, 28
Transmitter, calibrating, 38

—Z—

Zeroing pressure modules, 26