Safety Certified, CAS, Surface Mount X1/Y2 250 VAC, X2 250 VAC (Industrial Grade)

Electronic Components KEMET CHARGED.

Overview

KEMET's CAS surface mount safety certified capacitors are specifically designed for interference-suppression AC line filtering applications. When comparing to radial leaded disc capacitors, the CAS surface mount form factor provides engineers the ability to miniaturize their designs with a higher density solution. Having internationally recognized safety certifications, these capacitors are well-suited for applications that require keeping potentially disruptive or damaging line transients and EMI out of susceptible equipment. They are also an ideal solution when needing to suppress line disturbances at the source.

Safety Certified Capacitors are classified as either X and/or Y capacitors. Class X capacitors are primarily used in line-to line (across-the-line) applications. Should the capacitor fail in this application, there is no danger of electric shock to humans but could result in a risk of fire. The Class Y capacitor is primarily used in line-to-ground (line by-pass) applications. In this application, failure of the capacitor could lead to danger of electric shock.

With a working voltage of 250 VAC in line-to-line (Class X) and 250 VAC in line-to-ground (Class Y) applications, these safety capacitors meet the impulse test criteria outlined in IEC Standard 60384. Meeting subclass X1 and Y2 requirements, these devices are certified to withstand impulses up to 5 KV (X1/Y2) and 2.5 KV (X2) respectively.

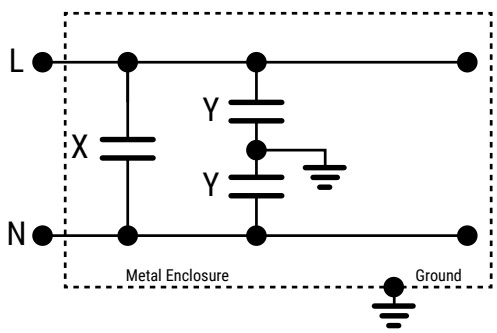

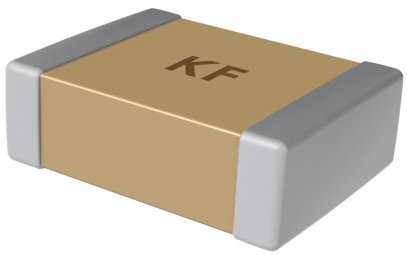

Click image above for interactive 3D content

Open PDF in Adobe Reader for full functionality

Benefits

- Safety Certified to IEC 60384-14
- Class X1/Y2, X2
- 250 VAC rating
- 2.5 kV and 5 kV Impulse Voltages
- Reliable operation up to 125°C
- Available in C0G and X7R Dielectrics
- Case sizes 1808, 1812, 2211, and 2220
- Capacitance offerings ranging from 3.0 pF to 22 nF
- Available capacitance tolerances from ±0.5 pF to ±20%
- RoHS compliant

Applications

Typical applications include:

- Line-to-line (Class X) filtering
- Line-to-ground (Class Y) filtering
- Antenna coupling
- Primary and secondary coupling (switching power supplies)
- Line disturbances suppression (motors and motor controls, relays, switching power supplies, and inverters)

© KEMET Electronics Corporation • KEMET Tower • One East Broward Boulevard
Fort Lauderdale, FL 33301 USA • 954-766-2800 • www.kemet.com

sales@prom-elec.com / ООО ПРОМЭЛЕКТРОНИКА

Ordering Information

CAS	17	C	471	K	A	G	F	C	
Type	Case Size (L"x W")	Specification/ Series	Capacitance Code (pF)	Capacitance Tolerance	AC Rated Voltage	Dielectric	Subclass Designation	Termination Finish	Packaging (Suffix/C-Spec)
CAS = AC Safety Rated	17 = 1808 18 = 1812 21 = 2220 26 = 2211	C	Two significant digits + number of zeros. Use 9 for 1.0 – 9.9 pF e.g., 2.2 pF = 229	D = ±0.5 pF F = ±1% G = ±2% J = ±5% K = ±10% M = ±20%	A = 250 VAC	G = C0G R = X7R	F = X1/Y2 G = X2	C = 100% Matte Sn	Blank = 7" Reel

Dimensions – Millimeters (Inches)

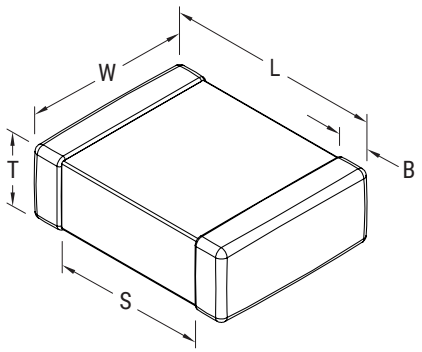

EIA Size Code	Metric Size Code	L Length	W Width	T Thickness	B Bandwidth	S Separation Minimum	Mounting Technique
1808	4520	4.50 (0.177) +0.5 (0.02)/−0.3 (0.12)	2.03 (0.080) ±0.25 (0.01)	See Table 2 for Thickness	0.50 (0.020) ±0.25 (0.010)	> 3.5 (0.138)	Solder Reflow Only
1812	4532	4.50 (0.177) +0.5 (0.02)/−0.3 (0.12)	3.20 (0.126) ±0.40 (0.016)		0.50 (0.020) ±0.25 (0.010)	> 3.5 (0.138)	
2211	5728	5.70 (0.224) ±0.40 (0.016)	2.8 (0.110) ±0.30 (0.012)		0.60 (0.024) ±0.30 (0.012)	> 4.0 (0.157)	
2220	5750	5.70 (0.224) ±0.40 (0.016)	5.0 (0.126) ±0.40 (0.016)		0.60 (0.024) ±0.30 (0.012)	> 4.0 (0.157)	

Qualification

Safety Standard	Specification	Subclass	Working Voltage	Certificate No.
TUV	IEC 60384–14	X1/Y2	250 VAC	R 50441101
		X2		R 50441118
UL CAN/CSA	UL 60384–14 and E60384–14	X1/Y2	250 VAC	E356389
		X2		

These devices are TUV/ENEC recognized for antenna coupling and AC line-to-line (Class X) and line-to-ground (Class Y) applications per IEC60384–14.

Environmental Compliance

These devices are RoHS compliant. They meet all requirements set forth by EU RoHS directives.

RoHS

Table 1A – Product Ordering Codes & Ratings – X1/Y2 C0G

Capacitance	Capacitance Code	Case Size						1808	1812	2211
		Class						X1/Y2		
		Peak Impulse Voltage						5,000 V		
		Capacitance Tolerance						Product Availability and Chip Thickness Codes See Table 2 for Chip Thickness Dimensions		
3.0 pF	309	D						AF		
3.3 pF	339	D						AF		
3.9 pF	399	D						AF		
4.0 pF	409	D						AF		CK
4.7 pF	479	D						AF		CK
5.0 pF	509	D						AF		CK
5.6 pF	569	D						AF		CK
6.0 pF	609	D						AF		CK
6.8 pF	689	D						AF		CK
7.0 pF	709	D						AF		CK
8.0 pF	809	D						AF		CK
8.2 pF	829	D						AF		CK
10 pF	100		F	G	J	K	M	AF	BD	CK
12 pF	120		F	G	J	K	M	AF	BD	CK
15 pF	150		F	G	J	K	M	AF	BD	CK
18 pF	180		F	G	J	K	M	AF	BD	CK
22 pF	220		F	G	J	K	M	AF	BD	CK
27 pF	270		F	G	J	K	M	AF	BD	CK
33 pF	220		F	G	J	K	M	AF	BD	CK
39 pF	390		F	G	J	K	M	AG	BD	CK
47 pF	470		F	G	J	K	M	AG	BD	CK
56 pF	560		F	G	J	K	M	AG	BD	CK
68 pF	680		F	G	J	K	M	AG	BD	CK
82 pF	820		F	G	J	K	M	AG	BD	CK
100 pF	101		F	G	J	K	M	AK	BD	CK
120 pF	121		F	G	J	K	M	AK	BD	CM
150 pF	151		F	G	J	K	M	AK	BD	CM
160 pF	161		F	G	J	K	M	AK	BD	CM
180 pF	181		F	G	J	K	M	AK	BD	CM
220 pF	221		F	G	J	K	M	AK	BK	CM
270 pF	271		F	G	J	K	M	AK	BK	CM
330 pF	331		F	G	J	K	M		BK	CM
390 pF	391		F	G	J	K	M		BK	CM
470 pF	471		F	G	J	K	M		BK	CM
560 pF	561		F	G	J	K	M			CM
680 pF	681		F	G	J	K	M			CM
720 pF	721		F	G	J	K	M			
820 pF	821		F	G	J	K	M			
1,000 pF	102		F	G	J	K	M			

Table 1B – Product Ordering Codes & Ratings – X1/Y2 X7R

Capacitance	Capacitance Code	Case Size			1808	1812	2211	2220
		Class			X1/Y2			
		Peak Impulse Voltage			5,000V			
		Capacitance Tolerance			Product Availability and Chip Thickness Codes See Table 2 for Chip Thickness Dimensions			
100 pF	101	J	K	M	AG			
120 pF	121	J	K	M	AG			
150 pF	151	J	K	M	AG	BG	CG	
180 pF	181	J	K	M	AG	BG	CG	DK
220 pF	221	J	K	M	AG	BG	CG	DK
270 pF	271	J	K	M	AK	BG	CG	DK
330 pF	331	J	K	M	AK	BG	CG	DK
390 pF	391	J	K	M	AK	BG	CG	DK
470 pF	471	J	K	M	AK	BG	CK	DK
560 pF	561	J	K	M	AK	BG	CK	DK
680 pF	681	J	K	M	AK	BK	CK	DK
820 pF	821	J	K	M	AK	BK	CK	DK
1,000 pF	102	J	K	M	AK	BM	CM	DK
1,200 pF	122	J	K	M			CM	DM
1,500 pF	152	J	K	M			CM	DM
1,800 pF	182	J	K	M			CM	DM
2,200 pF	222	J	K	M			CM	DM
2,700 pF	272	J	K	M				DM
3,300 pF	332	J	K	M				DM
3,900 pF	392	J	K	M				DM
4,700 pF	472	J	K	M				DM

Table 1C – Product Ordering Codes & Ratings – X2 C0G

Capacitance	Capacitance Code	Case Size						1808	1812
		Class						X2	
		Peak Impulse Voltage						2,500V	
		Capacitance Tolerance						Product Availability and Chip Thickness Codes See Table 2 for Chip Thickness Dimensions	
3.0 pF	309	D						AF	
4.0 pF	409	D						AF	
5.0 pF	509	D						AF	
6.0 pF	609	D						AF	
7.0 pF	709	D						AF	
8.0 pF	809	D						AF	
9.0 pF	909	D						AF	
10 pF	100		F	G	J	K	M	AF	BD
12 pF	120		F	G	J	K	M	AF	BD
15 pF	150		F	G	J	K	M	AF	BD
22 pF	220		F	G	J	K	M	AF	BD
27 pF	270		F	G	J	K	M	AF	BD
33 pF	330		F	G	J	K	M	AF	BD
39 pF	390		F	G	J	K	M	AG	BD
47 pF	470		F	G	J	K	M	AG	BD
56 pF	560		F	G	J	K	M	AG	BD
68 pF	680		F	G	J	K	M	AG	BD
82 pF	820		F	G	J	K	M	AG	BD
100 pF	101		F	G	J	K	M	AK	BD
120 pF	121		F	G	J	K	M	AK	BD
150 pF	151		F	G	J	K	M	AK	BD
180 pF	181		F	G	J	K	M	AK	BD
220 pF	221		F	G	J	K	M	AK	BD
270 pF	271		F	G	J	K	M	AK	BD
330 pF	331		F	G	J	K	M	AK	BD
390 pF	391		F	G	J	K	M	AK	BD
470 pF	471		F	G	J	K	M	AK	BD
560 pF	561		F	G	J	K	M	AK	BD
680 pF	681		F	G	J	K	M	AK	BK
820 pF	821		F	G	J	K	M	AK	BK
1,000 pF	102		F	G	J	K	M	AK	BK

Table 1D – Product Ordering Codes & Ratings – X2 X7R

Capacitance	Capacitance Code	Case Size			1808	1812	2220
		Class			X2		
		Peak Impulse Voltage			2,500V		
		Capacitance Tolerance			Product Availability and Chip Thickness Codes See Table 2 for Chip Thickness Dimensions		
150 pF	151	J	K	M	AG		
180 pF	181	J	K	M	AG		
220 pF	221	J	K	M	AG		
270 pF	271	J	K	M	AG	BG	
300 pF	301	J	K	M	AG	BG	
330 pF	331	J	K	M	AG	BG	
390 pF	391	J	K	M	AG	BG	
470 pF	471	J	K	M	AG	BG	
560 pF	561	J	K	M	AG	BG	
680 pF	681	J	K	M	AG	BG	
720 pF	721	J	K	M	AG	BG	
820 pF	821	J	K	M	AG	BG	
1,000 pF	102	J	K	M	AK	BG	
1,200 pF	122	J	K	M	AK	BG	
1,500 pF	152	J	K	M	AK	BK	
1,800 pF	182	J	K	M	AK	BK	
2,200 pF	222	J	K	M	AK	BM	
2,700 pF	272	J	K	M		BM	
3,300 pF	332	J	K	M		BM	
3,900 pF	392	J	K	M		BM	
4,700 pF	472	J	K	M		BM	
5,600 pF	562	J	K	M		BM	
0.010 uF	103	J	K	M			DM
0.012 uF	123	J	K	M			DM
0.015 uF	153	J	K	M			DM
0.018 uF	183	J	K	M			DM
0.022 uF	223	J	K	M			DU

Table 2 – Chip Thickness/Tape & Reel Packaging Quantities

Case Size	Thickness Code	Thickness Range (mm)	Plastic Quantity
1808	AF	1.40±0.15	2,000
	AG	1.60±0.20	2,000
	AK	2.00±0.20	1,000
1812	BD	1.25±0.10	1,000
	BG	1.60±0.20	1,000
	BK	2.00±0.20	1,000
	BM	2.50±0.30	500
2211	CG	1.60±0.20	1,000
	CK	2.00±0.20	1,000
	CM	2.50±0.30	500
	CU	2.80±0.30	500
2220	DK	2.00±0.20	1,000
	DM	2.50±0.30	500
	DU	2.80±0.30	500

Table 3 – Chip Capacitor Land Pattern Design Recommendations per IPC–7351

EIA Size Code	Metric Size Code	Density Level A: Maximum (Most) Land Protrusion (mm)					Density Level B: Median (Nominal) Land Protrusion (mm)					Density Level C: Minimum (Least) Land Protrusion (mm)				
		C	Y	X	V1	V2	C	Y	X	V1	V2	C	Y	X	V1	V2
1808	4520	2.30	1.75	2.30	7.40	3.30	2.20	1.55	2.20	6.50	2.70	2.10	1.35	2.10	5.80	2.40
1812	4532	2.15	1.60	3.60	6.90	4.60	2.05	1.40	3.50	6.00	4.00	1.95	1.20	3.40	5.30	3.70
2211	5728	2.81	1.70	3.21	7.30	3.40	2.76	1.60	3.11	7.10	3.50	2.71	1.50	3.01	6.90	3.30
2220	5650	2.75	1.70	5.50	8.20	6.50	2.65	1.50	5.40	7.30	5.90	2.55	1.30	5.30	6.60	5.60

Density Level A: *For low-density product applications. Recommended for wave solder applications and provides a wider process window for reflow solder processes.*
Density Level B: *For products with a moderate level of component density. Provides a robust solder attachment condition for reflow solder processes.*
Density Level C: *For high component density product applications. Before adapting the minimum land pattern variations the user should perform qualification testing based on the conditions outlined in IPC Standard 7351 (IPC–7351).*

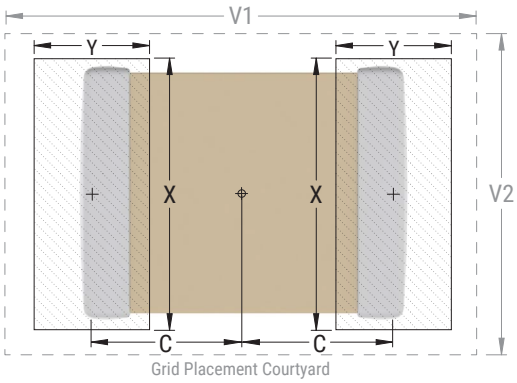

Soldering Process

Recommended Reflow Soldering Profile

KEMET's family of surface mount multilayer ceramic capacitors (SMD MLCCs) are compatible with wave (single or dual), convection, IR or vapor phase reflow techniques. Preheating of these components is recommended to avoid extreme thermal stress. KEMET's recommended profile conditions for convection and IR reflow reflect the profile conditions of the IPC/J–STD–020 standard for moisture sensitivity testing. These devices can safely withstand a maximum of three reflow passes at these conditions.

Profile Feature	Termination Finish
	100% Matte Sn
Preheat/Soak Temperature Minimum (T_{Smin}) Temperature Maximum (T_{Smax}) Time (t_S) from T_{Smin} to T_{Smax}	 150°C 200°C 60 – 120 seconds
Ramp-Up Rate (T_L to T_P)	3°C/second maximum
Liquidous Temperature (T_L)	217°C
Time Above Liquidous (t_L)	60 – 150 seconds
Peak Temperature (T_P)	260°C
Time Within 5°C of Maximum Peak Temperature (t_P)	30 seconds maximum
Ramp-Down Rate (T_P to T_L)	6°C/second maximum
Time 25°C to Peak Temperature	8 minutes maximum

Note: All temperatures refer to the center of the package, measured on the capacitor body surface that is facing up during assembly reflow.

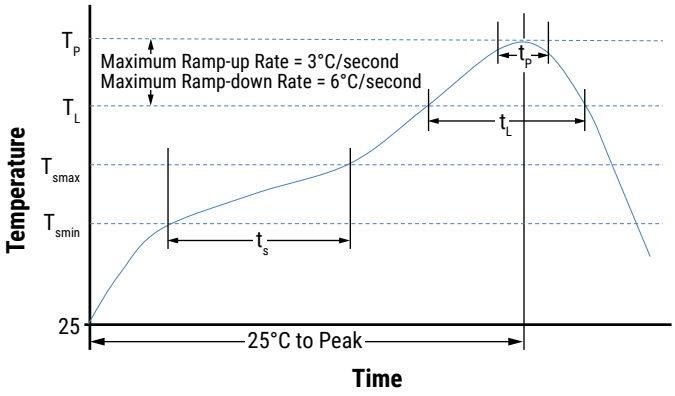

Table 4 – Performance & Reliability: Test Methods and Conditions

<table>
<tr><th>Item</th><th>Standard</th><th>Specification</th><th>Requirements</th></tr>
<tr><td>Visual examination and Dimensions</td><td>IEC 60384–1
4.1</td><td></td><td>No remarkable defect.
Dimensions to conform to individual specification sheet.</td></tr>
<tr><td>Capacitance</td><td>IEC 60384–1
4.2.2</td><td rowspan="2">Class I: C0G
Capacitance ≤ 1,000 pF, 1.0 ±0.2 V_{rms}, 1 MHz ±10%
Capacitance > 1,000 pF, 1.0 ±0.2 V_{rms}, 1 KHz ±10%
Class II: (X7R)
1.0 ±0.2 V_{rms}, 1 kHz ±10%</td><td>Capacitance is within specified tolerance</td></tr>
<tr><td>Dissipation Factor (DF) or Q</td><td>IEC 60384–1
4.2.3</td><td>
<table>
<tr><th>Dielectric</th><th>Q/DF</th><th>Requirement</th></tr>
<tr><td rowspan="2">C0G</td><td>Q ≥ 1,000</td><td>Cap ≥ 30 pF</td></tr>
<tr><td>Q ≥ 400 +20C[1]</td><td>Cap < 30 pF</td></tr>
<tr><td>X7R</td><td>D.F. < 2.5%</td><td></td></tr>
</table>
1. Example for 22 pF: Q ≥ 400 + (20 * 22) = 840
</td></tr>
<tr><td>Temperature Coefficient</td><td>IEC 60384–21/22
4.6</td><td>
<table>
<tr><th>Dielectric</th><th>Temperature Range</th></tr>
<tr><td>C0G</td><td rowspan="2">−55 to 125°C</td></tr>
<tr><td>X7R</td></tr>
</table>
</td><td>
<table>
<tr><th>Dielectric</th><th>Capacitance Change</th></tr>
<tr><td>C0G</td><td>±30 ppm/°C</td></tr>
<tr><td>X7R</td><td>±15%</td></tr>
</table>
</td></tr>
<tr><td>Dielectric Strength</td><td>IEC 60384–14
4.2.1</td><td>X Capacitor: 1,075 VDC (4.3 U_R)
Y Capacitor: 1,500 VAC
Duration = 60 Seconds
Charge current shall not exceed 50 mA
Voltage shall be raised from zero to test voltage at a rate not exceeding 150 V_{rms}/second</td><td>No evidence of flashover</td></tr>
<tr><td>Insulation Resistance</td><td>IEC 60384–21/22
4.5.3</td><td>500 V for 60 seconds
<50 mA charging current</td><td>
<table>
<tr><th>Dielectric</th><th>Insulation Resistance</th></tr>
<tr><td>C0G</td><td>1,000 megohm microfarads or 100 GΩ Whichever is smaller</td></tr>
<tr><td>X7R</td><td>500 megohm microfarads or 10 GΩ Whichever is smaller</td></tr>
</table>
</td></tr>
<tr><td>Solderability</td><td>IEC 60384-21/22
4.10</td><td>Solder temperature: 245±5°C
Dipping time: 2±0.2 seconds</td><td>75% minimum coverage of all metalized area</td></tr>
<tr><td>Resistance to Solder Heat</td><td>IEC 60384–14
4.4
IEC 60384–21/22
4.9</td><td>Solder temperature: 260 ±5°C
Dipping time: 10 ±1 second
Preheat 120°C – 150°C for 1 minute before immersing the capacitor in a eutectic solder.
For X7R capacitors, measurements can be made after keeping at room temperature for 24 ±2 hours</td><td>No visible damage.
<table>
<tr><th>Dielectric</th><th>IR</th><th>Capacitance Change</th></tr>
<tr><td>C0G</td><td rowspan="2">≥ 1 GΩ</td><td>Within ±2.5% or ±0.25 pF, whichever is larger.</td></tr>
<tr><td>X7R</td><td>±7.5%</td></tr>
</table>
</td></tr>
<tr><td>Temperature Cycling</td><td>IEC 60384–21/22
4.11</td><td>Five cycles
<table>
<tr><th>Step</th><th>Temp. (°C)</th><th>Time (min.)</th></tr>
<tr><td>1</td><td>−55°C</td><td>30 ±3</td></tr>
<tr><td>2</td><td>25°C</td><td>3</td></tr>
<tr><td>3</td><td>125°C</td><td>30 ±3</td></tr>
<tr><td>4</td><td>25°C</td><td>3</td></tr>
</table>
Measurements to be made after keeping at room temperature for 24 ±2 hours</td><td>
<table>
<tr><th>Dielectric</th><th>IR</th><th>Capacitance Change</th></tr>
<tr><td>C0G</td><td rowspan="2">Initial Limit</td><td>Within ±2.5% or ±0.25 pF, whichever is larger.</td></tr>
<tr><td>X7R</td><td>±7.5%</td></tr>
</table>
</td></tr>
<tr><td>Humidity (Damp Heat) Steady State</td><td>IEC 60384–14
4.12</td><td>Test temperature: 40±2°C
Humidity: 90 – 95% RH
Test time: 500 +24/−0 hours
Applied Voltage: 250 VAC
Measurement to be made after keeping at room temperature for 24±2 hours</td><td>
<table>
<tr><th>Dielectric</th><th>IR</th><th>Capacitance Change</th></tr>
<tr><td>C0G</td><td rowspan="2">25 megohm microfarads or 1 GΩ Whichever is smaller</td><td>Within ±3.0% or ±2 pF, whichever is larger.</td></tr>
<tr><td>X7R</td><td>±15%</td></tr>
</table>
</td></tr>
</table>

Table 4 – Performance & Reliability: Test Methods and Conditions cont.

<table>
<tr><th>Item</th><th>Standard</th><th>Specification</th><th>Requirements</th></tr>
<tr><td>Passive Flammability</td><td>IEC 60384–14
4.17
IEC 60384–1
4.38</td><td>Volume sample: 21.56 mm^3
Flame exposure time: 5 seconds maximum
Category of flammability: C</td><td>No evidence of burning</td></tr>
<tr><td>Active Flammability</td><td>IEC 60384–21/22
4.18</td><td>The capacitors applied V_R (250 VAC). Then each sample shall be subjected to 20 discharges from a tank capacitor, charge to a voltage that, when discharged, Ui 2,500 V for X2, Ui 5,000 V for X1/Y2 across the capacitor under test. The interval between successive discharges shall be 5 seconds.</td><td>The cheese cloth shall not burn with the flame.</td></tr>
<tr><td>Endurance</td><td>IEC 60384–14
4.14</td><td>Impulse Voltage:
Each capacitor shall be subjected to a Vp = 5.0 KV (X1/Y2 Class Impulse 5 KV) impulse for three times before applied to endurance test.
Test Temp: 125 ±3°C
Test time: 1, 000 +48/−0 hours
Applied Voltage:
X capacitor: 1.25 V_R (312.5 VAC)
Y capacitor: 1.70 V_R (425 VAC)
Once every hour the voltage shall be increased to 1, 000 V_{rms} for 0.1 second
Measurement to be made after keeping at room temperature for 24 ±2 hours</td><td>Appearance: No mechanical damage.
<table>
<tr><th>Dielectric</th><th>IR</th><th>Cap. Change</th><th>Q/DF</th></tr>
<tr><td>C0G</td><td rowspan="2">≥1 GΩ</td><td>Within ±5.0% or ±0.5 pF, whichever is larger.</td><td>≤ 2.5%</td></tr>
<tr><td>X7R</td><td>±20%</td><td>≤ 5%</td></tr>
</table></td></tr>
<tr><td>Resistance to Flexure of Substrate</td><td>IEC 60384–21/22
4.8</td><td>Capacitors mounted on substrate. The board shall be bent 1 mm with rate of 1 mm/second
 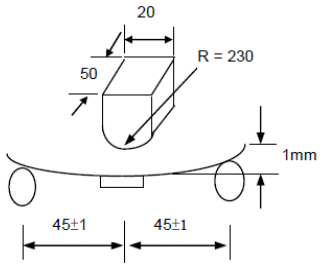
</td><td>
<table>
<tr><th>Dielectric</th><th>Capacitance Change</th></tr>
<tr><td>C0G</td><td>Within ±3.0% or ±2 pF, whichever is larger.</td></tr>
<tr><td>X7R</td><td>±12.5%</td></tr>
</table></td></tr>
<tr><td>Robustness of terminations (Adhesive Strength of Termination)</td><td>IEC 60384–21/22
4.15
IEC 60384–1
4.13</td><td>Capacitors mounted on a substrate. A force of 10 N applied perpendicular to the place of substrate and parallel the line joining the center of terminations for 10 ±1 second.
 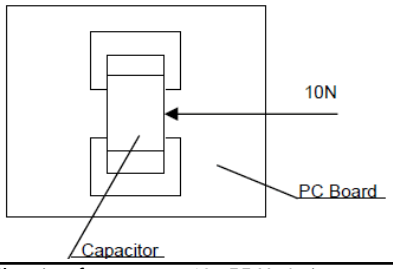
</td><td>No remarkable damage or removal of the terminations</td></tr>
<tr><td>Vibration</td><td>IEC 60384–14
4.17</td><td>• Vibration frequency : 10~55 Hz/minute
• Total amplitude : 1.5 mm
• Repeat the conditions for 2 hours each in 3 perpendicular directions</td><td>• No remarkable damage
• Capacitance change and Q/D.F.: To meet initial specification</td></tr>
<tr><td>Impulse Voltage</td><td>IEC 60384–14
4.13</td><td>X1: 4.0 KV, X2: 2.5 KV
Y2: 5.0 KV
Number of impulses: 24 maximum</td><td>There shall be no permanent breakdown or flashover.</td></tr>
</table>

Storage & Handling

Ceramic chip capacitors should be stored in normal working environments. While the chips themselves are quite robust in other environments, solderability will be degraded by exposure to high temperatures, high humidity, corrosive atmospheres, and long term storage. In addition, packaging materials will be degraded by high temperature– reels may soften or warp and tape peel force may increase. KEMET recommends that maximum storage temperature not exceed 40°C and maximum storage humidity not exceed 70% relative humidity. In addition, temperature fluctuations should be minimized to avoid condensation on the parts and atmospheres should be free of chlorine and sulfur bearing compounds. For optimized solderability chip stock should be used promptly, preferably within 6 months of receipt.

Construction

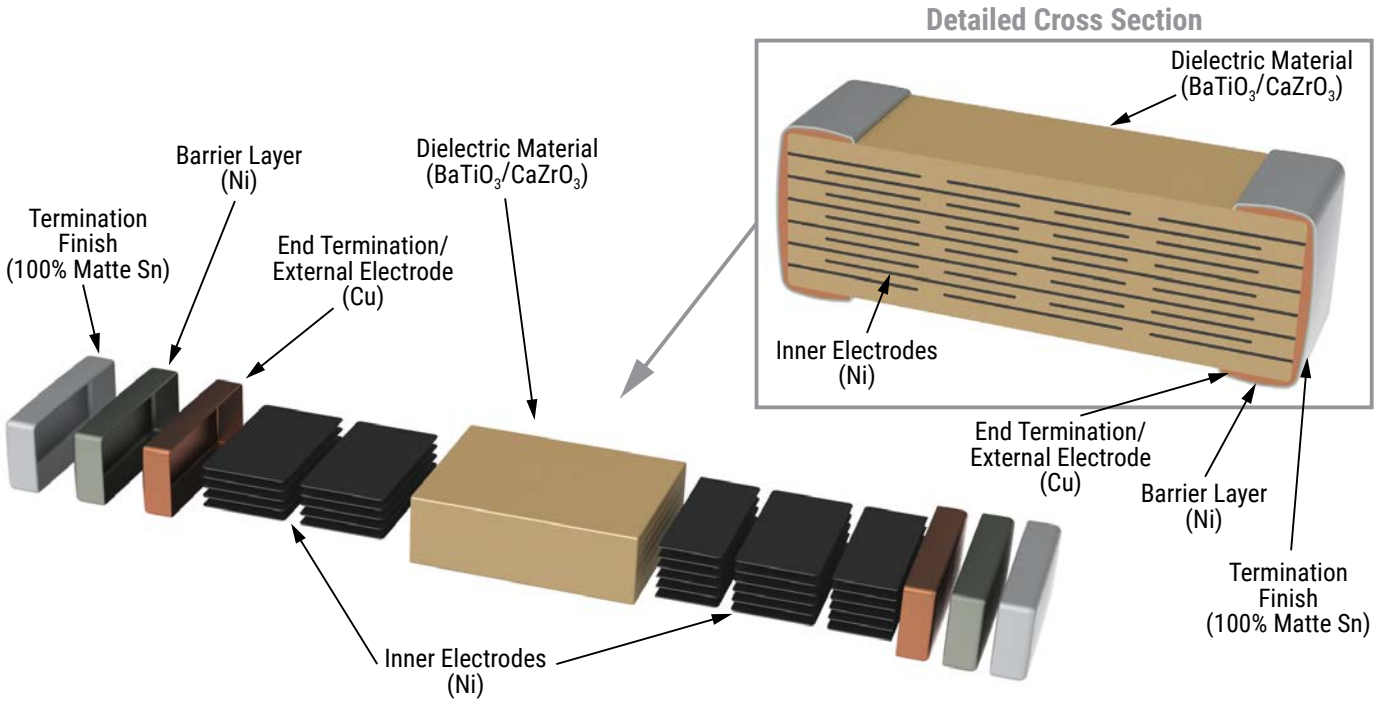

Marking

Subclass Designation	Marking
X1/Y2	KF
X2	KG

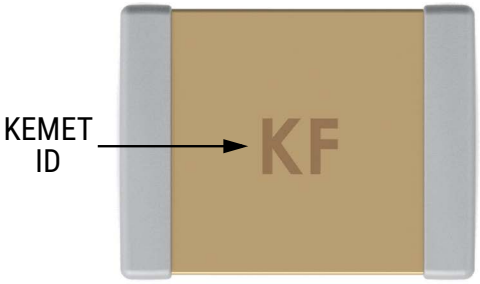

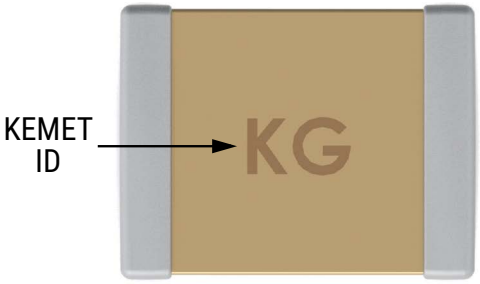

Tape & Reel Packaging Information

KEMET offers multilayer ceramic chip capacitors packaged in 8, 12, 16 and 24 mm tape on 7" and 13" reels in accordance with EIA Standard 481. This packaging system is compatible with all tape-fed automatic pick and place systems. See Table 2 for details on reeling quantities for commercial chips.

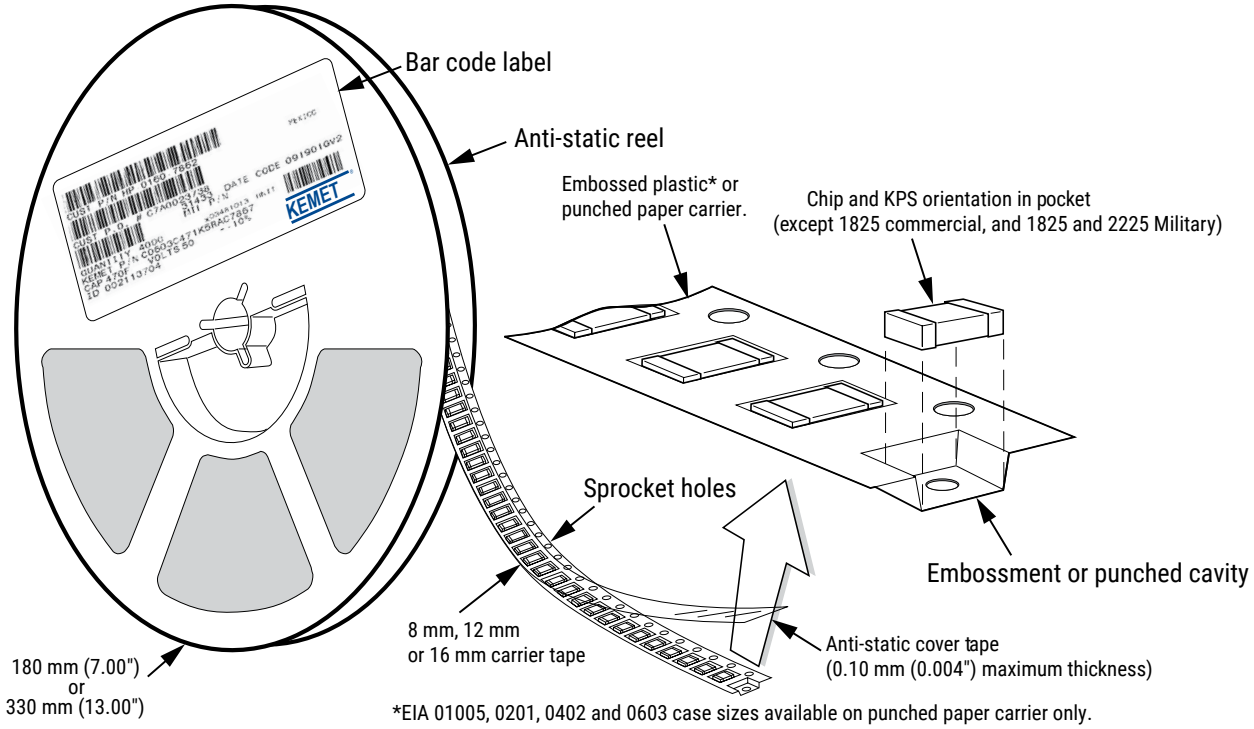

Table 5 – Carrier Tape Configuration, Embossed Plastic (mm)

EIA Case Size	Tape Size (W)*	Embossed Plastic
		7" Reel
		Pitch (P_1)*
1808	12	4
≥ 1812	12	8

**Refer to Figure 1 for W and P_1 carrier tape reference locations.*
**Refer to Tables 4 and 5 for tolerance specifications.*

Figure 1 – Embossed (Plastic) Carrier Tape Dimensions

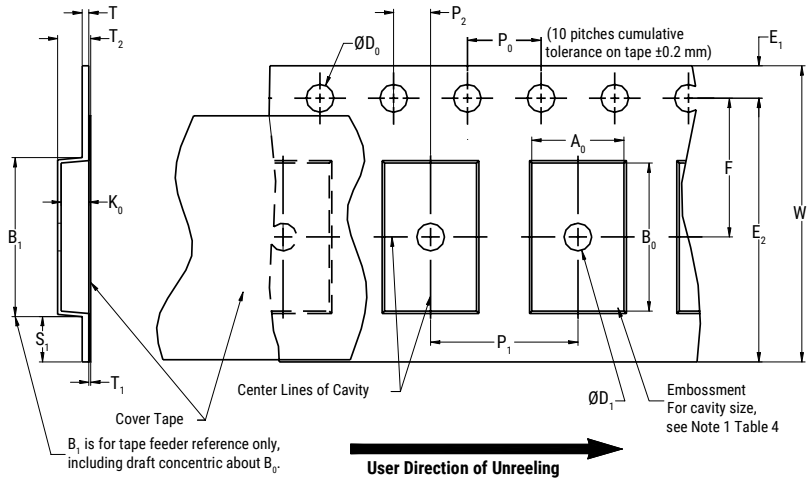

Table 6 – Embossed (Plastic) Carrier Tape Dimensions

Metric will govern

Constant Dimensions — Millimeters (Inches)									
Tape Size	D_0	D_1 Minimum Note 1	E_1	P_0	P_2	R Reference Note 2	S_1 Minimum Note 3	T Maximum	T1 Maximum
12 mm	1.5 +0.10/−0.0 (0.059 +0.004/−0.0)	1.5 (0.059)	1.75±0.10 (0.069±0.004)	4.0±0.10 (0.157±0.004)	2.0±0.05 (0.079±0.002)	30 (1.181)	0.600 (0.024)	0.600 (0.024)	0.100 (0.004)
Variable Dimensions — Millimeters (Inches)									
Tape Size	Pitch	B_1 Maximum Note 4	E_2 Minimum	F	T_2 Maximum	W Maximum	A_0,B_0, and K_0		
12 mm	Single (4 mm) and Double (8 mm)	8.2 (0.323)	10.25 (0.404)	5.5±0.05 (0.217±0.002)	4.6 (0.181)	12.3 (0.484)	Note 5		

1. The embossment hole location shall be measured from the sprocket hole controlling the location of the embossment. Dimensions of embossment location and hole location shall be applied independent of each other.
2. The tape with or without components shall pass around R without damage (see Figure 6).
3. If S_1 < 1.0 mm, there may not be enough area for cover tape to be properly applied (see EIA Document 481 paragraph 4.3 (b)).
4. B_1 dimension is a reference dimension for tape feeder clearance only.
5. The cavity defined by A_0, B_0, and K_0 shall surround the component with sufficient clearance that:
(a) the component does not protrude above the top surface of the carrier tape.
(b) the component can be removed from the cavity in a vertical direction without mechanical restriction, after the top cover tape has been removed.
(c) rotation of the component is limited to 20° maximum for 8 and 12 mm tapes and 10° maximum for 16 mm tapes (see Figure 3).
(d) lateral movement of the component is restricted to 0.5 mm maximum for 8 mm and 12 mm wide tape and to 1.0 mm maximum for 16 mm tape (see Figure 4)
(e) For KPS Series product, A0 and B0 are measured on a plane 0.3 mm above the bottom of the pocket.
(f) see Addendum in EIA Document 481 for standards relating to more precise taping requirements.

Packaging Information Performance Notes

1. Cover Tape Break Force: 1.0 kg minimum.
2. Cover Tape Peel Strength: The total peel strength of the cover tape from the carrier tape shall be:

Tape Width	Peel Strength
8 mm	0.1 to 1.0 Newton (10 to 100 gf)
12 and 16 mm	0.1 to 1.3 Newton (10 to 130 gf)
24 mm	0.1 to 1.6 Newton (10 to 160 gf)

The direction of the pull shall be opposite the direction of the carrier tape travel. The pull angle of the carrier tape shall be 165° to 180° from the plane of the carrier tape. During peeling, the carrier and/or cover tape shall be pulled at a velocity of 300±10 mm/minute.
3. Labeling: Bar code labeling (standard or custom) shall be on the side of the reel opposite the sprocket holes. *Refer to EIA Standards 556 and 624*.

Figure 2 – Maximum Component Rotation

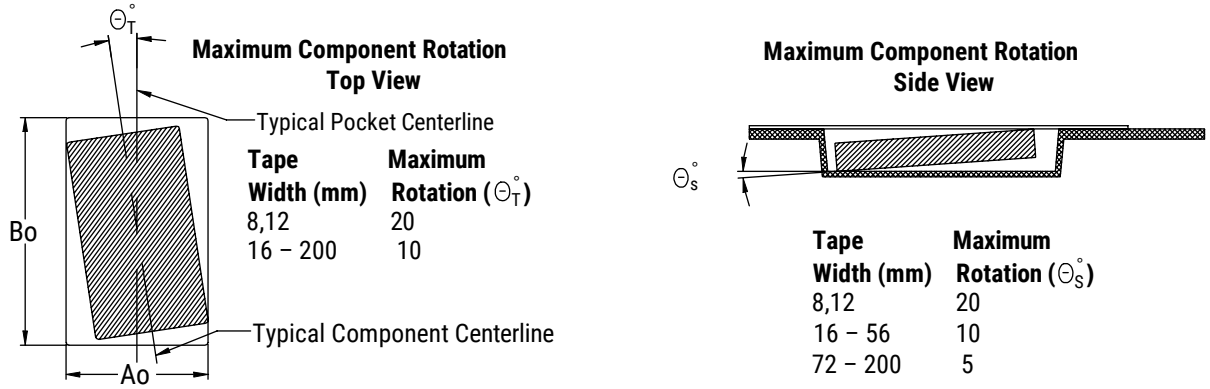

Figure 3 – Maximum Lateral Movement

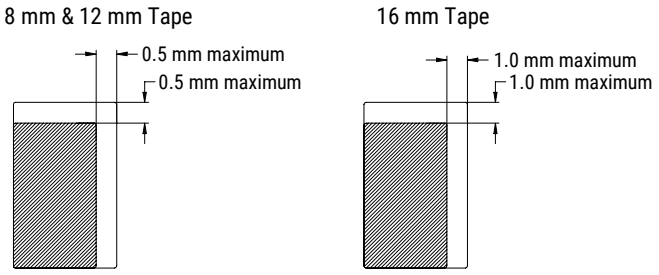

Figure 4 – Bending Radius

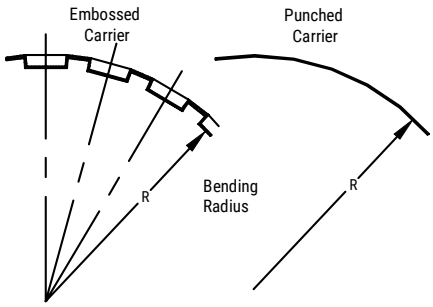

Figure 5 – Reel Dimensions

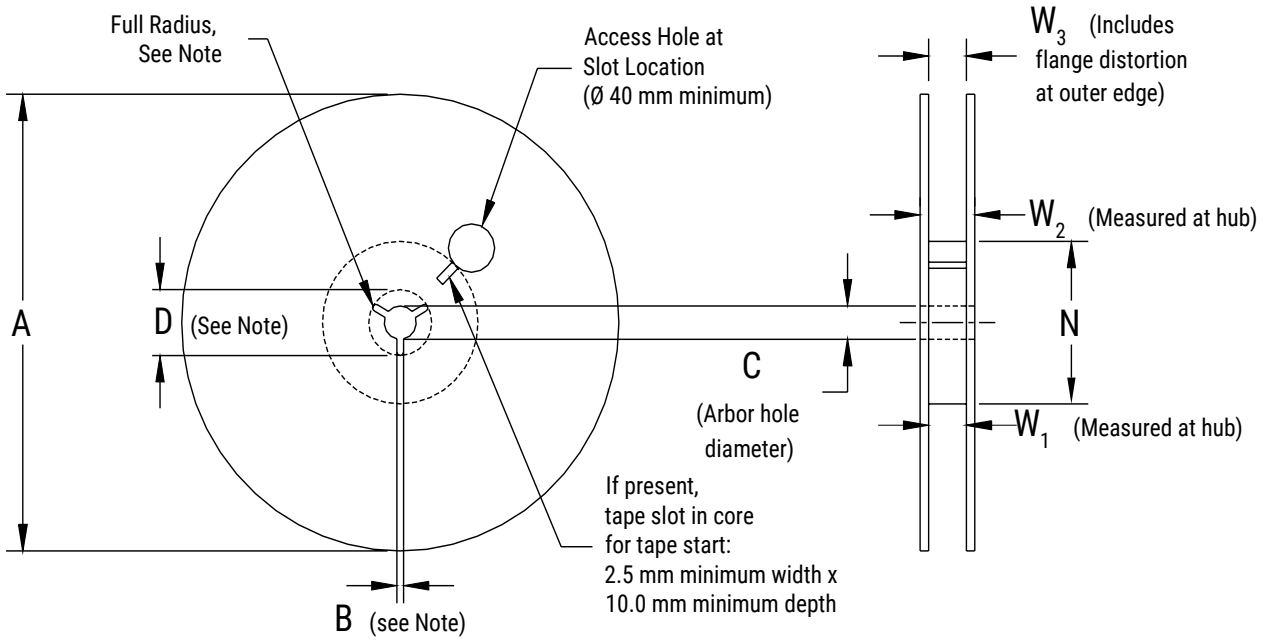

Note: Drive spokes optional; if used, dimensions B and D shall apply.

Table 7 – Reel Dimensions

Metric will govern

Constant Dimensions — Millimeters (Inches)				
Tape Size	A	B Minimum	C	D Minimum
12 mm	178±0.20 (7.008±0.008) or 330±0.20 (13.000±0.008)	1.5 (0.059)	13.0 +0.5/−0.2 (0.521 +0.02/−0.008)	20.2 (0.795)
Variable Dimensions — Millimeters (Inches)				
Tape Size	N Minimum See Note 2, Tables 2–3	W_1	W_2 Maximum	W_3
12 mm	50 (1.969)	12.4 +2.0/−0.0 (0.488 +0.078/−0.0)	18.4 (0.724)	Shall accommodate tape width without interference

KEMET Electronics Corporation Sales Offices

For a complete list of our global sales offices, please visit www.kemet.com/sales.

Disclaimer

All product specifications, statements, information and data (collectively, the "Information") in this datasheet are subject to change. The customer is responsible for checking and verifying the extent to which the Information contained in this publication is applicable to an order at the time the order is placed. All Information given herein is believed to be accurate and reliable, but it is presented without guarantee, warranty, or responsibility of any kind, expressed or implied.

Statements of suitability for certain applications are based on KEMET Electronics Corporation's ("KEMET") knowledge of typical operating conditions for such applications, but are not intended to constitute – and KEMET specifically disclaims – any warranty concerning suitability for a specific customer application or use. The Information is intended for use only by customers who have the requisite experience and capability to determine the correct products for their application. Any technical advice inferred from this Information or otherwise provided by KEMET with reference to the use of KEMET's products is given gratis, and KEMET assumes no obligation or liability for the advice given or results obtained.

Although KEMET designs and manufactures its products to the most stringent quality and safety standards, given the current state of the art, isolated component failures may still occur. Accordingly, customer applications which require a high degree of reliability or safety should employ suitable designs or other safeguards (such as installation of protective circuitry or redundancies) in order to ensure that the failure of an electrical component does not result in a risk of personal injury or property damage.

Although all product–related warnings, cautions and notes must be observed, the customer should not assume that all safety measures are indicted or that other measures may not be required.

KEMET is a registered trademark of KEMET Electronics Corporation.