Specification
规格书

Customer name : _____
客户名称

Customer P/N : _____
客户品号

Refond P/N : **RF-W2S118TS-A51**
公司型号

Sending Date:_____
供货日期

☐Technical Reference 技术参考			☐Sample 样品		■Mass Product 量产供货
Client approval			Refond approval		
客户审核			瑞丰审核		
Approval 核准	Audit 确认	Confirmation 制作	Approval 核准	Audit 确认	Confirmation 制作
☐Qualified 接受	☐Disqualified 不接受		Date : 日期:		

Address: 1-8th Floor, Building #1,10th Industrial Zone, Tian Liao Community, Gong Ming Area, Guang Ming New District, Shenzhen, China.
地址： 深圳市光明新区公明办事处田寮社区第十工业区 1 栋一至八楼
Tel/电话：0755-66839118 Fax/传真： 0755-66839300 Web/网址： www.refond.com

注：1. This specification is written both in English and in Chinese and the latter is formal.此规格书以中英文方式书写，若有冲突以中文版本为准.

2. Both the customers and Refond will agree on official specifications of supplied products before a customer's volume production. The specification is valid only after be signed. And Refond reserves the right to further modify the specification for technical reference and sample without noticing the customers 在量产供货前，瑞丰需与客户签署一份正式的产品规格书并各自备份。规格书签核后方有效，对于作为技术参考以及送样时提供的规格书，瑞丰保留进一步修改而不需通知客户的权力。

3. Consult Refond's sales staff in advance for information on the applications in which exceptional quality and reliability are required. 如产品需要用在有特殊质量要求及可靠性要求的地方，请提前咨询瑞丰的销售人员以取得相关信息。

4. The customer shall not disassemble or analyse the LEDs without having consent from Refond. When defective LEDs are found, the customer shall inform Refond in writing directly before disassembling or analysis.在取得瑞丰的同意前，客户不应该对产品进行拆解分析，如发现失效产品，请直接书面通知瑞丰。

深圳瑞丰光电子股份有限公司 承认专用章

Confidential

sales@prom-elec.com / ООО ПРОМЭЛЕКТРОНИКА

RF-W2S118TS-A51

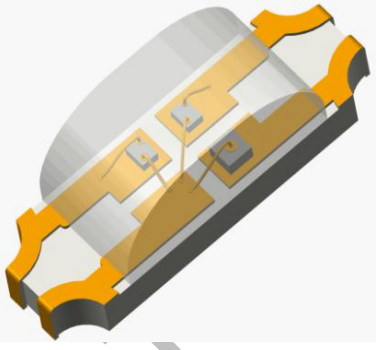

Features 特征

- Extremely wide viewing angle.发光角度大
- Suitable for all SMT assembly and solder process.适用于所有的SMT组装和焊接工艺
- Moisture sensitivity level: Level 3.防潮等级 Level 3
- Package:3000pcs/reel.包装每卷3000pcs
- RoHS compliant. 满足RoHS要求

Description 描述

- The Colour LED which was fabricated using blue ,green and yellow chip
  该产品为三色光LED，是由蓝光、绿光和黄光晶片封装形成

Applications 应用

- Optical indicator.光学指示
- Switch and Symbol, Display.开关和标识、显示器等
- General use.其他应用

Confidential

深圳市瑞丰光电子股份有限公司
承 认 专 用 章

Package Dimension 外观尺寸

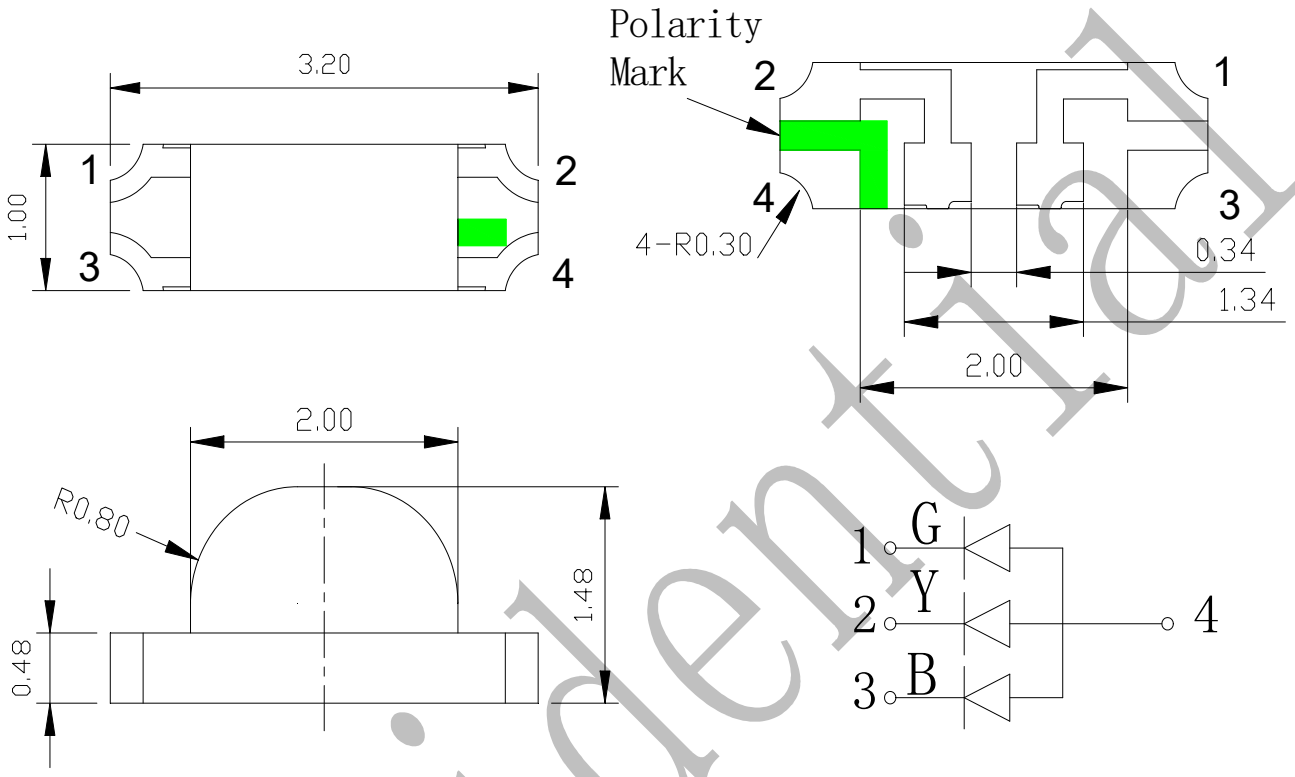

Confidential

深圳市瑞丰光电子股份有限公司
承 认 专 用 章

NOTES:

1. All dimensions units are millimeters. (所有尺寸标注单位为毫米)
2. All dimensions tolerances are ±0.2mm unless otherwise noted. (除特别标注外，所有尺寸公差为±0.2 毫米)

Electrical / Optical Characteristics at Ts=25°C 电性与光学特性

Parameter 参数	Test Condition 测试条件	Symbol 符号			Value（值） Min.	Typ.	Max.	Unit（单位）
Spectral Half bandwidth 半波宽	If=20mA	Δλ	Y		--	15	--	nm
			G		--	30	--	
			B		--	30	--	
Forward voltage 正向电压	If=20mA	Vf	Y	1L	1.8	--	2.4	V
			G	3E	3.0	--	3.4	
			B	3E	3.0	--	3.4	
Dominant wavelength 主波长	If=20mA	λd	Y	A00	582	--	587	nm
				B00	587		592	
				C00	592		597	
			G	D10	515	--	517.5	
				D20	517.5		520	
				E10	520		522.5	
				E20	522.5		525	
			B	D10	465		467.5	
				D20	467.5		470	
				E10	470		472.5	
				E20	472.5	--	475	
Luminous intensity 发光强度	If=20mA	Iv	Y	1AP	90	--	120	mcd
				G20	120		150	
			G	1AU	260	--	330	
				1AV	330	--	430	
				1CG	430	--	560	
				1CL	560	--	700	
				1CM	700	--	900	
			B	1AP	90	--	120	
				G20	120	--	150	
				1AW	150	--	200	
				1GK	200	--	260	
Viewing angle at 50% Iv	If=20mA	2 θ 1/2			--	140	--	Deg
Reverse current	Vr=5V	Ir			--	--	10	μA
Thermal resistance	If=20mA	Rth(j-s)			--	--	450	℃/W

Note:备注

Vr=5V For test conditions. Vr=5v 为测试分选条件。

深圳市瑞丰光电子股份有限公司 承认专用章

Confidential

Absolute Maximum Ratings at Ts=25°C 绝对最大值

Parameter（参数）	Symbol（符号）	Rating（值）			Units（单位）
		Y	G	B	
Power Dissipation（功耗）	Pd	48	68	68	mW
Forward Current（正向电流）	IF	20			mA
Peak Forward Current Of Pulse（脉冲峰值电流）	IFP	60			mA
Electrostatic Discharge (HBM)（静电）	ESD	1000			V
Operating Temperature（操作温度）	Topr	-40 ~ +85			℃
Storage Temperature（储存温度）	Tstg	-40 ~ +85			℃
junction temperature（结温）	Tj	95			℃

Note: 备注

1. 1/10 Duty cycle, 0.1ms pulse width. 脉宽0.1ms, 周期1/10.
2. The above forward voltage measurement allowance tolerance is 0.1V. 以上所示电压测量误差 0.1V.
3. The above dominant wavelength measurement allowance tolerance is ±2nm. 以上所示主波长测量误差±2nm.
4. the above luminous intensity measurement allowance tolerance ±10%. 上述发光强度的测试允许公差为±10%.
5. Care is to be taken that power dissipation does not exceed the absolute maximum rating of the product.
使用功率不能超过规定的最大值。
6. All measurements were made under the standardized environment of Refond，the above range for refond insurable.
所有测试都是基于瑞丰现有的标准测试平台，以上为瑞丰可保范围。
7.When the LEDs are in operation the maximum current should be decided after measuring the package temperature，junction temperature should not exceed the maximum rate.
LED 使用的最大电流需要根据散热条件确定，结温不能超过最大值。

Confidential

深圳市瑞丰光电子股份有限公司
承 认 专 用 章

Typical optical characteristics curves 典型光学特性曲线

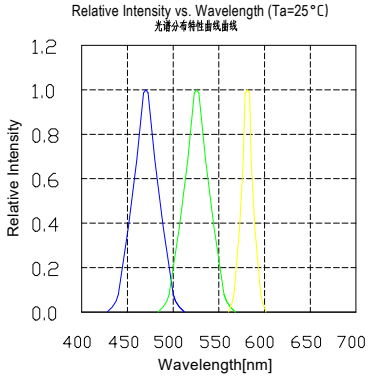

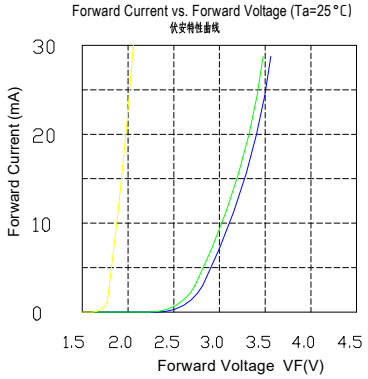

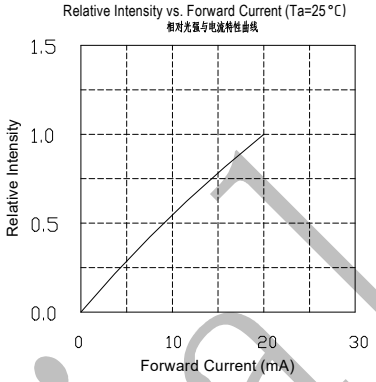

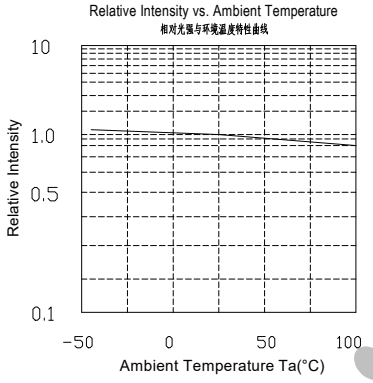

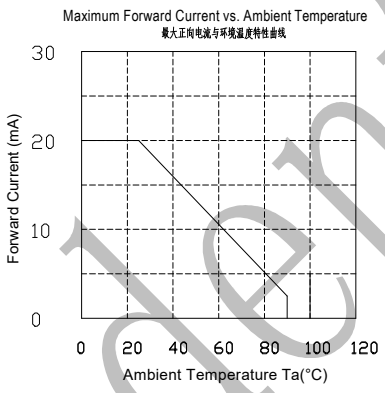

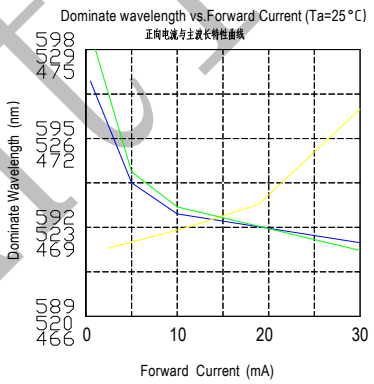

Diagram characteristics of radiation

辐射特性曲线

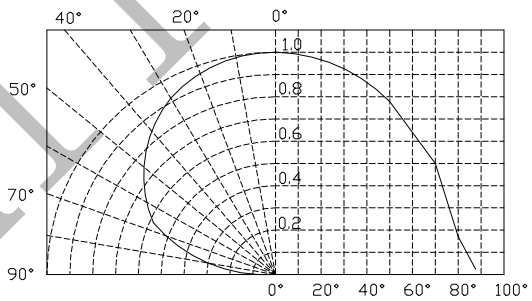

Confidential

深圳市瑞丰光电子股份有限公司
承 认 专 用 章

Packaging Specifications

■ Carrier Tape Dimensions 载带尺寸

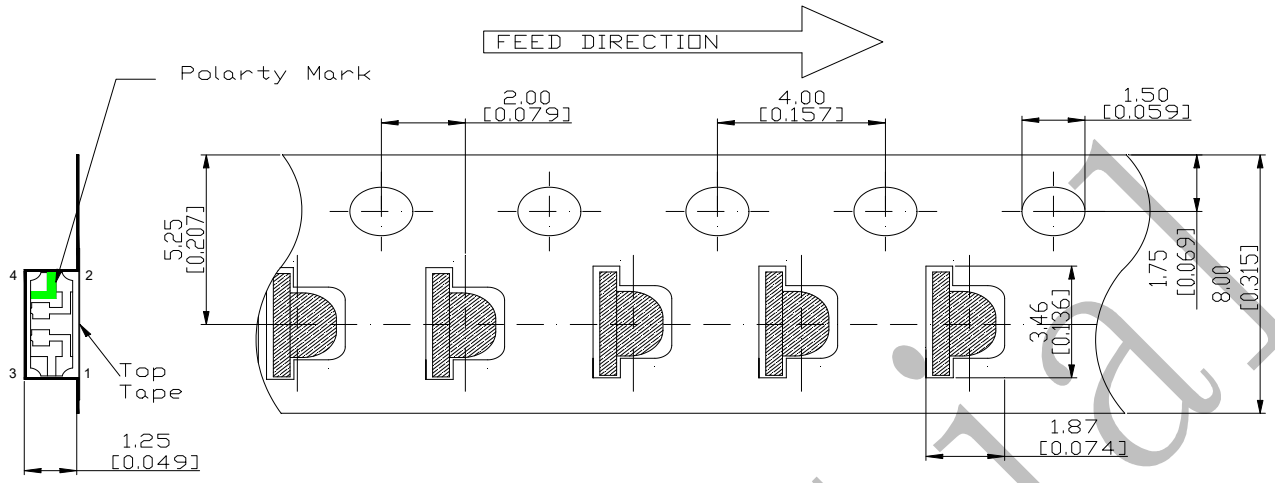

■ Reel Dimension 卷盘尺寸

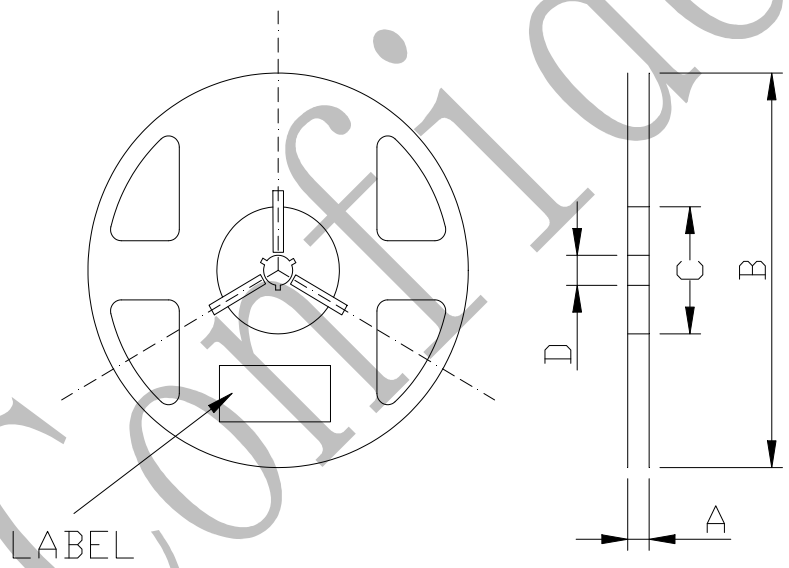

A	8.0±0.1mm
B	178±1mm
C	60±1mm
D	13.0±0.5mm

深圳市瑞丰光电子股份有限公司
承 认 专 用 章

Note:
Thetolerances unless mentioned ±0.1mm. Unit : mm 注：未注公差为±0.1毫米，尺寸单位：毫米。

Confidential

■ Label Form Specification 标签规格

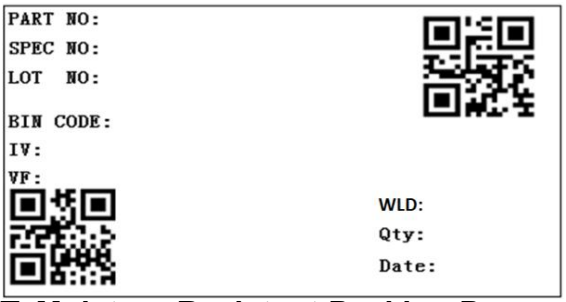

PART NO.	Part Number
SPEC NO.	Spec Number
LOT NO.	Lot Number
BIN CODE	Bin Code
Iv	Luminous intensity
WLD	Dominantwavelength
VF	Forward Voltage
QTY	Packing Quantity
DATE	Made Date

■ Moisture Resistant Packing Process 防潮包装过程

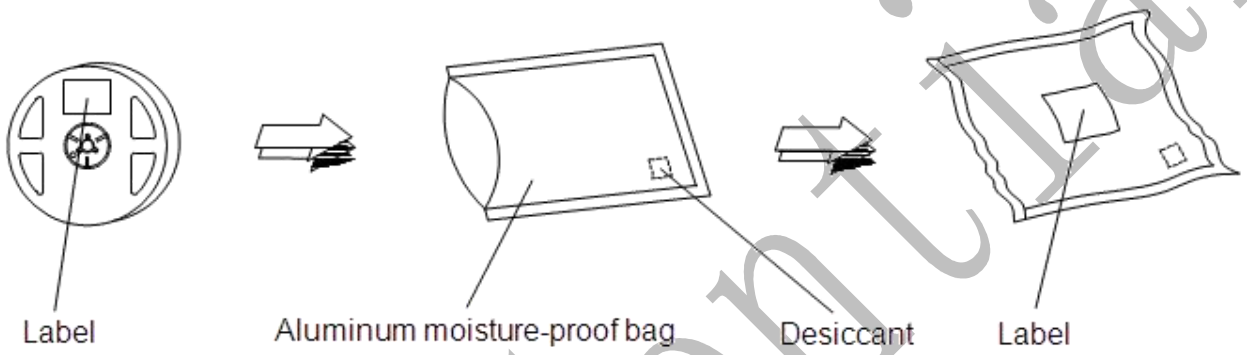

■ Cardboard Box 纸箱

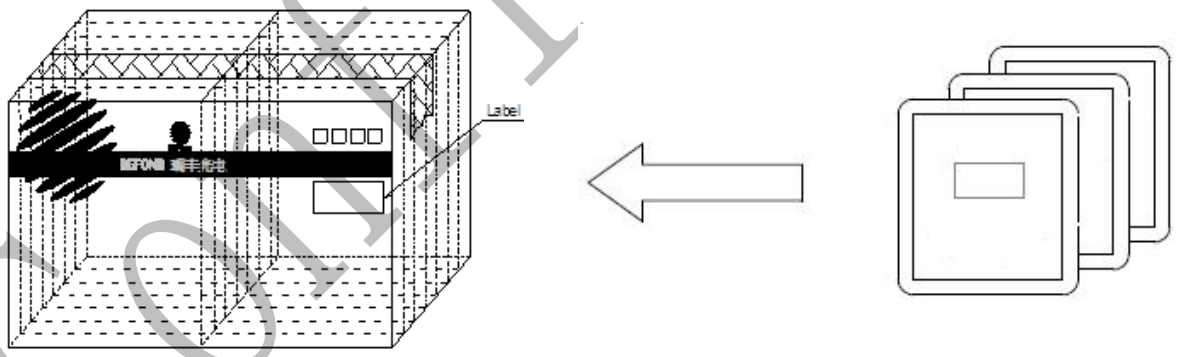

Confidential

深圳市瑞丰光电子股份有限公司
承 认 专 用 章

Reliability Test Items And Conditions 信赖性测试项目及条件

Test Items 项目	Ref.Standard 参考标准	Test Condition 测试条件	Time 时间	Quantity 数量	Ac/Re 接收/拒收
Reflow 回流焊	JESD22-B106	Temp:260℃max T=10 sec	2times.	22Pcs.	0/1
Temperature Cycle 温度循环	JESD22-A104	100℃ 30 min. ↑↓5 min -40℃ 30 min.	300 Cycles	22Pcs.	0/1
Thermal Shock 冷热冲击	JESD22-A106	-40℃ 15min ↑↓ 100℃ 15min	300 cycle	22Pcs.	0/1
High Temperature Storage 高温保存	JESD22-A103	Temp:100℃	1000Hrs.	22Pcs.	0/1
Low Temperature Storage 低温保存	JESD22-A119	Temp:-40℃	1000Hrs.	22Pcs.	0/1
Life Test 常温通电	JESD22-A108	Ta=25℃ IF=20mA	1000Hrs.	22Pcs.	0/1

Criteria For Judging Damage 失效判定标准

Test Items 项目	Symbol 符号	Test Condition 测试条件	Criteria For Judgement 判定标准	
			Min. 最小	Max. 最大
Forward Voltage 正向电压	VF	IF=20mA	-	U.S.L*)x1.1
Reverse Current 漏电流	IR	VR = 5V	-	U.S.L*)x2.0
Luminous Flux 光通量	lm	IF=20mA	L.S.L*)x0.7	-

U.S.L: Upper standard level 规格上限 L.S.L: Lower standard level 规格下限

Note: 备注

The Reliability tests are based on Refond existing test platform. 信赖性测试基于瑞丰现有的测试平台。

The technical information shown in the data sheets are limited to the typical characteristics and circuit examples of the referenced products. It does not constitute the warranting of industrial property nor the granting of any license. 以上技术数据仅为产品的典型值，只作为参考，不作为任何应用条件及应用方式的保证。

Confidential

SMT Reflow Soldering Instructions　SMT回流焊说明

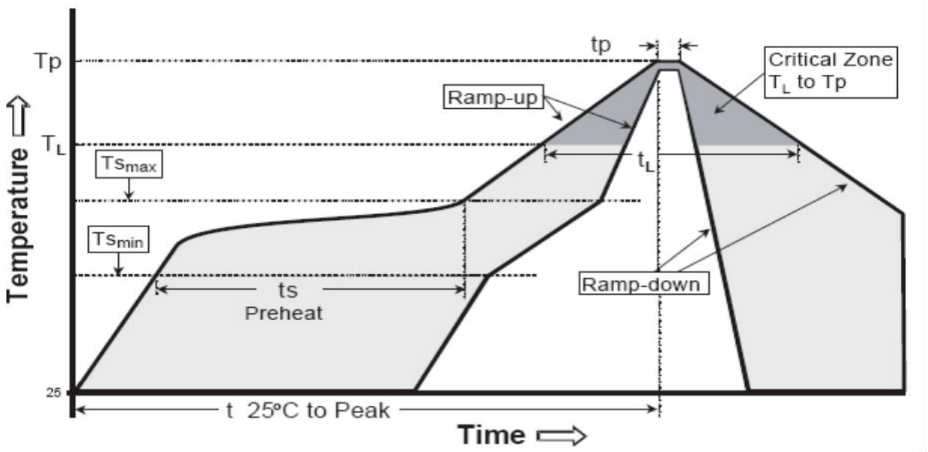

平均升温速度（Tsmax至Tp）	最高 3 °C/ 秒
预热：最低温度 (Tsmin)	150 °C
预热：最高温度 (Tsmax)	200 °C
预热：时间（tsmin至tsmax）	60 - 120 秒
限时维持高温：温度 (TL)	217 °C
限时维持高温：时间 (tL)	最多60 秒
峰值 / 分类温度 (Tp)	260 °C
限时峰值分类温度:时间（tp）	最多10 秒
与实际峰值温度 (tp) 低 5 °C 以内的保持时间	最多30 秒
降温速度	最高 6 °C/ 秒
25 °C 升至峰值温度所需时间	最多 8 分钟

1.Reflow soldering should not be done more than two times. In the case of more than 24 hours passed soldering after first, LEDs will be damaged. 回流焊次数不可以超过两次，两次回流焊的时间间隔如果超过24小时，LED可能由于吸湿而损坏。

2.When soldering , do not put stress on the LEDs during heating 当焊接时,不要在材料受热时用力压胶体表面。

Confidential

深圳市瑞丰光电子股份有限公司
承 认 专 用 章

■ Soldering Iron 烙铁焊接

1.When hand soldering, keep the temperature of iron below less 300℃ less than 3 seconds
当手工焊接时，烙铁的温度必须小于300℃，时间不可超过3秒。
2.The hand solder should be done only one time.手工焊接只可焊接一次。

■ Recommend pad design 推荐焊盘 (Units: mm)

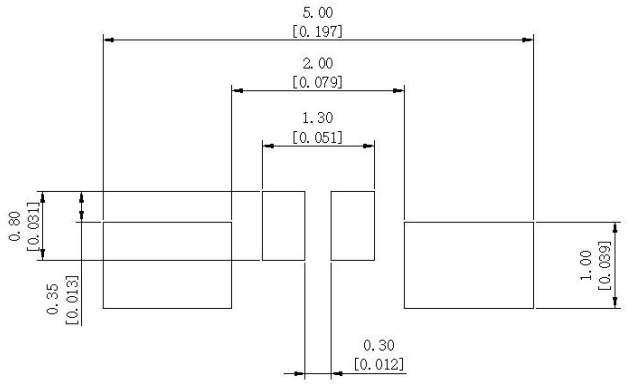

■ Repairing 修补

Repair should not be done after the LEDs have been soldered. When repairing is unavoidable,a double-head soldering iron should be used (as below figure). It should be confirmed in advance whether the characteristics of LEDs will or will not be damaged by repairing. LED回流焊后不应该修复，当必须修复时，必须使用双头烙铁，而且事先应确认此种方式会不会损坏LED本身的特性。

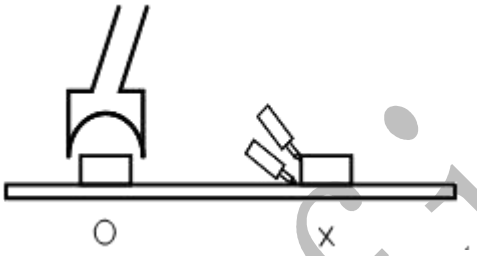

■ Cautions 注意事项

1.The encapsulated material of the LEDs is silicone. Therefore the LEDs have a soft surface on the top of package. The pressure to the top surface will be influence to the reliability of the LEDs. Precautions should be taken to avoid the strong pressure on the encapsulated part. So when usethe picking up nozzle, the pressure on the silicone resin should be proper. LED封装胶为硅胶，表面较软，用力按压胶体表面会影响LED可靠性，因此应有预防措施避免在按压器件，当使用吸嘴时，胶体表面的压力应是恰当的。
2. Components should not be mounted on warped (non coplanar) portion of PCB. After soldering, do not warp the circuit board.LED灯珠不要焊接在弯曲的PCB板上，焊接之后，也不要弯折线路板。
3. Do not apply mechanical force or excess vibration during the cooling process to normal temperature after soldering. Do not rapidly cool device after soldering. 回流焊之后冷却过程中，不要对材料实加外力，也不要有震动，回流焊后，不要采用激剧冷却的方式。

Confidential

深圳市瑞丰光电子股份有限公司
承 认 专 用 章

Handling Precautions 使用注意事项

1>.LED operating environment and sulfur element composition cannot be over 100PPM in the LED mating usage material. This is provided for informational purposes only and is not a warranty or endorsement.LED工作环境及与LED适配的材料中硫元素及化合物成份不可超过100PPM.这只是一个建议，不作任何品质担保。

2>.In order to prevent ex- ternal material from getting into the inside of LED, which may cause the malfunction of LED, the single content of Bromine element is required to be less than 900PPM, the single content of Chlorine element is required to be less than 900PPM,the total content of Bromine element and Chlorine element in the external materials of the application products is required to be less than 1500PPM. This is provided for informational purposes only and is not a warranty or endorsement.为了防止外界物质进入LED内部以造成LED的损伤，所处环境及所用套件等等，单一的溴元素含量要求小于900PPM，单一氯元素含量要求小于900PPM，溴元素与氯元素总含量必须小于1500PPM. 这只是一个建议，不作任何品质担保。

3>VOCs (Volatile organic compounds) emitted from materials used in the construction of fixtures can penetrate silicone encapsulants of LEDs and discolor when exposed to heat and photonic energy. The result can be a significant loss of light output from the fixture. Knowledge of the properties of the materials selected to be used in the construction of fixtures can help prevent these issues. Refond advises against the use of any chemicals or materials that have been found or are suspected to have an adverse affect on device performance or reliability. To verify compatibility, Refond recommends that all chemicals and materials be tested in the specific application and environment for which they are intended to be used. Attaching LEDs, do not use adhesives that outgas organic vapor. 应用套件中的挥发性物质会渗透到LED内部，在通电产生光子及热的条件下，会导致LED变色，进而造成严重光衰，提前了解套件材料能够避免产生这些问题。瑞丰反对使用任何对LED器件的性能或者可靠性有害的物质或材料，不管这些材料是已经证实了的还是仅仅怀疑有害。针对特定的用途和使用环境，瑞丰建议对所有的物质和材料进行相容性的测试。在贴装LED时候，不要使用能产生有机挥发性气体的粘结剂。

4>.Handle the component along the side surface by using forceps or appropriate tools; do not directly touch or Handle the silicone lens surface, it may damage the internal circuitry.通过使用适当的工具从材料侧面夹取，不可直接用手或尖锐金属压胶体表面，它可能会损坏内部电路。

5>.In designing a circuit,the current through each LED must be exceed the absolute maximum rating specified for each LED.In the meanwhile,resistors for protection should be applied,otherwise slight voltage shift will cause big current change,burn out may happen. The driving circuit must be designed to allow forward voltage only when it is ON or OFF.If the reverse voltage is applied to LED, migration can be generated resulting in LED damage. 设计电路时，通过LED的电流不能超过规定的最大值，同时，还需使用保护电阻，否则，微小的电压变化将会引起较大电流变化，可能导致产品损毁。电路设计必须保证只有在开启或者关闭的时候出现正向电压的变化，不要施加反压，否则会损坏LED。

6>.Thermal Design is paramount importance because heat generation may result in the Characteristics decline,such as brightness decreased,Color change and so on.Please consider the heat generation of the LEDs when making the system design.
LED容易因为自身的发热和环境的温度改变而改变，温度升高会降低LED发光效率，影响发光颜色，所以在设计时应充分考虑散热问题。

Confidential

深圳市瑞丰光电子股份有限公司
承 认 专 用 章

7>. Storage 储存

Conditions 种类		Temperature 温度	Humidity 湿度	Time 时间
Storage 储存	Before Opening Aluminum Bag 拆包前	≤30℃	≤75%	Within 1 Year from Delivery Date 一年内
	After Opening Aluminum Bag 拆包后	≤30℃	≤60%	24hours 24小时
Baking 烘烤		60±5℃	-	≥24hours 大于24小时

If the moisture absorbent material (silica gel) has faded away or the LEDs have exceeded the storage time, baking treatment should be performed after unpacking and based on the following condition: (65±5)℃ for above 24 hours。
如果干燥剂或包装失效，或者产品不符合以上有效储存条件，需拆包后进行烘烤，烘烤条件: 60±5℃，大于24小时。
If the package is flatulence or damaged, please notify the sales staff to assist。
如果包装袋胀气或者破损，请通知销售人员协助处理。

8> To avoid the moisture penetration, we recommend store in a dry box with a desiccant. The recommended storage temperature range is 5℃ to 30℃ and a maximum humidity of RH50%. If the color of the desiccant changes, components should be dried for 10-12hr at 60±5℃.为了避免湿气进入，产品应该保存在干燥的地方，同时需要使用干燥剂， 推荐的储存温度是5℃到30℃，最大湿度不能超过50%,如果湿度卡和干燥剂变色了，需要烘烤10-12小时，烘烤温度为60±5℃。

9>Similar to most Solid state devices; LEDs are sensitive to Electro-Static Discharge (ESD) and Electrical Over Stress (EOS). 像其他的半导体电子器件一样，LED对静电过流击穿非常敏感，需要做好防护。

10>.Other points for attention, please refer to our LED user manual.
其它注意事项请参照瑞丰LED使用手册。

Confidential

深圳市瑞丰光电子股份有限公司
承 认 专 用 章