Commercial Pressure and Float Switches for Power Circuits

Catalog
9034CT9701R01/11
Class 9013, 9036, 9037, 9038

PUMPTROL™

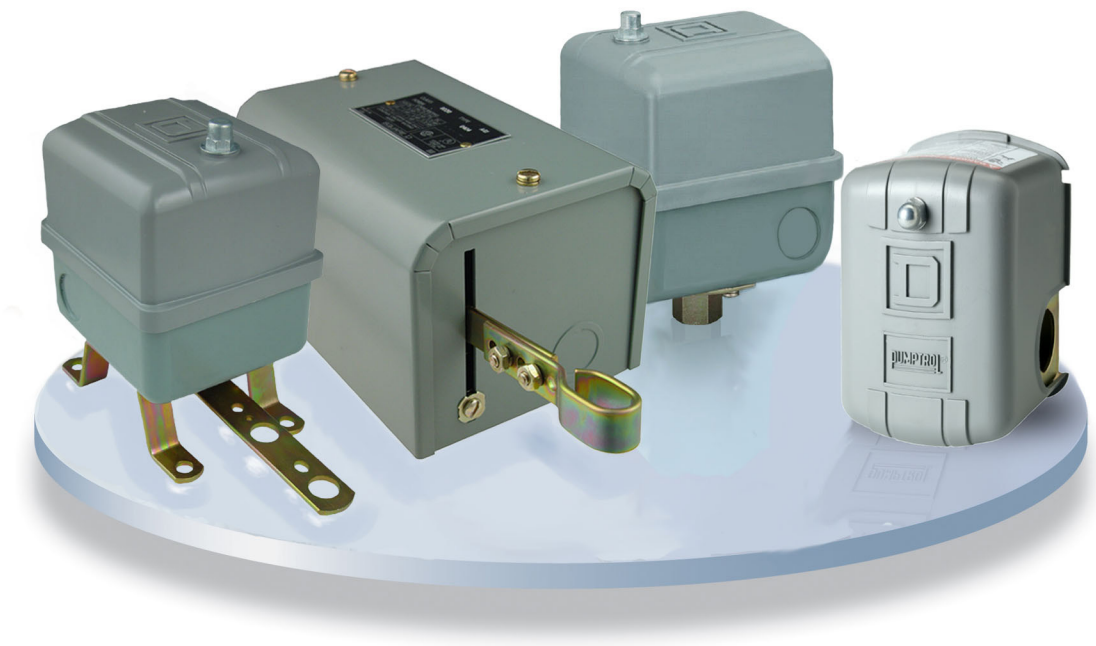

SQUARE D
by Schneider Electric

sales@prom-elec.com / ООО ПРОМЭЛЕКТРОНИКА

Table of Contents

SELECTION GUIDE—PUMPTROL™ COMMERCIAL PRESSURE SWITCHES 4

Class 9013 Electromechanical, Conforming to UL508 and CSA 4

SELECTION GUIDE—FLOAT SWITCHES 6

Class 9036 Type D—Open Tank, General Purpose 6
Class 9036 Type G—Open Tank, Heavy Duty 7
Class 9049—Accessories for Class 9036 Type D and G 8
Class 9036 Type FG—Open Tank, Pedestal Style 9
Class 9049 Type UMS1—Universal Mounting Plate 10
Class 9037 Type E—Closed Tank, Flange Mounted 11
Class 9037 Type H—Closed Tank with Bushing 12
Class 9038 Type A—Mechanical Alternator, Open Tank 13
Class 9038 Type C—Mechanical Alternator, Closed Tank 14
Class 9038 Type D—Mechanical Alternator, Closed Tank 15

ELECTROMECHANICAL PRESSURE SWITCHES, CLASS 9013 TYPES F AND G 17

Introduction 17
Settings 18
General Specifications
Types FSG/FSW, FTG/FTW, and FYG/FYW 19
Types FRG, FHG, and G 20
Interpretation of the Catalog Number 21
Class 9013 Type F Water Pump Switches 21
Class 9013 Type F Air Compressor Switches 22
Class 9013 Type G Pressure Switches 23
Selection and Specifications 24
Dimensions 44

FLOAT SWITCHES—CLASS 9036, 9037, AND 9038 45

Introduction 45
Class 9036 Open Tank 45
Class 9037 Closed Tank 46
Class 9038 Mechanical Alternators 46
Selecting a Float Switch 47
Selecting Floats and Rods 47
Temperature Ratings 48
Electrical Ratings 48
Class 9036 Type D and G Open Tank Float Switches 49
Class 9036 Type FG and Class 9049 Accessories 52
Class 9037 Type E Closed Tank Float Switches 53
Class 9037 Type E Flange-Mounted Float Switches 53
Class 9037 Type E Closed Tank Rod Kits 55
Class 9037 Type H with Screw-in Bushing 57
Class 9038 Type A Mechanical Alternators 59
Class 9038 Type A Open and Sump Tank Mechanical Alternators 59
Class 9038 Type C Mechanical Alternators with Bushing 61
Class 9038 Type D Flange-Mounted Mechanical Alternators 63
Class 9049 Rod Kits for Class 9038 Type D 64
Class 9049 Accessories and Class 9998 Renewal Parts Kits 67

© 2011 Schneider Electric
All Rights Reserved

Selection Guide—Pumptrol™ Commercial Pressure Switches

Class 9013 Electromechanical, Conforming to UL508 and CSA

Pumptrol Family		9013FSG	9013FTG	9013FYG
Applications	Type of Installation	Power circuit	Power circuit	Power circuit
	Controls	Fresh or sea water	Fresh or sea water	Fresh or sea water
	Type of Operation	Regulation between 2 thresholds (adjustable differential). Suitable for all pumps.	Detection of a single threshold (non-adjustable differential)	Regulation between 2 thresholds (adjustable differential). For higher hp and pressure requirements.

Size / Range	psi	20–80	20–65	25–80
	bar	1.38–4.48	1.38–4.48	1.72–5.52
Conforming to Standards		NEMA A600 UL508	UL508	NEMA A600 UL508
Product Certifications		UL File: E12158 CCN NKPZ CSA File: LR 25490 Class 3211 06	UL File: E12158 CCN NKPZ CSA File: LR 25490 Class 3211 06	UL File: E12158 CCN NKPZ CSA File: LR 25490 Class 3211 06
Dimensions (l x h x w) in inches (mm)		3.76 x 2.8 x 2.78 (95.5 x 71.12 x 70.6)	3.76 x 2.8 x 2.78 (95.5 x 71.12 x 70.6)	3.76 x 2.8 x 2.78 (95.5 x 71.12 x 70.6)
Contact Blocks (snap action contacts)		2 N.C.	2 N.C.	2 N.C.
Degree of Protection		NEMA Type 1, NEMA Type 3R, and IP20	NEMA Type 1, NEMA Type 3R, and IP20	NEMA Type 1, NEMA Type 3R, and IP20
Connections	Electrical	Screw terminals	Screw terminals	Screw terminals
	Fluid	Multiple	Multiple	Multiple
Cable Entries		2	2	2
Catalog Numbers		**9013FSG•••**	**9013FTG•••**	**9013FYG•••**
Specifications		Page 19	Page 19	Page 19
Interpretation of Catalog Numbers		Page 24	Page 27	Page 29
Other versions:				
Form B7, one grommet, CE		—	—	—
Form B8, two grommets, CE		—	—	—
NOTE: Inclusion of B7 or B8 grommets will negate UL/CSA approvals for the device, but they may be used for applications which do not require UL/CSA approvals.				

© 2011 Schneider Electric
All Rights Reserved

Pumptrol Family		9013FRG	9013FHG	9013G
Applications	Type of Installation	Power circuit	Power circuit	Power circuit
	Controls	Fresh or sea water	Air only	Water or air
	Type of Operation	Reverse acting, contacts open on falling pressure (adjustable differential)	Control of electrically driven air compressors, contacts open on rising pressure (fixed differential, adjustable cut-out), diaphragm actuated	Light industrial, with higher electrical ratings for direct control of motors in pumps and compressors, contacts open on rising pressure (adjustable differential)

Size / Range	psi	8–150	40–200	10–250
	bar	0.41–10.34	2.76–13.79	0.69–17.24
Conforming to Standards		NEMA A300 UL508	NEMA A600 UL508	NEMA A600 UL508
Product Certifications		UL File: E12158 CCN NKPZ CSA File: LR 25490 Class 3211 06	UL File: E12158 CCN NKPZ with Form T CSA File: LR 25490 Class 3211 06	UL File: E12158 CCN NKPZ (except GHR and GSR) UL File: E12443 CCN NOWT (for GHR and GSR) CSA File: LR 25490 Class 3211 06 (except GHR and GSR) CSA File: LR 26817 Class 3218 05 (for GHR and GSR)
Dimensions (l x h x w) in inches (mm)		3.76 x 2.8 x 2.78 (95.5 x 71.12 x 70.6)	3.76 x 2.8 x 2.78 (95.5 x 71.12 x 70.6)	3.68 x 3.85 x 3.44 (93.47 x 97.79 x 87.37)
Contact Blocks (snap action contacts)		2 N.O.	2 N.C.	2 N.C.
Degree of Protection		NEMA Type 1, NEMA Type 3R, and IP20	NEMA Type 1, NEMA Type 3R, and IP20	NEMA Type 1, NEMA Type 3R, NEMA Type 7, NEMA Type 9, and IP20
Connections	Electrical	Screw terminals	Screw terminals	Screw terminals
	Fluid	Multiple	Multiple	Multiple
Cable Entries		2	2	3 knock-outs available
Catalog Numbers		**9013FRG•••**	**9013FHG•••**	**9013G•••**
Specifications		Page 20	Page 20	Page 20
Interpretation of Catalog Numbers		Page 21	Page 21	Page 21
Other versions:				
Form B7, one grommet, CE		—	—	—
Form B8, two grommets, CE		—	—	—
NOTE: Inclusion of B7 or B8 grommets will negate UL/CSA approvals for the device, but they may be used for applications which do not require UL/CSA approvals.				

© 2011 Schneider Electric
All Rights Reserved

Selection Guide—Float Switches

Class 9036 Type D—Open Tank, General Purpose

Type of Installation	**Horsepower rated**
Product Features	**2-pole switch, lever operated** **Standard action—contacts close on liquid rise** **Reverse action—contacts open on liquid rise**

Fluids Controlled	Water, hydraulic oils, corrosive fluids		
Fluid Characteristics	Fresh water, sea water, hydraulic oils, and corrosive fluids with a density ≥ 0.8		
Contact Arrangement	**Standard**: 2 N.O. (DPST), **Form R**: 2 N.C. (DPST), **Form H**: 1 N.O. and 1 N.C. (SPDT)		
Degree of Protection	NEMA Type 1	NEMA Type 4	NEMA Type 7, 9
Electrical Connection	4 screw terminals, 3 knockouts for 1/2 in. conduit entry	4 screw terminals, 2 cable entries, 3/4-14 conduit entry	
Ambient Temperature	–22 to +220 °F (–30 to +105 °C)		
Catalog Numbers	**9036DG**	**9036DW**	**9036DR**
Page	49		

© 2011 Schneider Electric
All Rights Reserved

Class 9036 Type G—Open Tank, Heavy Duty

Type of Installation	**Horsepower rated**
Product Features	**2-pole switch** **Standard action—contacts close on liquid rise** **Reverse action—contacts open on liquid rise**

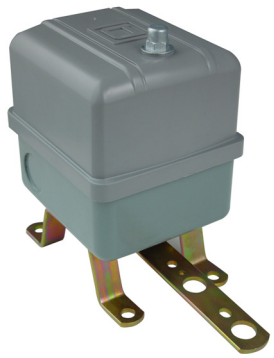

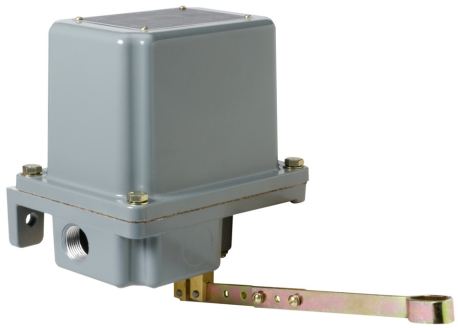

Fluids Controlled	Water, hydraulic oils, corrosive fluids		
Fluid Characteristics	Fresh water, sea water, hydraulic oils, and corrosive fluids with a density ≥ 0.8		
Contact Arrangement	**Standard**: 2 N.O. (DPST), **Form R**: 2 N.C. (DPST), **Form H**: 1 N.O. and 1 N.C. (SPDT)		
Degree of Protection	NEMA Type 1	NEMA Type 4	NEMA Type 7, 9
Electrical Connection	4 screw terminals, 3 knockouts for 1/2 in. conduit entry	4 screw terminals, 2 cable entries, 3/4-14 conduit entry	
Ambient Temperature	–22 to +220 °F (–30 to +105 °C)		
Catalog Numbers	**9036GG**	**9036GW**	**9036GR**
Page	49		

© 2011 Schneider Electric
All Rights Reserved

Class 9049—Accessories for Class 9036 Type D and G

Accessory Kits	Tapped-at-Top Floats (#304 SS) [1]			Center-Hole Floats (#304 SS) [2]			Additional Tubing [3]		
Tubing (rods)	5 ft brass	5 ft Al	5 ft SS	5 ft brass	5 ft Al	5 ft SS	2.5 ft brass	2.5 ft Al	2.5 ft SS
Net buoyancy in water 7 in. float [4]	60	60	60	70	70	70	—	—	—
Total weight of stops oz (g)	3 (85)	3 (85)	3 (85)	6 (170)	6 (170)	6 (170)	—	—	—
Number of stops	2	2	2	4	4	4	—	—	—
Weight of the included 5 ft rod oz (g)	18.5 (524)	6 (170)	16.9 (479)	18.5 (524)	6 (170)	16.9 (479)	—	—	—
Weight per ft of extra rod oz (g)	3.7 (105)	1.2 (34)	3.4 (96)	3.7 (105)	1.2 (34)	3.4 (96)	3.7 (105)	1.2 (34)	3.4 (96)
Catalog Numbers	**9049A6**	**9049A6A**	**9049A6S**	**9049A6C**	**9049A6CA**	**9049A6CS**	**9049T1**	**9049T1A**	**9049T1S**
Page	50								

1 Maximum recommended tubing length for tapped-at-top float: 12.5 ft (3810 mm).

2 Maximum recommended tubing length for center-hole float: 30 ft (9144 mm).

3 Additional tubing kits add on to float accessory kits and include a connector.

4 Net buoyancy calculated with the float 80% submerged, allowing for a 20% operating margin. Buoyancy data calculated for use in water. Contact the Sensor Competency Center for buoyancy data in media having a specific gravity different than water (1.0).

NOTE: When ordering float accessories, first specify the desired accessory kit, then as a second item, give the catalog number and the quantity of the additional tubing kits required. For example, for a 9049A6C kit with 15 ft of tubing, specify:

- 9049A6C, quantity = 1 (float with 5 ft of tubing)
- 9049T1, quantity = 4 (2.5 ft of tubing each, for a total of 10 additional ft)

Compensating Spring

Compensating springs support the weight of long rods that cannot be supported by center-hole floats.

Example

Calculation example Measuring 15 ft of tank depth *System has 15 ft of brass rod, 4 stops, and a center hole float.* Buoyancy is positive, so no compensating spring is required	**Float buoyancy**		70.0 oz
	Total weight		(61.5 oz)
	Weight of stops:	(6.0 oz)	
	Weight of 5 ft of brass rod (included):	(18.5 oz)	
	Weight of 10 ft of brass rod (separate):	(37.0 oz)	
	Buoyancy		8.5 oz

© 2011 Schneider Electric
All Rights Reserved

Class 9036 Type FG—Open Tank, Pedestal Style

Type of Installation	**Horsepower rated**		
Product Features	**2-pole switch, forward or reversing** **Contacts open or close on liquid rise (field convertible)**		
Fluids Controlled	Water, hydraulic oils, corrosive fluids		
Fluid Characteristics	Fresh water, sea water, hydraulic oils, and corrosive fluids with a density ≥ 0.8		
Contact Arrangement	2 N.O. or 2 N.C. (DPST), depending on rod connection		
Degree of Protection	NEMA Type 1		
Electrical Connection	4 screw terminals, 2 cable entries 0.88 in. (22.4 mm) with 0.84 in. (21.3 mm) across flat		
Ambient Temperature	–22 to +220 °F (–30 to +105 °C)		
Catalog Numbers	**9036FG**	**9049A60**	**9049A61**
Description	2-pole, pedestal-style sump pump switch	Plastic, center-hole float	33.75 in. aluminum rod, 2 float stop assemblies, and attaching hardware
Page	51		

© 2011 Schneider Electric
All Rights Reserved

Class 9049 Type UMS1—Universal Mounting Plate

Description	**Mounting plate**
Product Features	**Pedestal mount**

Material	Cold rolled steel
Finish	Painted, powder coated
Mounting Connection	Threaded to accept 1 in. diameter iron pipe
Catalog Numbers	**9049UMS1**
Page	67

Figure 1: 9049UMS1 Dimensions

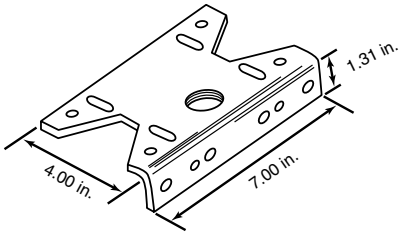

© 2011 Schneider Electric
All Rights Reserved

Class 9037 Type E—Closed Tank, Flange Mounted

Type of Installation	**Horsepower rated**
Product Features	**2-pole switch** **Standard action—contacts close on liquid rise** **Reverse action—contacts open on liquid rise**

Fluids Controlled	Water, hydraulic oils, corrosive fluids		
Fluid Characteristics	Fresh water, sea water, hydraulic oils, and corrosive fluids with a density ≥ 0.8		
Contact Arrangement	**Standard**: 2 N.O. (DPST), **Form R**: 2 N.C. (DPST)		
Degree of Protection	NEMA Type 1	NEMA Type 4	NEMA Type 7, 9
Electrical Connection	4 screw terminals, 3 knockouts for 1/2 in. conduit entry	4 screw terminals, 2 cable entries, 3/4-14 conduit entry	
Ambient Temperature	–22 to +220 °F (–30 to +105 °C)		
Catalog Numbers	**9037EG**	**9037EW**	**9037ER**
Page	53		

NOTE: For float and rod kits, refer to page 55.

© 2011 Schneider Electric
All Rights Reserved

Class 9037 Type H—Closed Tank with Bushing

Type of Installation	**Horsepower rated**
Product Features	**2-pole switch** **Standard action—contacts close on liquid rise** **Reverse action—contacts open on liquid rise**

Fluids Controlled	Water, hydraulic oils, corrosive fluids		
Fluid Characteristics	Fresh water, sea water, hydraulic oils, and corrosive fluids with a density ≥ 0.8		
Contact Arrangement	**Standard**: 2 N.O. (DPST). **Form R**: 2 N.C. (DPST). [1]		
Degree of Protection	NEMA Type 1	NEMA Type 4	NEMA Type 7, 9
Electrical Connection	4 screw terminals, 3 knockouts for 1/2 in. conduit entry	4 screw terminals, 2 cable entries, 3/4-14 conduit entry	
Ambient Temperature	–22 to +220 °F (–30 to +105 °C)		
Catalog Numbers	**9037HG**	**9037HW**	**9037HR**
Page	57		

1 NEMA Type 1 devices can be field modified for reverse action. NEMA Type 4, 7, and 9 devices **cannot** be field modified for reverse action.

© 2011 Schneider Electric
All Rights Reserved

Class 9038 Type A—Mechanical Alternator, Open Tank

Type of Installation	**Horsepower rated**
Product Features	**4-pole switch** **Standard action—contacts close on liquid rise** **Reverse action—contacts open on liquid rise**

Fluids Controlled	Water, hydraulic oils, corrosive fluids		
Fluid Characteristics	Fresh water, sea water, hydraulic oils, and corrosive fluids with a density ≥ 0.8		
Contact Arrangement	4 N.O. (2 DPST)		
Degree of Protection	NEMA Type 1	NEMA Type 4	NEMA Type 7, 9
Electrical Connection	8 screw terminals, 4 knockouts for 1/2 in. or 3/4 in. conduit entry	8 screw terminals, 2 cable entries, 3/4-14 conduit entry	
Ambient Temperature	–22 to +220 °F (–30 to +105 °C)		
Catalog Numbers	**9038AG**	**9038AW**	**9038AR**
Page	59		

© 2011 Schneider Electric
All Rights Reserved

Class 9038 Type C—Mechanical Alternator, Closed Tank

Type of Installation	**Horsepower rated**
Product Features	**4-pole switch** **Standard action—contacts close on liquid rise** **Reverse action—contacts open on liquid rise**

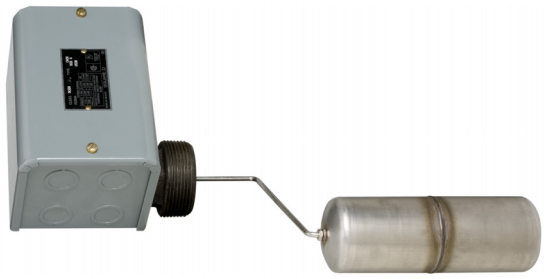

Fluids Controlled	Water, hydraulic oils, corrosive fluids		
Fluid Characteristics	Fresh water, sea water, hydraulic oils, and corrosive fluids with a density ≥ 0.8		
Contact Arrangement	4 N.O. (2 DPST), alternating contacts		
Degree of Protection	NEMA Type 1	NEMA Type 4	NEMA Type 7, 9
Electrical Connection	8 screw terminals, 8 knockouts for 1/2 in. or 3/4 in. conduit entry	8 screw terminals, 2 cable entries, 3/4-14 conduit entry	
Ambient Temperature	–22 to +220 °F (–30 to +105 °C)		
Catalog Numbers	**9038CG**	**9038CW**	**9038CR**
Page	61		

© 2011 Schneider Electric
All Rights Reserved

Class 9038 Type D—Mechanical Alternator, Closed Tank

Type of Installation	**Horsepower rated**
Product Features	**4-pole switch** **Standard action—contacts close on liquid rise** **Reverse action—contacts open on liquid rise**

Fluids Controlled	Water, hydraulic oils, corrosive fluids		
Fluid Characteristics	Fresh water, sea water, hydraulic oils, and corrosive fluids with a density ≥ 0.8		
Contact Arrangement	4 N.O. (2 DPST)		
Degree of Protection	NEMA Type 1	NEMA Type 4	NEMA Type 7, 9
Electrical Connection	8 screw terminals, 8 knockouts for 1/2 in. or 3/4 in. conduit entry	8 screw terminals, 2 cable entries, 3/4-14 conduit entry	
Ambient Temperature	–22 to +220 °F (–30 to +105 °C)		
Catalog Numbers	**9038DG**	**9038DW**	**9038DR**
Page	63		

© 2011 Schneider Electric
All Rights Reserved

Type of Installation	Float Kits				Float Rod Kits					
Material	#304 SS	#316 SS	#304 SS	#316 SS	—	—	—	—	—	—
Dimensions, in. (mm) Diameter x Length	3.625 x 4.5 (92 x 114)	3.625 x 4.5 (92 x 114)	2.5 x 7 (64 x 178)	2.5 x 7 (64 x 178)	—	—	—	—	—	—
R Dimension, in. (mm)	—	—	—	—	1.75 (44)	2.50 (64)	3.25 (83)	5.25 (133)	7.25 (184)	12.25 (311)
H Dimension, in. (mm)	—	—	—	—	8.25 (210)	9.00 (229)	9.50 (241)	11.75 (298)	13.75 (349)	18.75 (476)
Catalog Numbers	**9049EF1**	**9049EF2**	**9049HF3**	**9049HF4**	**9049ER1**	**9049ER2**	**9049ER3**	**9049ER5**	**9049ER7**	**9049ER12**
Pages	53, 63, 67				55–56, 64–67					

Figure 2: Float and Rod Kits

9038DG shown with rod kit 9049ER5 and float kit 9049EF1 installed

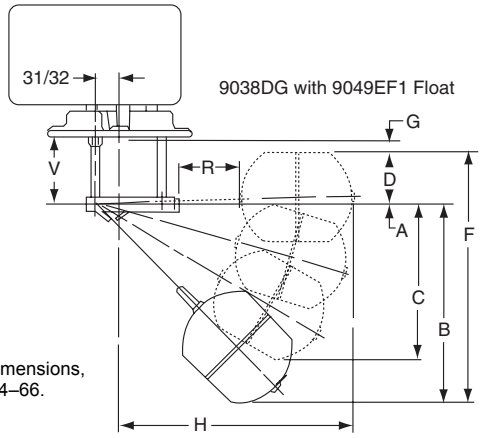

For additional dimensions, refer to pages 64–66.

© 2011 Schneider Electric
All Rights Reserved

PUMPTROL™

Electromechanical Pressure Switches, Class 9013 Types F and G

Introduction

The Pumptrol Class 9013 Type F commercial pressure switches are UL Listed and CSA certified as commercial control equipment. Type G pressure switches are UL Listed and CSA certified as commercial / light industrial control equipment.

The Type FHG compressor pressure switch is used to control electrically driven air compressors. It is diaphragm actuated, and its contacts open on rising pressure.

The Type FSG, FTG, FYG, and FRG water pump pressure switches are used to control electrically driven water pumps. They are diaphragm actuated.

- The Type FSG standard water pump switch is suitable for all types of pumps, including jets, submersible, and reciprocating.
- The Type FTG fixed differential water pump switch is suitable for all types of pumps, including jets, submersible, and reciprocating. It is an ideal choice for OEM markets. Minimum quantity restrictions apply.
- The Type FYG is designed to meet higher horsepower and pressure requirements.
- The Type FRG is reverse acting: the contacts open on falling pressure.

The Type G commercial / light industrial pressure switch is used to control electrically driven water pumps and air compressors. It has higher electrical ratings for direct control of motors in pump and compressor applications. The Type G switch is diaphragm actuated, and its contacts open on rising pressure.

Setting Points

Every pressure switch has two setting points: one on rising pressure and one of falling pressure. For pumps and compressors, the setting point on rising pressure is called the trip point or cut-out; the setting point on falling pressure is called the reset point or cut-in.

Differential

The differential is the difference in pressure between the trip point (cut-out) and the reset point (cut-in). It can be adjustable or fixed. **Example—**Cut-in (30 psi) / Cut-out (50 psi): Differential = 20 psi

Range

The range indicates the pressure limits within which the settings can be adjusted. The range is referenced to the setting point on rising pressure (trip point). The differential subtracts from the trip point setting. When using a diaphragm-actuated switch, system pressure during the normal operating cycle should never exceed the upper limit of the range. Excessive pressure will greatly reduce the life of the diaphragm.

Maximum Allowable Pressure

Maximum allowable pressure is the pressure to which a switch can be subjected without causing a change in operating characteristics, shift in settings, or damage to the device. Pressure surges may occur in a system during the start up of a machine or from valve operation. Surges are not normally detrimental to the life of a switch if the surge is within the maximum allowable pressure rating of the switch. Diaphragm-actuated switches should not be subjected to more than 10 surges per day. More frequent surges will greatly reduce the life of the diaphragm.

© 2011 Schneider Electric
All Rights Reserved

Settings

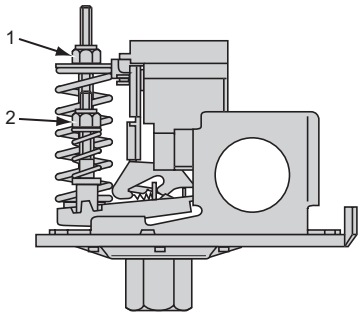

Pressure switches with adjustable differential (Types FSG, FYG, and FRG)

When setting the pressure switch, adjust the setting point on falling pressure first, then the setting point on rising pressure (PB).

- **Setting point on falling pressure**

  The setting point on falling pressure is set by adjusting range-nut **1**.
- **Setting point on rising pressure**

  The setting point on rising pressure is set by adjusting range-nut **2**.

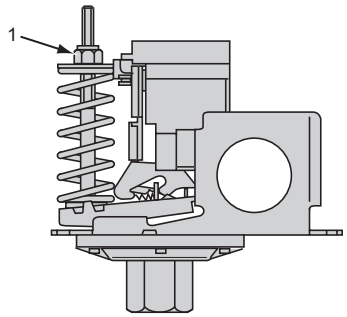

Pressure switches with fixed differential (Types FTG and FHG)

Only the setting point on rising pressure is adjustable.

- **Setting point on rising pressure**

  The setting point on rising pressure is set by adjusting range-nut **1**.
- **Setting point on falling pressure**

  The setting point on falling pressure is not adjustable.

The difference between the tripping and resetting points of the contact is the inherent differential of the switch (due to factors such as contact differential and friction).

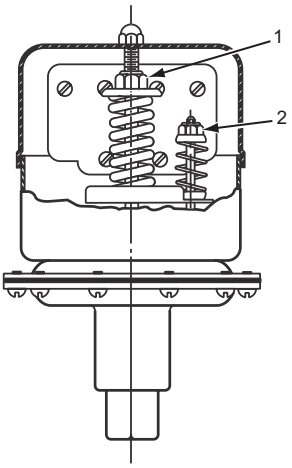

Pressure switches with adjustable differential (Type G)

When setting the pressure switch, adjust the setting point on falling pressure first, then the setting point on rising pressure.

- **Setting point on falling pressure**

  The setting point on falling pressure is set by adjusting range-nut **1**.
- **Setting point on rising pressure**

  The setting point on rising pressure is set by adjusting range-nut **2**.

© 2011 Schneider Electric
All Rights Reserved

General Specifications
Types FSG/FSW, FTG/FTW, and FYG/FYW

Table 1: Environment

Type	FSG/FSW	FTG/FTW	FYG/FYW
Conforming to standards	UL 508, NEC Article 430-84, ANSI/NSF Standard 61, FDA 21CFR.2600		
Product approvals	UL File E12158 CCN NKPZ , CSA File LR 25490 Class 321106		
Degree of protection	IP20, NEMA Type 1 (Types F•G). NEMA Type 3R (Types F•W) must be mounted in vertical position to maintain enclosure rating.		
Operating position	IP20 and NEMA Type 1 in any position, NEMA Type 3R in the vertical position only.		
Operating rate	10 cycles/m		
Repeat accuracy	±3% of the range		
Ambient air temperature			
Storage	–22 to 158 °F (–30 to 70 °C)		
Operation	–22 to 257 °F (–30 to 125 °C)		
Fluids Controlled	Fresh water (or sea water with Form Q)		
Materials	Cover: polypropylene, Noryl® thermoplastic resin or equivalent for Type 3R. Component material in contact with fluid: flange, zinc plated or equivalent (fluid entry), nitrile or equivalent rubber (diaphragm)		
Fluid connection	1/8" NPSF internal, 1/4" NPSF internal, 1/2" NPT external, 1/4" bayonet (barbed), 90° elbow 1/4" bayonet, four-way flange, 3/8" NPSF internal, 1/4" flare and other specials		
Electrical connection	2 open side entries, 0.88 in. diameter, with two flats		

Table 2: Contact Block Characteristics

Type of contacts	One 2 pole, 2 N.C. (4 terminal) contacts, snap action
Resistance across terminals	< 25 mΩ
Short-circuit protection	5,000 A
Connection	Screw clamp terminals. Clamping capacity up to 10 AWG (5.261 mm^2)
Electrical durability	100,000 cycles
Mechanical durability	300,000 cycles (actual product life will vary based on electrical load, duty cycle, application, and environmental conditions)

Table 3: Electrical Ratings

Type (2 pole)		FSG/FSW			FTG/FTW			FYG/FYW		
	Voltage	~ 1 Ø Vac	~ 3 Ø Vac	Vdc	~ 1 Ø Vac	~ 3 Ø Vac	Vdc	~ 1 Ø Vac	~ 3 Ø Vac	Vdc
Power ratings of controlled motors	**115 V**	1.1 kW (1.5 hp)	1.5 kW (2 hphp)	0.18 kW (.25 hp)	0.75 kW (1 hp)	—	—	1.5 kW (2 hp)	2.2 kW (3 hp)	0.37 kW (.50 hp)
	230 V	1.5 kW (2 hp)	2.2 kW (3 hp)	0.18 kW (.25 hp)	0.75 kW (1 hp)	—	—	2.2 kW (3 hp)	3.7 kW 5 hp)	0.37 kW (.50 hp)
	460 / 575 V	—	0.75 kW (1 hp)	—	—	—	—	—	0.75 kW (1 hp)	—

© 2011 Schneider Electric
All Rights Reserved

Types FRG, FHG, and G

Table 4: Environment

Type	FRG	FHG	G
Conforming to Standards	UL 508, NEC Article 430-84, ANSI/NSF Standard 61, FDA 21CFR.2600		
Product approvals	UL File E12158 CCN NKPZ , CSA File LR 25490 Class 321106		
Degree of protection	IP20, NEMA Type 1. NEMA Type 3R (only Types G•B) must be mounted in vertical position to maintain enclosure rating		
Operating position	IP20 and NEMA Type 1 in any position, NEMA Type 3R in the vertical position only		
Operating rate	10 cycles/m		
Repeat accuracy	±3% of the range		
Ambient air temperature			
Storage	–22 to 158 °F (–30 to 70 °C)		
Operation	–22 to 257 °F (–30 to 125 °C)		
Fluids Controlled	Fresh water (or sea water with Form Q)		
Materials	Cover: polypropylene, Noryl thermoplastic resin or equivalent for Type 3R, Component material in contact with fluid: flange, zinc plated or equivalent (fluid entry), nitrile or equivalent rubber (diaphragm)		
Fluid connection	1/8" NPSF internal, 1/4" NPSF internal, 1/2" NPT external, 1/4" bayonet (barbed), 90° elbow 1/4" bayonet, four-way flange, 3/8" NPSF internal, 1/4" flare and other specials		
Electrical connection	2 open side entries, 0.88 in. diameter, with two flats		3 knockouts for 1/2" conduit

Table 5: Contact Block Characteristics

Type of contacts	One 2 pole, 2 N.C. (4 terminal) contacts, snap action Type FRG: 1 or 2 pole, 2 N.O. (2 or 4 terminal) contacts, snap action
Resistance across terminals	< 25 mΩ
Short-circuit protection	5,000 A
Connection	Screw clamp terminals. Clamping capacity up to 10 AWG (5.261 mm^2)
Electrical durability	100,000 cycles
Mechanical durability	300,000 cycles (actual product life will vary based on electrical load, duty cycle, application, and environmental conditions)

Table 6: Electrical Ratings

Type (1 pole) [1]		FRG			FHG			G		
	Voltage	~ 1 Ø Vac	~ 3 Ø Vac	Vdc	~ 1 Ø Vac	~ 3 Ø Vac	Vdc	~ 1 Ø Vac	~ 3 Ø Vac	Vdc
Power ratings of controlled motors [2]	**32 V**	—	—	—	—	—	—	—	—	—
	115 V	0.75 kW (1 hp)	—	0.18 kW (.25 hp)	1.1 kW (1.5 hp)	1.5 kW (2 hp)	0.18 kW (.25 hp)	0.75 kW (1 hp)	—	0.37 kW (.50 hp)
	230 V	0.75 kW (1 hp)	—	0.18 kW (.25 hp)	1.5 kW (2 hp)	2.2 kW (3 hp)	0.18 kW (.25 hp)	1.5 kW (2 hp)	—	0.37 kW (.50 hp)
	460 / 575 V	—	—	—	—	0.75 kW (1 hp)	—	1.5 kW (2 hp)		—
Type (2 pole) [3]										
	Voltage	~ 1 Ø Vac	~ 3 Ø Vac	Vdc	~ 1 Ø Vac	~ 3 Ø Vac	Vdc	~ 1 Ø Vac	~ 3 Ø Vac	Vdc
Power ratings of controlled motors	**32 V**	—	—	0.18 kW (.25 hp)	—	—	—	—	—	—
	115 V	0.75 kW (1 hp)	0.75 kW (1 hp)	0.18 kW (.25 hp)	1.5 kW (2 hp)	2.2 kW (3 hp)	0.37 kW (.50 hp)	1.5 kW (2 hp)	2.2 kW (3 hp)	0.75 kW (1 hp)
	230 V	0.75 kW (1 hp)	0.75 kW (1 hp)	0.18 kW (.25 hp)	2.2 kW (3 hp)	3.7 kW 5 hp)	0.37 kW (.50 hp)	2.2 kW (3 hp)	3.7 kW 5 hp)	0.75 kW (1 hp)
	460 / 575 V	—	—	—	—	0.75 kW (1 hp)	—	3.7 kW 5 hp)	3.7 kW 5 hp)	—

1 Includes: FHG 2, 3, 4, 9, 12, 13, 14, 19, 42, 44, 49

2 Type FRG and G devices include 1 N.O. and 1 N.C. contact (Form H).

3 Includes: FHG 22, 24, 29, 32, 33, 34, 39, 52, 54, 59

© 2011 Schneider Electric
All Rights Reserved

Interpretation of the Catalog Number

PUMPTROL™

Class 9013 Type F Water Pump Switches

Example: 9013FSG2J24C20

FS G 2 J24 C20

Type	Enclosure	Fluid Connection		Differential psi	Range psi	Code	psi	Form	Modification
FS: Standard Adj Diff ≤ 1.5 hp	**G**: NEMA 1	**1**:	1/8" NPSF Internal	15–30	20–65	**Standard Action**		**C20**:	Standard pack of 20 devices per box [1]
FT: Fixed Diff ≤ 1 hp	**W**: NEMA 3R	**2**:	¼" NPSF internal	15–30	20–65	**J15**:	5–21	**H**:	1 N.O. / 1 N.C. contact FRG 2-pole only
FY: Adj Diff ≤ 2 hp		**9**:	¼" NPT external	15–30	20–65	**J16**:	8–20	**M1**:	Maintained manual cut-out lever (Auto-Off) FSG, FYG
FR: Reverse Acting, Adj Diff ≤ 1 hp		**10**:	¼" Bayonet (barbed)	15–30	20–65	**J20**:	20–40	**M3**:	Momentary manual cut-in lever (Auto-Start) (FRG2–59)
		20:	90° Elbow ¼" Bayonet	15–30	20–65	**J18**:	20–50	**M4**:	Low pressure cut-off (Auto-Start-Off) FSG, FYG
		22:	¼" NPSF internal	10–30	20–50	**J21**:	30–50	**M5**:	Maintained manual cut-in lever (Auto-On) FRG2–59
		29:	¼" NPT external	10–30	20–60	**J24**:	40–60	**P**:	Pulsation plug (Type 2 and 9)
		42:	¼" NPSF internal	6–20	9–30	**J33**:	50–70	**T**:	½" conduit bushing— ½" long thread—on left
		49:	¼" NPT external	6–20	9–30	**J34**:	55–85	**U**:	Slip-on connections (load side terminals only) FSG, FYG
		52:	¼" NPSF internal	20–30	25–80	**J25**:	60–80	**U2**:	Slip-on connections (line and load side terminals) FSG, FYG
		59:	¼" NPT external	20–30	25–80	**Reverse Action**		**Z22**:	Black cover FSG, FYG
						J17:	8.5–5.5		
						J36:	10–5		
						J22:	22–12		
						J19:	22–16		
						J70:	35–20		
						J23:	40–20		
						J35:	50–30		
						J32:	80–60		
						J51:	100–80		
						J64:	150–120		
						J99:	Specify pressure setting		

1 Additional bulk packages are available. See Table 7 on page 37.

NOTE: Use this table only to interpret the catalog number. Some combinations are not available.

© 2011 Schneider Electric
All Rights Reserved

Class 9013 Type F Air Compressor Switches

PUMPTROL™

Example: 9013FHG2J27C20

FH G 2 J27 C20

Type	Enclosure	Low hp ≤ 1.5 hp	High hp ≥ 2 hp	Fluid Connection	Differential psi	Range psi	Code	psi	Form	Modification
FH:	**G**: NEMA 1	**2**:	**22**:	¼“ NPSF internal	20	40–100	**J43**:	Off at 80	**C20**:	Standard pack of 20 devices per box [1]
		3:	**—**	3/8“ NPSF internal	20	40–100	**J27**:	Off at 100	**G4**:	Addition of a second ground screw
		4:	**24**:	¼“ 4-way flange	20	40–100	**J37**:	Off at 110	**M1**:	Maintained manual cut-out lever (Auto-Off)
		9:	**29**:	¼“ NPT external	20	40–100	**J38**:	Off at 115	**P**:	Pulsation plug (copper) (not field installable)
		12:	**32**:	¼“ NPSF internal	30	70–150	**J69**:	Off at 120	**T**:	½“ conduit bushing—½“ long thread—on left
		13:	**33**:	3/8“ NPSF internal	30	70–150	**J52**:	Off at 125	**U**:	Slip-on connections (load side terminals only)
		14:	**34**:	¼“ 4-way flange	30	70–150	**J39**:	Off at 135	**U2**:	Slip-on connections (line and load side terminals)
		19:	**39**:	¼“ NPT external	30	70–150	**J68**:	Off at 140	**W**:	Factory sealed range stud
		42:	**52**:	¼“ NPSF internal	40	100–200	**J55**:	Off at 150	**X**:	2-way pressure release value
		44:	**54**:	¼“ 4-way flange	40	100–200	**J40**:	Off at 155	**X1**:	Quick connect two-way pressure release valve
		49:	**59**:	¼“ NPT external	40	100–200	**J59**:	Off at 175	**Z22**:	Black cover
							J99:	Specify pressure setting		

1 Additional bulk packages are available. See Table 7 on page 37.

NOTE: Use this table only to interpret the catalog number. Some combinations are not available.

© 2011 Schneider Electric
All Rights Reserved

Class 9013 Type G Pressure Switches

PUMPTROL™

Example: **9013GHG2J26C10**

GH	G	2	J26	C10

Type	Enclosure	Fluid Connection			Code	psi	Form	Modification [1]
				GH				
GH: 200/250 psi	**G**: NEMA 1	**1**:	1/8“ NPSF internal	200	**J20**:	20–40	**C10**:	Standard pack of 10 devices per box GHB, GHG, GSB, GSG
GS: 80 psi	**B**: NEMA 3R	**2**:	¼“ NPSF internal	200	**J21**:	30–50	**E**:	3-way lever (On-Auto-Off) not compatible with Form X GHG, GMG, GSG
GM: 35 psi	**W**: NEMA 4	**3**:	3/8“ NPSF internal	200	**J23**:	40–20	**H**:	1 N.O. / 1 N.C. contact
	R: NEMA 7, 9	**4**:	1/8“ NPSF internal	250	**J24**:	40–60	**P**:	Pulsation plug (copper) (not field installable)
		5:	¼“ NPT external	250	**J25**:	60–80	**R**:	Reverse action / 2 N.O. contacts
		6:	3/8“ NPSF internal	250	**J26**:	70–90	**U**:	Slip-on connections (load side terminals only)
					J28:	70–100	**U2**:	Slip-on connections (line and load side terminals)
				GS	**J29**:	75–100	**X**:	2-way pressure release value (not compatible with Form E) available on GHB, GMG, GSB, GHG, GSG, GHR, GHW, GSR, GSW
		1:	1/8“ NPSF internal	80	**J30**:	80–100		
		2:	¼“ NPSF internal	80	**J31**:	90–120		
		3:	3/8“ NPSF internal	80	**J51**:	100–80	**Z**:	¼“ male pipe thread on pressure connection
					J53:	100–125	**Z16**:	½" - 14 NPT external, ¼“ - 18 NPT internal
				GM	**J54**:	110–125		
		2:	¼“ NPSF internal	35	**J56**:	110–150		
					J57:	120–150		
					J58:	125–150		
					J60:	125–175		
					J61:	130–175		
					J50:	135–175		
					J66:	140–170		
					J62:	140–175		
					J63:	145–175		
					J64:	150–120		
					J67:	150–175		
					J65:	215–250		
					J99:	Specify pressure setting		

1 Cannot order Form R in combination with Form H.

NOTE: Use this table only to interpret the catalog number. Some combinations are not available.

© 2011 Schneider Electric
All Rights Reserved

Selection and Specifications

Type FSG, 2-Pole, 2 N.C. Contacts
Degree of Protection IP20, NEMA Type 1

Flange Style	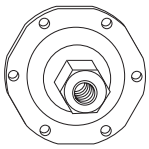	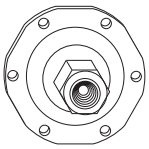	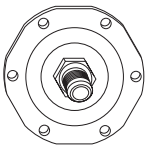	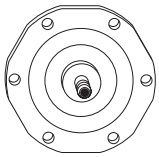	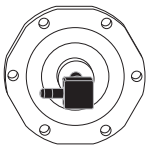
Adjustable range of setting point 20.3–66.7 psi (1.4–4.6 bar) Contacts open on rising pressure					
Differential	Adjustable				
Fluid Connections	1/8" NPSF internal	1/4" NPSF internal	1/4" NPT external	1/4" bayonet (barbed)	90° elbow ¼" bayonet
Catalog Numbers					
NEMA Type 1, IP20	9013FSG1	9013FSG2	9013FSG9	9013FSG10	9013FSG20
NEMA Type 3R [1]	9013FSW1	9013FSW2	9013FSW9	9013FSW10	9013FSW20
Fluids Controlled	Water	Water	Water	Water	Water
Pressure Range					
Cut-out psig (bar)	20–65 (1.4–4.5)	20–65 (1.4–4.5)	20–65 (1.4–4.5)	20–65 (1.4–4.5)	20–65 (1.4–4.5)
Cut-in psig (bar)	5–45 (0.3–3.1)	5–45 (0.3–3.1)	5–45 (0.3–3.1)	5–45 (0.3–3.1)	5–45 (0.3–3.1)
Weight, lb (kg)	0.75 (0.340)	0.75 (0.340)	0.75 (0.340)	0.75 (0.340)	0.75 (0.340)
Supplemental Specifications (not shown under General Specifications)					
Differential psig (bar)	15–30 (1.0–2.1)				
Maximum Allowable Pressure psig (bar)	65 (4.5)				
Cable Entry	2 cable entries 0.88 in. (22.4 mm) with 0.84 in. (21.3 mm) across flats				
Pressure Switch Style	Diaphragm				

1 Must be mounted in a vertical position to maintain enclosure rating.

Ordering information

1. Select the catalog number from the table above.
2. Select the pressure code and add the code designation to the end of the catalog number. Ensure that the pressure code falls within the limits of the device as shown in the device listings.
3. If special features are desired, add the appropriate Form letter to the catalog number after the pressure code. Arrange the Form letters in alphabetical sequence when ordering more than one special feature.
4. Add the packaging code at the end of the sequence, after the Forms. (For example, to order a standard pack of 20 devices, specify 9013FSG2J21MIC20.) If no packaging code is indicated, the devices will be shipped individually packaged.

Pressure codes

NOTE: Existence of a code does not imply that the code is available for any or all devices.

Settings (psi)	Code
5–21	J15
8–20	J16
20–40	J20
20–50	J18
30–50	J21
40–60	J24
50–70	J33
60–80	J25
Specify pressure settings	J99

© 2011 Schneider Electric
All Rights Reserved

Flange Style	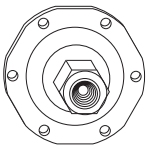	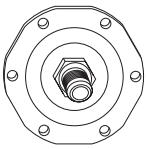	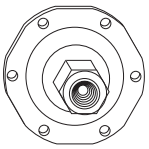	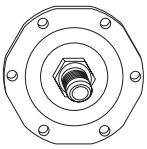	
Adjustable range of setting point 20.3–66.7 psi (1.4–4.6 bar) Contacts open on rising pressure					
Differential	Adjustable				
Fluid Connections	1/4" NPSF internal	1/4" NPT external	1/4" NPSF internal	1/4" NPT external	—
Catalog Numbers					
NEMA Type 1, IP20	9013FSG22	9013FSG29	9013FSG42	9013FSG49	9013FSG1–20 with M4 [1]
NEMA Type 3R [2]	9013FSW22	9013FSW29	9013FSW42	9013FSW49	—
Fluids Controlled	Water	Water	Water	Water	Water
Pressure Range					
Cut-out psig (bar)	20–50 (1.4–3.5)	20–60 (1.4–4.2)	9–30 (0.6–2.1)	9–30 (0.6–2.1)	34–65 (2.3–4.5)
Cut-in psig (bar)	10–30 (0.7–2.1)	10–45 (0.7–3.1)	3–10 (0.2–0.7)	3–10 (0.2–0.7)	19–45 (1.3–3.1)
Weight, lb (kg)	0.75 (0.340)	0.75 (0.340)	0.75 (0.340)	0.75 (0.340)	0.75 (0.340)
Supplemental Specifications (not shown under General Specifications)					
Differential psig (bar)	10–30 (0.7–2.1)	10–30 (0.7–2.1)	6–20 (0.4–1.4)	6–20 (0.4–1.4)	15–30 (1.0–2.1)
Maximum Allowable Pressure psig (bar)	50 (3.5)	60 (4.1)	30 (2.1)	30 (2.1)	65 (4.5)
Cable Entry	2 cable entries 0.88 in. (22.4 mm) with 0.84 in. (21.3 mm) across flats				
Pressure Switch Style	Diaphragm				

1 Nylon pulsation plug can be field installed on types having 1/4" NPSF internal connector. Catalog number 1530S6G1 is one bag of 50 plugs.

2 Must be mounted in a vertical position to maintain enclosure rating.

Modifications (Forms)

Description	Applies to:	Form letter
Standard pack of 20 devices per box	All Type F	C20 [1]
Maintained manual cut-out lever (Auto-Off)	FSG, FYG	M1
Low pressure cut-off (Auto-Start-Off) operates at approximately 10 psig below cut-in and will turn off the pump	FSG, FYG (Type 1–20 only)	M4
Maintained manual cut-in lever (Auto-On)	FSG, FYG	M5
Pulsation plug (standard on FSG4)	FSG2, 9	P [2]
½" conduit bushing—½" long thread—on left	All Type F	T
Slip-on connectors (load side terminals only)	FSG, FYG	U
Slip-on connectors (line and load side terminals)	FSG, FYG	U2
Black cover	FSG, FYG	Z22

1 Additional bulk packages are available. See Table 7 on page 37.

2 Nylon pulsation plug can be field installed on types having 1/4" NPSF internal connector. Catalog number 1530S6G1 is one bag of 50 plugs.

© 2011 Schneider Electric
All Rights Reserved

Flange Style

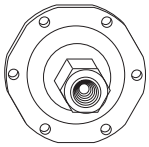

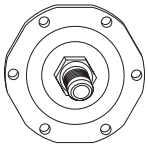

Adjustable range of setting point Contacts open on rising pressure		
Differential	Adjustable	
Fluid Connections	1/4" NPSF internal	1/4" NPT external
Catalog Numbers		
NEMA Type 1, IP20	9013FSG52	9013FSG59
NEMA Type 3R	—	—
Fluids Controlled	Water	Water
Pressure Range		
Cut-out psig (bar)	25–80 (1.7–5.5)	25–80 (1.7–5.5)
Cut-in psig (bar)	5–60 (0.3–4.2)	5–60 (0.3–4.2)
Weight, lb (kg)	0.75 (0.340)	0.75 (0.340)
Supplemental Specifications (not shown under General Specifications)		
Differential psig (bar)	20–30 (1.4–2.1)	
Maximum Allowable Pressure psig (bar)	80 (5.5)	
Cable Entry	2 cable entries 0.88 in. (22.4 mm) with 0.84 in. (21.3 mm) across flats	
Pressure Switch Style	Diaphragm	

Ordering information

1. Select the catalog number from the table above.
2. Select the pressure code and add the code designation to the end of the catalog number. Ensure that the pressure code falls within the limits of the device as shown in the device listings.
3. If special features are desired, add the appropriate Form letter to the catalog number after the pressure code. Arrange the Form letters in alphabetical sequence when ordering more than one special feature.
4. Add the packaging code at the end of the sequence, after the Forms. (For example, to order a standard pack of 20 devices, specify 9013FSG2J21MIC20.) If no packaging code is indicated, the devices will be shipped individually packaged.

Pressure codes

NOTE: Existence of a code does not imply that the code is available for any or all devices.

Settings (psi)	Code
5–21	J15
8–20	J16
20–40	J20
20–50	J18
30–50	J21
40–60	J24
50–70	J33
60–80	J25
Specify pressure settings	J99

© 2011 Schneider Electric
All Rights Reserved

Type FTG, 2-Pole, 2 N.C. Contacts
Degree of Protection IP20, NEMA Type 1

Flange Style	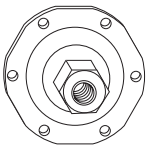	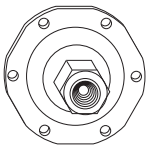	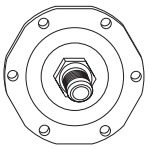	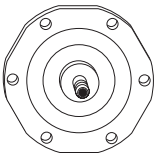	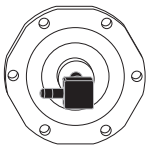
Fixed range of setting point Contacts open on rising pressure					
Differential	Fixed				
Fluid Connections	1/8" NPSF internal	1/4" NPSF internal	1/4" NPT external	1/4" bayonet (barbed)	90° elbow ¼" bayonet
Catalog Numbers					
NEMA Type 1, IP20	9013FTG1	9013FTG2	9013FTG9	9013FTG10	9013FTG20
NEMA Type 3R [1]	9013FTW1	9013FTW2	9013FTW9	9013FTW10	9013FTW20
Fluids Controlled	Water	Water	Water	Water	Water
Pressure Range					
Cut-out psig (bar)	20–65 (1.4–4.5)	20–65 (1.4–4.5)	20–65 (1.4–4.5)	20–65 (1.4–4.5)	20–65 (1.4–4.5)
Cut-in psig (bar)	—	—	—	—	—
Weight, lb (kg)	0.75 (0.340)	0.75 (0.340)	0.75 (0.340)	0.75 (0.340)	0.75 (0.340)
Supplemental Specifications (not shown under General Specifications)					
Differential psig (bar)	20 (1.4)				
Maximum Allowable Pressure psig (bar)	65 (4.5)				
Cable Entry	2 cable entries 0.88 in. (22.4 mm) with 0.84 in. (21.3 mm) across flats				
Pressure Switch Style	Diaphragm				

1 Must be mounted in a vertical position to maintain enclosure rating.

Ordering information

1. Select the catalog number from the table above.
2. Select the pressure code and add the code designation to the end of the catalog number. Ensure that the pressure code falls within the limits of the device as shown in the device listings.
3. If special features are desired, add the appropriate Form letter to the catalog number after the pressure code. Arrange the Form letters in alphabetical sequence when ordering more than one special feature.
4. Add the packaging code at the end of the sequence, after the Forms. (Sold in lots or multiple of 500; for example: 9013FTG2J21C500.) If no packaging code is indicated, the devices will be shipped individually packaged.

Pressure codes

NOTE: Existence of a code does not imply that the code is available for any or all devices.

Settings (psi)	Code
5–21	J15
8–20	J16
20–40	J20
20–50	J18
30–50	J21
40–60	J24
50–70	J33
60–80	J25
Specify pressure settings	J99

© 2011 Schneider Electric
All Rights Reserved

Flange Style	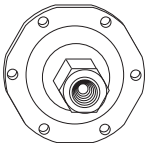	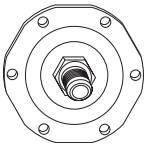	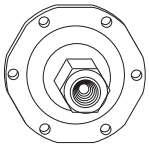	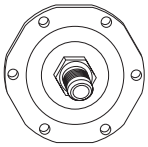
Fixed range of setting point Contacts open on rising pressure				
Differential	Fixed			
Fluid Connections	1/4" NPSF internal	1/4" NPT external	1/4" NPSF internal	1/4" NPT external
Catalog Numbers				
NEMA Type 1, IP20	9013FTG22	9013FTG29	9013FTG42	9013FTG49
NEMA Type 3R [1]	9013FSW22	9013FSW29	9013FSW42	9013FSW49
Fluids Controlled	Water	Water	Water	Water
Pressure Range				
Cut-out psig (bar)	20–50 (1.4–3.5)	20–60 (1.4–4.1)	9–30 (0.6–2.1)	9–30 (0.6–2.1)
Cut-in psig (bar)	—	—	—	—
Weight, lb (kg)	0.75 (0.340)	0.75 (0.340)	0.75 (0.340)	0.75 (0.340)
Supplemental Specifications (not shown under General Specifications)				
Differential psig (bar)	20 (1.4)	15 (1.0)	20 (1.4)	20 (1.4)
Maximum Allowable Pressure psig (bar)	50 (3.5)	60 (4.2)	30 (2.1)	30 (2.1)
Cable Entry	2 cable entries 0.88 in. (22.4 mm) with 0.84 in. (21.3 mm) across flats			
Pressure Switch Style	Diaphragm			

1 Must be mounted in a vertical position to maintain enclosure rating.

Modifications (Forms)

Description	Applies to:	Form letter
Standard pack of 500 devices per box	All Type FTG	C500
Pulsation plug	FTG2, 9	P [1]
½" conduit bushing—½" long thread—on left	All Type FTG	T
Slip-on connectors (line and load terminals)	All Type FTG, FYG	U2 [2]
Black cover	FTG, FYG	Z22

1 Nylon pulsation plug can be field installed on types having 1/4" NPSF internal connector. Catalog number 1530S6G1 is one bag of 50 plugs.

2 Standard device has slip-on connectors on the load side.

© 2011 Schneider Electric
All Rights Reserved

Type FYG, 2-Pole, 2 N.C. Contacts
Degree of Protection IP20, NEMA Type 1

Flange Style	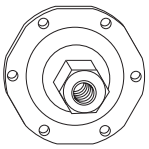	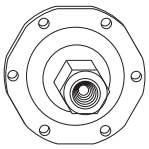	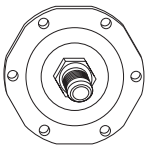	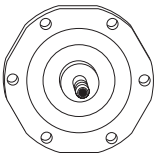	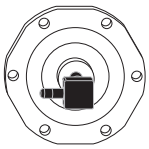
Adjustable range of setting point Contacts open on rising pressure					
Differential	Adjustable				
Fluid Connections	1/8" NPSF internal	1/4" NPSF internal	1/4" NPT external	1/4" bayonet (barbed)	90° elbow ¼" bayonet
Catalog Numbers					
NEMA Type 1, IP20	9013FYG1	9013FYG2	9013FYG9	9013FYG10	9013FYG20
NEMA Type 3R [1]	9013FYW1	9013FYW2	9013FYW9	9013FYW10	9013FYW20
Fluids Controlled	Water	Water	Water	Water	Water
Pressure Range					
Cut-out psig (bar)	25–80 (1.7–5.5)	25–80 (1.7–5.5)	25–80 (1.7–5.5)	25–80 (1.7–5.5)	25–80 (1.7–5.5)
Cut-in psig (bar)	5–60 (0.3–4.2)	5–60 (0.3–4.2)	5–60 (0.3–4.2)	5–60 (0.3–4.2)	5–60 (0.3–4.2)
Weight, lb (kg)	0.75 (0.340)	0.75 (0.340)	0.75 (0.340)	0.75 (0.340)	0.75 (0.340)
Supplemental Specifications (not shown under General Specifications)					
Differential psig (bar)	20–30 (1.4–2.1)				
Maximum Allowable Pressure psig (bar)	80 (5.5)				
Cable Entry	2 cable entries 0.88 in. (22.4 mm) with 0.84 in. (21.3 mm) across flats				
Pressure Switch Style	Diaphragm				

1 Must be mounted in a vertical position to maintain enclosure rating.

Ordering information

1. Select the catalog number from the table above.
2. Select the pressure code and add the code designation to the end of the catalog number. Ensure that the pressure code falls within the limits of the device as shown in the device listings.
3. If special features are desired, add the appropriate Form letter to the catalog number after the pressure code. Arrange the Form letters in alphabetical sequence when ordering more than one special feature.
4. Add the packaging code at the end of the sequence, after the Forms. (For example, to order a standard pack of 20 devices, specify 9013FYG2J21C20.) If no packaging code is indicated, the devices will be shipped individually packaged.

Pressure codes

NOTE: Existence of a code does not imply that the code is available for any or all devices.

Settings (psi)	Code
5–21	J15
8–20	J16
20–40	J20
20–50	J18
30–50	J21
40–60	J24
50–70	J33
60–80	J25
Specify pressure settings	J99

© 2011 Schneider Electric
All Rights Reserved

Flange Style	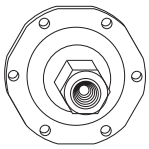	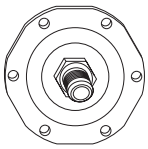	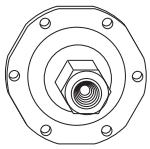	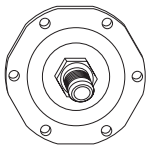	
Adjustable range of setting point Contacts open on rising pressure					
Differential	Adjustable				
Fluid Connections	1/4" NPSF internal	1/4" NPT external	1/4" NPSF internal	1/4" NPT external	—
Catalog Numbers					
NEMA Type 1, IP20	9013FYG22	9013FYG29	9013FYG42	9013FYG49	9013FYG1–20 FYG20 with M4 [1]
NEMA Type 3R [2]	9013FYW22	9013FYW29	9013FYW42	9013FYW49	—
Fluids Controlled	Water	Water	Water	Water	Water
Pressure Range					
Cut-out psig (bar)	25–50 (1.7–3.5)	20–60 (1.4–4.2)	9–40 (0.6–2.8)	9–40 (0.6–2.8)	39–80 (2.1–5.5)
Cut-in psig (bar)	10–30 (0.7–2.1)	10–45 (0.7–3.1)	3–10 (0.2–0.7)	3–10 (0.2–0.7)	19–60 (1.3–4.2)
Weight, lb (kg)	0.75 (0.340)	0.75 (0.340)	0.75 (0.340)	0.75 (0.340)	0.75 (0.340)
Supplemental Specifications (not shown under General Specifications)					
Differential psig (bar)	10–30 (0.7–2.1)	10–30 (0.7–2.1)	6–20 (0.4–1.4)	6–20 (0.4–1.4)	20–30 (1.4–2.1)
Maximum Allowable Pressure psig (bar)	50 (3.5)	60 (4.2)	40 (2.8)	40 (2.8)	80 (5.5)
Cable Entry	2 cable entries 0.88 in. (22.4 mm) with 0.84 in. (21.3 mm) across flats				
Pressure Switch Style	Diaphragm				

1 Nylon pulsation plug can be field installed on types having 1/4" NPSF internal connector. Catalog number 1530S6G1 is one bag of 50 plugs.

2 Must be mounted in a vertical position to maintain enclosure rating.

Modifications (Forms)

Description	Applies to:	Form letter
Standard pack of 20 devices per box	All Type F	C20 [1]
Maintained manual cut-out lever (Auto-Off)	FSG, FYG	M1
Low pressure cut-off (Auto-Start-Off) operates at approximately 10 psig below cut-in and will turn off the pump	FSG, FYG (Type 1–20 only)	M4
Pulsation plug (standard on FYG4)	FYG2, 9	P [2]
Salt water flange (¼ NPSF internal only)	All Type F	Q
½" conduit bushing—½" long thread—on left	All Type F	T
Slip-on connectors (load side terminals only)	FSG, FYG	U
Slip-on connectors (line and load side terminals)	FSG, FYG	U2
Black cover	FSG, FYG	Z22

1 Additional bulk packages are available. See Table 7 on page 37.

2 Nylon pulsation plug can be field installed on types having 1/4" NPSF internal connector. Catalog number 1530S6G1 is one bag of 50 plugs.

© 2011 Schneider Electric
All Rights Reserved

Type FRG, 1- or 2-Pole, 2 N.O. Contacts
Degree of Protection IP20, NEMA Type 1

Flange Style	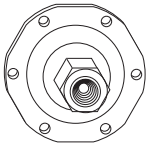	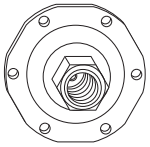	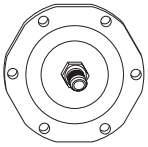	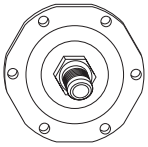	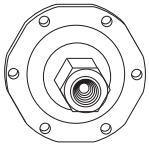	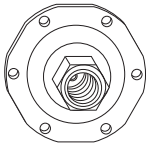
Adjustable range of setting point Contacts open on falling pressure						
Differential	Adjustable					
Fluid Connections	1/4" NPSF internal	3/8" NPSF internal	1/4" flare	1/4" NPT external	1/4" NPSF internal	3/8" NPSF internal
Catalog Numbers						
1-pole NEMA Type 1, IP20	9013FRG12	9013FRG13	9013FRG18	9013FRG19	9013FRG32	9013FRG33
2-pole NEMA Type 1, IP20	9013FRG2	9013FRG3	9013FRG8	9013FRG9	9013FRG22	9013FRG23
Fluids Controlled	Water	Water	Water	Water	Water	Water
Pressure Range						
Cut-out psig (bar)	8–45 (0.6–3.1)	8–45 (0.6–3.1)	8–45 (0.6–3.1)	8–45 (0.6–3.1)	4–25 (0.3–1.7)	4–25 (0.3–1.7)
Cut-in psig (bar)	23–65 (1.6–4.5)	23–65 (1.6–4.5)	23–65 (1.6–4.5)	23–65 (1.6–4.5)	10–45 (0.7–3.1)	10–45 (0.7–3.1)
Weight, lb (kg)	0.75 (0.340)	0.75 (0.340)	0.75 (0.340)	0.75 (0.340)	0.75 (0.340)	0.75 (0.340)
Supplemental Specifications (not shown under General Specifications)						
Differential psig (bar)	15–30 (1.0–2.1)	15–30 (1.0–2.1)	15–30 (1.0–2.1)	15–30 (1.0–2.1)	6–20 (0.4–1.4)	6–20 (0.4–1.4)
Maximum Allowable Pressure psig (bar)	65 (4.5)	65 (4.5)	65 (4.5)	65 (4.5)	45 (3.1)	45 (3.1)
Cable Entry	2 cable entries 0.88 in. (22.4 mm) with 0.84 in. (21.3 mm) across flats					
Pressure Switch Style	Diaphragm					

Ordering information

1. Select the catalog number from the table above.
2. Select the pressure code and add the code designation to the end of the catalog number. Ensure that the pressure code falls within the limits of the device as shown in the device listings.
3. If special features are desired, add the appropriate Form letter to the catalog number after the pressure code. Arrange the Form letters in alphabetical sequence when ordering more than one special feature.
4. Add the packaging code at the end of the sequence, after the Forms. (For example, to order a standard pack of 20 devices, specify 9013FRG2J21MIC20.) If no packaging code is indicated, the devices will be shipped individually packaged.

Pressure codes

NOTE: Existence of a code does not imply that the code is available for any or all devices.

Settings (psi)	Code
8.5–5.5	J17
10–5	J36
22–12	J22
22–16	J19
35–20	J70
40–20	J23
50–30	J35
80–60	J32
100–80	J51
150–120	J64
Specify pressure settings	J99

PUMPTROL™

© 2011 Schneider Electric
All Rights Reserved

Flange Style	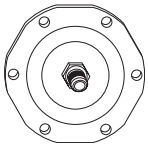	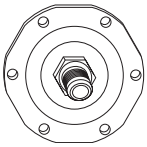	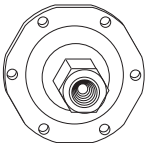	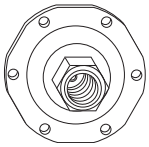	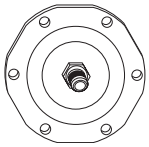	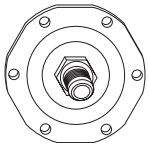
Adjustable range of setting point Contacts open on falling pressure						
Differential	Adjustable	Adjustable	Fixed	Fixed	Fixed	Fixed
Fluid Connections	1/4" flare	1/4" NPT external	1/4" NPSF internal	3/8" NPSF internal	1/4" flare	1/4" NPT external
Catalog Numbers						
1-pole NEMA Type 1, IP20	9013FRG38	9013FRG39	9013FRG52	9013FRG53	9013FRG58	9013FRG59
2-pole NEMA Type 1, IP20	9013FRG28	9013FRG29	9013FRG42	9013FRG43	9013FRG48	9013FRG49
Fluids Controlled	Water	Water	Water	Water	Water	
Pressure Range						
Cut-out psig (bar)	4–25 (0.3–1.7)	4–25 (0.3–1.7)	1–11 (0.1–0.8)	1–11 (0.1–0.8)	1–11 (0.1–0.8)	1–11 (0.1–0.8)
Cut-in psig (bar)	10–45 (0.7–3.1)	10–45 (0.7–3.1)	6–14 (0.4–1.0)	6–14 (0.4–1.0)	6–14 (0.4–1.0)	6–14 (0.4–1.0)
Weight, lb (kg)	0.75 (0.340)	0.75 (0.340)	0.75 (0.340)	0.75 (0.340)	0.75 (0.340)	0.75 (0.340)
Supplemental Specifications (not shown under General Specifications)						
Differential psig (bar)	6–20 (0.4–1.4)	6–20 (0.4–1.4)	5 (0.3)	5 (0.3)	5 (0.3)	5 (0.3)
Maximum Allowable Pressure psig (bar)	45 (3.1)	45 (3.1)	14 (1.0)	14 (1.0)	14 (1.0)	14 (1.0)
Cable Entry	2 cable entries 0.88 in. (22.4 mm) with 0.84 in. (21.3 mm) across flats					
Pressure Switch Style	Diaphragm					

Modifications (Forms)

Description	Applies to:	Form letter
Standard pack of 20 devices per box	All Type F	C20 [1]
1 N.O. / 1 N.C. contact	FRG (2-pole only)	H
Momentary manual cut-in lever (Auto-Start)	FRG2–59 only	M3
Maintained manual cut-in lever (Auto-On)	FRG2–59 only	M5
Pulsation plug	FSG2, 9	P [2]
Salt water flange (¼ NPSF internal only)	All Type F	Q
½" conduit bushing—½" long thread—on left	All Type F	T
Black cover	FSG, FYG, FRG	Z22

1 Additional bulk packages are available. See Table 7 on page 37.

2 Nylon pulsation plug can be field installed on types having 1/4" NPSF internal connector. Catalog number 1530S6G1 is one bag of 50 plugs.

© 2011 Schneider Electric
All Rights Reserved

Type FRG, 1- or 2-Pole, 2 N.O. Contacts
Degree of Protection IP20, NEMA Type 1

Flange Style	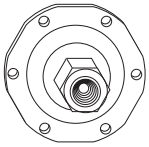	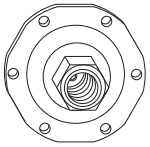	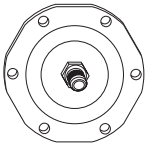	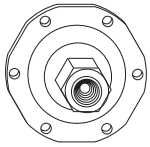	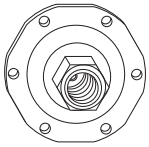	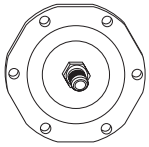
Adjustable range of setting point Contacts open on falling pressure						
Differential	Adjustable					
Fluid Connections	1/4" NPSF internal	3/8" NPSF internal	1/4" flare	1/4" NPSF internal	3/8" NPSF internal	1/4" flare
Catalog Numbers						
1-pole NEMA Type 1, IP20	9013FRG72	9013FRG73	9013FRG78	9013FRG92	9013FRG93	9013FRG98
2-pole NEMA Type 1, IP20	9013FRG62	9013FRG63	9013FRG68	9013FRG82	9013FRG83	9013FRG88
Fluids Controlled	Water	Water	Water	Water	Water	Water
Pressure Range						
Cut-out psig (bar)	20–75 (1.4–5.2)	20–75 (1.4–5.2)	20–75 (1.4–5.2)	35–120 (2.4–8.3)	35–120 (2.4–8.3)	35–120 (2.4–8.3)
Cut-in psig (bar)	40–100 (2.8–6.9)	40–100 (2.8–6.9)	40–100 (2.8–6.9)	65–150 (4.5–10.3)	65–150 (4.5–10.3)	65–150 (4.5–10.3)
Weight, lb (kg)	0.75 (0.340)	0.75 (0.340)	0.75 (0.340)	0.75 (0.340)	0.75 (0.340)	0.75 (0.340)
Supplemental Specifications (not shown under General Specifications)						
Differential psig (bar)	20–30 (1.4–2.1)	20–30 (1.4–2.1)	20–30 (1.4–2.1)	30–45 (2.1–3.1)	30–45 (2.1–3.1)	30–45 (2.1–3.1)
Maximum Allowable Pressure psig (bar)	100 (6.9)	100 (6.9)	100 (6.9)	150 (10.3)	150 (10.3)	150 (10.3)
Cable Entry	2 cable entries 0.88 in. (22.4 mm) with 0.84 in. (21.3 mm) across flats					
Pressure Switch Style	Diaphragm					

Ordering information

1. Select the catalog number from the table above.
2. Select the pressure code and add the code designation to the end of the catalog number. Ensure that the pressure code falls within the limits of the device as shown in the device listings.
3. If special features are desired, add the appropriate Form letter to the catalog number after the pressure code. Arrange the Form letters in alphabetical sequence when ordering more than one special feature.
4. Add the packaging code at the end of the sequence, after the Forms. (For example, to order a standard pack of 20 devices, specify 9013FRG72J23C20.) If no packaging code is indicated, the devices will be shipped individually packaged.

Pressure codes

NOTE: Existence of a code does not imply that the code is available for any or all devices.

Settings (psi)	Code
8.5–5.5	J17
10–5	J36
22–12	J22
22–16	J19
35–20	J70
40–20	J23
50–30	J35
80–60	J32
100–80	J51
150–120	J64
Specify pressure settings	J99

PUMPTROL™

© 2011 Schneider Electric
All Rights Reserved

Flange Style

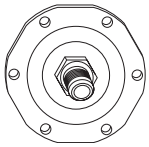

Adjustable range of setting point Contacts open on falling pressure	
Differential	Adjustable
Fluid Connections	1/4" NPT external
Catalog Numbers	
1-pole **NEMA Type 1, IP20**	9013FRG99
2-pole **NEMA Type 1, IP20**	9013FRG89
Fluids Controlled	Water
Pressure Range	
Cut-out psig (bar)	35–120 (2.4–8.3)
Cut-in psig (bar)	60–150 (4.14–10.3)
Weight, lb (kg)	0.75 (0.340)
Complementary Characteristics **(not shown under general characteristics)**	
Differential psig (bar)	30–45 (2.1–3.1)
Maximum Allowable Pressure psig (bar)	150 (10.3)
Cable Entry	2 cable entries 0.88 in. (22.4 mm) with 0.84 in. (21.3 mm) across flats
Pressure Switch Style	Diaphragm

Modifications (Forms)

Description	Applies to:	Form letter
Standard pack of 20 devices per box	All Type F	C20 [1]
1 N.O. / 1 N.C. contact	FRG (2-pole only)	H
Momentary manual cut-in lever (Auto-Start)	FRG2–59 only	M3
Maintained manual cut-in lever (Auto-On)	FRG2–59 only	M5
Pulsation plug	FSG2, 9	P [2]
Salt water flange (¼ NPSF internal only)	All Type F	Q
½" conduit bushing—½" long thread—on left	All Type F	T
Black cover	FSG, FYG, FRG	Z22

1 Additional bulk packages are available. See Table 7 on page 37.

2 Nylon pulsation plug can be field installed on types having 1/4" NPSF internal connector. Catalog number 1530S6G1 is one bag of 50 plugs.

© 2011 Schneider Electric
All Rights Reserved

Type FHG, 2-Pole, 2 N.C. Contacts
Degree of Protection IP20, NEMA Type 1

Flange Style	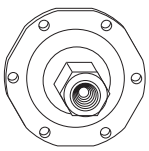	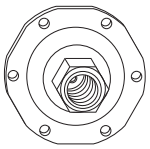	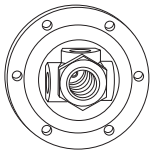	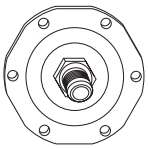	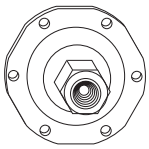	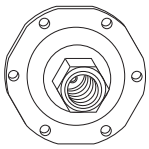
Adjustable range of setting point Contacts open on rising pressure						
Differential	Fixed					
Pressure Connections	1/4" NPSF internal	3/8" NPSF internal	1/4" 4-way Flange	1/4" NPT external	1/4" NPSF internal	3/8" NPSF internal
Catalog Numbers						
Lower hp, 2-pole NEMA Type 1, IP20	9013FHG2	9013FHG3	9013FHG4	9013FHG9	9013FHG12	9013FHG13
Higher hp, 2-pole NEMA Type 1, IP20	9013FHG22	—	9013FHG24	9013FHG29	9013FHG32	9013FHG33
Controls	Air	Air	Air	Air	Air	Air
Pressure Range						
Adjustable cut-out psig (bar)	40–100 (2.8–6.9)	40–100 (2.8–6.9)	40–100 (2.8–6.9)	40–100 (2.8–6.9)	70–150 (4.8–10.3)	70–150 (4.8–10.3)
Weight, lb (kg)	0.75 (0.340)	0.75 (0.340)	0.75 (0.340)	0.75 (0.340)	0.75 (0.340)	0.75 (0.340)
Supplemental Specifications (not shown under General Specifications)						
Differential, Fixed psig (bar)	20 (1.4)	20 (1.4)	20 (1.4)	20 (1.4)	30 (2.1)	30 (2.1)
Maximum Allowable Pressure psig (bar)	100 (6.9)	100 (6.9)	100 (6.9)	100 (6.9)	150 (10.3)	150 (10.3)
Cable Entry	2 cable entries 0.88 in. (22.4 mm) with 0.84 in. (21.3 mm) across flats					
Pressure Switch Style	Diaphragm					

Ordering information

1. Select the catalog number from the table above.
2. Select the pressure code and add the code designation to the end of the catalog number. Ensure that the pressure code falls within the limits of the device as shown in the device listings.
3. If special features are desired, add the appropriate Form letter to the catalog number after the pressure code. Arrange the Form letters in alphabetical sequence when ordering more than one special feature.
4. Add the packaging code at the end of the sequence, after the Forms. (For example, to order a standard pack of 20 devices, specify 9013FHG19J52MIXC20.) If no packaging code is indicated, the devices will be shipped individually packaged.

Pressure codes

NOTE: Existence of a code does not imply that the code is available for any or all devices.

Settings (psi)	Code
Off at 80	J43
Off at 100	J27
Off at 110	J37
Off at 115	J38
Off at 120	J69
Off at 125	J52
Off at 135	J39
Off at 140	J68
Off at 150	J55
Off at 155	J40
Off at 175	J59
Specify pressure settings	J99

PUMPTROL™

© 2011 Schneider Electric
All Rights Reserved

Flange Style	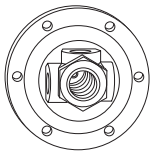	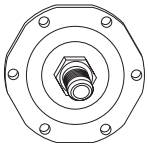	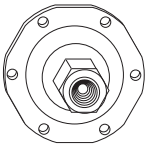	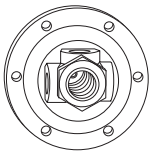	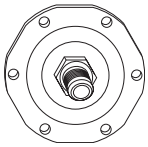
Adjustable range of setting point Contacts open on rising pressure					
Differential	Fixed				
Pressure Connections	4-way Flange	1/4" NPT external	1/4" 4-way Flange	1/4" 4-way Flange	1/4" 4-way Flange
Catalog Numbers					
Lower hp, 2 pole NEMA Type 1, IP20	9013FHG14	9013FHG19	9013FHG42	9013FHG44	9013FHG49
Higher hp, 2-pole NEMA Type 1, IP20	9013FHG34	9013FHG19	9013FHG52	9013FHG54	9013FHG59
Controls	Air	Air	Air	Air	Air
Pressure Range					
Adjustable cut-out psig (bar)	70–150 (4.8–10.3)	70–150 (4.8–10.3)	100–200 (6.9–13.8)	100–200 (6.9–13.8)	100–200 (6.9–13.8)
Weight, lb (kg)	0.75 (0.340)	0.75 (0.340)	0.75 (0.340)	0.75 (0.340)	0.75 (0.340)
Supplemental Specifications (not shown under General Specifications)					
Differential, Fixed psig (bar)	30 (2.1)	30 (2.1)	40 (2.8)	40 (2.8)	40 (2.8)
Maximum Allowable Pressure psig (bar)	150 (10.3)	150 (10.3)	200 (13.8)	200 (13.8)	200 (13.8)
Cable Entry	2 cable entries 0.88 in. (22.4 mm) with 0.84 in. (21.3 mm) across flats				
Pressure Switch Style	Diaphragm				

Modifications (Forms)

NOTE: Modifications G4 and Z22 can be field installed, all others are factory installed only.

Description	Form letter
Standard pack of 20 devices per box	C20 [1]
Addition of a second ground screw	G4
Maintained manual cut-out lever (Auto-Off)	M1
Pulsation plug (copper)	P
½" conduit bushing—½" long thread—on left	T
Slip-on connectors (load side terminals only)	U
Slip-on connectors (line and load side terminals)	U2
Factory sealed range stud	W
Two-way pressure release valve	X
Quick connect two-way pressure release valve (for use with Polyflow Tubing)	X1
Black cover	Z22

1 Additional bulk packages are available. See Table 7 on page 37.

© 2011 Schneider Electric
All Rights Reserved

Table 7: Bulk Package Form Numbers for 9013F Pressure Switches

Description	Bulk Package Quantity	16	20	40	50	400	500
Product without Forms M1, M3, M4, M5, T, X1	9013FHG (without 1/4" four-way)	—	C20	—	C50	—	—
	9013FHG4, 14, 24, 34, 44, 54 (with 1/4" 4-way flange)	—	C20	—	C50	C400	—
	9013FRG	—	C20	—	C50	—	—
	9013FSG	—	C20	—	C50	—	—
	9013FYG	—	C20	—	C50	—	—
Product with Forms M1, M3, M4, M5	9013FHG (without 1/4" four-way)	—	C20	C40	—	—	—
	9013FHG4, 14, 24, 34, 44, 54 (with 1/4" 4-way flange)	—	C20	C40	—	—	—
	9013FRG	—	C20	C40	—	—	—
	9013FSG	—	C20	C40	—	—	—
	9013FYG	—	C20	C40	—	—	—
Product with Forms T, X1	9013FHG (without 1/4" four-way)	C16	—	C40	—	—	—
	9013FHG4, 14, 24, 34, 44, 54 (with 1/4" 4-way flange)	C16	—	C40	—	—	—
	9013FRG	C16	—	C40	—	—	—
	9013FSG	C16	—	C40	—	—	—
	9013FYG	C16	—	C40	—	—	—
9013FHG9 Special with Extended Flange		C16	—	—	—	—	C500

© 2011 Schneider Electric
All Rights Reserved

Type G, 2-Pole, 2 N.C. Contacts
Degree of Protection IP20, NEMA Type 1, 3R, 7, and 9

Flange Style	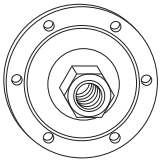	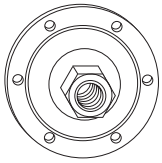	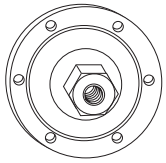	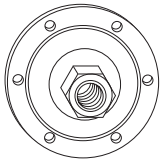	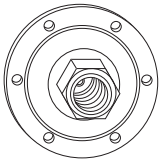	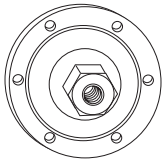
Adjustable range of setting point Contacts open on rising pressure						
Fluid Connections	1/4" NPSF internal	1/4" NPSF internal	1/8" NPSF internal	1/4" NPSF internal	3/8" NPSF internal	1/8" NPSF internal
Catalog Numbers						
NEMA Type 1, IP20	9013GMG2	—	9013GSG1	9013GSG2	9013GSG3	—
NEMA Type 3R [1]	—	9013GSB2	—	—	—	—
NEMA Type 7, 9	—	—	—	—	—	9013GSR1
Fluids / Pressure Controls	Water or air	Water or air	Water or air	Water or air	Water or air	Water or air
Pressure Range						
Cut-out psig (bar)	10–35 (0.7–2.4)	20–80 (1.4–5.5)	20–80 (1.4–5.5)	20–80 (1.4–5.5)	20–80 (1.4–5.5)	20–80 (1.4–5.5)
Cut-in psig (bar)	5.5–30.5 (0.4–2.1)	5–60 (0.4–4.2)	5–60 (0.4–4.2)	5–60 (0.4–4.2)	5–60 (0.4–4.2)	5–60 (0.4–4.2)
Weight, lb (kg)	2 (0.91)	2 (0.91)	2 (0.91)	2 (0.91)	2 (0.91)	8 (3.62)
Supplemental Specifications (not shown under General Specifications)						
Differential psig (bar)	4–8 (0.3–0.6)	15–30 (1.0–2.1)	15–30 (1.0–2.1)	15–30 (1.0–2.1)	15–30 (1.0–2.1)	20–40 (1.4–2.8)
Maximum Allowable Pressure psig (bar)	35 (2.4)	80 (5.5)	80 (5.5)	80 (5.5)	80 (5.5)	80 (5.5)
Cable Entry	3 knockouts for 1/2 in. conduit	3 knockouts for 1/2 in. conduit	3 knockouts for 1/2 in. conduit	3 knockouts for 1/2 in. conduit	3 knockouts for 1/2 in. conduit	2 conduit entries 3/4"-14 NTP
Pressure Switch Style	Diaphragm					

1 Must be mounted in vertical position to maintain enclosure rating.

Ordering information

1. Select the catalog number from the table above.
2. Select the pressure code and add the code designation to the end of the catalog number. Ensure that the pressure code falls within the limits of the device as shown in the device listings.
3. If special features are desired, add the appropriate Form letter to the catalog number after the pressure code. Arrange the Form letters in alphabetical sequence when ordering more than one special feature.
4. Add the packaging code at the end of the sequence, after the Forms. (For example, to order a standard pack of 10 devices, specify 9013GHG2J99RZC10.) If no packaging code is indicated, the devices will be shipped individually packaged.
   To order a standard pack of 10 devices per box C10 (available on GHB, GHG, GSB, and GSG) see page 39 for Form C10.

Pressure codes

NOTE: Existence of a code does not imply that the code is available for any or all devices.

Settings (psi)	Code	Settings (psi)	Code
20–40	J20	110–150	J56
30–50	J21	120–150	J57
40–20	J23	125–150	J58
40–60	J24	125–175	J60
60–80	J25	130–175	J61
70–90	J26	140–170	J66
70–100	J28	140–175	J62
75–100	J29	145–175	J63
80–100	J30	150–120	J64
90–120	J31	150–175	J67
100–80	J51	215–250	J65
100–125	J53	Specify pressure settings	J99
110–125	J54	—	—

© 2011 Schneider Electric
All Rights Reserved

Flange Style	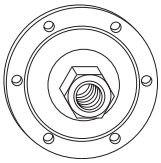	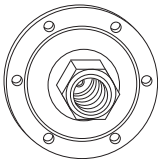	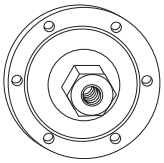	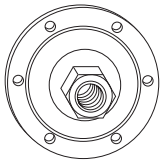	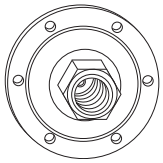	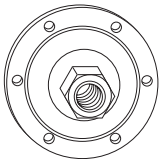
Adjustable range of setting point Contacts open on rising pressure						
Fluid Connections	1/4" NPSF internal	3/8" NPSF internal	1/8" NPSF internal	1/4" NPSF internal	3/8" NPSF internal	1/4" NPSF internal
Catalog Numbers						
NEMA Type 3R	—	—	—	—	—	9013GHB2
NEMA Type 4	—	—	9013GSW1	9013GSW2	9013GSW3	—
NEMA Type 7, 9	9013GSR2	9013GSR3	—	—	—	—
Fluids / Pressure Controls	Water or air	Water or air	Water or air	Water or air	Water or air	Water or air
Pressure Range						
Cut-out psig (bar)	20–80 (1.4–5.5)	20–80 (1.4–5.5)	20–80 (1.4–5.5)	20–80 (1.4–5.5)	20–80 (1.4–5.5)	60–200 (4.1–13.8)
Cut-in psig (bar)	5–50 (0.4–3.5)	5–50 (0.4–3.5)	5–50 (0.4–3.5)	5–50 (0.4–3.5)	5–50 (0.4–3.5)	40–170 (2.8–12)
Weight, lb (kg)	8 (3.62)	8 (3.62)	8 (3.62)	8 (3.62)	8 (3.62)	2 (0.91)
Supplemental Specifications (not shown under General Specifications)						
Differential psig (bar)	20–40 (1.4–2.8)	20–40 (1.4–2.8)	20–40 (1.4–2.8)	20–40 (1.4–2.8)	20–40 (1.4–2.8)	20–40 (1.4–2.8)
Maximum Allowable Pressure psig (bar)	80 (5.5)	80 (5.5)	80 (5.5)	80 (5.5)	80 (5.5)	200 (13.8)
Cable Entry	2 conduit entries 3/4"-14 NTP	2 conduit entries 3/4"-14 NTP	2 conduit entries 3/4"-14 NTP	2 conduit entries 3/4"-14 NTP	2 conduit entries 3/4"-14 NTP	3 knockouts for 1/2 in. conduit
Pressure Switch Style	Diaphragm					

Modifications (Forms)

NOTE: Factory installed only.

Description	Applies to:	Form letter
Standard pack of 10 devices per box	GHB, GHG, GSB, GSG	C10
3-way lever (On-Auto-Off) not compatible with Form X	GHG, GMG, GSG	E
1 N.O. / 1 N.C. contact	All Type G	H [1]
Pulsation plug (copper)	All Type G	P
Reverse action / 2 N.O. contacts	All Type G	R [1]
Slip-on connectors (load side terminals only)	All Type G	U
Slip-on connectors (line and load side terminals)	All Type G	U2
2-way pressure release valve (not compatible with Form E)	GHB, GMG, GSB, GHG, GSG, GHR, GHW, GSR, GSW	X
¼" male pipe thread on pressure connection	All Type G	Z
½" - 14 NPT external ¼" - 18 NPT internal	All Type G	Z16
3/8“ male pipe thread on pressure connection	All Type G	Z23

1 Cannot order Form R in combination with Form H.

© 2011 Schneider Electric
All Rights Reserved

Flange Style	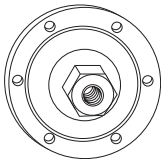	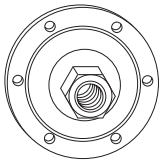	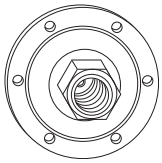	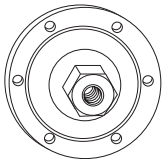	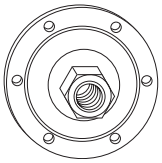	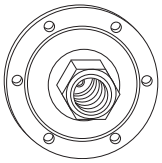
Adjustable range of setting point Contacts open on rising pressure						
Fluid Connections	1/8" NPSF internal	1/4" NPSF internal	3/8" NPSF internal	1/8" NPSF internal	1/4" NPSF internal	3/8" NPSF internal
Catalog Numbers						
NEMA Type 1, IP20	9013GHG1	9013GHG2	9013GHG3	—	—	—
NEMA Type 7, 9	—	—	—	9013GHR1	9013GHR2	9013GHR3
Fluids / Pressure Controls	Water or air	Water or air	Water or air	Water or air	Water or air	Water or air
Pressure Range						
Cut-out psig (bar)	60–200 (4.1–13.8)	60–200 (4.1–13.8)	60–200 (4.1–13.8)	65–200 (4.5–13.8)	65–200 (4.5–13.8)	65–200 (4.5–13.8)
Cut-in psig (bar)	40–170 (2.8–12)	40–170 (2.8–12)	40–170 (2.8–12)	35–150 (2.4–10.3)	35–150 (2.4–10.3)	35–150 (2.4–10.3)
Weight, lb (kg)	2 (0.91)	2 (0.91)	2 (0.91)	8 (3.62)	8 (3.62)	8 (3.62)
Supplemental Specifications (not shown under General Specifications)						
Differential psig (bar)	20–40 (1.4–2.8)	20–40 (1.4–2.8)	20–40 (1.4–2.8)	30–50 (2.1–3.5)	30–50 (2.1–3.5)	30–50 (2.1–3.5)
Maximum Allowable Pressure psig (bar)	80 (5.5)	80 (5.5)	80 (5.5)	80 (5.5)	80 (5.5)	200 (13.8)
Cable Entry	3 knockouts for 1/2 in. conduit	3 knockouts for 1/2 in. conduit	3 knockouts for 1/2 in. conduit	2 conduit entries 3/4"-14 NTP	2 conduit entries 3/4"-14 NTP	2 conduit entries 3/4"-14 NTP
Pressure Switch Style	Diaphragm					

Ordering information

1. Select the catalog number from the table above.
2. Select the pressure code and add the code designation to the end of the catalog number. Ensure that the pressure code falls within the limits of the device as shown in the device listings.
3. If special features are desired, add the appropriate Form letter to the catalog number after the pressure code. Arrange the Form letters in alphabetical sequence when ordering more than one special feature.
4. Add the packaging code at the end of the sequence, after the Forms. (For example, to order a standard pack of 10 devices, specify 9013GHG2J99RZC10.) If no packaging code is indicated, the devices will be shipped individually packaged.
   To order a standard pack of 10 devices per box C10 (available on GHB, GHG, GSB, and GSG) see page 39 for Form C10.

Pressure codes

NOTE: Existence of a code does not imply that the code is available for any or all devices.

Settings (psi)	Code	Settings (psi)	Code
20–40	J20	110–150	J56
30–50	J21	120–150	J57
40–20	J23	125–150	J58
40–60	J24	125–175	J60
60–80	J25	130–175	J61
70–90	J26	140–170	J66
70–100	J28	140–175	J62
75–100	J29	145–175	J63
80–100	J30	150–120	J64
90–120	J31	150–175	J67
100–80	J51	215–250	J65
100–125	J53	Specify pressure settings	J99
110–125	J54	—	—

© 2011 Schneider Electric
All Rights Reserved

Flange Style	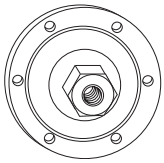	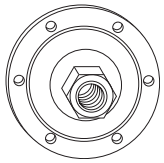	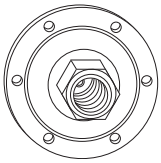	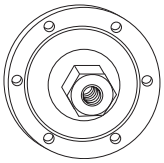	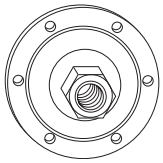	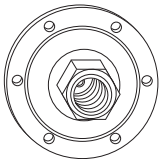
Adjustable range of setting point Contacts open on rising pressure						
Fluid Connections	1/8" NPSF internal	1/4" NPSF internal	3/8" NPSF internal	1/4" NPSF internal	1/8" NPSF internal	1/4" NPSF internal
Catalog Numbers						
NEMA Type 1, IP20	—	—	—	—	9013GHG4	9013GHG5
NEMA Type 3R	—	—	—	9013GHB5	—	—
NEMA Type 4	9013GHW1	9013GHW2	9013GWG3	—	—	—
Fluids / Pressure Controls	Water or air	Water or air	Water or air	Water or air	Water or air	Water or air
Pressure Range						
Cut-out psig (bar)	65–200 (4.5–13.8)	65–200 (4.5–13.8)	65–200 (4.5–13.8)	80–250 (5.5–17.2)	80–250 (5.5–17.2)	80–250 (5.5–17.2)
Cut-in psig (bar)	35–150 (2.4–10.3)	35–150 (2.4–10.3)	35–150 (2.4–10.3)	32–215 (2.2–14.8)	32–215 (2.2–14.8)	32–215 (2.2–14.8)
Weight, lb (kg)	8 (3.62)	8 (3.62)	8 (3.62)	2 (0.91)	2 (0.91)	2 (0.91)
Supplemental Specifications (not shown under General Specifications)						
Differential psig (bar)	30–50 (2.1–3.5)	30–50 (2.1–3.5)	30–50 (2.1–3.5)	25–45 (1.7–3.1)	25–45 (1.7–3.1)	25–45 (1.7–3.1)
Maximum Allowable Pressure psig (bar)	200 (13.8)	200 (13.8)	200 (13.8)	250 (17.2)	250 (17.2)	250 (17.2)
Cable Entry	2 conduit entries 3/4"-14 NTP	2 conduit entries 3/4"-14 NTP	2 conduit entries 3/4"-14 NTP	3 knockouts for 1/2 in. conduit	3 knockouts for 1/2 in. conduit	3 knockouts for 1/2 in. conduit
Pressure Switch Style	Diaphragm					

Modifications (Forms)

NOTE: Factory installed only.

Description	Applies to:	Form letter
Standard pack of 10 devices per box	GHB, GHG, GSB, GSG	C10
3-way lever (On-Auto-Off) not compatible with Form X	GHG, GMG, GSG	E
1 N.O. / 1 N.C. contact	All Type G	H [1]
Pulsation plug (copper)	All Type G	P
Reverse action / 2 N.O. contacts	All Type G	R [1]
Slip-on connectors (load side terminals only)	All Type G	U
Slip-on connectors (line and load side terminals)	All Type G	U2
2-way pressure release valve (not compatible with Form E)	GHB, GMG, GSB, GHG, GSG, GHR, GHW, GSR, GSW	X
¼" male pipe thread on pressure connection	All Type G	Z
½" - 14 NPT external ¼" - 18 NPT internal	All Type G	Z16
3/8“ male pipe thread on pressure connection	All Type G	Z23

1 Cannot order Form R in combination with Form H.

© 2011 Schneider Electric
All Rights Reserved

Flange Style	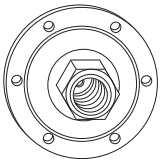	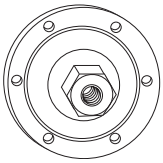	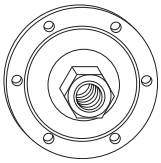	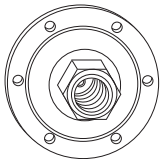	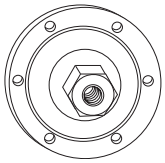	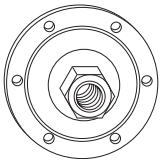
Adjustable range of setting point Contacts open on rising pressure						
Fluid Connections	3/8" NPSF internal	1/8" NPSF internal	1/4" NPSF internal	3/8" NPSF internal	1/8" NPSF internal	1/4" NPSF internal
Catalog Numbers						
NEMA Type 1, IP20	9013GHG6	—	—	—	—	—
NEMA Type 4	—	—	—	—	9013GHW4	9013GHW5
NEMA Type 7, 9	—	9013GHR4	9013GHR5	9013GHR6	—	—
Fluids / Pressure Controls	Water or air	Water or air	Water or air	Water or air	Water or air	Water or air
Pressure Range						
Cut-out psig (bar)	80–250 (5.5–17.2)	80–250 (5.5–17.2)	80–250 (5.5–17.2)	80–250 (5.5–17.2)	80–250 (5.5–17.2)	80–250 (5.5–17.2)
Cut-in psig (bar)	32–215 (2.2–14.8)	30–190 (2.0–13.1)	30–190 (2.0–13.1)	30–190 (2.0–13.1)	30–190 (2.0–13.1)	30–190 (2.0–13.1)
Weight, lb (kg)	2 (0.91)	8 (3.62)	8 (3.62)	8 (3.62)	8 (3.62)	8 (3.62)
Supplemental Specifications (not shown under General Specifications)						
Differential psig (bar)	25–45 (1.7–3.1)	40–60 (2.8–4.1)	40–60 (2.8–4.1)	40–60 (2.8–4.1)	40–60 (2.8–4.1)	40–60 (2.8–4.1)
Maximum Allowable Pressure psig (bar)	250 (17.2)	250 (17.2)	250 (17.2)	250 (17.2)	250 (17.2)	250 (17.2)
Cable Entry	3 knockouts for 1/2 in. conduit	2 conduit entries 3/4"-14 NTP	2 conduit entries 3/4"-14 NTP	2 conduit entries 3/4"-14 NTP	2 conduit entries 3/4"-14 NTP	2 conduit entries 3/4"-14 NTP
Pressure Switch Style	Diaphragm					

Ordering information

1. Select the catalog number from the table above.
2. Select the pressure code and add the code designation to the end of the catalog number. Ensure that the pressure code falls within the limits of the device as shown in the device listings.
3. If special features are desired, add the appropriate Form letter to the catalog number after the pressure code. Arrange the Form letters in alphabetical sequence when ordering more than one special feature.
4. Add the packaging code at the end of the sequence, after the Forms. (For example, to order a standard pack of 10 devices, specify 9013GHG2J99RZC10.) If no packaging code is indicated, the devices will be shipped individually packaged.
   To order a standard pack of 10 devices per box C10 (available on GHB, GHG, GSB, and GSG) see page 39 for Form C10.

Pressure codes

NOTE: Existence of a code does not imply that the code is available for any or all devices.

Settings (psi)	Code	Settings (psi)	Code
20–40	J20	110–150	J56
30–50	J21	120–150	J57
40–20	J23	125–150	J58
40–60	J24	125–175	J60
60–80	J25	130–175	J61
70–90	J26	140–170	J66
70–100	J28	140–175	J62
75–100	J29	145–175	J63
80–100	J30	150–120	J64
90–120	J31	150–175	J67
100–80	J51	215–250	J65
100–125	J53	Specify pressure settings	J99
110–125	J54	—	—

© 2011 Schneider Electric
All Rights Reserved

Flange Style

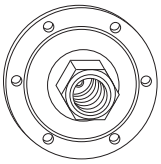

Adjustable range of setting point Contacts open on rising pressure	
Fluid Connections	3/8" NPSF internal
Catalog Numbers	
NEMA Type 4	9013GHW6
NEMA Type 7, 9	—
Fluids / Pressure Controls	Water or air
Pressure Range	
Cut-out psig (bar)	80–250 (5.5–17.2)
Cut-in psig (bar)	30–190 (2.0–13.1)
Weight, lb (kg)	8 (3.62)
Supplemental Characteristics (not shown under General Characteristics)	
Differential psig (bar)	40–60 (2.8–4.1)
Maximum Allowable Pressure psig (bar)	250 (17.2)
Cable Entry	2 conduit entries 3/4"-14 NTP
Pressure Switch Style	Diaphragm

Modifications (Forms)

NOTE: Factory installed only.

Description	Applies to:	Form letter
Standard pack of 10 devices per box	All Type G	C10
3-way lever (On-Auto-Off) not compatible with Form X	GHG, GMG, GSG	E
1 N.O. / 1 N.C. contact	All Type G	H [1]
Pulsation plug (copper)	All Type G	P
Reverse action	All Type G	R [1]
Slip-on connectors (load side terminals only)	All Type G	U
Slip-on connectors (line and load side terminals)	All Type G	U2
2-way pressure release valve (not compatible with Form E)	GHB, GMG, GSB, GHG, GSG, GHR, GHW, GSR, GSW	X
¼" male pipe thread on pressure connection	All Type G	Z
½" - 14 NPT external ¼" - 18 NPT internal	All Type G	Z16
3/8“ male pipe thread on pressure connection	All Type G	Z23

1 Cannot order Form R in combination with Form H.

Replacement contacts and diaphragms

Description	9998 Type
Repl. Contact Kit 9013GHG, GSG, GHR, GSR, GMG Series C, all except Forms H & R	PC205
Repl. Contact Kit 9013GHG, GSG, GSR, GMG; 9036GG, GR, GW; 9037GG, GR, GW Series C, Form H only; 9016GVG, Form H	PC206
Repl. Contact Kit 9013GHG, GSG, GHR, GSR, GMG; 9036GR, GW Series C, Form R only; 9016GVG	PC207
Convoluted Diaphragm Assy. 9013GHG, GSG Series C	PC208
Diaphragm Assy. 9013GMG Series C	PC209
Diaphragm Assy. 9013GHW, GSW, GSR, GHR Series C	PC211
Repl. Contact Kit 9013FSG	PC241 [1]
Repl. Contact Kit 9013FYG	PC242 [1]
Repl. Contact Kit 9013FRG (1 pole)	PC289 [1]
Repl. Contact Kit 9013FRG (Form H)	PC290 [1]

1 Diaphragm is included.

PUMPTROL™

© 2011 Schneider Electric
All Rights Reserved

Dimensions

Type F Compressor and Water Pump Pressure Switches

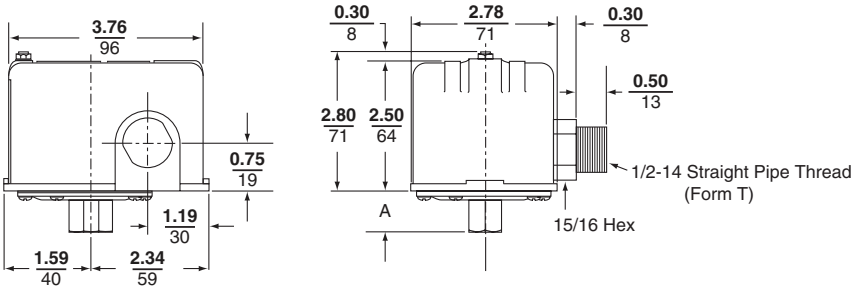

Switch Type	A Dimension, in. (mm)	
FSG1, FYG1	1-1/32	26
FHG2, 12, 22, 32, 42, 52, FRG2, FSG2, FYG2	29/32	23
FHG3, 13, 33, FRG3, FSG3, FYG3	1-9/32	33
FHG9, 19, 29, 39, 49, 59, FSG9, FYG9	1-3/32	28

Type G Compressor and Water Pump Pressure Switches

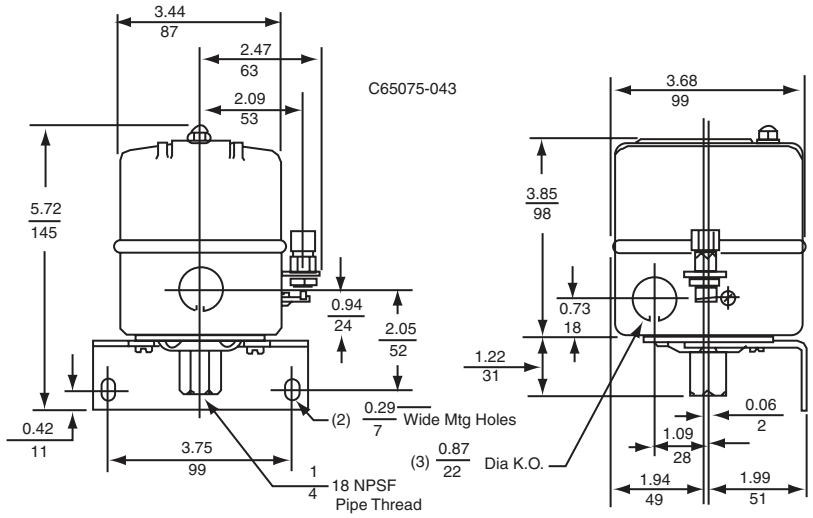

NOTE: Mounting bracket shown is available as a Class 9049 Type A-52 Kit.

Switch Type: GHG, GSG (with Form X installed)

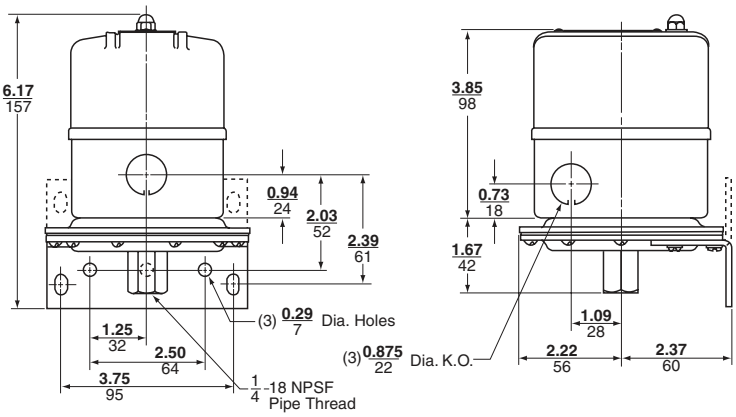

NOTE: Mounting bracket shown is available as a Class 9049 Type A-52 Kit.

Switch Type: GMG

© 2011 Schneider Electric
All Rights Reserved

Float Switches—Class 9036, 9037, and 9038

Introduction

9036DG2

Square D™ brand offers a wide range of electromechanical level control products.

- **Class 9036, Open Tank**
- **Class 9037, Closed Tank**
- **Class 9038, Mechanical Alternators**

Class 9036 Open Tank

Type D and G

9036GG

The Class 9036 Type D and G float switches are lever operated and designed for open tank applications. These switches are floor mounted, or they can be pedestal mounted using mounting plate 9049UMS1. They are available in NEMA Type 1, Type 4, or Type 7 and 9 enclosures.

Type FG

The Class 9036 Type FG30 pedestal-style sump pump switch is designed for liquid level control with electric-motor operated pumps, either directly or through a magnetic starter. It can also be used to activate alarms in liquid level control systems. The upward or downward movement of the lever arm of the float switch controls the On and Off positions corresponding to the water level changes required to turn the pump or alarm on and off.

NOTE: The rod for this device is 33.75 in. long. It cannot be lengthened.

9036FG
9049A60
9049A61

© 2011 Schneider Electric
All Rights Reserved

Class 9037 Closed Tank

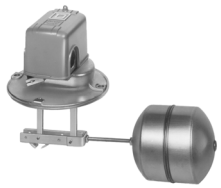

9037E

Type E

The Class 9037 Type E switches are flange mounted. Float movement is transmitted through a quad ring seal. Each switch consists of a basic switch, float rod, and float. The switch can be configured in the field for contacts that open on liquid rise or close on liquid rise. These switches are used for top mounted or side mounted, closed tank applications.

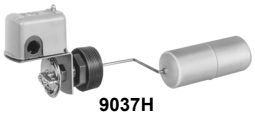

9037H

Type H

The Class 9037 Type H switches are attached to the tank by means of a 2-1/2 in. bushing. An external pointer indicates the float position within the tank when the unit is mounted. Switches come complete with stainless steel float and rod. A nitrile rubber seal, such as a Buna-N quad ring seal, is used between the float rod and the sealing connector. Normal application is at atmospheric pressure. Where higher pressures are encountered, the available Viton® seal allows the switch to withstand tank pressures up to 50 psi at ambient temperatures up to 220 °F. Occasional replacement of the quad ring seal may be necessary.

Class 9038 Mechanical Alternators

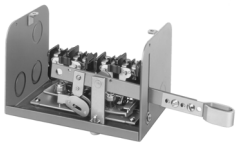

9038AG1

Type A (Open Tank)

The Class 9038 Type A Open Tank level switch is a mechanical alternator designed to provide motor alternation in the operation of two motors.

9038CG

Type C (Closed Tank, Bushing Mounted)

The Class 9038 Type C Closed Tank level switches are bushing mounted. Float movement is transmitted through a quad ring seal. Each switch consists of a basic switch, rod, and float.

Type C switches are attached to the tank by means of a 2-1/2 in. bushing. An external pointer indicates the float position within the tank when the unit is mounted. Switches come complete with bushing, stainless steel float, and rod.

Occasional replacement of the quad ring may be necessary.

9038DG
9049ER5
9049EF1

Type D (Closed Tank, Flange Mounted, Top)

Type D mechanical alternators are designed for applications where flange mounting is to be made at the top of a closed tank.

© 2011 Schneider Electric
All Rights Reserved

9036DG2

9036GG2

Selecting a Float Switch

Standard float switches have two contacts that close when the liquid rises above the designated level. This contact configuration is used for tank emptying applications. Float switches are also available with reverse (Form R) and double throw (Form H) contacts. Form R switches, used for tank filling applications, have two contacts that open when the liquid rises above the designated level. Form H switches, which can be used for both applications, have one normally open (N.O.) and one normally closed (N.C.) contact.

To select the proper Square D™ float switch, determine the following:

- Type and shape of tank (open, closed, sump, etc.)
- Enclosure requirements
  - **NEMA Type 1**: For general purpose applications intended for indoor use.
  - **NEMA Type 4**: For watertight and dusttight applications for either indoor or outdoor use.
  - **NEMA Type 7 and 9**: For explosion proof applications. Suitable for Class I, Division 1 and 2, Groups C and D and Class II, Division 1 and 2, Groups E, F, and G hazardous locations.
- Total level change required
- Mounting requirements (such as flange mounting or screw-in bushing)
- Horsepower, phase, and voltage requirements
- Float material
  - Stainless steel (SS)
  - Plastic (available on 9036FG30 and as a Form for use with diesel fuel)
- Rod material
  - Brass
  - Stainless steel (SS)
  - Aluminum (Al)

In direct motor control applications, float switch ratings must be greater than or equal to the pump motor ratings.

NOTE: Contact the Sensor Competency Center when using float switches in liquids with a specific gravity different than water (1.0).

Specify the Class and Type when ordering float switches or accessory kits.

Selecting Floats and Rods

Class 9036 and Class 9038 Type A float switches are actuated with the Class 9049 Type A line of accessories. Select the float and rod material according to the corrosiveness of the liquid used in the application. Two types of float kits are offered:

- Tapped-at-top float (Class 9049 Type A6, A6S, and A6A)
- Center-hole float (Class 9049 Type A6C, A6CS, and A6CA)

The tapped-at-top float is for applications requiring short lengths of tubing and small liquid level changes. The maximum tubing length is 12 ft (3.66 m). Adequate space must be available to allow for ceiling clearance when the level changes. The float must be buoyant enough to lift the tubing, stop collars, and switch lever. The rod has two stops, one above and one below the switch lever. The position of the stops determines the amount of water level change.

© 2011 Schneider Electric
All Rights Reserved

The center-hole float is used in applications requiring long lengths of tubing and large liquid level changes. A compensating spring, used for longer lengths of tubing, supports the weight of the tubing and stops. When a compensating spring is used, the float must be buoyant enough to lift up the switch lever and heavy enough to trip the switch lever down. The rod has four stops. The position of the stops on the rod above and below the float determines the amount of water level change.

Temperature Ratings

Table 8: Temperature Limitations for all Float Switches

Ambient	**Min.**	–30 °C (–22 °F)
	Max.	105 °C (220 °F)

Electrical Ratings

Table 9: Class 9036, 9037, and 9038 Electrical Ratings

Class	Type	Single Phase AC Ratings (hp)			Polyphase AC Ratings (hp)			DC (hp)			Control Circuit Rating
		115 V	230 V	460/575 V	115 V	230 V	460/575 V	32 V	115 V	230 V	
9036	D (2 pole)	2	3	—	3	5	1	0.25	0.5	0.5	A600
	G (2 pole)	2	3	5	3	5	5	0.5	1	1	A600
	G Form H (1 N.O., 1 N.C.)	1	2	2	—	—	—	—	0.5	0.5	A300
9037	E, H (2 pole)	2	3	—	3	5	1	0.25	0.5	0.5	A600
9038	All (2 pole)	2	3	—	3	5	1	0.25	0.5	0.5	A600

The following float switches are UL Listed under file E12158, CCN NKPZ:

- Class 9036 Types DG, DW, GG, GW
- Class 9037 Types EG, EW, HG, HW
- Class 9038 Types AG, AW, CG, CW, DG, DW

The following float switches are UL Listed under file E12443, CCN NOWT:

- Class 9036 Types DR, GR
- Class 9037 Types ER, HR

Table 10: Control Duty Circuit Ratings (Form N5 or N25 only)

Contacts	AC—50 or 60 Hz						DC			AC or DC
	V	Inductive, 35% Power Factor				Resistive, 75% Power Factor	V	Inductive and Resistive		Continuous Carrying Amperes
		Make		Break		Make and Break Amperes		Make and Break Amperes		
		A	VA	A	VA			Single Throw	Double Throw	
SPDT Form N5	120	60	7200	6	720	6	120	0.55	0.22	10
	240	30	7200	3	720	3	250	0.27	0.11	10
	480	15	7200	1.5	720	1.5	600	0.10	—	10
	600	12	7200	1.2	720	1.2	—	—	—	—
DPDT Form N25	120	60	7200	6	720	6	125	0.22	0.22	10
	240	30	7200	3	720	3	250	0.11	0.11	10
	480	15	7200	1.5	720	1.5	600	—	—	10
	600	12	7200	1.2	720	1.2	—	—	—	—

© 2011 Schneider Electric
All Rights Reserved

Class 9036 Type D and G Open Tank Float Switches

Table 11 lists Class 9036 float switches and modifications.

- When ordering a **factory installed modification**, add the Form number to the end of the float switch catalog number. For example, to select a 9036DG2 switch with reverse action, order 9036DG2R.
- **Field installed modifications**, when available, are ordered as kits.

Table 11: Class 9036 Float Switches

Specifications	
Description	2-pole, single-lever operated float switches
Applications	Open industrial tanks and sump applications

General Purpose

Heavy Duty

Catalog Numbers

Contact Action	**Close on Liquid Rise**	**Open on Liquid Rise**	**Close on Liquid Rise**	**Open on Liquid Rise**
NEMA Type 1 [1]	**9036DG2**	**9036DG2R**	**9036GG2**	**9036GG2R**
NEMA Type 4	**9036DW31**	**9036DW31R**	**9036GW1** [2]	**9036GW1R** [2]
NEMA Type 7, 9	**9036DR31**	**9036DR31R**	**9036GR1** [2]	**9036GR1R** [2]

NOTE: A **compensating spring** supports the weight of long rods that cannot be supported by center-hole floats. A compensating spring is standard on Types GR and GW, and can be ordered as a modification (Form C) on other Class 9036 Type D and G float switches.

Modifications	**Factory Installed**	**Field Installed**
	Class 9036 Form	**Kit Catalog Number**
For Type D (General Purpose)		
Reverse action (Type DG)	R	**9049A58**
Compensating spring (Type DG)	C	**9049A19**
Compensating spring (Types DR and DW)	C	**9049A20**
Compensating spring and reverse action (Types DG, DR, and DW)	CR	—
For Type G (Heavy Duty)		
Reverse action [3]	R	—
Compensating spring (Type GG) [4]	C	**9049A13**
Compensating spring and reverse action (Type GG)	CR	**9049A13**
1 N.O.–1 N.C. contact configuration	H	—
Compensating spring and 1 N.O.–1 N.C. contact configuration (Type GG)	CH	—

1 Contact action can be converted in the field by installing the appropriate float rod lever.

2 Compensating spring standard. Use center-hole float accessories.

3 Type GG is field convertible without the use of a kit. Types GR and GW are not field convertible.

4 Compensating spring standard on Types GR and GW.

© 2011 Schneider Electric
All Rights Reserved

Table 12 lists the trip forces and compensating spring requirements for Class 9036 Type D and G float switches. The trip force can be adjusted on the Type G switches by changing the lever length position.

Table 12: Maximum Trip Forces for Class 9036 Float Switches

Class 9036 Type and Form		DG2	DG2R	DW31	DW31R	DR31	DR31R	GG2		GG2R		GR1, GW1		
Lever Length Position		—	—	—	—	—	—	Short	Long	Short	Long	Short	Medium	Long
Force Up to Trip (oz)		9	8	8	8	8	8	33	21	30	22	24	22	20
Force Down to Trip (oz)		8	8	8	8	8	8	39	27	24	16	31	29	27
Maximum Supported Weight (oz)	Without Compensating Spring	6	4	5	5	5	5	25	13	18	11	19	17	16
	With Compensating Spring	60	60	66	66	66	66	[1]	100	[1]	150	80	72	64

1 The compensating spring is not effective in combination with short lever length position.

Figure 3: Lever Length

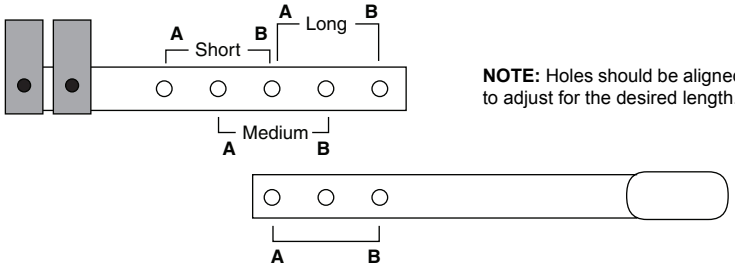

NOTE: Holes should be aligned as shown to adjust for the desired length.

Table 13 lists Class 9049 accessory kits, which are ordered separately from Class 9036 Type D and G float switches. A **float kit** is required; a tubing kit and replacement float do not provide all needed parts.

Table 13: Class 9049 Accessories for Class 9036 Type D and G Float Switches (weight in oz)

Accessory Kits	Tapped-at-Top Floats (#304 SS)			Center-Hole Floats (#304 SS) [1]			Additional Tubing (#303 SS) [2]		
Used on Class 9036 Float Switch Types	All Except GW, GR, and Form C			GW, GR, and Form C			All		
Catalog Number	9049A6	9049A6A	9049A6S	9049A6C	9049A6CA	9049A6CS	9049T1	9049T1A	9049T1S
Tubing (rod)	5 ft brass	5 ft Al	5 ft SS	5 ft brass	5 ft Al	5 ft SS	2.5 ft brass	2.5 ft Al	2.5 ft SS
Net buoyancy in water, 7 in. float [3]	60	60	60	70	70	70	—	—	—
Combined weight of stops	3	3	3	6	6	6	—	—	—
Number of stops	2	2	2	4	4	4	—	—	—
Weight of 5 ft rod, included	18.5	6	16.9	18.5	6	16.9	—	—	—
Weight per ft of extra rod	3.7	1.2	3.4	3.7	1.2	3.4	3.7	1.2	3.4

1 Require the use of the 9049A6, 9049A6A, or 9049A6S kit. The additional tubing only attaches to other lengths of tubing.

2 Additional tubing kits add on to the float accessory kits and include a connector.
Maximum recommended tubing length: **Tapped-at-top** float: 12.5 ft (3810 mm); **Center-hole float**: 30 ft (9144 mm).

3 Net buoyancy calculated with float 80% submerged, allowing for a 20% operating margin. Buoyancy data calculated for use in water. Consult the Sensor Competency Center for buoyancy data in media having specific gravity different than water (1.0).

When ordering, first specify the desired accessory kit, then as a second item give the number of additional tubing kits required. For example, to get a 9049A6C kit with 15 ft of tubing, specify:

A. 9049A6C, quantity = 1 (includes 5 ft of tubing)

B. 9049T1, quantity = 4 (2.5 ft of tubing each, for a total of 10 additional ft)

Example

Calculation example			
Measuring 15 ft of tank depth	**Float buoyancy**		70.0 oz
System has 15 ft of brass rod, 4 stops, and a center hole float.	**Total weight**		(61.5 oz)
	Weight of stops:	(6.0 oz)	
Buoyancy is positive, so no compensating spring is required	Weight of 5 ft of brass rod (included):	(18.5 oz)	
	Weight of 10 ft of brass rod (separate):	(37.0 oz)	
	Buoyancy		8.5 oz

© 2011 Schneider Electric
All Rights Reserved

Figure 4: Type DG Dimensions

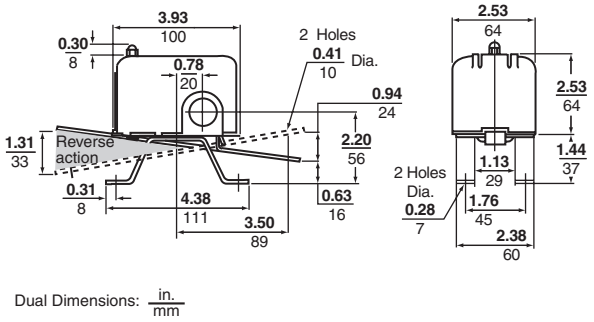

Figure 5: Types DR/DW Dimensions

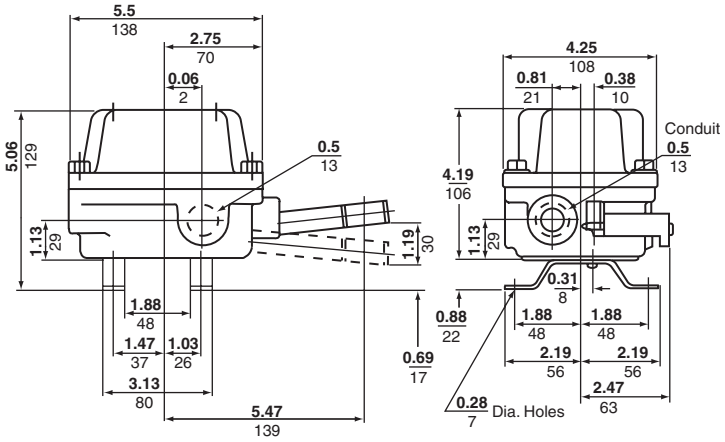

Figure 6: Type GG Dimensions

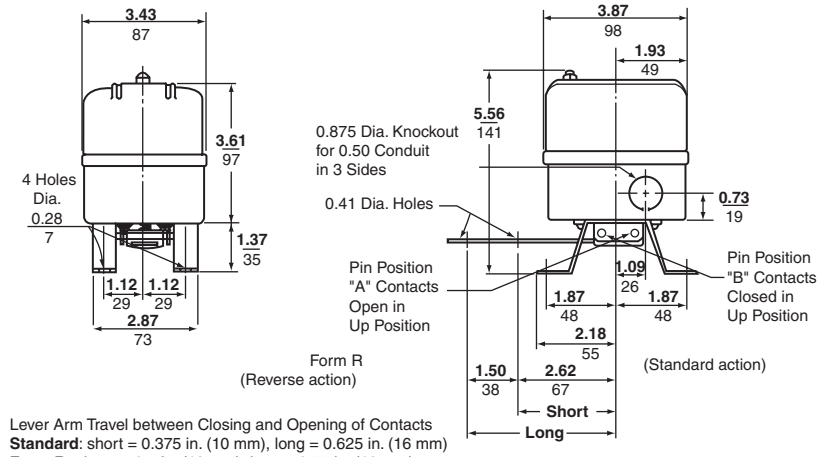

Lever Arm Travel between Closing and Opening of Contacts
Standard: short = 0.375 in. (10 mm), long = 0.625 in. (16 mm)
Form R: short = 0.5 in. (13 mm), long = 0.75 in. (19 mm)

Figure 7: Types GR/GW Dimensions

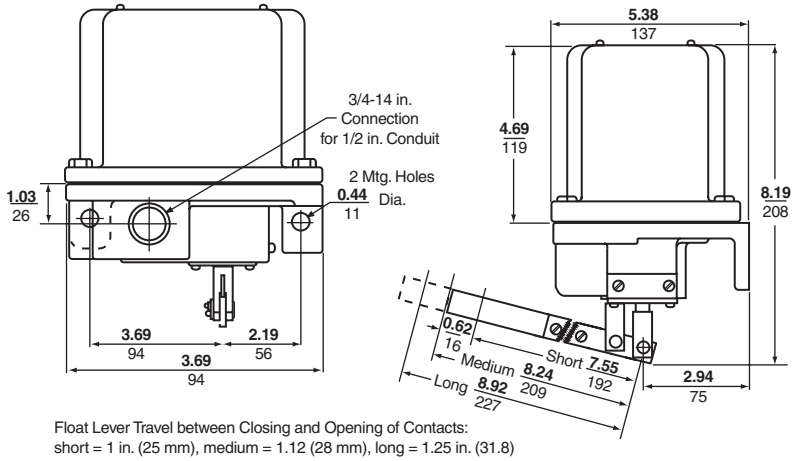

Float Lever Travel between Closing and Opening of Contacts:
short = 1 in. (25 mm), medium = 1.12 (28 mm), long = 1.25 in. (31.8)

© 2011 Schneider Electric
All Rights Reserved

Class 9036 Type FG and Class 9049 Accessories

Class 9036 Type FG30 pedestal-style sump pump switches provide:

- Liquid level control with pumps operated by an electric motor, either directly or through a magnetic starter
- Activation of alarms in liquid level control systems
- Forward or reverse action (field selectable)

The upward or downward movement of the lever arm controls the On and Off positions corresponding to the water level changes required to turn the pump or alarm on and off.

Table 14: Class 9036 Type FG30 Pedestal-Style Sump Pump Switch and Accessory Kits

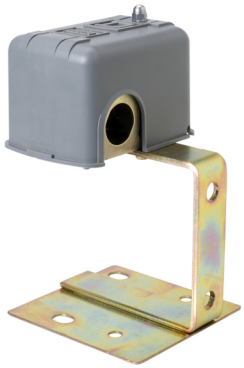

Catalog Number		Pedestal-style Sump Pump Switch		Accessory Kits	
		9036FG30		9049A60	9049A61
Description		2-pole, pedestal-style sump pump switch		Plastic center hole float	33.75 in. aluminum rod, 2 float stop assemblies, and attaching hardware
Quantity Required		1		1	1
NEMA Type		NEMA Type 1		—	—
Contact Action		Contacts close on liquid rise		—	—
Rod Length		—		—	33.75 in. (cannot be lengthened)
Voltage		120/240 Vac		—	—
Horsepower Rating	Single phase	2 hp @ 120 Vac	3 hp @ 240 Vac	—	—
	Polyphase	3 hp @ 120 Vac	5 hp @ 240 Vac	—	—

Example:

9036FG
9049A60
9049A61

© 2011 Schneider Electric
All Rights Reserved

Class 9037 Type E Closed Tank Float Switches

Class 9037 closed tank float switches are used primarily on condensate pumps but may also be installed on closed industrial and diesel fuel day tanks. There are two types of Class 9037 float switches:

- Type E (flange mounted)
- Type H (with screw-in bushing)

Class 9037 Type E Flange-Mounted Float Switches

Table 15 contains ordering information for Class 9037 Type E float switches. Order the rod and float accessory kits separately. Contact the Sensor Competency Center when using Class 9037 float switches in liquids with a different specific gravity than water (1.0).

Table 15: Class 9037 Type E Float Switches

Float Position 1

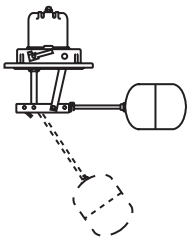

Float Position 2

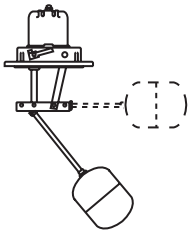

Float Position 3

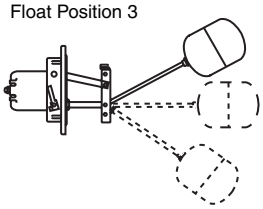

Specifications		
Application		Closed industrial tanks Flange mounted
Float movement		Transmitted through a quad ring seal, which may need occasional replacement
Tank Pressure		Up to 50 psi
Temperature	**Ambient**	Up to 220 °F
	Media	Buna-N seal: up to 215 °F. Viton® seal: up to 250 °F.
Contact Operation		Determined by the float and rod mounting position
Float Travel		Determined by the post length

Catalog Numbers				
Post Length (L), in. (mm)	**2.63 (67)**		**4.69 (119)**	
Water Level Change	**Minimum**	**Maximum**	**Minimum**	**Maximum**
NEMA 1	9037EG8	9037EG9	9037EG10	9037EG13
NEMA 4	9037EW8	9037EW9	9037EW10	9037EW13
NEMA 7, 9	9037ER8	9037ER9	9037ER10	9037ER13
Float Position [1]	1	1, 2, 3	1	1, 2, 3
Float Kits				
Material	**Catalog Number**			
#304 Stainless Steel	**9049EF1**			
#316 Stainless Steel	**9049EF2**			

1 For more information on float position, refer to pages 55–56.

For rod kit catalog numbers, refer to pages 55 and 56.

To receive all components packaged in a single carton, specify:

- Float switch Class, Type, and Form
- “R” and the rod number
- “F” and the float number

For example, to receive one each of 9037EG8, 9049ER1, and 9049EF1, specify **9037EG8R1F1**.

© 2011 Schneider Electric
All Rights Reserved

Figure 8: Type EG Dimensions

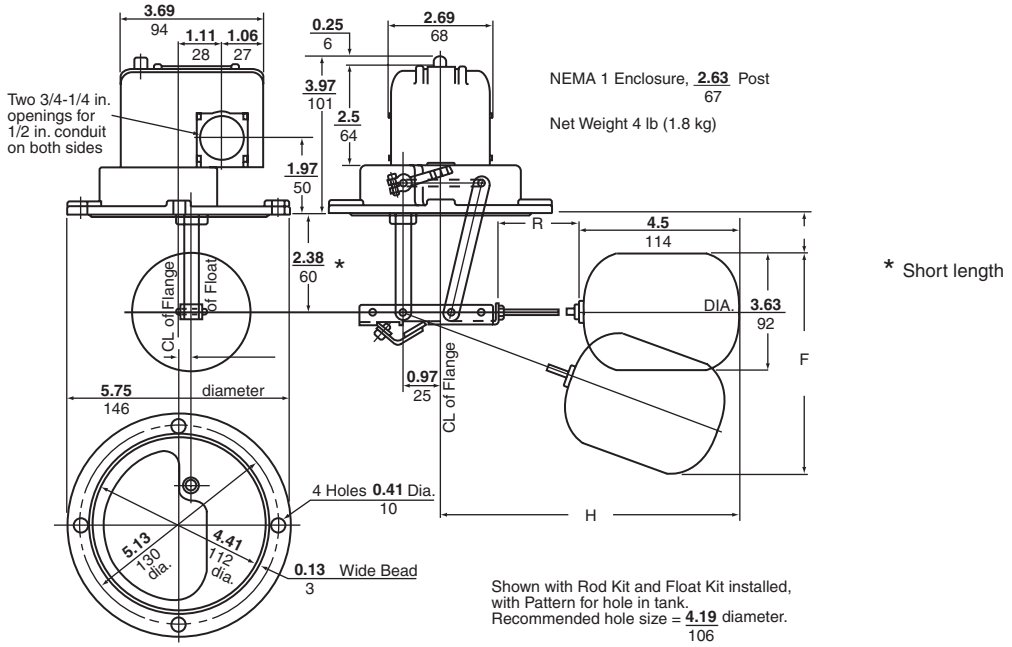

Figure 9: Type ER/EW Dimensions

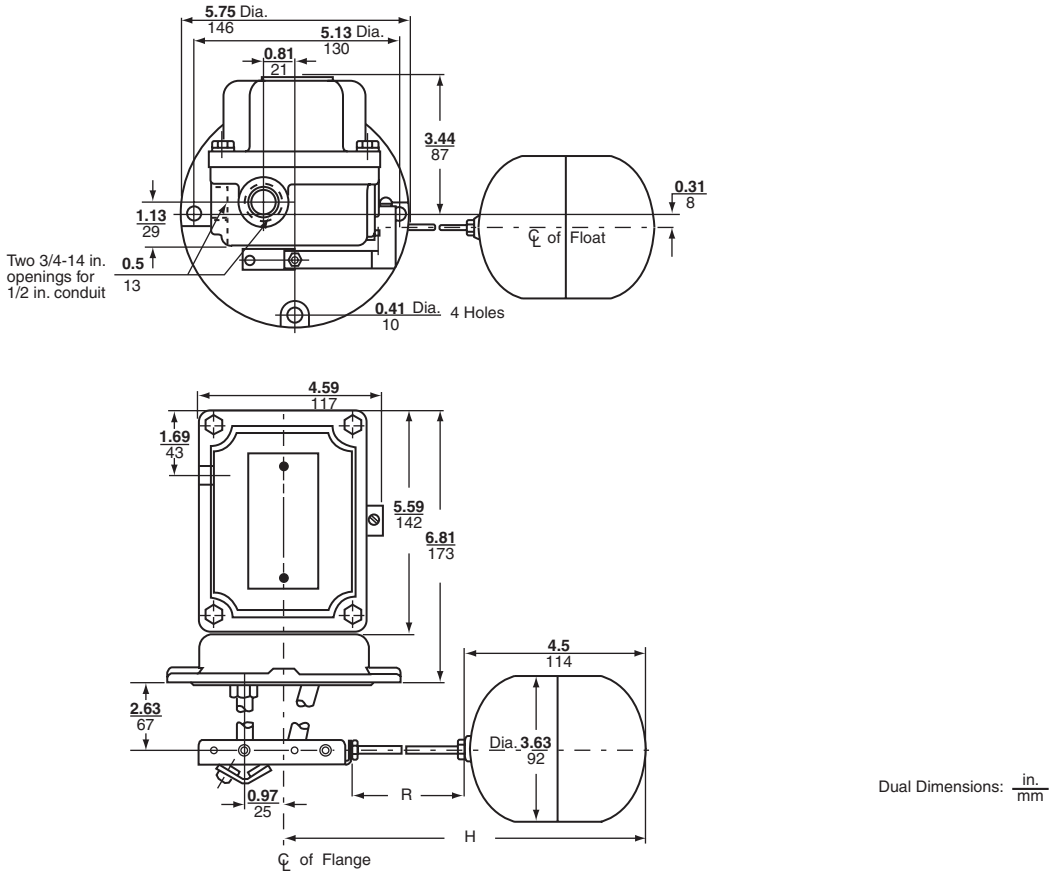

© 2011 Schneider Electric
All Rights Reserved

Class 9037 Type E Closed Tank Rod Kits

Position 1 Operation

In Position 1, the contacts **close** when the liquid rises. Select rod kits from Table 16.

Table 16: Class 9049 Rod Kits—Position 1 Operation (Contacts *Close* on Liquid Rise)

Catalog Numbers								
Dimension in. (mm)		**For Use on Float Switch Types**	**Rod Kits**					
			9049ER1	**9049ER2**	**9049ER3**	**9049ER5**	**9049ER7**	**9049ER12**
R		**EG8, EW8, ER8, EG10, EW10, ER10**	1.75 (44)	2.5 (64)	3.25 (83)	5.25 (133)	7.25 (184)	12.25 (311)
		EG9, EW9, ER9, EG13, EW13, ER13	1.75 (44)	2.5 (64)	3.25 (83)	5.25 (133)	7.25 (184)	12.25 (311)
H		**EG8, EW8, ER8, EG10, EW10, ER10**	8.25 (210)	9 (229)	9.5 (241)	11.75 (298)	13.75 (349)	18.75 (476)
		EG9, EW9, ER9, EG13, EW13, ER13	7.5 (191)	8.25 (210)	9 (229)	11 (279)	12 (305)	18 (457)
A	**Min.**	**EG8, EW8, ER8**	1 (25)	1 (25)	1 (25)	1 (25)	1 (25)	1 (25)
		EG9, EW9, ER9	1 (25)	1 (25)	1 (25)	1 (25)	1 (25)	1 (25)
		EG10, EW10, ER10	3.06 (78)	3.06 (78)	3.06 (78)	3.06 (78)	3.06 (78)	3.06 (78)
		EG13, EW13, ER13	3.06 (78)	3.06 (78)	3.06 (78)	3.06 (78)	3.06 (78)	3.06 (78)
	Max.	**EG8, EW8, ER8**	2 (51)	2 (51)	2 (51)	2.5 (64)	3 (76)	4.25 (108)
		EG9, EW9, ER9	4 (102)	4.5 (114)	5 (127)	6 (152)	7.5 (191)	9.5 (241)
		EG10, EW10, ER10	4.06 (103)	4.06 (103)	4.06 (103)	4.56 (116)	5.06 (129)	6.31 (160)
		EG13, EW13, ER13	6.06 (154)	6.56 (167)	7.06 (179)	8.06 (205)	9.56 (243)	11.56 (294)
F	**Min.**	**EG8, EW8, ER8, EG10, EW10, ER10**	4.75 (121)	4.75 (121)	4.75 (121)	4.75 (121)	5 (127)	5.75 (146)
		EG9, EW9, ER9, EG13, EW13, ER13	6 (152)	6.25 (159)	6.25 (159)	6.5 (165)	6.5 (165)	9 (229)
	Max.	**EG8, EW8, ER8, EG10, EW10, ER10**	6 (152)	6.25 (159)	6.5 (165)	6.75 (171)	7.25 (184)	9 (229)
		EG9, EW9, ER9, EG13, EW13, ER13	9 (229)	9.75 (248)	10.25 (260)	11.5 (292)	13 (330)	17.5 (445)
Water Level Change	**Min.**	**EG8, EW8, ER8, EG10, EW10, ER10**	1.75 (44)	1.75 (44)	1.75 (44)	1.75 (44)	2 (51)	2.75 (70)
		EG9, EW9, ER9, EG13, EW13, ER13	3 (76)	3.25 (83)	3.25 (83)	3.5 (89)	3.5 (89)	6 (152)
	Max.	**EG8, EW8, ER8, EG10, EW10, ER10**	3 (76)	3.25 (83)	3.5 (89)	3.75 (95)	4.25 (108)	6 (152)
		EG9, EW9, ER9, EG13, EW13, ER13	6 (152)	6.75 (171)	7.25 (184)	8.5 (216)	10 (254)	14.5 (368)

Figure 10: Float Position 1

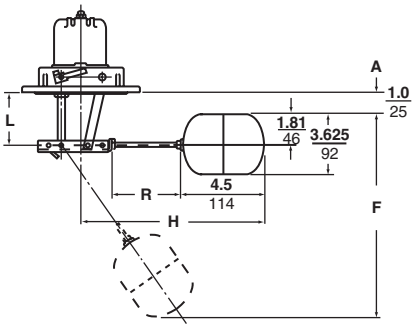

Figure 11: Float Position 2

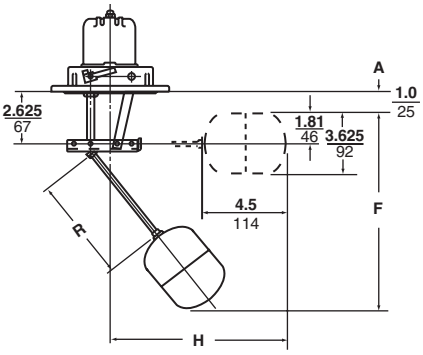

Figure 12: Float Position 3

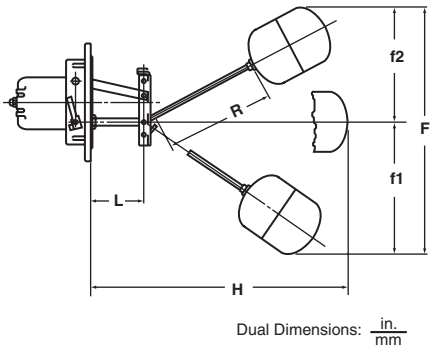

© 2011 Schneider Electric
All Rights Reserved

Position 2 Operation

In Position 2, the contacts **open** when the liquid rises. Select rod kits from Table 17.

Table 17: Class 9049 Rod Kits—Position 2 Operation (Contacts *Open* on Liquid Rise)

Catalog Numbers								
Dimension in. (mm)		For Use on Float Switch Types	Rod Kits					
			9049ER1	9049ER2	9049ER3	9049ER5	9049ER7	9049ER12
R		EG9, EW9, ER9, EG13, EW13, ER13	1.75 (44)	2.50 (64)	3.25 (83)	5.25 (133)	7.25 (184)	12.25 (311)
H		EG9, EW9, ER9, EG13, EW13, ER13	7.50 (191)	8.25 (210)	9.00 (229)	11.00 (279)	13.00 (330)	18.00 (457)
A	Min.	EG9, EW9, ER9	1.00 (25)	1.00 (25)	1.00 (25)	1.00 (25)	1.00 (25)	1.00 (25)
		EG13, EW13, ER13	3.06 (78)	3.06 (78)	3.06 (78)	3.06 (78)	3.06 (78)	3.06 (78)
	Max.	EG9, EW9, ER9	3.00 (76)	3.50 (89)	4.00 (102)	5.00 (127)	6.00 (152)	8.50 (216)
		EG13, EW13, ER13	5.06 (129)	5.56 (141)	6.06 (154)	7.06 (179)	8.06 (205)	10.56 (268)
F	Min.	EG9, EW9, ER9, EG13, EW13, ER13	5.25 (133)	5.75 (146)	6.00 (152)	6.75 (171)	7.75 (197)	10.25 (260)
	Max.	EG9, EW9, ER9, EG13, EW13, ER13	7.25 (184)	8.25 (210)	9.00 (229)	10.75 (273)	12.75 (324)	17.75 (451)
Water Level Change	Min.	EG9, EW9, ER9, EG13, EW13, ER13	2.75 (70)	2.75 (70)	3.00 (76)	3.75 (95)	4.75 (121)	7.25 (184)
	Max.	EG9, EW9, ER9, EG13, EW13, ER13	4.25 (108)	5.25 (133)	6.00 (152)	7.75 (197)	9.00 (229)	12.25 (311)

Position 3 Operation

In Position 3, the contacts can be set to open (standard) or close (sump) on liquid rise by turning the control switch 180° around its horizontal center line. Select rod kits from Table 18.

Table 18: Class 9049 Rod Kits—Position 3 Operation (Contact Operation Adjustable)

Catalog Numbers								
Dimension in. (mm)		For Use on Float Switch Types	Rod Kits					
			9049ER1	9049ER2	9049ER3	9049ER5	9049ER7	9049ER12
R		EG9, EW9, ER9, EG13, EW13, ER13	1.75 (44)	2.50 (64)	3.25 (83)	5.25 (133)	7.25 (184)	12.25 (311)
H		EG9, EW9, ER9	9.00 (229)	9.75 (248)	10.50 (267)	12.50 (318)	14.50 (368)	19.50 (495)
		EG13, EW13, ER13	11.00 (279)	11.75 (298)	12.50 (318)	14.50 (368)	16.50 (419)	21.50 (546)
f1 or f2	Min.	EG9, EW9, ER9, EG13, EW13, ER13	2.75 (70)	2.75 (70)	3.00 (76)	3.50 (89)	3.75 (95)	4.50 (114)
	Max.	EG9, EW9, ER9, EG13, EW13, ER13	4.50 (114)	4.50 (114)	5.00 (127)	6.00 (152)	7.00 (178)	9.50 (241)
F	Min.	EG9, EW9, ER9, EG13, EW13, ER13	5.50 (140)	5.50 (140)	6.00 (152)	7.00 (178)	7.50 (191)	8.75 (222)
	Max.	EG9, EW9, ER9, EG13, EW13, ER13	9.00 (229)	9.00 (229)	10.00 (254)	12.00 (305)	14.00 (356)	19.00 (483)
Water Level Change	Min.	EG9, EW9, ER9, EG13, EW13, ER13	2.25 (57)	2.25 (57)	2.75 (70)	3.75 (95)	4.25 (108)	5.5 (140)
	Max.	EG9, EW9, ER9, EG13, EW13, ER13	5.75 (146)	5.75 (146)	6.75 (171)	8.75 (222)	10.75 (273)	15.75 (400)

© 2011 Schneider Electric
All Rights Reserved

Class 9037 Type H with Screw-in Bushing

9037HG35
Float on the Right

Table 19 contains ordering information for Class 9037 Type H float switches and factory installed modifications. Contact the Sensor Competency Center when using float switches in liquids with a different specific gravity than water (1.0).

When ordering factory installed modifications, add the Form number to the end of the float switch catalog number. For example, to select a 9037HG36 switch with reverse action, order 9037HG36R.

Table 19: Class 9037 Type H Float Switches

Specifications		
Application		Condensate pumps A 2.5 in. cast-iron bushing attaches the float switch to the tank
Float movement		Transmitted through a nitrile rubber seal such as a Buna-N quad ring. Occasional replacement may be necessary.
Tank Pressure		Up to 50 psi
Temperature	**Ambient**	Up to 220 °F
	Media	Buna-N seal: up to 215 °F. Viton® seal: media up to 250 °F.
Contact Operation		Close on liquid rise (standard) Open on liquid rise (Form R)
Float Travel		Determined by the float rod angle. An external pointer indicates the float position.
Materials (Standard)		#304 SS float, #316 SS rod, 2.5 in. cast iron bushing, brass sealing connector, Buna-N quad ring packing.

Catalog Numbers										
Float Rod Angle	**45°**		**90° offset**							
Water Level Change Minimum–Maximum, in. (mm)	2.00–5.00 (52–127)		2.50–5.00 (64–127)		3.75–7.00 (95–178)		4.25–8.25 (108–210)		6.00–11.50 (152–292)	
Float Position [1]	Left	Right	Left	Right	Left	Right	Left	Right	Left	Right
NEMA Type 1	**9037HG34**	**9037HG33**	**9037HG36**	**9037HG35**	**9037HG38**	**9037HG37**	**9037HG30**	**9037HG39**	**9037HG32**	**9037HG31**
NEMA Type 4	**9037HW34**	**9037HW33**	**9037HW36**	**9037HW35**	**9037HW38**	**9037HW37**	**9037HW30**	**9037HW39**	**9037HW32**	**9037HW31**
NEMA Type 7, 9	**9037HR34**	**9037HR33**	**9037HR36**	**9037HR35**	**9037HR38**	**9037HR37**	**9037HR30**	**9037HR39**	**9037HR32**	**9037HR31**
CL to CL in. (mm)	—		3 (76)		4.25 (108)		5 (127)		7 (178)	

Modifications	**Form**
Omit 2.5 in. bushing	F3
Omit float	L
Reverse action: contacts open on liquid rise	R [2]
Viton packing, 5 oz float (diesel fuel, Types HG, HW, HR30, 31, 32, 37, 38, 39 only)	Z19
Viton packing, for media temperature up to 250 °F	Z20
Viton packing, #316 SS float	Z21

1 Viewed from the front of the switch, facing the indicator scale.

2 Type HG is field modifiable. Type HR and HW **cannot** be modified in the field.

NOTE: For replacement floats, see “Class 9049 Accessories” on page 67.

© 2011 Schneider Electric
All Rights Reserved

Table 20 lists the float travel distances for the screw-in float switches. Refer to Figure 13.

Figure 13: Travel Dimensions

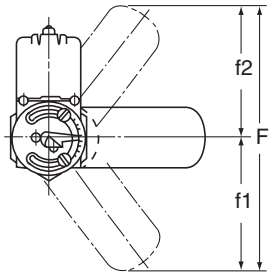

Table 20: Type H Float Travel Distances, in. (mm)

Float Rod Angle	R	H [1]	f1		f2		F	
			Minimum	Maximum	Minimum	Maximum	Minimum	Maximum
45°	—	6.22 (158)	2.25 (57)	4.50 (114)	2.00 (52)	4.50 (110)	4.25 (108)	9.00 (229)
90° offset	3.00 (76)	4.25 (108)	2.75 (70)	4.25 (108)	2.25 (57)	4.25 (108)	5.00 (127)	7.50 (191)
90° offset	4.25 (108)	5.50 (140)	3.50 (89)	5.50 (140)	2.75 (70)	4.00 (102)	6.25 (159)	9.50 (241)
90° offset	5.00 (127)	6.25 (159)	3.75 (95)	6.25 (159)	3.00 (76)	4.50 (110)	6.75 (171)	10.75 (273)
90° offset	7.00 (178)	8.25 (210)	4.75 (121)	8.25 (210)	3.75 (95)	5.75 (146)	8.50 (216)	14.00 (356)

1 Clearance from centerline of hub to side of tank.

Figure 14: Type HG—45° Angle Dimensions

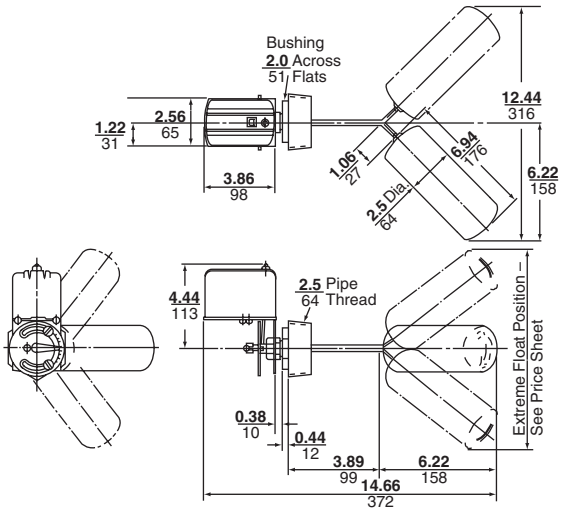

Figure 15: Type HG—90° Offset Dimensions

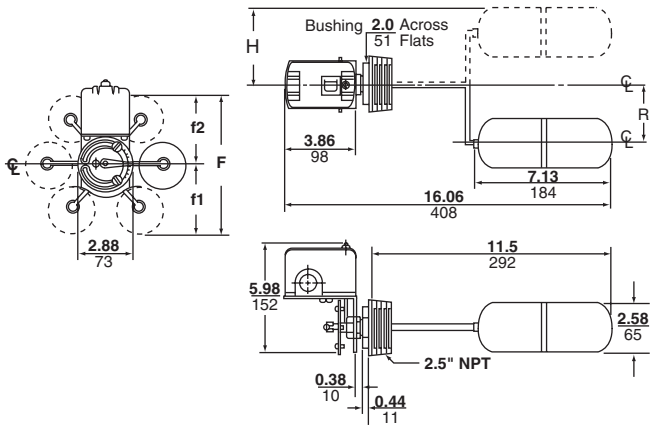

Figure 16: Type HR/HW—45° Angle Dimensions

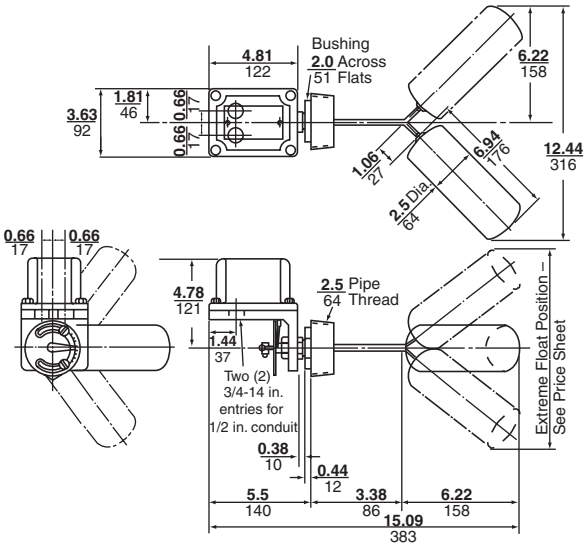

Figure 17: Type HR/HW—90° Offset Dimensions

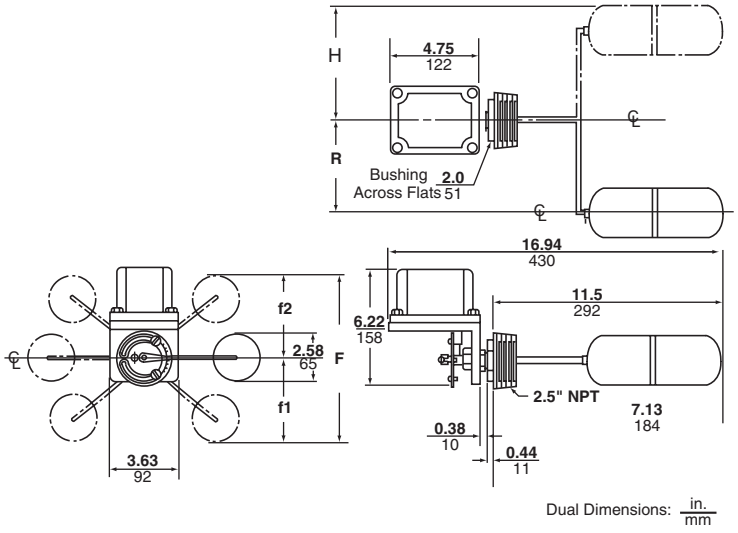

© 2011 Schneider Electric
All Rights Reserved

Class 9038 Type A Mechanical Alternators

Class 9038 mechanical alternators provide a simple, positive means of mechanically alternating two pumps or motors. These alternators are used on devices that are installed in a duplex system with a common tank. There are three types of Class 9038 mechanical alternators:

- Type A (open tank and sump)
- Type C (with bushing)
- Type D (flange mounted, vertical)

When liquid level rises to the first level, one pump turns on. Both pumps automatically turn on when a peak condition occurs and the liquid level continues to rise. If Form N5 or N25 is present, and the water level continues to rise, a high water alarm is activated.

Mechanical alternators can be ordered with a manual transfer selector switch (Form N3), which allows the operator to select which pump cuts in first. The second pump only operates under peak demand conditions or if the first pump fails. When the switch is disengaged, the alternator reverts to normal operation. Another option (Form N4) allows the alternator to be used as a two-level non-alternating unit.

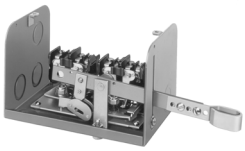
9038AG1

Class 9038 Type A Open and Sump Tank Mechanical Alternators

Table 21 contains ordering information for Class 9038 Type A mechanical alternators, including factory installed modifications. Order float accessories separately. Contact the Sensor Competency Center when using Class 9038 alternators in liquids with a different specific gravity than water (1.0).

When ordering a factory modification, add the Form number to the end of the mechanical alternator catalog number. For example, to select a 9038AG1 alternator with reverse action, order 9038AG1R.

Table 21: Class 9038 Type A Mechanical Alternators

Specifications	
Application	Open and sump tanks using duplex pumps
Float Movement	Float operated
Ambient Temperature	–22 to +200 °F
Contact Operation	Close on liquid rise (standard) Open on liquid rise (Form R)

Catalog Numbers	
NEMA 1	**9038AG1**
NEMA 4 (compensating spring standard)	**9038AW1**
NEMA 7, 9 (compensating spring standard)	**9038AR1**

Modifications **NOTE:** Factory installed only.	**Form**
Compensating spring (Type AG)	C (field installable)
Two-level, non-alternating unit	N4
High water alarm circuit (single pole)	N5
High water alarm circuit (two pole)	N25
Reverse action: contacts open on liquid rise	R

Accessories	**Catalog Number**
Compensating spring (Type AG)	**9049A15**

© 2011 Schneider Electric
All Rights Reserved

Table 22 lists the operating forces for Class 9038 Type A alternators. Use this table when selecting additional tubing or when selecting floats and rods for accessories made by other manufacturers.

Table 22: Class 9038 Type A Operating Forces

Catalog Number		9038AG1		9038AG1R		9038AR1/9038AW1	9038AR1R/9038AW1R
Lever Length Position		Minimum	Maximum	Minimum	Maximum	Standard	Standard
Force Up to Trip (oz), without Form C [1]		18	16	14	11	—	—
Force Down to Trip (oz), without Form C [1]		20	17	16	12	—	—
Maximum Rod Length Supported by the Compensating Spring ft (m) [2]	Brass	10 (3.05)	8 (2.44)	7 (2.13)	6 (1.83)	16 (4.88)	19 (5.79)
	Stainless Steel	12 (3.66)	10 (3.05)	8 (2.44)	7 (2.13)	20 (6.1)	23 (7.01)
	Aluminum	25 (7.62)	21 (6.4)	17 (5.18)	15 (4.57)	41 (12.5)	47 (14.33)
Maximum Weight of Tubing and Stops Supported by the Compensating Spring (oz)		47	41	33	30	74	85

1 Add 2 oz for high water alarm (Form N5 or N25).

2 Rod length determined using Class 9049 rod material (0.38 in. / 10 mm O.D. tubing).
Other types of rod must be weighed and compared to the “Maximum Weight of Tubing and Stops” row above.

Accessory Kits

Table 23 lists the Class 9049 accessory kits for Class 9038 Type A alternators. The accessories are ordered separately from the alternators. Order tapped-at-top floats for Type AG1 (except form C) and center-hole floats for Types AG1C, AW1, and AR1.

Table 23: Class 9049 Accessories for Class 9038 Type A Float Switches (weight in oz)

Accessory Kits	Tapped-at-Top Floats (#304 SS)			Center-Hole Floats (#304 SS)			Additional Tubing [1]		
Catalog Numbers	9049A6	9049A6A	9049A6S	9049A6C	9049A6CA	9049A6CS	9049T1	9049T1A	9049T1S
Tubing	5 ft brass	5 ft Al	5 ft SS	5 ft brass	5 ft Al	5 ft SS	2.5 ft brass	2.5 ft Al	2.5 ft SS
Net buoyancy in water, 7 in. float [2]	60	60	60	70	70	70	—	—	—
Total weight of stops	3	3	3	6	6	6	—	—	—
Number of stops	2	2	2	4	4	4	—	—	—
Weight of 5 ft rod, included	18.5	6	16.9	18.5	6	16.9	—	—	—
Weight per ft of extra rod	—	—	—	—	—	—	3.7	1.2	3.4

1 Additional tubing kits add on to the float accessory kits and include a connector. Maximum recommended tubing length for tapped-at-top float: 12.5 ft (3810 mm).

2 Net buoyancy calculated with float 80% submerged, allowing for a 20% operating margin. Buoyancy data calculated for use in water. Contact the Sensor Competency Center for buoyancy data in media having specific gravity different than water (1.0).

When ordering float accessories, first specify the desired accessory kit, then as a second item, give the catalog number and the quantity of the additional tubing kits required. For example, for a 9049A6C kit with 15 ft of tubing, specify:

A. 9049A6C, quantity = 1 (includes 5 ft of tubing)

B. 9049T1, quantity = 4 (2.5 ft of tubing each, for a total of 10 additional ft)

Figure 18: Type AG1 Dimensions

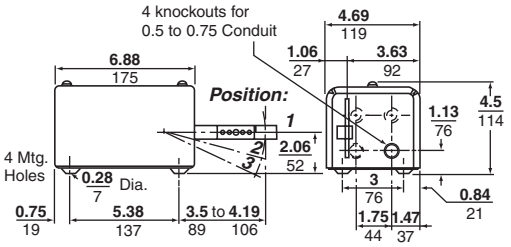

Figure 19: Type AR1/AW1 Dimensions

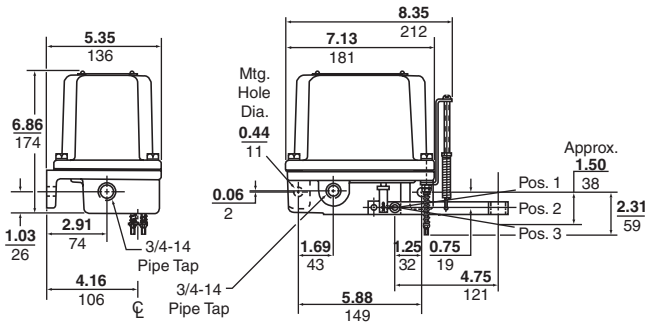

© 2011 Schneider Electric
All Rights Reserved

Class 9038 Type C Mechanical Alternators with Bushing

Table 24 contains ordering information for Class 9038 Type C mechanical alternators. Contact the Sensor Competency Center when using Class 9038 alternators in liquids with a different specific gravity than water (1.0).

When ordering a factory modification, add the Form number to the end of the alternator catalog number. For example, to select a 9038CG36 alternator with reverse action, select 9038CG36R.

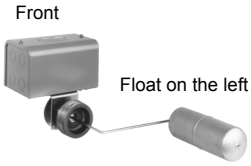

9038CG36

Table 24: Class 9038 Type C Mechanical Alternators

Specifications	
Application	Closed tanks using duplex, condensate pumps A 2.5 in. cast iron bushing attaches the float switch to the tank
Float movement	Transmitted through a nitrile rubber seal such as a Buna-N quad ring. Occasional seal replacement may be necessary.
Tank Pressure	Up to 50 psi
Ambient Temperature	–22 to +200 °F
Media Temperature (Minimum)	Solidification point of the medium in the tank, down to –22 °F
Contact Operation	Close on liquid rise (standard) Open on liquid rise (Form R)
Float Travel	Float travel is determined by the rod length. An external pointer indicates the float position. For more information on float travel and position, see “Float Travel” on page 64.
Materials (Standard)	#304 SS float, #316 SS rod, 2.5 in. cast iron bushing, brass sealing connector, Buna-N quad ring packing

Catalog Numbers

Float Position [1]	**Left**			**Right**		
Water Level Change, Minimum–Maximum **in.** **(mm)**	6.5–13 (165–330)	4–7.75 (102–197)	4.75–9.25 (121–235)	6.5–13 (165–330)	4–7.75 (102–197)	4.75–9.25 (121–235)
NEMA 1	**9038CG32**	**9038CG34**	**9038CG36**	**9038CG31**	**9038CG33**	**9038CG35**
NEMA 4	**9038CW32**	**9038CW34**	**9038CW36**	**9038CW31**	**9038CW33**	**9038CW35**
NEMA 7, 9	**9038CR32**	**9038CR34**	**9038CW36**	**9038CR31**	**9038CR33**	**9038CW35**

Modifications	**Form**
Omit 2.5 in. cast iron bushing	F3
Omit float	L
Two-level, non-alternating unit	N4 [2]
High water alarm circuit, single pole (Type CG only)	N5 [2]
High water alarm circuit, two pole (Type CG only)	N25 [2]
Reverse action: contacts open on liquid rise	R [2]
Fluorocarbon polymer such as Viton® packing, 5 oz float (diesel fuel, Type CG only)	Z19
Fluorocarbon polymer such as Viton packing, for media temperature up to 250 °F	Z20
Fluorocarbon polymer such as Viton packing, #316 SS float for liquid temperatures up to 250 °F	Z21

1 Viewed from front of alternator, facing indicator scale.

2 Factory installed only.

NOTE: For replacement floats, refer to page 67.

© 2011 Schneider Electric
All Rights Reserved

Table 25 lists the float travel distances for the screw-in float switches. Refer to Figure 20.

Table 25: Type C Float Travel Adjustments, in. (mm)

R	A		B		C		D		F	
	Min.	Max.	Min.	Max.	Min.	Max.	Min.	Max.	Min.	Max.
4.25 (108) [1]	2 (51)	3.5 (89)	3.5 (89)	4.75 (121)	2.5 (64)	3.75 (95)	3.5 (89)	4.75 (121)	7 (178)	9.5 (241)
5 (127) [2]	2.25 (57)	3.75 (95)	4 (102)	5.25 (133)	2.75 (70)	3 (76)	4 (102)	5.25 (133)	8 (203)	10.5 (267)
7 (178) [3]	2.5 (64)	5 (127)	5 (127)	7 (178)	2 (51)	4 (102)	5 (152)	7 (178)	10 (254)	14 (495)

1 CG33, CG34, CW33, CW34, CR33, CR34

2 CG35, CG36, CW35, CW36, CR35, CR36

3 CG31, CG32, CW31, CW32, CR31, CR32

Figure 20: Travel Dimensions

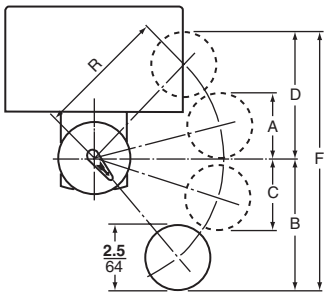

Figure 21: Type CG Dimensions

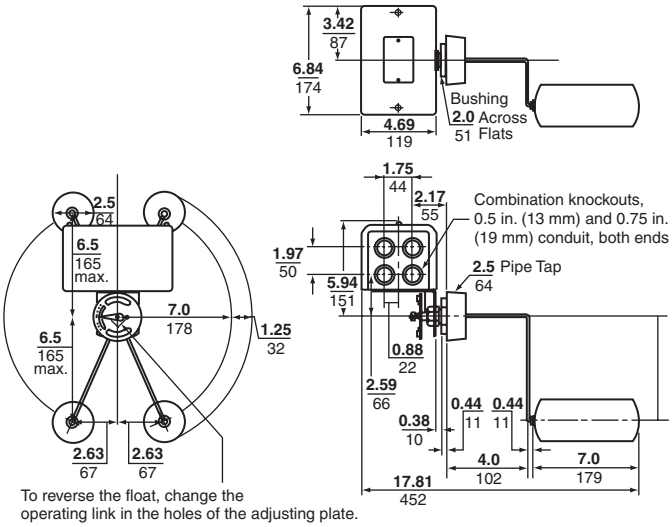

Figure 22: Type CR/CW Dimensions

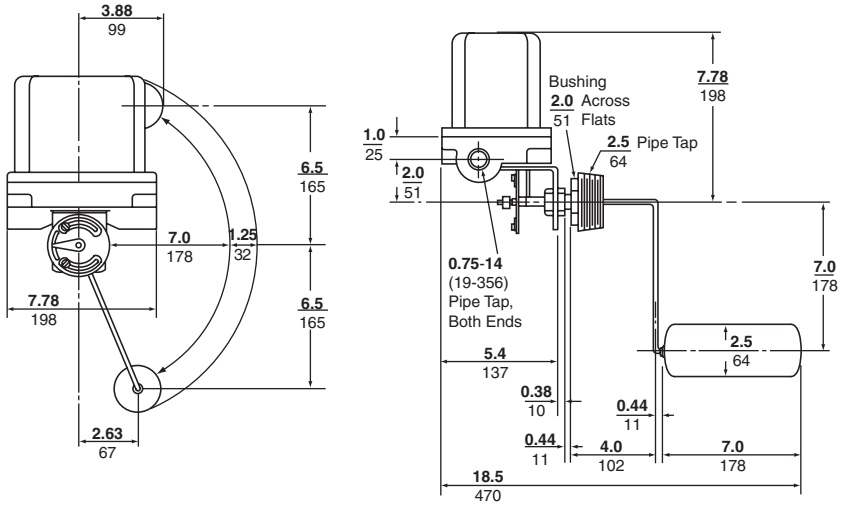

© 2011 Schneider Electric
All Rights Reserved

Class 9038 Type D Flange-Mounted Mechanical Alternators

Flange Mounted

9038DG
9049ER5
9049EF1

Table 26 contains ordering information for Class 9038 Type D alternators, factory modifications, and float kits. Order rod and float accessory kits separately. Contact the Sensor Competency Center when using Class 9038 alternators in liquids with a different specific gravity than water (1.0).

When ordering a factory modification, add the Form number to the end of the alternator Type number. For example, to select a 9038DG7 alternator with manual transfer, order 9038DG7N3.

Table 26: Class 9038 Type D Mechanical Alternators

Specifications	
Application	Industrial closed tanks using duplex, condensate pumps Top mounted only
Float movement	Transmitted through a quad ring seal (occasional replacement may be necessary)
Tank Pressure	Up to 50 psi
Media Temperature	Viton® seal: up to 250 °F
Contact Operation	Close on liquid rise or open on liquid rise (field reversible)
Float Travel	Determined by the length of the hinge post and rod and by the float position For more information on float travel and position, see “Float Travel” on page 64.

Catalog Numbers				
Hinge Post Length (V) in. (mm)	**2.63 (67)**		**4.69 (119)**	
Water Level Change	**Minimum**	**Maximum**	**Minimum**	**Maximum**
NEMA 1	**9038DG7**	**9038DG8**	**9038DG9**	**9038DG10**
NEMA 4	**9038DW7**	**9038DW8**	**9038DW9**	**9038DW10**
NEMA 7, 9	**9038DR7**	**9038DR8**	**9038DR9**	**9038DR10**

Modifications **NOTE:** Factory installed only.	**Form**
Two-level, non-alternating unit	N4
High water alarm circuit (Type DG only)	N5

Float Kits			
Material	**Diameter in. (mm)**	**Length in. (mm)**	**Catalog Number**
#304 stainless steel	3.62 (92)	4.5 (114)	**9049EF1**
#316 stainless steel	3.62 (92)	4.5 (114)	**9049EF2**
NOTE: The following float kits are available but are not recommended for use with 9038D mechanical alternators. The float travel dimensions shown in this catalog for 9038D devices do not apply when using these floats. A correction factor appears in the footnote of Tables 27–30 on pages 64 and 66.			
#304 stainless steel	2.5 (64)	7 (178)	**9049HF3**
#316 stainless steel	2.5 (64)	7 (178)	**9049HF4**

© 2011 Schneider Electric
All Rights Reserved

Class 9049 Rod Kits for Class 9038 Type D

Float Travel

Float travel is determined by the length of the hinge post and rod and by the float position. The float may be operated in three different positions. In Position 1, the contacts close when the liquid rises. In Position 2, the contacts open when the liquid rises. Use Table 27 to select the appropriate rod kit when ordering Class 9038 Types DG7, DW7, or DR7 alternators.

Table 27: Class 9049 Rod Kits for Class 9038 Type DG7, DW7, and DR7 Alternators

Float Travel for Class 9038 Types DG7, DW7, and DR7 Alternators Minimum Water Level Change (V = 2.63 in. / 67 mm)							
Catalog No.		**9049ER1**	**9049ER2**	**9049ER3**	**9049ER5**	**9049ER7**	**9049ER12**
Dimensions in. (mm)							
R		1.75 (44)	2.5 (64)	3.25 (83)	5.25 (133)	7.25 (184)	12.25 (311)
H [1]		8.25 (210)	9 (229)	9.5 (241)	11.75 (298)	13.75 (349)	18.75 (476)
A	**Min.**	0.75 (19)	0.63 (16)	0.5 (13)	0.13 (3)	0.25 (6)	0.38 (10)
	Max.	0.63 (16)	0.38 (10)	0.25 (6)	0.0 (0)	0.5 (13)	1.5 (38)
B	**Min.**	5 (127)	5.38 (137)	5.5 (140)	6.38 (162)	7 (178)	8.63 (219)
	Max.	5 (127)	5.25 (133)	5.5 (140)	6.25 (159)	7 (178)	8.75 (222)
C	**Min.**	4 (102)	4.25 (108)	4.38 (111)	5 (127)	5.5 (140)	6.75 (171)
	Max.	4.25 (108)	4.5 (114)	4.63 (118)	5.13 (130)	5.75 (146)	7.75 (197)
D	**Min.**	1.75 (44)	1.75 (44)	1.75 (44)	1.75 (44)	1.75 (44)	1.75 (44)
	Max.	1.5 (38)	1.38 (35)	1.25 (32)	1 (25)	0.88 (22)	0.63 (16)
F	**Min.**	6.75 (171)	7.13 (181)	7.25 (184)	8.13 (207)	8.75 (222)	10.38 (264)
	Max.	6.5 (165)	6.63 (168)	6.75 (171)	7.25 (184)	7.88 (200)	9.38 (238)
G	**Min.**	1 (25)	1 (25)	1 (25)	1 (25)	1 (25)	1 (25)
	Max.	1.5 (38)	1.5 (38)	1.5 (38)	1.75 (44)	2 (51)	2.5 (64)

1 Add 2.5 in. (64 mm) to **H** when using HF3 or HF4 floats.

Figure 23: Travel Dimensions

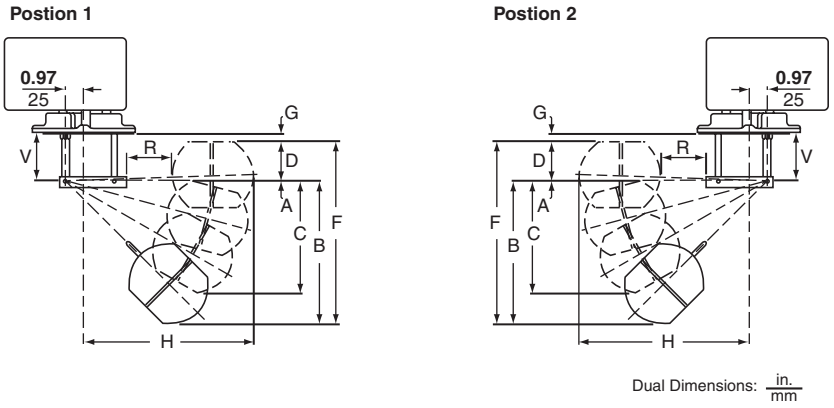

© 2011 Schneider Electric
All Rights Reserved

Use the following table to select the appropriate rod kit when ordering Class 9038 Types DG8, DW8, or DR8 alternators.

Table 28: Class 9049 Rod Kits for Use on Class 9038 Types DG8, DW8, and DR8 Alternators

Float Travel for Class 9038 Types DG8, DW8, and DR8 Alternators Minimum Water Level Change (V = 2.63 in. / 67 mm)							
Catalog No.		**9049ER1**	**9049ER2**	**9049ER3**	**9049ER5**	**9049ER7**	**9049ER12**
Dimensions in. (mm)							
R		1.75 (44)	2.5 (64)	3.25 (83)	5.25 (133)	7.25 (184)	12.25 (311)
H [1]		7.5 (191)	8.25 (210)	9 (229)	11 (279)	13 (330)	18 (457)
A	**Min.**	0.0 (0)	0.5 (13)	1 (25)	2 (51)	3 (76)	5.5 (140)
	Max.	1.25 (32)	1.5 (38)	2 (51)	3 (76)	4 (102)	6.5 (165)
B	**Min.**	8 (203)	8.75 (222)	9.5 (241)	11.5 (292)	13.5 (343)	18.5 (470)
C	**Min.**	6.5 (165)	7 (178)	7.75 (197)	9.5 (241)	11 (279)	14.75 (375)
	Max.	6.5 (165)	7 (178)	7.5 (1910	9 (229)	10.75 (273)	15 (381)
D [2]	**Min.**	2 (51)	1.75 (44)	1.5 (38)	1.25 (32)	0.75 (19)	0.5 (13)
	Max.	0.5 (13)	0.25 (6)	0.0 (0)	0.75 (19)	1.75 (44)	4.25 (108)
F	**Min.**	10 (254)	10.5 (267)	11 (279)	12.75 (324)	14.25 (362)	19 (483)
	Max.	8.5 (216)	9 (229)	9.5 (241)	10.75 (273)	11.75 (298)	14.25 (362)
G	**Min.**	1.5 (38)	1.5 (38)	1.75 (44)	2 (51)	2 (51)	2.25 (57)
	Max.	2.5 (64)	2.75 (70)	3 (76)	3.75 (95)	4.5 (114)	6.25 (159)

1 Add 2.5 in. (64 mm) to **H** when using HF3 or HF4 floats.

2 **D** is negative when the top of the float is below the horizontal centerline.

Use the following table to select the appropriate rod kit when ordering Class 9038 Types DG9, DW9, or DR9 alternators.

Table 29: Class 9049 Rod Kits for Class 9038 Type DG9, DW9, and DR9 Alternators

Float Travel for Class 9038 Types DG9, DW9, and DR9 Alternators Minimum Water Level Change (V = 4.69 in. / 119 mm)							
Catalog No.		**9049ER1**	**9049ER2**	**9049ER3**	**9049ER5**	**9049ER7**	**9049ER12**
Dimensions in. (mm)							
R		1.75 (44)	2.5 (64)	3.25 (83)	5.25 (133)	7.25 (184)	12.25 (311)
H [1]		8.25 (210)	9 (229)	9.5 (241)	11.75 (298)	13.75 (349)	18.75 (476)
A	**Min.**	1 (25)	1 (25)	0.88 (22)	0.63 (16)	0.25 (6)	0.13 (3)
	Max.	0.5 (13)	0.13 (3)	0.0 (0)	0.88 (22)	1.63 (41)	2.88 (73)
B	**Min.**	5.25 (133)	5.75 (146)	6 (152)	7.25 (184)	8.25 (210)	10.75 (273)
	Max.	5.25 (133)	5.63 (143)	5.88 (149)	7.13 (181)	8.25 (210)	11 (279)
C	**Min.**	4.5 (114)	4.75 (121)	5 (127)	5.75 (146)	6.5 (165)	8.38 (213)
	Max.	4.5 (114)	4.75 (121)	5 (127)	5.88 (149)	6.75 (171)	8.5 (216)
D	**Min.**	2 (51)	2 (51)	2 (51)	2 (51)	1.88 (48)	1.63 (41)
	Max.	1.5 (38)	1.25 (32)	1.13 (29)	0.75 (19)	0.5 (13)	0.5 (13)
F	**Min.**	7.25 (184)	7.75 (197)	8 (203)	9.25 (235)	10.13 (257)	12.38 (314)
	Max.	6.75 (171)	6.88 (175)	7 (178)	7.88 (200)	8.75 (222)	11.5 (292)
G	**Min.**	3 (76)	3 (76)	3 (76)	3 (76)	3.25 (83)	4 (102)
	Max.	3.75 (95)	4 (102)	4 (102)	4.38 (111)	4.63 (117)	5.75 (146)

1 Add 2.5 in. (64 mm) to **H** when using HF3 or HF4 floats.

© 2011 Schneider Electric
All Rights Reserved

Use the following table to select the appropriate rod kit when ordering Class 9038 Type DG10, DW10, or DR10 alternators.

Table 30: Class 9049 Rod Kits for Class 9038 Type DG10, DW10, and DR10 Alternators

Float Travel for Class 9038 Types DG10, DW10, and DR10 Alternators Minimum Water Level Change (V = 4.69 in. / 119 mm)							
Catalog No.		**9049ER1**	**9049ER2**	**9049ER3**	**9049ER5**	**9049ER7**	**9049ER12**
Dimensions in. (mm)							
R		1.75 (44)	2.5 (64)	3.25 (83)	5.25 (133)	7.25 (184)	12.25 (311)
H [1]		7.5 (191)	8.25 (210)	9 (229)	11 (279)	13 (330)	18 (457)
A	**Min.**	0.5 (13)	1 (25)	1.5 (38)	2.5 (64)	3.25 (83)	6 (152)
	Max.	1.5 (38)	2 (51)	2.5 (64)	4 (102)	5.5 (140)	9.25 (235)
B	**Min.**	8 (203)	8.75 (222)	9.5 (241)	11.5 (292)	13.5 (343)	18.5 (470)
C	**Min.**	7 (178)	7.75 (194)	8.25 (210)	10 (254)	11.5 (292)	15.5 (394)
	Max.	7 (178)	7.5 (191)	8.25 (210)	10 (254)	12 (305)	17 (432)
D [2]	**Min.**	1.75 (44)	1.75 (44)	1.5 (38)	1.25 (32)	1 (25)	0.5 (13)
	Max.	0.5 (13)	0.25 (6)	0.0 (0)	1 (25)	1.5 (38)	2.75 (70)
F	**Min.**	8.75 (222)	10.5 (267)	11 (279)	12.75 (324)	14.5 (368)	19 (483)
	Max.	8.5 (216)	9 (229)	9.5 (241)	10.5 (267)	12 (305)	15.75 (400)
G	**Min.**	3.25 (83)	3.5 (89)	3.5 (89)	3.75 (95)	4 (102)	4.75 (121)
	Max.	4.75 (121)	5 (127)	5.25 (133)	6 (152)	6.75 (171)	8.5 (216)

1 Add 2.5 in. (64 mm) to **H** when using HF3 or HF4 floats.

2 **D** is negative when the top of the float is below the horizontal centerline.

Figure 24: Type DG Dimensions

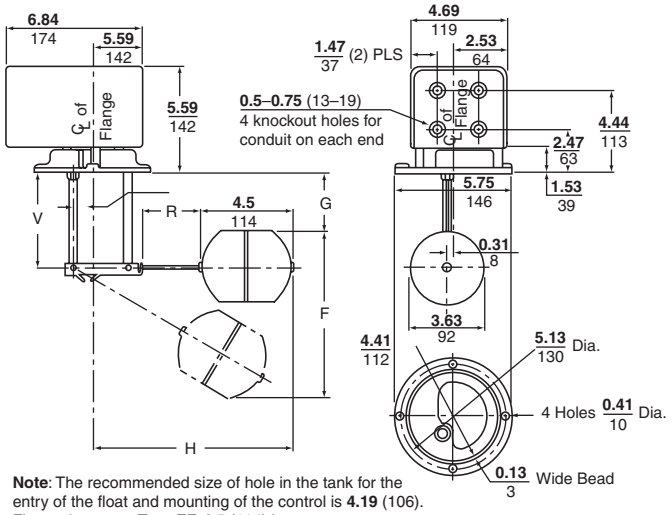

Note: The recommended size of hole in the tank for the entry of the float and mounting of the control is **4.19** (106).
Floats shown are Type EF, **4.5** (114) long.
Add **2.5** (64) to **H** if using Type HF Floats, which are **7.0** (178) long.

Figure 25: Type DR/DW Dimensions

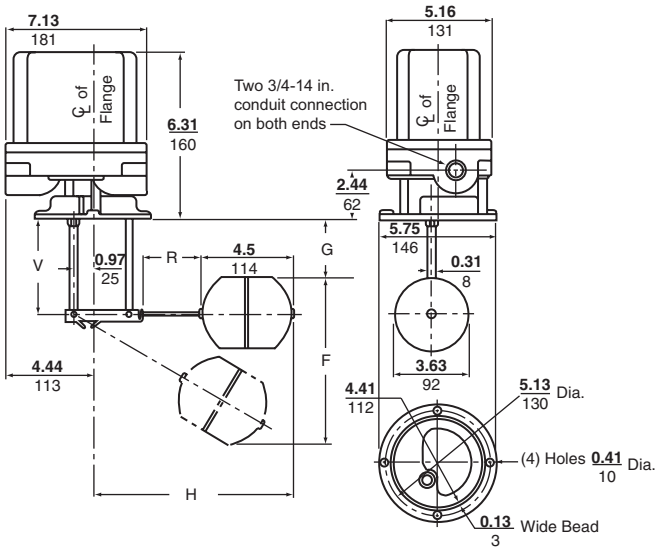

© 2011 Schneider Electric
All Rights Reserved

Class 9049 Accessories and Class 9998 Renewal Parts Kits

Table 31: Class 9049 Accessories

Catalog Number	Description	Equipment To Be Serviced
9049A6	7 in. Tapped at Top #304 Stainless Steel Float, 5 ft Brass Rod, 2 Stops	All 9036, 9038A
9049A6A	7 in. Tapped at Top #304 Stainless Steel Float, 5 ft Aluminum Rod, 2 Stops	All 9036, 9038A
9049A6C	7 in. Center Hole #304 Stainless Steel Float, 5 ft Brass Rod, 4 Stops	All 9036, 9038A
9049A6CA	7 in. Center Hole #304 Stainless Steel Float, 5 ft Aluminum Rod, 4 Stops	All 9036, 9038A
9049A6CS	7 in. Center Hole #316 Stainless Steel Float, 5 ft Stainless Steel Rod, 4 Stainless Steel Stops	All 9036, 9038A
9049A6S	7 in. Tapped at Top #316 Stainless Steel Float, 5 ft Stainless Steel Rod, 2 Stainless Steel Stops	All 9036, 9038A
9049AF1	7 in. Round Center Hole #304 Stainless Steel Replacement Float *(do not remove ballast)*	9049A6C, A6CA, DRA31
9049AF2	7 in. Round Center Hole #316 Stainless Steel Replacement Float *(do not remove ballast)*	9049A6CS, DRA32
9049AF3	7 in. Round Tapped at Top #304 Stainless Steel Replacement Float *(do not remove ballast)*	9049A6, A6A, DCA1, DCA3
9049AF4	7 in. Round Tapped at Top #316 Stainless Steel Replacement Float *(do not remove ballast)*	9049A6S, DCA2, DCA4
9049A13	Compensating Spring	9036GG
9049A15	Compensating Spring	9038AG
9049A19	Compensating Spring	9036DG
9049A20	Compensating Spring	9036DR, DW
9049A54	Mounting Bracket—Replacing Obsolete 9036A with 9036G	9036GG
9049A55	Mounting Bracket—Replacing 9036A (S or F1) with 9036G	9036GG
9049A58	Form R Lever	9036DG
9049EF1	#304 Stainless Steel Float *(do not remove ballast)*	9037E, 9038D
9049EF2	#316 Stainless Steel Float *(do not remove ballast)*	9037E, 9038D
9049ER1	1-3/4 in. Stainless Steel Rod	9037E, 9038D
9049ER2	2-1/2 in. Stainless Steel Rod	9037E, 9038D
9049ER3	3-1/4 in. Stainless Steel Rod	9037E, 9038D
9049ER5	5-1/4 in. Stainless Steel Rod	9037E, 9038D
9049ER7	7-1/4 in. Stainless Steel Rod	9037E, 9038D
9049ER12	12-1/4 in. Stainless Steel Rod	9037E, 9038D
9049GF1	#304 Stainless Steel Float *(do not remove ballast)*	9037G
9049GF2	#316 Stainless Steel Float *(do not remove ballast)*	9037G
9049HF3	#304 Stainless Steel Float *(do not remove ballast)*	9037H, 9038C, D [1]
9049HF4	#316 Stainless Steel Float *(do not remove ballast)*	9037H, 9038C, D [1]
9049T1	Additional Rod Kit: One 2-1/2 ft Section of Brass Rod, Connector	9049A6, A6C
9049T1A	Additional Rod Kit: One 2-1/2 ft Section of Aluminum Rod, Connector	9049A6A, A6CA
9049T1S	Additional Rod Kit: One 2-1/2 ft Section of Stainless Steel Rod, Connector	9049A6S, A6CS
9049UMS1	Universal Mounting Bracket	All 9036; 9038AG, AR, AW

1 Not recommended for 9038D mechanical alternators. 9049EF1 (#304 SS) and 9049EF2 (#316 SS) are recommended instead.

Renewal parts are generally available for Pump Control products with a current date code or with a numerical date code (such as 172, which corresponds to the first quarter of 1972). Parts are no longer available for devices manufactured before 1965.

Table 32: Class 9998 Renewal Parts Kits for Class 9036–9038 Devices

Catalog Number	Description	Equipment To Be Serviced
9998AO1	Replacement High-Level Alarm, Single-Pole Snap Switch, SPDT	Form **N5**
9998CO3	Replacement High-Level Alarm, Double-Pole Snap Switch, DPDT	Form **N25**
9998PC213	Replacement Switch Mechanism	9036GR, GW, Series C (All Except Form **H** and **R**)
9998PC214	Replacement Switch Mechanism	9036GR, GW, Series C (Form **R** Only)
9998PC215	Replacement Switch Mechanism	9036GR, GW, Series C (Form **H** Only)
9998PC216	Cover Gasket	9036, 9037 GW Only
9998PC242	Replacement Contact Kit	9036, 9037, 9038 (2 required)
9998PC286	Replacement Switch Mechanism	9036DR1, DW1, Series B, Form **C**
9998PC287	Replacement Switch Mechanism	9036DR1, DW1, Series B, Form **R**
9998PC319	Replacement Switch Mechanism	9035DG11
9998PC334	Replacement Switch Mechanism	9035DR10, DW10, DR30, DW30
9998PC335	Replacement Switch Mechanism	9035DR11, DW11, DR31, DW31

© 2011 Schneider Electric
All Rights Reserved

© 2011 Schneider Electric
All Rights Reserved

INDEX

9013FSG 4
9013FTG 4
9013FRG 5
9013FHG 5
9049A6 8
9049A6A 8
9049A6S 8
9049A6C 8
9049A6CA 8
9049A6CS 8
9049T1 8
9049T1A 8
9049T1S 8
9036DG2 49
9036DG2R 49
9036GG2 49
9036GG2R 49
9036DW31 49
9036DW31R 49
9036GW1 49
9036GW1R 49
9036DR31 49
9036DR31R 49
9036GR1 49
9036GR1R 49
9049A58 49
9049A19 49
9049A20 49
9049A13 49
9049A13 49
9049A6 50
9049A6A 50
9049A6S 50
9049A6C 50
9049A6CA 50
9049A6CS 50
9049T1 50
9049T1A 50
9049T1S 50
9036FG30 52
9049A60 52
9049A61 52
9049EF1 53
9049EF2 53
9049ER1 55
9049ER2 55
9049ER3 55
9049ER5 55
9049ER7 55
9049ER12 55
9049ER1 56
9049ER2 56
9049ER3 56
9049ER5 56
9049ER7 56
9049ER12 56
9049ER1 56
9049ER2 56
9049ER3 56
9049ER5 56
9049ER7 56
9049ER12 56
9037HG34 57
9037HG33 57
9037HG36 57
9037HG35 57
9037HG38 57
9037HG37 57
9037HG30 57
9037HG39 57
9037HG32 57
9037HG31 57
9037HW34 57
9037HW33 57
9037HW36 57
9037HW35 57
9037HW38 57
9037HW37 57
9037HW30 57
9037HW39 57
9037HW32 57
9037HW31 57
9037HR34 57
9037HR33 57
9037HR36 57
9037HR35 57
9037HR38 57
9037HR37 57
9037HR30 57
9037HR39 57
9037HR32 57
9037HR31 57
9038AG1 59
9038AW1 59
9038AR1 59
9049A15 59
9038AG1 60
9038AG1R 60
9038AR1/9038AW1 60
9038AR1R/9038AW1R 60
9049A6 60
9049A6A 60
9049A6S 60
9049A6C 60
9049A6CA 60
9049A6CS 60
9049T1 60
9049T1A 60
9049T1S 60
9038CG32 61
9038CG34 61
9038CG36 61
9038CG31 61
9038CG33 61
9038CG35 61
9038CW32 61
9038CW34 61
9038CW36 61
9038CW31 61
9038CW33 61
9038CW35 61
9038CR32 61
9038CR34 61
9038CW36 61
9038CR31 61
9038CR33 61
9038CW35 61
9038DG7 63
9038DG8 63
9038DG9 63
9038DG10 63
9038DW7 63
9038DW8 63
9038DW9 63
9038DW10 63
9038DR7 63
9038DR8 63
9038DR9 63
9038DR10 63
9049EF1 63
9049EF2 63
9049HF3 63
9049HF4 63
9049ER1 64
9049ER2 64
9049ER3 64
9049ER5 64
9049ER7 64
9049ER12 64
9049ER1 65
9049ER2 65
9049ER3 65
9049ER5 65
9049ER7 65
9049ER12 65
9049ER1 65
9049ER2 65
9049ER3 65
9049ER5 65
9049ER7 65
9049ER12 65
9049ER1 66
9049ER2 66
9049ER3 66
9049ER5 66
9049ER7 66
9049ER12 66
9049A6 67
9049A6A 67
9049A6C 67
9049A6CA 67
9049A6CS 67
9049A6S 67
9049AF1 67
9049AF2 67
9049AF3 67
9049AF4 67
9049A13 67
9049A15 67
9049A19 67
9049A20 67
9049A54 67
9049A55 67
9049A58 67
9049EF1 67
9049EF2 67
9049ER1 67
9049ER2 67
9049ER3 67
9049ER5 67
9049ER7 67
9049ER12 67
9049GF1 67
9049GF2 67
9049HF3 67
9049HF4 67
9049T1 67
9049T1A 67
9049T1S 67
9049UMS1 67

© 2011 Schneider Electric
All Rights Reserved

Schneider Electric USA, Inc.
8001 Knightdale Blvd.
Knightdale, NC 27545 USA
1-888-Square D (1-888-778-2733)
www.schneider-electric.us

Square D™, Schneider Electric™, and Pumptrol™ are trademarks or registered trademarks of Schneider Electric. Other trademarks used herein are the property of their respective owners.

9034CT9701R01/11 © 2006–2011 Schneider Electric All Rights Reserved
Replaces 9013CT9701R6/06 dated January 2007 and 9034CT9701R2/08 dated May 2008.

03/2011