IDEC

Think Automation and beyond...

Emergency Stop Switches

IDEC CORPORATION

sales@prom-elec.com / ООО ПРОМЭЛЕКТРОНИКА

Emergency Stop Switches (Selection Guide)

Series	Emergency Stop Switch				
Name	ø16mm X6 Series Pushlock Pull / Turn Reset (Unibody)	ø16mm XA Series Pushlock Pull / Turn Reset (Unibody)	ø16mm XA Series Pushlock Pull / Turn Reset (with Removable Contact Block)	ø22mm XW Series Pushlock Pull / Turn Reset	ø22mm HW Series Pushlock Turn Reset (Unibody) (Plastic/Flush Bezel)
Shape					
Safety Category	4	4	4	4	4
Applicable Standards	EN60947-5-5 UL508 CSA C22.2 No.14 GB14048.5	EN60947-5-5 UL508 CSA C22.2 No.14 GB14048.5	EN60947-5-5 UL508 UL991 NFPA79 CSA C22.2 No.14 GB14048.5	EN60947-5-5 UL508 UL991 NFPA79 CSA C22.2 No.14 GB14048.5	EN60947-5-5 UL508 CSA C22.2 No.14 GB14048.5
Mark					
Page	8	13	15	21	32

Series	Emergency Stop Switch			
Name	ø22mm HW Series Pushlock Turn Reset (with Removable Contact Block)	ø22mm HW Series Pushlock Key Reset	ø22mm HW Series Push-Pull	ø22mm YW Series Pushlock Pull / Turn Reset
Shape				
Safety Category	4	4	4	4
Applicable Standards	EN60947-5-5 UL508 CSA C22.2 No.14 GB14048.5	EN60947-5-5 UL508 CSA C22.2 No.14 GB14048.5	EN60947-5-5 UL508 CSA C22.2 No.14 GB14048.5	EN60947-5-5 UL508 CSA C22.2 No.14 GB14048.5
Mark				
Page	34	35	35	40

Series	Emergency Stop Switch		
Name	ø30mm XN Series Pushlock Pull / Turn Reset (Plastic/Flush Bezel)	ø30mm XN Series Pushlock Turn Reset (Padlockable)	ø30mm HN Series Pushlock Turn Reset (Unibody)
Shape	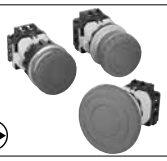		
Safety Category	4	4	4
Applicable Standards	EN60947-5-5 UL508 UL991 NFPA79 CSA C22.2 No.14 GB14048.5	EN60947-5-5 UL508 UL991 NFPA79 CSA C22.2 No.14 GB14048.5	EN60947-5-5 UL508 CSA C22.2 No.14 GB14048.5
Mark			
Page	48	50	55

Series	SEMI Emergency Off (EMO) Switch			
Name	ø16mm XA Series EMO Switch Pushlock Pull / Turn Reset	ø22mm XW Series EMO Switch Pushlock Pull / Turn Reset	ø22 HW Series EMO Switch Pushlock Turn Reset	Switch Guard for ø16mm XA Series ø22mm HW/XW Series
Shape				
Safety Category	4	4	4	–
Applicable Standards	EN60947-5-5 UL508 CSA C22.2 No.14 GB14048.5	EN60947-5-5 UL508 CSA C22.2 No.14 GB14048.5	EN60947-5-5 UL508 CSA C22.2 No.14 GB14048.5	SEMI S2 0706
Mark				–
Page	58	58	58	60

Series	Stop Switch				
Name	ø16mm XA Series Pushlock Pull / Turn Reset (with Removable Contact Block)	ø16mm XA Series Pushlock Pull / Turn Reset (Unibody)	ø22 XW Series Pushlock Pull / Turn Reset	ø22 HW Series Pushlock Turn Reset Pushlock Pull	White Switch Guard for ø22mm HW/XW Series
Shape					
Safety Category	–				
Applicable Standards	EN60947-5-1 UL508 CSA C22.2 No.14 GB14048.5	EN60947-5-1 UL508 CSA C22.2 No.14 GB14048.5	EN60947-5-1 UL508 CSA C22.2 No.14 GB14048.5	UL508 CSA C22.2 No.14 EN60947-5-5 GB14048.5	–
Mark					–
Page	62	62	63	63	64

Emergency Stop Switches Selection Diagram

ISO / IEC Standards and Emergency Stop Switches

ISO 13850 4.4.1 mushroom-type push-buttons

ISO 13850 4.4.4 The command shall be maintained by engagement (latching-in) of the actuating means.

ISO 13850 4.4.4 The actuator of the emergency stop device shall be colored red.

IEC 60947-5-5 5. Electrical requirements 5.2 All normally closed contact elements of an emergency stop device shall have a direct opening action (positive opening action, according to annex K of IEC 60947-5-1.

ISO 13850 4.4.6 As far as a background exists behind the actuator and as far as is practicable, it shall be colored yellow.

Emergency Stop Switch

Reverse Energy Structure Safe Break Action

- ø16mm Mount Hole
  - Non illuminated
    - Detachable Contact Block
      - Pushlock Pull or Turn Reset
        - ø29mm Button
        - ø40mm Button
    - Unibody (no safe break action)
      - Pushlock Pull or Turn Reset
        - ø29mm Button
        - ø40mm Button
  - Illuminated
    - Detachable Contact Block
      - Pushlock Pull or Turn Reset
        - ø29mm Button
        - ø40mm Button

Reverse Energy Structure Safe Break Action

- ø22mm Mount Hole
  - Non illuminated
    - Detachable Contact Block
      - Pushlock Pull or Turn Reset
        - ø40mm Button
        - ø60mm Button
  - Illuminated
    - Detachable Contact Block
      - Pushlock Pull or Turn Reset
        - ø40mm Button

Model	Applicable Standards	Mark	Page
XA1E-BV3 (Solder, PC Board Terminal)	EN60947-5-5 UL508/UL991 NFPA79 CSA C22.2 No.14 GB14048.5		16
XA1E-BV4 (Solder, PC Board Terminal)	EN60947-5-5 UL508/UL991 NFPA79 CSA C22.2 No.14 GB14048.5		16
AB6E-3BV (Solder Terminal)	EN60947-5-5 UL508 CSA C22.2 No.14 GB14048.5		9
XA1E-BV3U (Solder, Solder/ Tab #110 Terminal)	EN60947-5-5 UL508 CSA C22.2 No.14 GB14048.5		14
AB6E-4BV (Solder Terminal)	EN60947-5-5 UL508 CSA C22.2 No.14 GB14048.5		9
XA1E-BV4U (Solder, Solder/ Tab #110 Terminal)	EN60947-5-5 UL508 CSA C22.2 No.14 GB14048.5		14
XA1E-LV3 (Solder, PC Board Terminal)	EN60947-5-5 UL508/UL991 NFPA79 CSA C22.2 No.14 GB14048.5		16
XA1E-LV4 (Solder, PC Board Terminal)	EN60947-5-5 UL508/UL991 NFPA79 CSA C22.2 No.14 GB14048.5		16
XW1E-BV4 (Screw Terminal)	EN60947-5-5 UL508/UL991 NFPA79 CSA C22.2 No.14 GB14048.5	EMERGENCY STOP DEVICE	22
XW1E-BV4 (Solder, PC Board Terminal)	EN60947-5-5 UL508/UL991 NFPA79 CSA C22.2 No.14 GB14048.5		22
XW1E-BV4 (Connector)	EN60947-5-5 UL508		22
XW1E-BV5 (Screw Terminal)	EN60947-5-5 UL508/UL991 NFPA79 CSA C22.2 No.14 GB14048.5	EMERGENCY STOP DEVICE	22
XW1E-LV4 (Screw Terminal)	EN60947-5-5 UL508/UL991 NFPA79 CSA C22.2 No.14 GB14048.5	EMERGENCY STOP DEVICE	23
XW1E-LV4 (Solder, PC Board Terminal)	EN60947-5-5 UL508/UL991 NFPA79 CSA C22.2 No.14 GB14048.5		23

Continued on Next Page

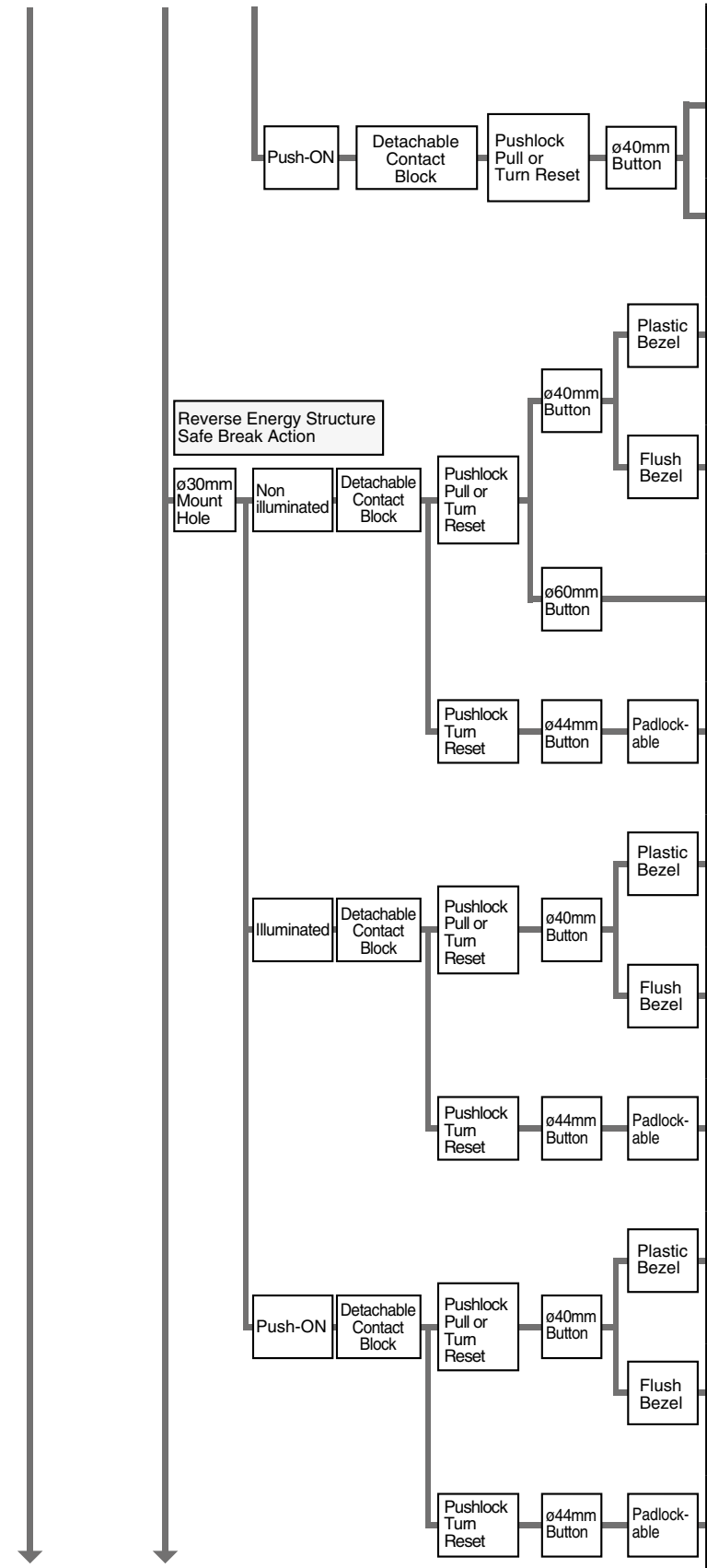

Model	Applicable Standards	Mark	Page
XW1E-TV4 (Screw Terminal)	EN60947-5-5 UL508/UL991 NFPA79 CSA C22.2 No.14 GB14048.5		23
XW1E-TV4 (Connector)	EN60947-5-5 UL508		23
XN1E-BV4 (Plastic Bezel)	EN60947-5-5 UL508/UL991 NFPA79 CSA C22.2 No.14 GB14048.5		48
XN5E-BV4 (Flush Bezel)	EN60947-5-5 UL508/UL991 NFPA79 CSA C22.2 No.14 GB14048.5		49
XN1E-BV5 (Plastic Bezel)	EN60947-5-5 UL508/UL991 NFPA79 CSA C22.2 No.14 GB14048.5		48
XN4E-BL4 (Padlockable)	EN60947-5-5 UL508/UL991 NFPA79 CSA C22.2 No.14 GB14048.5		50
XN1E-LV4 (Plastic Bezel)	EN60947-5-5 UL508/UL991 NFPA79 CSA C22.2 No.14 GB14048.5		48
XN5E-LV4 (Flush Bezel)	EN60947-5-5 UL508/UL991 NFPA79 CSA C22.2 No.14 GB14048.5		49
XN4E-LL4 (Padlockable)	EN60947-5-5 UL508/UL991 NFPA79 CSA C22.2 No.14 GB14048.5		50
XN1E-TV4 (Plastic Bezel)	EN60947-5-5 UL508/UL991 NFPA79 CSA C22.2 No.14 GB14048.5		48
XN5E-TV4 (Flush Bezel)	EN60947-5-5 UL508/UL991 NFPA79 CSA C22.2 No.14 GB14048.5		49
XN4E-TL4 (Padlockable)	EN60947-5-5 UL508/UL991 NFPA79 CSA C22.2 No.14 GB14048.5		50

Continued on Next Page

Emergency Stop Switches Selection Diagram

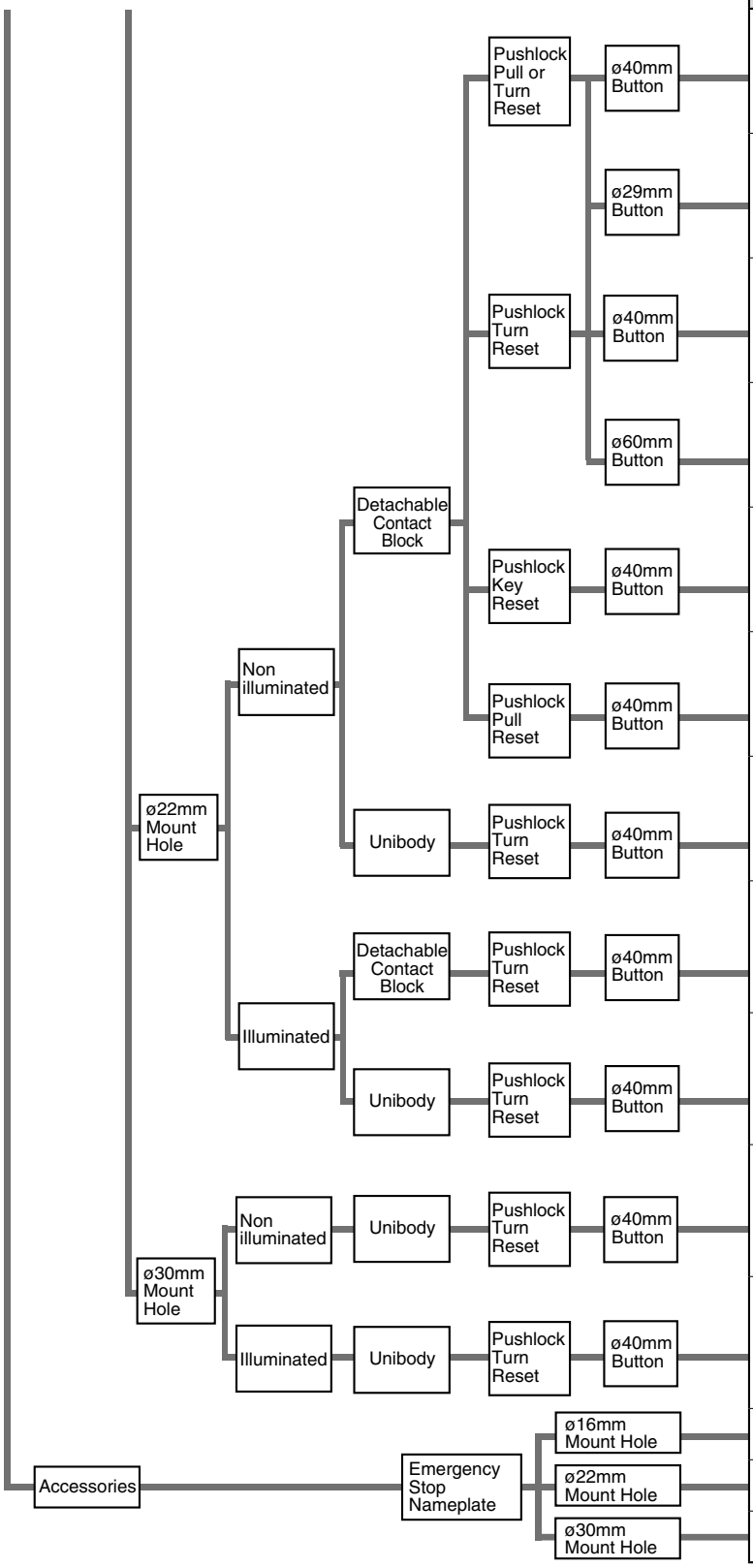

Model	Applicable Standards	Mark	Page
YW1B-V4	EN60947-5-5 UL508 CSA C22.2 No.14 GB14048.5		41
HW1B-V3	EN60947-5-5 UL508 CSA C22.2 No.14 GB14048.5		34
HW1B-V4	EN60947-5-5 UL508 CSA C22.2 No.14 GB14048.5		34
HW1B-V5	EN60947-5-5 UL508 CSA C22.2 No.14 GB14048.5		34
HW1B-X4	EN60947-5-5 UL508 CSA C22.2 No.14 GB14048.5		35
HW1B-Y2	EN60947-5-5 UL508 CSA C22.2 No.14 GB14048.5		35
HW1E-BV4	EN60947-5-5 UL508 CSA C22.2 No.14 GB14048.5		32
YW1L-V4	EN60947-5-5 UL508 CSA C22.2 No.14 GB14048.5		41
HW1E-LV4	EN60947-5-5 UL508 CSA C22.2 No.14 GB14048.5		32
HN1E-BV4	EN60947-5-5 UL508 CSA C22.2 No.14 GB14048.5		55
HN1E-LV4	EN60947-5-5 UL508 CSA C22.2 No.14 GB14048.5		55
HAAV HWAV HNAV	IEC 60947-5-5 IEC 60204-1	–	11 28 53

Switch and Background Color Selection Chart (IEC/SEMI/SEMATECH)

Emergency Stop

IEC 60947-5-5
IEC 60204-1
ISO 13850

- Red colored
- Mushroom
- Yellow background
- Shall be positioned for easy access

Red button

ø16mm mounting hole
ø22mm mounting hole
ø30mm mounting hole

Switch	Applicable Nameplate (Note 1)	Applicable Switch Guard
XA1E HA1E HA1B-V	HAAV-0, HAAV-27 HAAV4-0 HAAV4-27	N/A
XW1E HW1E HW1B-V, HW1B-X HW1B-Y	HWAV-0-Y, HWAV-27-Y HWAV5-0 HWAV5-27 HWAV5F-27	N/A
XN1E XN4E XN5E HN1E	HNAV-0 HNAV-27	N/A

Emergency Off (EMO)

SEMATECH Application Guide for SEMI S2-93

Red and mushroom shaped button

- Yellow background
- EMO or Emergency Off labeled

When installing a guard

- Guard diameter ø75mm minimum
- Button recessed from the guard no more than 3mm

Emergency Off (EMO)

SEMI S2-0706

- Red and mushroom shaped button
- Yellow background
- EMO or Emergency Off labeled

Red button (EMO marking)

Red button

ø16mm mounting hole
ø22mm mounting hole
Yellow guard
White guard
ø16mm mounting hole
ø22mm mounting hole
Yellow guard
White guard
ø30mm mounting hole

Switch	Applicable Nameplate (Note 1) / EMO label	Applicable Switch Guard	
		SEMI	SEMATECH
XA1E-BV4∗∗RH-EMO	HAAV4-0	XA9Z-KG1 (Note 2)	————
XW1E-BV4∗∗RH-EMO HW1B-V4∗∗R-EMO	HWAV-0-Y	HW9Z-KG1 (Note 2) HW9Z-KG2 (Note 2) HW9Z-KG3 (Note 2) HW9Z-KG4 (Note 2) HW9Z-KG5	HW9Z-KG2 (Note 2) HW9Z-KG4 (Note 2) HW9Z-KG5
XW1E-BV4∗∗RH-EMO HW1B-V4∗∗R-EMO	HWAV-0-Y	HW9Z-KG5-W	HW9Z-KG5-W
XA1E HA1E HA1B-V	HAAV-0, HAAV4-0 in combination with HW9Z-EMO-NPP	XA9Z-KG1 (Note 2)	————
XW1E HW1E HW1B-V (Note 4) HW1B-X HW1B-Y	HWAV-74-Y, HWAV-0-Y in combination with HW9Z-EMO-NPP	HW9Z-KG1 (Note 2) HW9Z-KG2 (Note 2) HW9Z-KG3 (Note 2) HW9Z-KG4 (Note 2) HW9Z-KG5 (Note 3)	HW9Z-KG2 (Note 2) HW9Z-KG4 (Note 2) HW9Z-KG5 (Note 3)
XW1E HW1E HW1B-V (Note 4) HW1B-X HW1B-Y	HWAV-74-Y, HWAV-0-Y in combination with HW9Z-EMO-NPP	HW9Z-KG5-W (Note 3)	HW9Z-KG5-W (Note 3)
XN1E XN4E XN5E HN1E	HNAV-0 in combination with HW9Z-EMO-NPP	————	————

Local/Partial Shut Down

SEMI S26-0308

- Should not use the combination of red button with yellow background
- Should not be labeled as "EMO" or "Emergency Off," or the equivalent.

Note: Stop switch (yellow button) should not be labeled as "EMS" or "Emergency Stop."

Yellow Button

ø16mm mounting hole
ø22mm mounting hole

Switch	Applicable Nameplate	Applicable Switch Guard
XA1E-BV∗∗∗Y HA1E-V2S∗Y	HAAV-0-W HAAV4-0-W	————
XW1E-BV4∗∗Y HW1B-V∗∗∗Y HW1B-Y2∗∗Y	HWAV-0-W HWAV5-0-W	HW9Z-KG4-W (Note 2) HW9Z-KG5-W (Note 3)

Note 1: Marking plate legend
-0 (blank), -27 (EMERGENCY STOP), -74 (EMERGENCY OFF)
Note 2: Cannot be used with a nameplate.
Note 3: Cannot be used with HWAV5-∗.
Note 4: HW1B-V5 switch cannot be used with a switch guard.

ø16 X6 Series Emergency Stop Switches (Unibody)

Third-generation emergency stop switch with Reverse Energy Structure
Smallest in its class

- Two button sizes—ø30mm and ø40mm
- Two button colors—red for emergency stop switch and yellow for stop switch
- Two ways of resetting —pulling and turning.
- UL, c-UL recognized, EN compliant.
- Safety lock mechanism (IEC 60947-5-5; 6.2)
- Direct opening action (IEC 60947-5-5; 5.2, IEC 60947-5-1, Annex K)
- Degree of protection: IP65 (IEC60529)

Standards

Applicable Standards	Mark	File No. or Organization
UL508 CSA C22.2 No.14	c UL us	UL/c-UL Recognition File No.E68961
EN60947-5-1 EN60947-5-5 (note)	TÜV	TÜV SÜD
	CE	EU low voltage directive
GB14048.5	CCC	CCC No. 2012010305525957 (Stop switch: CCC No. 2012010305525958)

- Stop switch (yellow button) is EN60947-5-1.

Contact Ratings

Rated Insulation Voltage (Ui)				250V		
Rated Thermal Current (Ith)				5A		
Rated Operating Voltage (Ue)				30V	125V	250V
Rated Operating Current (Note)	Main Contacts	AC 50/60 Hz	Resistive Load (AC-12)	–	5A	3A
			Inductive Load (AC-15)	–	1.5A	0.75A
		DC	Resistive Load (DC-12)	2A	0.4A	0.2A
			Inductive Load (DC-13)	1A	0.22A	0.1A

- Minimum applicable load: 5V AC/DC, 1 mA (reference value) (May vary depending on the operating conditions and load)
- Operational current represents the classification by making and breaking currents (IEC 60947-5-1).

Note:
TÜV/CCC rating: AC-15 0.75A/250V, DC-13 1A/30V
UL rating: Standard Duty AC 0.75A/250V
Standard Duty DC 1A/30V

Specifications

Applicable Standards	IEC 60947-5-1, EN 60947-5-1 IEC 60947-5-5 (Note), EN 60947-5-5 (Note) JIS C8201-5-1, JIS C8201-5-5, UL508, CSA C22.2 No.14, GB14048.5
Operating Temperature	–25 to +60°C (no freezing)
Storage Temperature	–45 to +80°C (no freezing)
Operating Humidity	45 to 85% RH (no condensation)
Operating Force	Push to lock: 10.5N Pull to reset: 8.8N Turn to reset: 0.17 N·m
Minimum Force Required for Direct Opening Action	40N
Minimum Operator Stroke Required for Direct Opening Action	4.5 mm
Maximum Operator Stroke	4.5 mm
Contact Resistance	50 mΩ maximum (initial value)
Insulation Resistance	100 MΩ minimum (500V DC megger)
Overvoltage Category	II
Impulse Withstand Voltage	2.5 kV
Pollution Degree	3
Operation Frequency	900 operations/hour
Shock Resistance	Operation extremes: 150 m/s^2 Damage limits: 1000 m/s^2
Vibration Resistance	Operation extremes: 10 to 500 Hz amplitude 0.35 mm, acceleration 50 m/s^2 Damage limits: 10 to 500 Hz, amplitude 0.35 mm, acceleration 50 m/s^2
Mechanical Life	100,000 operations minimum
Electrical Life	100,000 operations minimum
Degree of Protection	IP65 (IEC 60529)
Short-circuit Protection	250V/10A fuse (Type aM IEC 60269-1/IEC 60269-2)
Conditional Short-circuit Current	1000A
Terminal Style	Solder terminal
Recommended Tightening Torque for Locking Ring	0.88 N·m
Applicable Wire Size	1.25 mm^2 maximum
Terminal Soldering Condition	310 to 350°C, within 3 seconds
Weight (approx.)	ø30mm button: 13g ø40mm button: 16g

Note: Except for stop switch (yellow button)

X6 Series Emergency Stop Switches (Unibody) ø16

Unmarked

Pushlock Pull/Turn Reset Switch (Solder Terminal)

Package quantity: 1

Shape	Main Contact (NC)	Part No.
ø30mm Mushroom	1NC	**AB6E-3BV01PRH**
	2NC	**AB6E-3BV02PRH**
ø40mm Mushroom	1NC	**AB6E-4BV01PRH**
	2NC	**AB6E-4BV02PRH**

• Pushlock pull/turn reset switches are locked when pressed, and reset when pulled or turned clockwise.

Arrow Marked

Pushlock Pull/Turn Reset Switch (Solder Terminal)

Package quantity: 1

Shape	Main Contact (NC)	Part No.
ø30mm Mushroom	1NC	**AB6E-3BV01PRM**
	2NC	**AB6E-3BV02PRM**
ø40mm Mushroom	1NC	**AB6E-4BV01PRM**
	2NC	**AB6E-4BV02PRM**

• Pushlock pull/turn reset switches are locked when pressed, and reset when pulled or turned clockwise.

Dimensions

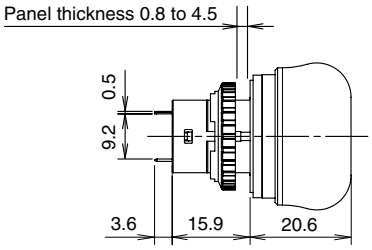

Solder terminal
(Depth behind the panel: 19.5 mm)

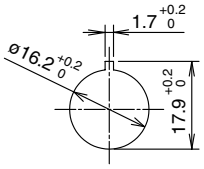

Mounting Hole Layout

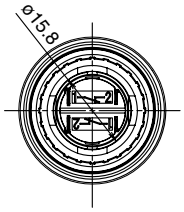

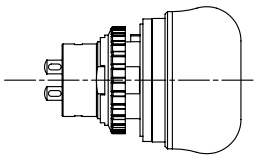

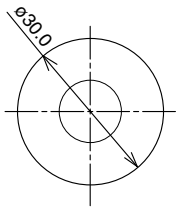

Unmarked

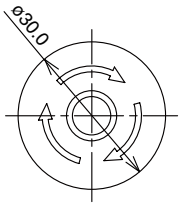

Arrow Marked

ø30mm Button

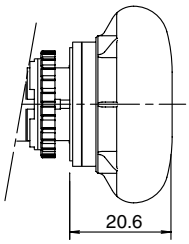

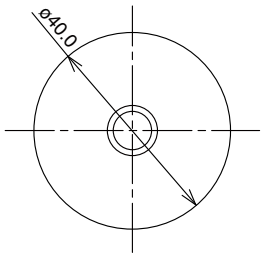

Unmarked

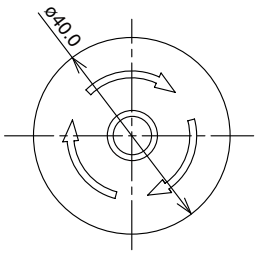

Arrow Marked

ø40mm Button

All dimensions in mm.

Mounting Hole Layout

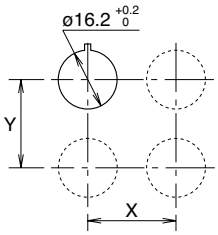

The values shown on the left are the minimum dimensions for mounting with other ø16 mm pushbuttons. For other control units of different sizes and styles, determine the values according to dimensions, operation, and wiring.

	X	Y
ø30 mm Button	40 mm min.	40mm min.
ø40 mm Button	50 mm min.	50mm min.

Terminal Arrangement (Bottom View)

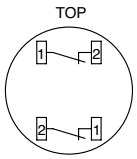

1NC: Terminals located near the TOP marking

Accessories

Shape	Material	Part No.	Package Quantity	Remarks
Locking Ring Wrench	Metal (nickel-plated brass)	**MT-001**	1	• Used to tighten the locking ring when installing the X6 switch onto a panel.
Locking Ring	Polyamide	**XA9Z-LNPN10**	10	• Black

X6 Series Emergency Stop Switches (Unibody) ø16

Nameplate (for ø16 Emergency Stop Switches)

Package quantity: 1

Description	Legend	Part No.	Material	Background Color	Legend Color
For ø30mm Button	Blank	**HAAV-0**	Polyamide	Yellow	Black
	EMERGENCY STOP	**HAAV-27**			
For ø40mm Button	Blank	**HAAV4-0**			
	EMERGENCY STOP	**HAAV4-27**			

• Cannot be used with switch guard.

Dimensions

Nameplate for ø30mm Button HAAV-∗

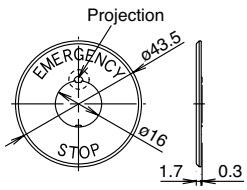

Nameplate for ø40mm Button HAAV4-∗

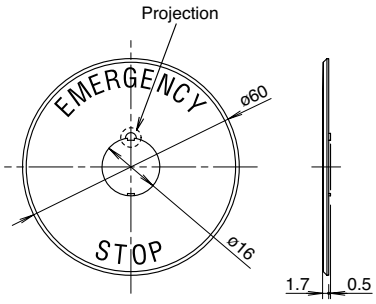

• Remove the projection from the nameplate using pliers, otherwise the switch cannot be installed.
• Panel thickness when using a nameplate: 0.5 to 3 mm

SEMI S2 Compliant Switch Guard

Package quantity: 1

Shape	Material	Part No.	Remarks
Switch Guard	Polyamide (PA6)	**XA9Z-KG1**	• IP65 degree of protection • Color: yellow (Munsell 2.5Y8/10 or equivalent) • Cannot be used with nameplate.

Switch Guard XA9Z-KG1

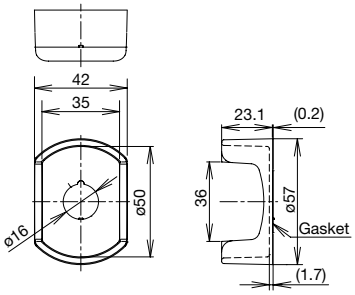

• Panel thickness when using a nameplate: 0.5 to 3 mm

Note:
Switch guards have been designed for applications in semiconductor manufacturing equipment only. Do not use the switch guards with emergency stop switches which are installed on other machines such as machine tools or food processing machines. Machinery Directive of the European Commission and IEC 60204-1 require that emergency stop switches be installed in a readily accessible area, and the usage of switch guards is not permitted.

Nameplates (white)

Shape	Description	Part No.	Material	Plate Color	Legend
For ø16mm Series	For ø29mm Mushroom	**HAAV-0-W**	Polyamide	White (Munsell N9.5)	Blank
	For ø49mm Mushroom	**HAAV4-0-W**			

⚠ Safety Precautions

- Turn off power to the X6 series units before installation, removal, wiring, maintenance, and inspection. Failure to turn power off may cause electrical shocks or fire hazard.
- For wiring, use wires of proper size to meet the voltage and current requirements and solder properly. Improper soldering may cause overheating and create fire hazards.

Instructions

Panel Mounting

Remove the locking ring from the operator and check that the rubber gasket is in place. Insert the operator from panel front into the panel hole. Face the side with the projection upward, and tighten the locking ring using the locking ring wrench MT-001.

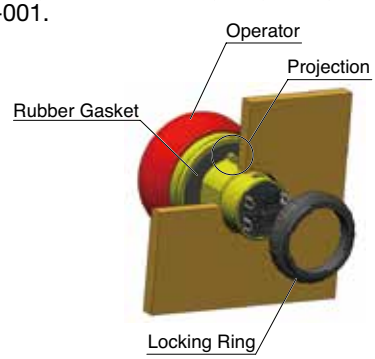

Notes for Panel Mounting

Using the locking ring wrench MT-001, tighten the locking ring to a torque of 0.88 N·m. Do not use pliers. Do not apply excessive force, otherwise the locking ring will become damaged.

Wiring

1. Applicable wire size is 1.25 mm^2 maximum.
2. Solder the terminals using a soldering iron at 310 to 350°C for 3 seconds maximum. Do not use flow or dip soldering. SnAgCu type lead-free solder is recommended. Make sure that the soldering iron touches the terminals only, not plastic parts. Do not apply external force such as bending the terminals or applying tensile force on the wires.
3. Use a non-corrosive rosin flux. To prevent the flux from entering the switch while soldering, face the terminals downward.

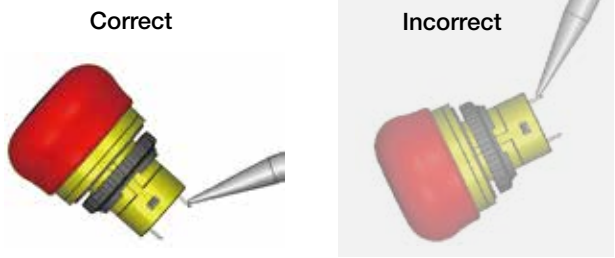

4. Because the terminal spacing is narrow, use protective tubes or heat shrinkable tubes to avoid burning the wire sheath or short circuit.
5. Apply force on the terminals in the vertical direction to the panel only, otherwise the terminals will be damaged.

Contact Bounce

When the button is reset by pulling or turning, the NC contacts will bounce. When designing a control circuit, take the contact bounce time into consideration (reference value: 20 ms).

Handling

Do not expose the switch to excessive shock and vibrations, otherwise the switch may be deformed or damaged, causing malfunction or operation failure.

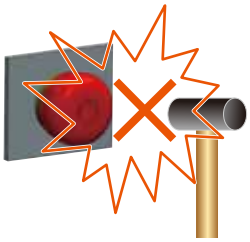

ø16 XA Series Emergency Stop Switches (Unibody)

Small, unibody emergency stop switches suitable for equipment with small mounting space. Requires only ø16mm × 19.5mm for installation.

- ø29mm and ø40mm mushroom operators
- Degree of protection IP65 and IP40 (IEC 60529)
- Dark red (Munsell 5R4/12) and bright red (Munsell 7.5R4.5/14) colors for operators of emergency stop switches, and yellow/gray for stop switch operators.
- Gold-plated crossbar contacts
- Push-to-lock, pull or turn-to-reset operator
- UL, c-UL recognized. EN compliant.
- Safety lock mechanism (IEC 60947-5-5, 6.2)
- Direct opening action mechanism (IEC 60947-5-5, 5.2, IEC60947-5-1, Annex K)

Standards

Applicable Standards	Mark	File No. or Organization
UL508 CSA C22.2 No.14	c UL us	UL/c-UL Recognition File No.E68961
EN60947-5-1 EN60947-5-5 (note)	TÜV	TÜV SÜD
	CE	EU Low Voltage Directive
GB14048.5	CCC	CCC No. 2008010305286343

Note: Except for stop switch (yellow and gray button)

Contact Ratings

Rated Insulation Voltage (Ui)			250V		
Thermal Current (Ith)			5A		
Rated Operating Voltage (Ue)			30V	125V	250V
Rated Operating Current	AC 50/60Hz	Resistive Load (AC-12)	—	5A	3A
		Inductive Load (AC-15)	—	3A	1.5A
	DC	Resistive Load (DC-12)	2A	0.4A	0.2A
		Inductive Load (DC-13)	1A	0.22A	0.1A

- Minimum applicable load: 5V AC/DC, 1 mA (reference value) (May vary depending on the operating conditions and load.)
- The rated operating currents are measured at resistive/inductive loads as specified in IEC 60947-5-1.

Specifications

Applicable Standards	IEC 60947-5-1, EN 60947-5-1 IEC 60947-5-5 (Note), EN 60947-5-5 (Note) JIS C8201-5-1, UL508, CSA C22.2 No.14 GB14048.5
Operating Temperature	–25 to +60°C (no freezing)
Storage Temperature	–45 to +80°C (no freezing)
Operating Humidity	45 to 85% RH (no condensation)
Operating Force	Push-to-lock: 10.5N Pull to reset: 10N Turn to reset: 0.16 N·m
Minimum Force Required for Direct Opening Action	40N
Minimum Operator Stroke Required for Direct Opening Action	4.0 mm
Maximum Operator Stroke	4.5 mm
Contact Resistance	50 mΩ maximum (initial value)
Insulation Resistance	100 MΩ minimum (500V DC megger)
Overvoltage Category	II
Impulse Withstand Voltage	2.5 kV
Pollution Degree	3
Operating Frequency	900 operations/hour
Shock Resistance	Operating extremes: 150 m/s^2 Damage limits: 1000 m/s^2
Vibration Resistance	Operating extremes: 10 to 500 Hz, amplitude 0.35mm, acceleration 50 m/s^2 Damage limits: 10 to 500 Hz, amplitude 0.35 mm, acceleration 50 m/s^2
Durability	Mechanical: 250,000 Electrical: 100,000 250,000 (24V AC/DC, 100mA)
Degree of Protection	IP65, IP40 (IEC 60529)
Short-circuit Protection	250V/10A fuse (Type aM IEC 60269-1/IEC 60269-2)
Conditional Short-circuit Current	1000A
Terminal Style	Solder terminal, Solder/tab #110 terminal
Recommended Tightening Torque for Locking Ring	0.88 N·m
Applicable Wire Size	1.25 mm^2 maximum (AWG16 maximum)
Terminal Soldering Condition	310 to 350°C, within 3 seconds
Weight (approx.)	ø29mm mushroom: 14g ø40mm mushroom: 17g

Note: Except for stop switches (operator color: yellow and gray)

XA Series

Pushlock Pull/Turn Reset (Solder Terminal)

Shape	Contact	Part No.		① Operator Color Code
		IP40 (contact part: black)	IP65 (contact part: yellow)	
ø29mm Mushroom	1NC	XA1E-BV3U01K①	XA1E-BV3U01①	R: red RH: bright red
	2NC	XA1E-BV3U02K①	XA1E-BV3U02①	
ø40mm Mushroom	1NC	XA1E-BV4U01K①	XA1E-BV4U01①	
	2NC	XA1E-BV4U02K①	XA1E-BV4U02①	

• Solder/tab #110 terminal is also available. Specify "T" before ① in the Ordering No.
XA1E-BV3U02KR → XA1E-BV3U02KTR

Dimensions

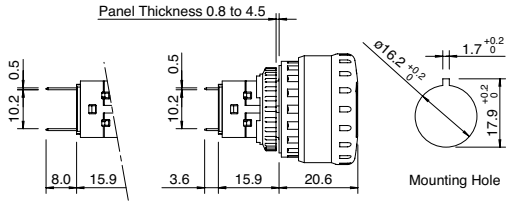

Solder/Tab Terminal #110
(Behind the panel: 23.9)

Solder Terminal
(Behind the panel: 19.5)

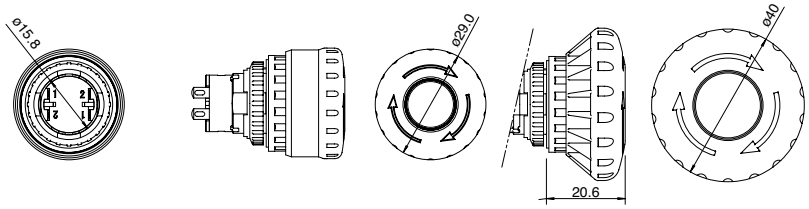

ø29 mm Mushroom

ø40 mm Mushroom

All dimensions in mm.

Terminal Arrangement (Bottom View)

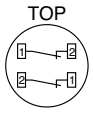

1NC: Termimals on top

Mounting Hole Layout

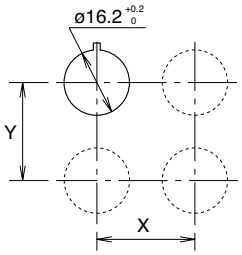

• The values shown on the left are the minimum dimensions for mounting with other ø16 mm pushbuttons. For other control units of different sizes and styles, determine the values according to the dimensions, operation, and wiring.

	X	Y
ø29mm Mushroom	40 mm minimum	
ø40mm Mushroom	50 mm minimum	

ø16 XA Series Emergency Stop Switches (w/Removable Contact Block)

The World's First ø16 mm, 4-contact Emergency Stop Switch. Compact size - only 27.9 mm deep behind the panel. Reliable "Safe break action."

- The depth behind the panel is only 27.9 mm for 1 to 4 contacts, both on illuminated and non-illuminated.
- IDEC's original "Safe break action" ensures that the contacts open when the contact block is detached from the operator.
- 1 to 4NC main contacts and 1NO monitor contact
- Push-to-lock, Pull or Turn-to-reset operator
- Direct opening action mechanism (IEC 60947-5-5, 5.2, IEC60947-5-1, Annex K)
- Safety lock mechanism (IEC 60947-5-5, 6.2)
- Degree of protection IP65 (IEC 60529)
- Two operator sizes: ø29 and ø40 mm
- Dark red (Munsell 5R4/12) or bright red (Munsell 7.5R4.5/14) colors are available for the operator of non-illuminated emergency stop switches, and gray for stop switch operators.
- UL, c-UL recognized. EN compliant

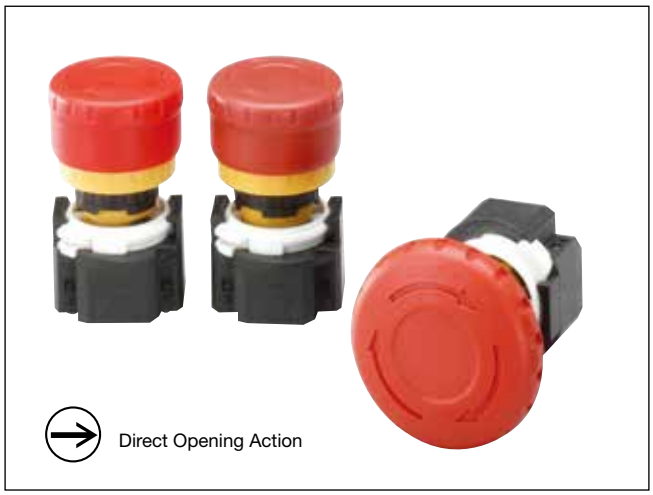

Standards

Applicable Standards	Mark	File No. or Organization
UL508 CSA C22.2 No. 14	c UL us	UL/c-UL Recognized, File No. E68961
IEC60947-5-5 (Note) UL991 (Note) NFPA79 (Note)	—	UL File No. E305148
EN60947-5-1 EN60947-5-5 (Note)	TÜV	TÜV SÜD
	CE	EU Low Voltage Directive
GB14048.5	CCC	CCC No. 2005010305150899 (Stop switch: CCC No. 2005010305150894)

Note: Except for stop switches (button color: gray).

Contact Ratings

NC main contacts (black) /NO monitor contact (blue)

Rated Insulation Voltage (Ui)				300V (illuminated part: 60V)		
Rated Thermal Current (Ith)				5A		
Rated Operating Voltage (Ue)				30V	125V	250V
Rated Operating Current	Main Contacts	AC 50/60 Hz	Resistive Load (AC-12)	–	3A	3A
			Inductive Load (AC-15)	–	1.5A	1.5A
		DC	Resistive Load (DC-12)	2A	0.4A	0.2A
			Inductive Load (DC-13)	1A	0.22A	0.1A
	Monitor Contacts	AC 50/60 Hz	Resistive Load (AC-12)	–	1.2A	0.6A
			Inductive Load (AC-14)	–	0.6A	0.3A
		DC	Resistive Load (DC-12)	2A	0.4A	0.2A
			Inductive Load (DC-13)	1A	0.22A	0.1A

- Minimum applicable load: 5V AC/DC, 1 mA (reference value) (Operating area may vary according to the operating conditions and load types.)
- The rated operating currents are measured at resistive/inductive load types specified in IEC 60947-5-1.

Illumination Ratings

Rated Voltage	Operating Voltage	Rated Current
24V AC/DC	24V AC/DC ±10%	11 mA

Specifications

Applicable Standards	IEC60947-5-1, EN60947-5-1 IEC60947-5-5 (Note), EN60947-5-5 (Note), JIS C8201-5-1, UL991 (Note), NFPA79 (Note), UL508, CSA C22.2 No.14, GB14048.5
Operating Temperature	–25 to +60°C (no freezing) Illuminated: –25 to +55°C (no freezing)
Storage Temperature	–45 to +80°C
Operating Humidity	45 to 85% RH (no condensation)
Operating Force	Push to lock: 10.5N Pull to reset: 10N Turn to reset: 0.16 N·m
Minimum Force Required for Direct Opening Action	60N
Minimum Operator Stroke Required for Direct Opening Action	4.0 mm
Maximum Operator Stroke	4.5 mm
Contact Resistance	50 mΩ maximum (initial value)
Insulation Resistance	100 MΩ minimum (500V DC megger)
Overvoltage Category	II
Impulse Withstand Voltage	2.5 kV
Pollution Degree	3 (inside LED unit: 2)
Operation Frequency	900 operations/hour
Shock Resistance	Operating extremes: 150 m/s² Damage limits: 1000 m/s²
Vibration Resistance	Operating extremes: 10 to 500 Hz, amplitude 0.35 mm acceleration 50 m/s² Damage limits: 10 to 500 Hz, amplitude 0.35 mm acceleration 50 m/s²
Mechanical Life	250,000 operations minimum
Electrical Life	100,000 operations min 250,000 operations min (24V AC/DC, 100 mA)
Degree of Protection	IP65 (IEC60529)
Short-circuit Protection	250V/10A fuse (Type aM, IEC60269-1/IEC60269-2)
Conditional Short-circuit Current	1000A
Terminal Style	Solder terminal, PC board terminal
Recommended Tightening Torque for Locking Ring	0.88 N·m
Connectable Wire	1.25 mm² maximum (AWG16 maximum)
Soldering Conditions	310 to 350°C, 3 seconds maximum
Weight	ø29 mm: 23g, ø40 mm: 28g

Note: Except for stop switches (operator color: gray).

ø16 XA Series Emergency Stop Switches (w/Removable Contact Block)

Non-illuminated

Pushlock Pull/Turn Reset (Solder Terminal/PC Board Terminal)

Shape	NC Main Contact	NO Monitor Contact	Part No.		Operator Color Code
			Solder Terminal	PC Board Terminal	
ø29mm Mushroom	1NC	—	XA1E-BV301①	XA1E-BV301V①	R: Dark red RH: Bright red
	2NC	—	XA1E-BV302①	XA1E-BV302V①	
	3NC	—	XA1E-BV303①	XA1E-BV303V①	
	4NC	—	XA1E-BV304①	XA1E-BV304V①	
	1NC	1NO	XA1E-BV311①	XA1E-BV311V①	
	2NC	1NO	XA1E-BV312①	XA1E-BV312V①	
	3NC	1NO	XA1E-BV313①	XA1E-BV313V①	
ø40mm Mushroom 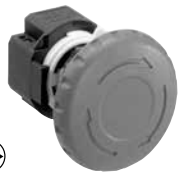	1NC	—	XA1E-BV401①	XA1E-BV401V①	
	2NC	—	XA1E-BV402①	XA1E-BV402V①	
	3NC	—	XA1E-BV403①	XA1E-BV403V①	
	4NC	—	XA1E-BV404①	XA1E-BV404V①	
	1NC	1NO	XA1E-BV411①	XA1E-BV411V①	
	2NC	1NO	XA1E-BV412①	XA1E-BV412V①	
	3NC	1NO	XA1E-BV413①	XA1E-BV413V①	

- Specify a color code in place of ① in the Part No.
- Terminal cover (XA9Z-VL2) is ordered separately.
- For EMO Switches, see page 58.

Illuminated

Pushlock Pull/Turn Reset (Solder Terminal/PC Board Terminal)

Shape	NC Main Contact	NO Monitor Contact	Part No.		Operator Color
			Solder Terminal	PC Board Terminal	
ø29mm Mushroom	1NC	—	XA1E-LV301Q4R	XA1E-LV301Q4VR	Dark red only
	2NC	—	XA1E-LV302Q4R	XA1E-LV302Q4VR	
	3NC	—	XA1E-LV303Q4R	XA1E-LV303Q4VR	
	4NC	—	XA1E-LV304Q4R	XA1E-LV304Q4VR	
	1NC	1NO	XA1E-LV311Q4R	XA1E-LV311Q4VR	
	2NC	1NO	XA1E-LV312Q4R	XA1E-LV312Q4VR	
	3NC	1NO	XA1E-LV313Q4R	XA1E-LV313Q4VR	
ø40mm Mushroom	1NC	—	XA1E-LV401Q4R	XA1E-LV401Q4VR	
	2NC	—	XA1E-LV402Q4R	XA1E-LV402Q4VR	
	3NC	—	XA1E-LV403Q4R	XA1E-LV403Q4VR	
	4NC	—	XA1E-LV404Q4R	XA1E-LV404Q4VR	
	1NC	1NO	XA1E-LV411Q4R	XA1E-LV411Q4VR	
	2NC	1NO	XA1E-LV412Q4R	XA1E-LV412Q4VR	
	3NC	1NO	XA1E-LV413Q4R	XA1E-LV413Q4VR	

- Terminal cover (XA9Z-VL2) is ordered separately.

XA Series Emergency Stop Switches (w/Removable Contact Block) ø16

Dimensions

Non-illuminated

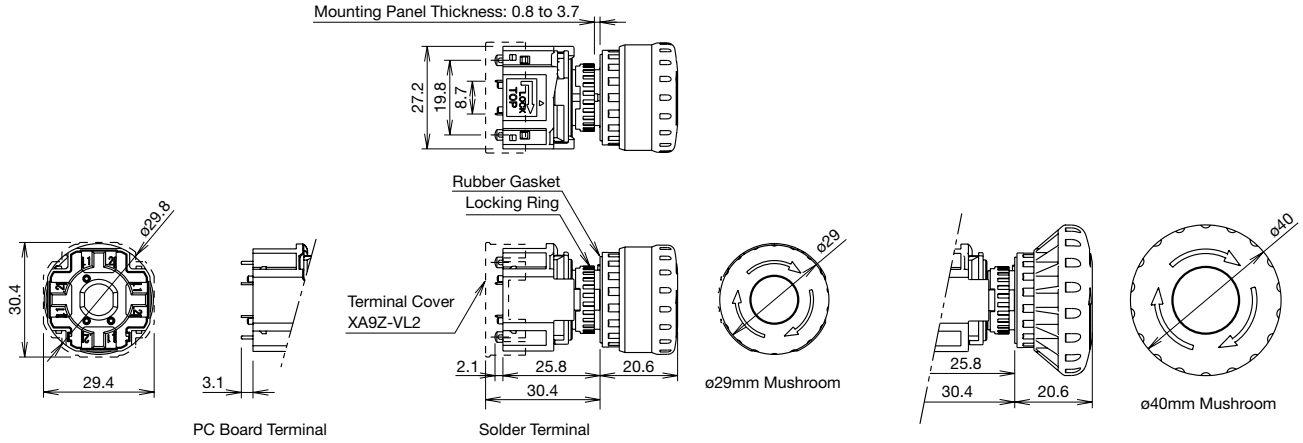

Illuminated

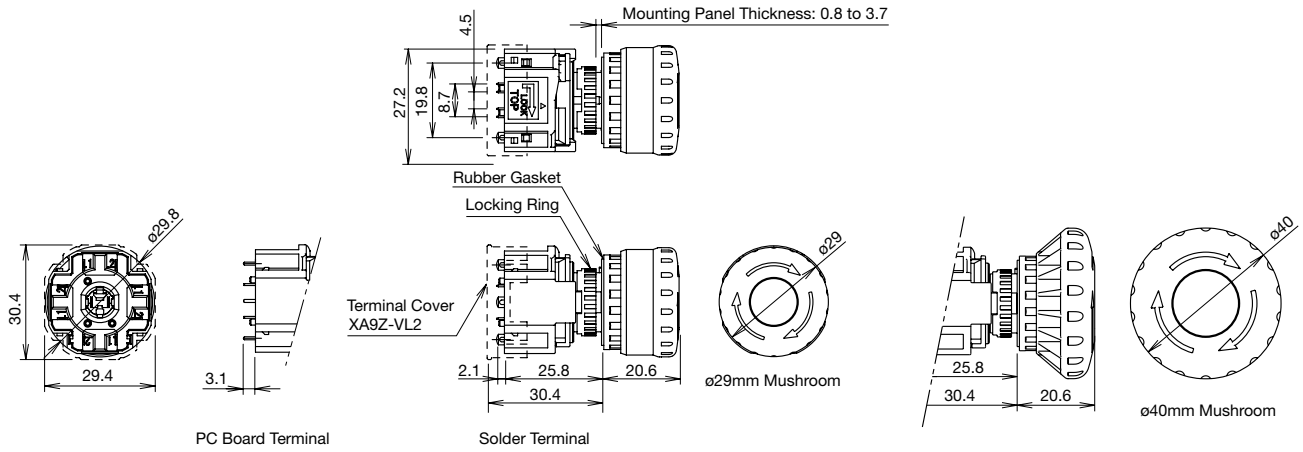

PC Board Layout (Bottom View)

Non-Illuminated

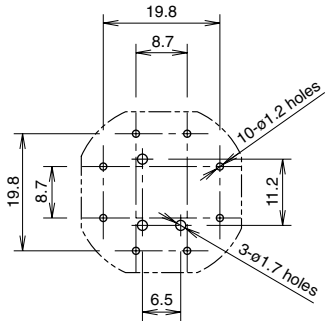

Illuminated

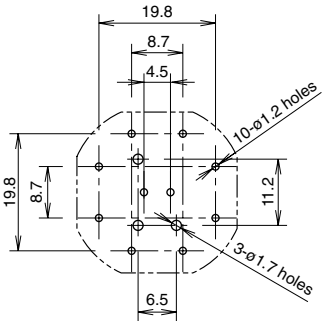

Panel Cut-out

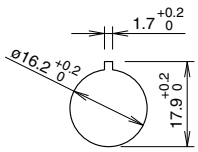

All dimensions in mm.

Mounting Hole Layout

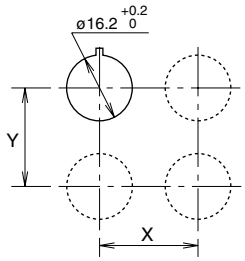

	X	Y
ø29mm Mushroom	40 mm minimum	
ø40mm Mushroom	50 mm minimum	

- The values shown above are the minimum dimensions for mounting with other ø16 mm pushbuttons. For other control units of different sizes and styles, determine the values according to the dimensions, operation, and wiring convenience.

LED Unit Internal Circuit

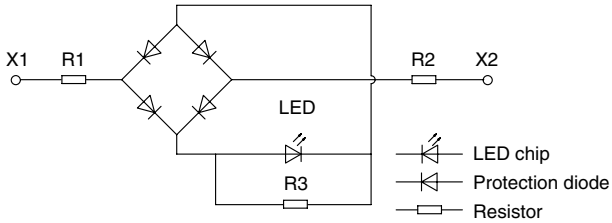

Terminal Arrangement (Bottom View)

Non-illuminated

NC main contacts (black) only
NC main contacts (black):
Terminals 1-2

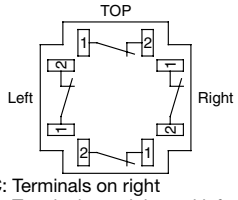

1NC: Terminals on right
2NC: Terminals on right and left
3NC: Terminals on right, left, and top

With NO monitor contacts (blue)
NC main contacts (black):
Terminals 1-2
NO monitor contacts (blue):
Terminals 3-4

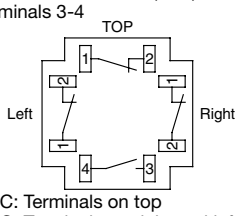

1NC: Terminals on top
2NC: Terminals on right and left

Illuminated

NC main contacts only (black)
NC main contacts(black):
Terminals 1-2

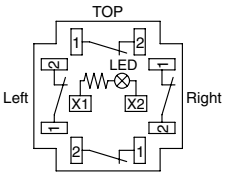

1NC: Terminals on right
2NC: Terminals on right and left
3NC: Terminals on right, left, and top

With NO monitor contacts (blue)
NC main contacts (black):
Terminals 1-2
NO monitor contacts (blue):
Terminals 3-4

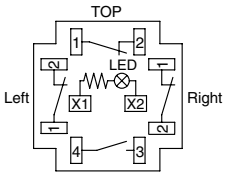

1NC: Terminals on top
2NC: Terminals on right and left

Nameplates (for ø16 Emergency Stop Switches)

Description	Legend	Part No.	Material	Plate Color	Legend Color
For ø29mm Operator	(blank)	**HAAV-0**	Polyamide	Yellow	Black
	EMERGENCY STOP	**HAAV-27**			
For ø40mm Operator	(blank)	**HAAV4-0**			
	EMERGENCY STOP	**HAAV4-27**			

For ø29mm Operator

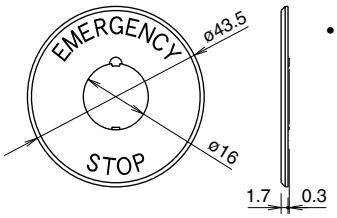

- Panel thickness when using the nameplate: 0.5 to 2 mm

For ø40mm Operator

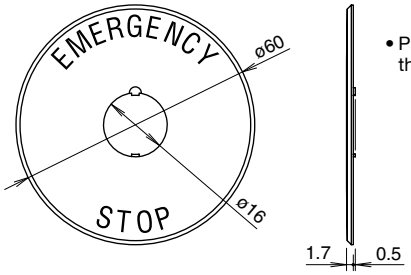

- Panel thickness when using the nameplate: 0.5 to 2 mm

All dimensions in mm.

Accessories and Replacement Parts

Description & Shape	Material	Part No.	Ordering No.	Package Quantity	Remarks
Ring Wrench	Metal (nickel-plated brass)	**MT-001**	**MT-001**	1	• Used to tighten the locking ring when installing the XA emergency stop switch onto a panel.
Locking Ring	Polyamide	**XA9Z-LN**	**XA9Z-LNPN10**	10	• Black
Terminal Cover	PBT	**XA9Z-VL2**	**XA9Z-VL2PN02**	2	• White • Used for solder terminals. • Also applicable to the XW series.
LED Unit	For Solder Terminal	**XA9Z-LED2R**	**XA9Z-LED2R**	1	• Replacement LED unit for illuminated (for XA series only).
	For PC Board Terminal	**XA9Z-LED2VR**	**XA9Z-LED2VR**		
LED Unit Removal Tool	Stainless Steel	**MT-101**	**MT-101**		• Used for removing the LED unit.

XA Series Emergency Stop Switches (w/Removable Contact Block) ø16

⚠ Safety Precautions

- Turn off power to the XA series emergency stop switch before starting installation, removal, wiring, maintenance, and inspection of the relays. Failure to turn power off may cause electrical shock or fire hazard.
- Use the LED unit removal tool when replacing the LED unit to avoid burn on your hands.
- Use wires of the proper size to meet the voltage and current requirements, and solder the wires correctly. If soldering is incomplete, the wire may heat during operation, causing fire hazard.

Instructions

Removing the Contact Block

First unlock the operator button. While pushing up the white bayonet ring, using a small screwdriver (width: 2.5 to 3 mm) if necessary, turn the contact block counterclockwise and pull out. **Do not exert excessive force when using a screwdriver, otherwise the bayonet ring may be damaged.**

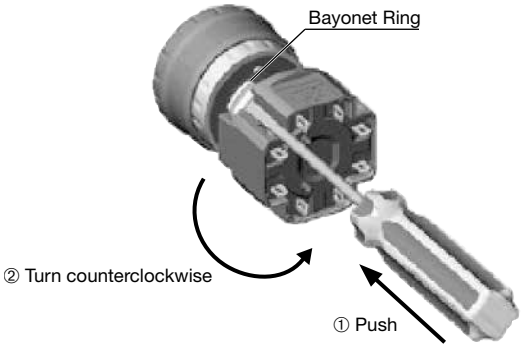

Notes for Removing the Contact Block

1. When the contact block is removed, the monitor contact (NO contact) is closed.
2. While removing the contact block, do not exert excessive force, otherwise the switch may be damaged.

Panel Mounting

Remove the locking ring from the operator and check that the rubber gasket is in place. Insert the operator from panel front into the panel hole. Face the side with the anti-rotation protrusion on the operator upward, and tighten the locking ring.

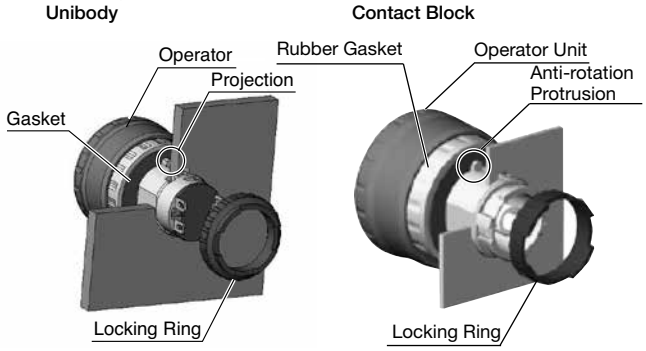

Notes for Panel Mounting

To mount the XA emergency stop switches onto a panel, tighten the locking ring to a tightening torque of 0.88 N·m maximum using ring wrench MT-001. Do not use pliers. Do not exert excessive force, otherwise the locking ring may be damaged.

Installing the Contact Block

First turn the bayonet ring to the unlocked position.

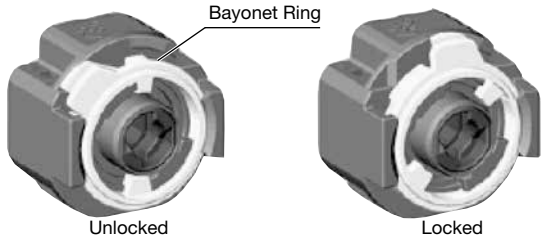

Align the small ▲ marking on the edge of the operator base with the TOP marking on the contact block. Press the contact block onto the operator and turn the contact block clockwise until the bayonet ring clicks.

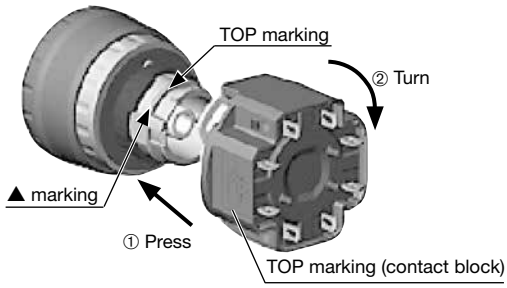

Notes for Installing the Contact Block

Check that the contact block is securely installed on the operator. When the emergency stop switch is properly assembled, the bayonet ring is in place as shown below.

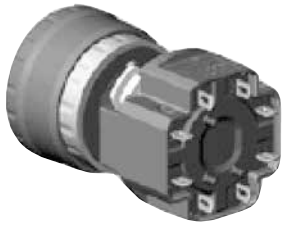

Removing the LED Unit (Contact Block)

Pull out the LED unit while squeezing the latches on the LED unit using the LED unit removal tool (MT-101).

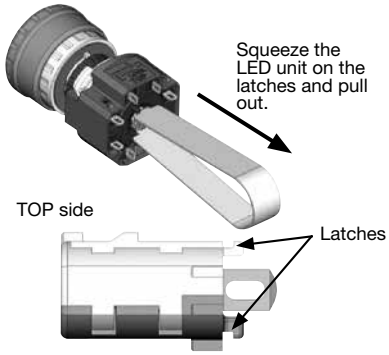

Installing the LED Unit (with Removable Contact Block)

Align the to of the LED unit with the TOP marking on the contact block. Push the LED unit into the contact block.

Wiring

1. The applicable wire size is 1.25 mm^2 maximum.
2. Solder the terminal at a temperature of 310 to 350°C within 3 seconds using a soldering iron. Sn-Ag-Cu type is recommended when using lead-free solder. When soldering, do not touch the enabling switch with the soldering iron. Also ensure that no tensile force is applied to the terminal. Do not bend the terminal or apply excessive force to the terminal.
3. Use a non-corrosive rosin flux.
4. Because the terminal spacing is narrow, use protective tubes or heat shrinkable tubes to avoid burning of wire coating or short circuit.

Solder/Tab Terminal #110

1. Use #110 receptacles for 0.5mm-thick tabs.
2. Because the terminal spacing is narrow, use protective tubes or heat shrinkable tubes of 0.5mm minimum in thickness.
3. Do not apply force on the terminals in the direction other than vertical to the mounting panel, otherwise the terminals will be damaged.

PC Board Terminal

1. When mounting a contact block on a PC board, provide sufficient rotating space for the PC board when installing and removing the contact block.
2. When mounting an XA emergency stop switch on a PC board, make sure that the operator is securely installed.

About PC Board and Circuit Design

1. Use PC boards made of glass epoxy copper-clad laminated sheets of 1.6 mm in thickness, with double-sided through hole.
2. PC boards and circuits must withstand rated voltage and current, including the instantaneous current and voltage at switching.
3. The minimum applicable load is 5V AC/DC, 1 mA. This value may vary according to the operating environment and load.
4. Within the 2.8∗ mm areas shown in the figure below, terminals touch the PC board, resulting in possible short circuit on the printed circuit. When designing a PC board pattern, take this possibility into consideration.

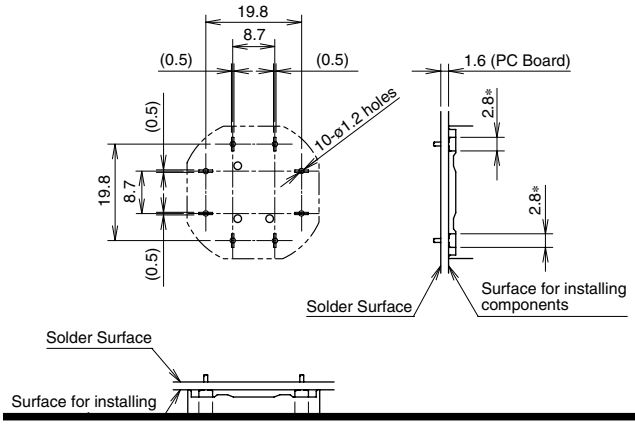

Installing Insulation Terminal Cover

To install the terminal cover (XA9Z-VL2), align the TOP marking on the terminal cover with TOP marking on the contact block, and press the terminal cover toward the contact block.

Note: For wiring, insert the wires into the holes in the terminal cover before soldering.

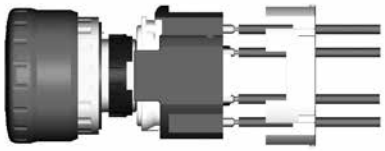

Contact Bounce

When the button is reset by pulling or turning, the NC main contacts will bounce. When pressing the button, the NO monitor contacts will bounce.
When designing a control circuit, take the contact bounce time into consideration (reference value: 20 ms).

Nameplate

When anti-rotation is not required, remove the projection from the nameplate using pliers.

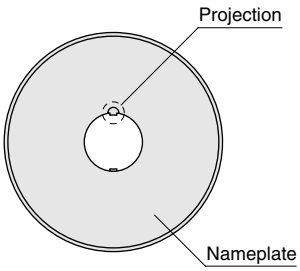

Handling

Do not expose the switch to excessive shock and vibration, otherwise the switch may be deformed or damaged, causing malfunction or operation failure.

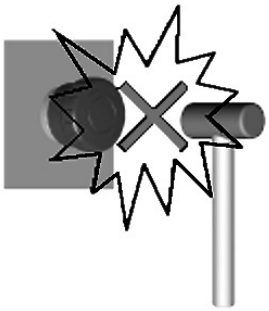

ø22 XW Series Emergency Stop Switches

ø22 mm, 4-contact Emergency Stop Switch. Compact size—only 37.1 mm deep behind the panel (screw terminal style 48.7 mm with terminal cover). Reliable "Safe break action."

- The depth behind the panel is only 37.1 mm for 1 to 4 contacts (screw terminal style 48.7 mm with terminal cover).
- The same depth behind the panel for illuminated and non-illuminated switches.
- IDEC's original "Safe break action" ensures that the contacts open when the contact block is detached from the operator.
- 1 to 4NC main contacts and 1 or 2NO monitor contact
- Push-to-lock, Pull or Turn-to-reset operator
- Direct opening action mechanism (IEC60947-5-5, 5.2, IEC60947-5-1, Annex K)
- Safety lock mechanism (IEC60947-5-5, 6.2)
- Degree of protection IP65 (IEC60529)
- Screw terminal style is finger-safe (IP20).
- Two operator sizes: ø40 and ø60 mm
- Dark red (Munsell 5R4/12) or bright red (Munsell 7.5R4.5/14) colors are available for the non-illuminated operator.
- Push-ON illumination available (operator size: ø60)
- Connector style available to reduce wiring time and wiring mistakes.
- UL c-UL listed. EN compliant

Direct Opening Action

Standards

Applicable Standards	Mark	File No. or Organization
UL508 CSA C22.2 No.14	c UL us	UL/c-UL Recognition File No. E68961 (solder terminal, PC board terminal)
	c UL us LISTED	UL/c-UL Listing File No. E68961 (screw terminal)
UL508	UL	UL Recognition File No. E68961 (connector style)
IEC60947-5-5 (Note) UL991 NFPA79	—	UL File No. E305148 (solder terminal, PC board terminal)
	UL LISTED EMERGENCY STOP DEVICE	UL Listing File No. E305148 (screw terminal)
EN60947-5-1 EN60947-5-5 (Note)	TÜV	TÜV SÜD
	CE	EU low voltage directive
GB14048.5	CCC	CCC No. 2005010305150897 (except connector style)

Note: Except for stop switch (yellow button)

Contact Ratings
(NC main contacts/NO monitor contact)

Rated Insulation Voltage (Ui)			Screw Terminal	250V		
			Solder Terminal	300V		
			PC Board Terminal			
			Connector	125V		
Rated Thermal Current (Ith)				5A (connector style: 2.5A)		
Rated Operating Voltage (Ue)				30V	125V	250V (Note 3)
Rated Operating Current	Main Contacts	AC 50/60 Hz	Resistive Load (AC-12)	–	5A (Note 1)	3A
			Inductive Load (AC-15)	–	3A (Note 2)	1.5A
		DC	Resistive Load (DC-12)	2A	0.4A	0.2A
			Inductive Load (DC-13)	1A	0.22A	0.1A
	Monitor Contacts	AC 50/60 Hz	Resistive Load (AC-12)	–	1.2A	0.6A
			Inductive Load (AC-14)	–	0.6A	0.3A
		DC	Resistive Load (DC-12)	2A	0.4A	0.2A
			Inductive Load (DC-13)	1A	0.22A	0.1A

- Minimum applicable load: 5V AC/DC, 1 mA (reference value) (Operating area depends on the operating conditions and load types.)
- The rated operating currents are measured at resistive/inductive load types specified in JIS C8201-5-1.

Note 1: Solder terminal/PC board terminal: 3A, Connector: 2.5A
Note 2: Solder terminal/PC board terminal: 1.5A
Note 3: Except for connector style.

Illumination Ratings

Rated Voltage	Operating Voltage	Rated Current
24V AC/DC	24V AC/DC ±10%	15 mA

Note: An LED lamp is built into the contact block and cannot be replaced.

Specifications

Applicable Standards	IEC60947-5-1, EN60947-5-1 IEC60947-5-5 (Note), EN60947-5-5 JIS C8201-5-1, UL508, UL991, NFPA79, CSA C22.2 No. 14, GB14048.5
Operating Temperature	Non-illuminated: –25 to +60°C (no freezing) LED illuminated: –25 to +55°C (no freezing)
Storage Temperature	–45 to +80°C
Operating Humidity	45 to 85% RH (no condensation)
Operating Force	Push to lock: 32N Pull to reset: 21N Turn to reset: 0.27 N·m
Minimum Force Required for Direct Opening Action	80N
Minimum Operator Stroke Required for Direct Opening Action	4.0 mm
Maximum Operator Stroke	4.5 mm
Contact Resistance	50 mΩ maximum (initial value) Connector style: 30 mΩ (Note)
Insulation Resistance	100 MΩ minimum (500V DC megger)
Overvoltage Category	II
Impulse Withstand Voltage	2.5 kV
Pollution Degree	3 (connector style: 2)
Operation Frequency	900 operations/hour
Shock Resistance	Operating extremes: 150 m/s² Damage limits: 1000 m/s²
Vibration Resistance	Operating extremes: 10 to 500 Hz, amplitude 0.35 mm, acceleration 50 m/s² Damage limits: 10 to 500 Hz, amplitude 0.35 mm, acceleration 50 m/s²
Mechanical Life	250,000 operations minimum
Electrical Life	100,000 operations minimum 250,000 operations minimum (24V AC/DC, 100 mA)
Degree of Protection	Panel front: IP65 (IEC 60529) Terminal Protection: IP20 (screw terminal, when using XW9Z-VL2MF)
Short-circuit Protection	250V/10A fuse (Type aM, IEC60269-1/IEC60269-2)
Conditional Short-circuit Current	1000A
Terminal Style	Solder terminal, PC board terminal, M3 screw terminal, Connector
Recommended Tightening Torque for Locking Ring	2.0 N·m
Connectable Wire	Screw terminal: 0.75 to 1.25 mm² (AWG18 to 16) Solder terminal / PC board terminal: 1.25 mm² maximum (AWG16 maximum) Connector style: 0.3 to 0.85 mm² (AWG22 to 18)
Soldering Conditions	310 to 350°C, 3 seconds maximum
Recommended Tightening Torque for Terminal Screw	0.6 to 1.0 N·m
Weight	ø40 mm: 72g ø60 mm: 81g

Note: When connecting the applicable connector to a 1m wire of 0.33 mm² (AWG22).

Non-illuminated Pushlock Pull / Turn Reset (Screw Terminal)

Shape	NC Main Contact	NO Monitor Contact	Part No.		①Operator Color Code
			IP20	w/Terminal Cover	
ø40mm Mushroom 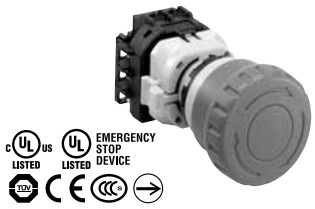	1NC	—	XW1E-BV401MF①	XW1E-BV401M①	R: Dark red RH: Bright red
	2NC	—	XW1E-BV402MF①	XW1E-BV402M①	
	3NC	—	XW1E-BV403MF①	XW1E-BV403M①	
	4NC	—	XW1E-BV404MF①	XW1E-BV404M①	
	1NC	1NO	XW1E-BV411MF①	XW1E-BV411M①	
	2NC	1NO	XW1E-BV412MF①	XW1E-BV412M①	
	3NC	1NO	XW1E-BV413MF①	XW1E-BV413M①	
	2NC	2NO	XW1E-BV422MF①	XW1E-BV422M①	
ø60mm Mushroom	1NC	—	XW1E-BV501MF①	XW1E-BV501M①	
	2NC	—	XW1E-BV502MF①	XW1E-BV502M①	
	3NC	—	XW1E-BV503MF①	XW1E-BV503M①	
	4NC	—	XW1E-BV504MF①	XW1E-BV504M①	
	1NC	1NO	XW1E-BV511MF①	XW1E-BV511M①	
	2NC	1NO	XW1E-BV512MF①	XW1E-BV512M①	
	3NC	1NO	XW1E-BV513MF①	XW1E-BV513M①	
	2NC	2NO	XW1E-BV522MF①	XW1E-BV522M①	

- Specify a color code in place of ① in the Part No.
- IP20 types can be connected to solid wires only.
- For EMO Switches, see page 58.

Non-illuminated Pushlock Pull/Turn Reset (Solder Terminal/PC Board Terminal)

Shape	NC Main Contact	NO Monitor Contact	Part No.		①Operator Color Code
			Solder Terminal	PC Board Terminal	
ø40mm Mushroom 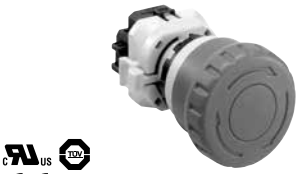	1NC	—	XW1E-BV401①	XW1E-BV401V①	R: Dark red RH: Bright red
	2NC	—	XW1E-BV402①	XW1E-BV402V①	
	3NC	—	XW1E-BV403①	XW1E-BV403V①	
	4NC	—	XW1E-BV404①	XW1E-BV404V①	
	1NC	1NO	XW1E-BV411①	XW1E-BV411V①	
	2NC	1NO	XW1E-BV412①	XW1E-BV412V①	
	3NC	1NO	XW1E-BV413①	XW1E-BV413V①	
	2NC	2NO	XW1E-BV422①	—	

- Specify a color code in place of ① in the Part No.
- Terminal cover (XA9Z-VL2) is ordered separately.

Pushlock Pull/Turn Reset (Connector)

Shape	NC Main Contact	NO Monitor Contact	Part No.	①Operator Color Code
ø40mm Mushroom	3NC	—	XW1E-BV403V①-BC	R: Dark red RH: Bright red

- Specify a color code in place of ① in the Part No.
- Applying for UL/c-UL listing. The switch unit (XW1E-BV) is UL/c-UL listed.
- See page 30 for applicable connectors.

XW Series Emergency Stop Switches ø22

LED Illuminated Pushlock Pull/Turn Reset (Screw Terminal)

Shape	Illumination	Rated Voltage	NC Main Contact	NO Monitor Contact	Part No.	
					IP20	w/Terminal Cover
ø40mm Mushroom 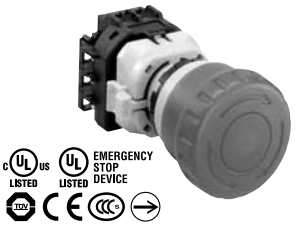	LED	24V AC/DC	1NC	—	XW1E-LV401Q4MFR	XW1E-LV401Q4MR
			2NC	—	XW1E-LV402Q4MFR	XW1E-LV402Q4MR
			3NC	—	XW1E-LV403Q4MFR	XW1E-LV403Q4MR
			4NC	—	XW1E-LV404Q4MFR	XW1E-LV404Q4MR
			1NC	1NO	XW1E-LV411Q4MFR	XW1E-LV411Q4MR
			2NC	1NO	XW1E-LV412Q4MFR	XW1E-LV412Q4MR
			3NC	1NO	XW1E-LV413Q4MFR	XW1E-LV413Q4MR
			2NC	2NO	XW1E-LV422Q4MFR	XW1E-LV422Q4MR

- The operator color is red only.
- IP20 types can be connected to solid wires only.

LED Illuminated Pushlock Pull/Turn Reset (Solder Terminal/PC Board Terminal)

Shape	Illumination	Rated Voltage	NC Main Contact	NO Monitor Contact	Part No.	
					Solder Terminal	PC Board Terminal
ø40mm Mushroom	LED	24V AC/DC	1NC	—	XW1E-LV401Q4R	XW1E-LV401Q4VR
			2NC	—	XW1E-LV402Q4R	XW1E-LV402Q4VR
			3NC	—	XW1E-LV403Q4R	XW1E-LV403Q4VR
			4NC	—	XW1E-LV404Q4R	XW1E-LV404Q4VR
			1NC	1NO	XW1E-LV411Q4R	XW1E-LV411Q4VR
			2NC	1NO	XW1E-LV412Q4R	XW1E-LV412Q4VR
			3NC	1NO	XW1E-LV413Q4R	XW1E-LV413Q4VR
			2NC	2NO	XW1E-LV422Q4R	—

- The operator color is red only.
- Terminal cover (XA9Z-VL2) is ordered separately.

Push-ON LED Illuminated Pushlock Pull/Turn Reset (Screw Terminal)

Shape	Illumination	Rated Voltage	NC Main Contact	NO Monitor Contact	Part No.	
					IP20	w/Terminal Cover
ø40mm Mushroom	LED	24V AC/DC	3NC	—	XW1E-TV403Q4MFR	XW1E-TV403Q4MR
			2NC	1NO	XW1E-TV412Q4MFR	XW1E-TV412Q4MR

- The operator color is red only.
- Push-ON is illuminated when the operator is latched, and turns off when reset.
- IP20 types can be connected to solid wires only.

Push-ON LED Illuminated Pushlock Pull/Turn Reset (Connector)

Shape	Illumination	Rated Voltage	NC Main Contact	NO Monitor Contact	Part No.
ø40mm Mushroom	LED	24V AC/DC	3NC	—	XW1E-TV403Q4VR-BC

- The operator color is red only.
- Push-ON is illuminated when the operator is latched, and turns off when reset.

See page 30 for applicable connectors.

Dimensions (Non-Illuminated)

Screw Terminal (IP20)

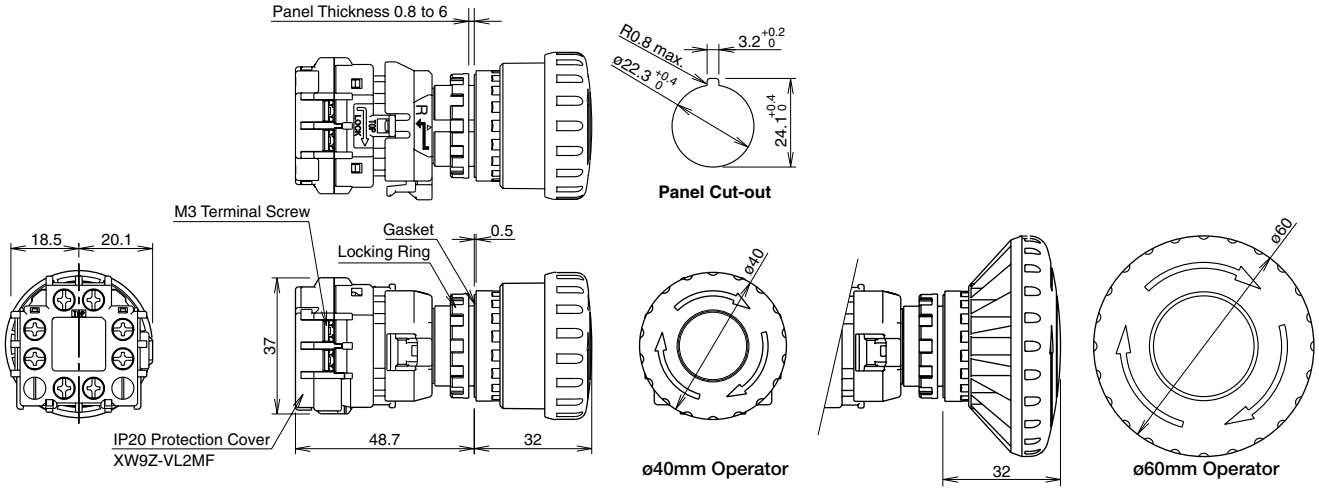

Screw Terminal (w/terminal cover)

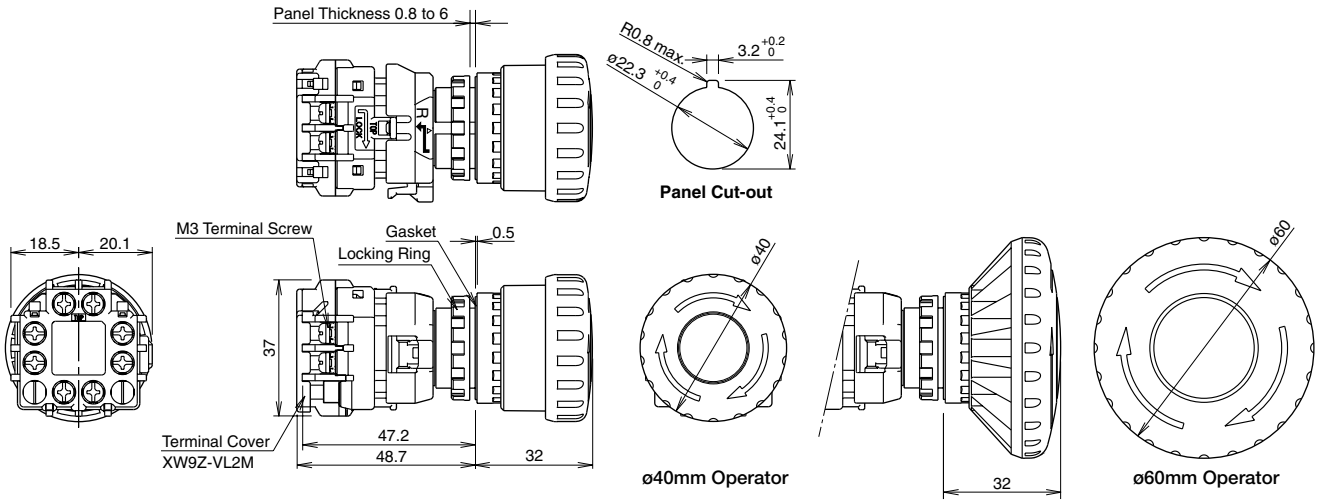

Solder Terminal and PC Board Terminal

ø40mm Operator

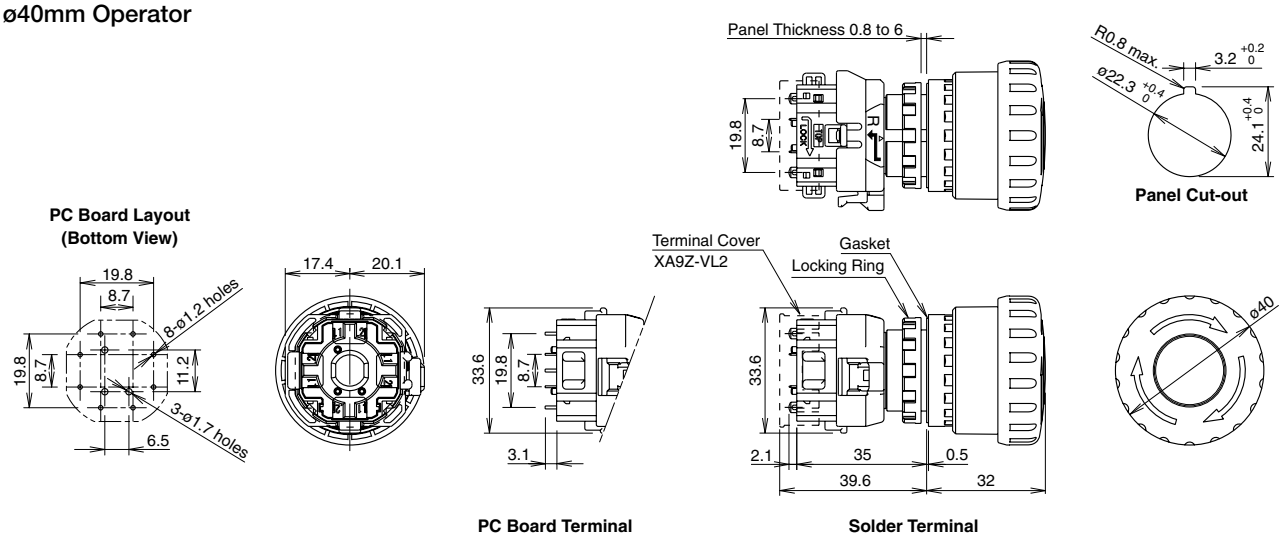

All dimensions in mm.

Dimensions (Illuminated)

Screw Terminal (IP20) LED Illuminated
ø40mm Operator

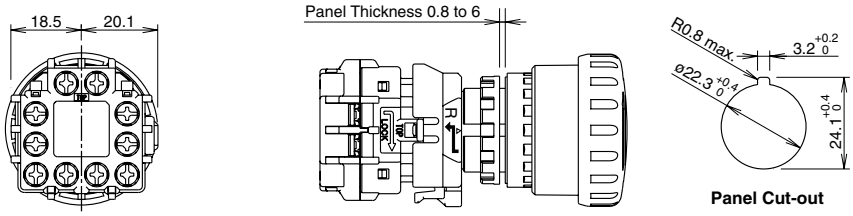

LED Push-ON

Panel Cut-out

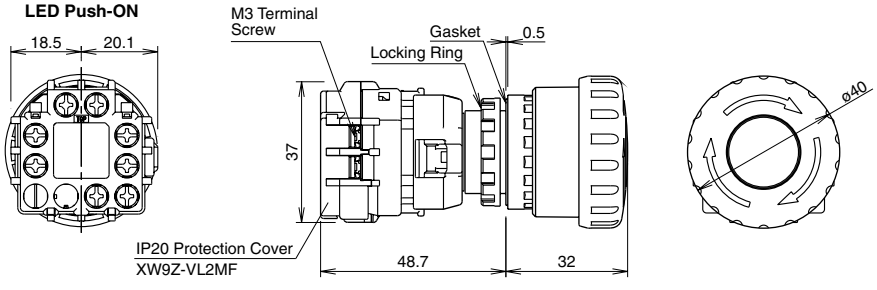

Screw Terminal (w/terminal cover) LED Illuminated
ø40mm Operator

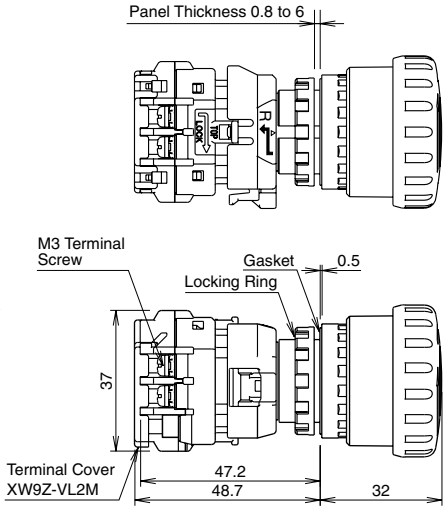

Solder Terminal and PC Board Terminal LED Illuminated
ø40mm Operator

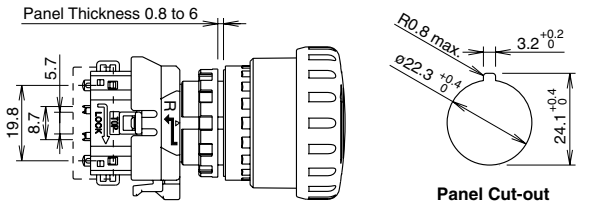

Panel Cut-out

PC Board Layout
(Bottom View)

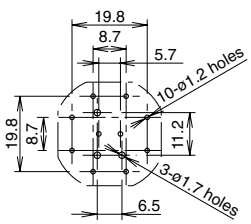

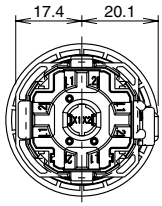

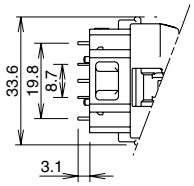

PC Board Terminal

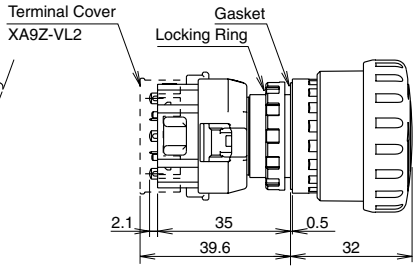

Solder Terminal

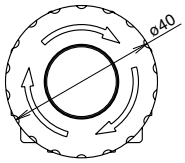

Dimensions (Connector Style)

Non-illuminated / LED Push-ON
ø40mm Operator

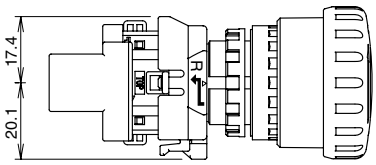

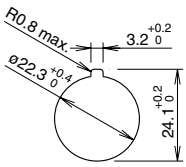

Panel Cut-out

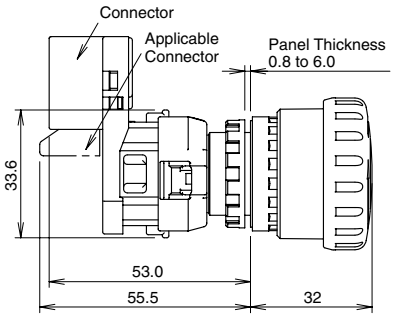

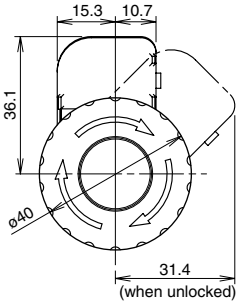

For applicable connectors, see page 30.

All dimensions in mm.

Mounting Hole Layout

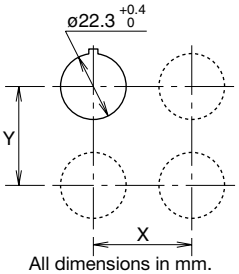

All dimensions in mm.

	X	Y
Screw Terminal	70 mm minimum	
Solder/PC Board Terminal	50 mm minimum	
Connector Style	50 mm minimum	70 mm minimum

- The values shown above are the minimum dimensions for mounting with other ø22mm pushbuttons. For other control units of different sizes and styles, determine the values according to the dimensions, operation, and wiring convenience.

LED Internal Circuit

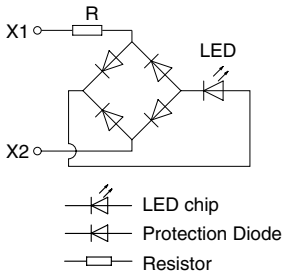

Terminal Arrangement (Bottom View)

Screw Terminal Non-illuminated

NC main contacts only
NC main contacts
Terminals 1-2

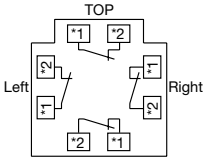

1NC: Terminals on right
2NC: Terminals on right and left
3NC: Terminals on right, left, and top

With 1NO monitor contacts
NC main contacts:
Terminals 1-2
NO monitor contacts:
Terminals 3-4

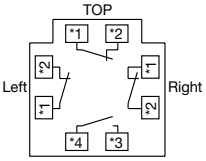

1NC: Terminals on top
2NC: Terminals on right and left

With 2NO monitor contacts
NC main contacts:
Terminals 1-2
NO monitor contacts:
Terminals 3-4

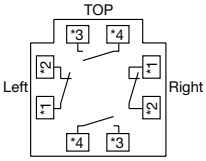

Screw Terminal Illuminated

NC main contacts only
NC main contacts:
Terminals 1-2

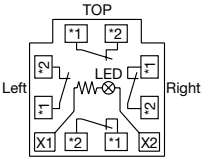

1NC: Terminals on right
2NC: Terminals on right and left
3NC: Terminals on right, left, and top

With 1NO monitor contacts
NC main contacts
Terminals 1-2
NO monitor contacts:
Terminals 3-4

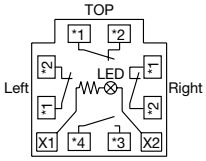

1NC: Terminals on top
2NC: Terminals on right and left

With 2NO monitor contacts
NC main contacts:
Terminals 1-2
NO monitor contacts:
Terminals 3-4

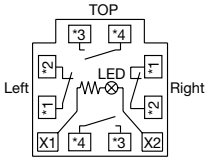

Screw Terminal Illuminated Push-ON

NC main contacts only
NC main contacts:
Terminals 1-2

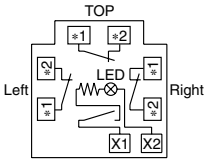

With 1NO monitor contacts
NC main contacts:
Terminals 1-2
NO monitor contacts:
Terminals 3-4

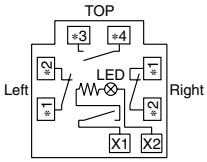

Terminal Marking Development

- Contact
  1-2: NC main contact
  3-4: NO monitor contact
- Contact Number (1-4)
  Starting with the contact of TOP side, in a counterclockwise direction.

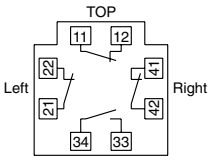

(Example: 1NO-3NC contact)

- On solder terminal and PC board terminal, the contact block is marked with contact codes (NC main contact 1-2: black, NO monitor contact 3-4: blue).

Solder Terminal / PC Board Terminal Non-illuminated

NC main contacts only
NC main contacts:
Terminals 1-2

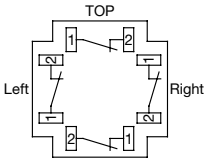

1NC: Terminals on right
2NC: Terminals on right and left
3NC: Terminals on right, left, and top

With 1NO monitor contacts
NC main contacts:
Terminals 1-2
NO monitor contacts:
Terminals 3-4

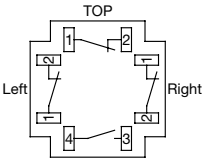

1NC: Terminals on top
2NC: Terminals on right and left

With 2NO monitor contacts
NC main contacts:
Terminals 1-2
NO monitor contacts:
Terminals 3-4

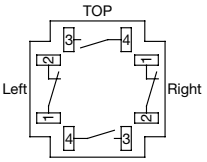

Solder Terminal only

Solder Terminal / PC Board Terminal Illuminated

NC main contacts only
NC main contacts:
Terminals 1-2

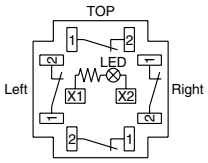

1NC: Terminals on right
2NC: Terminals on right and left
3NC: Terminals on right, left, and top

With 1NO monitor contacts
NC main contacts:
Terminals 1-2
NO monitor contacts:
Terminals 3-4

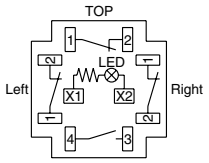

1NC: Terminals on top
2NC: Terminals on right and left

With 2NO monitor contacts
NC main contacts:
Terminals 1-2
NO monitor contacts:
Terminals 3-4

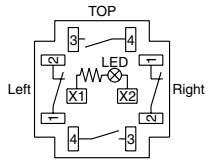

Solder Terminal only

Connector Style Non-illuminated

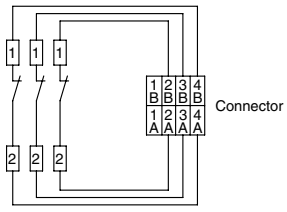

Connector Style Push-ON

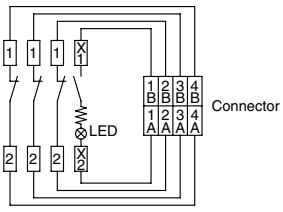

Accessories

Description & Shape	Material	Part No.	Ordering No.	Package Quantity	Remarks
Ring Wrench 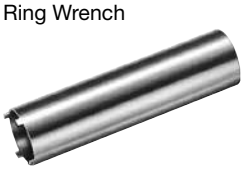	Metal (nickel-plated brass) (weight: approx. 150g)	**MW9Z-T1**	**MW9Z-T1**	1	• Used to tighten the locking ring when installing the XW emergency stop switch onto a panel. 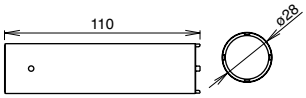
Anti-rotation Ring	Ring: Polyamide Gasket: Nitryl rubber	**HW9Z-RL**	**HW9Z-RLPN10**	10	• The anti-rotation ring is used for preventing the operator from turning. 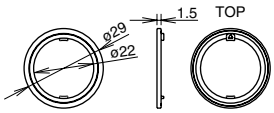
Terminal Cover	PBT	**XA9Z-VL2**	**XA9Z-VL2PN02**	2	• White • Used for solder terminals.
Terminal Cover	PPE	**XW9Z-VL2M**	**XW9Z-VL2MPN02**	2	• Black • Used for screw terminals. • Attached to IP20 protection cover units.
IP20 Protection Cover	Polyamide	**XW9Z-VL2MF**	**XW9Z-VL2MFPN02**	2	• Black • Used on terminals for IP20 finger protection. • Only solid wires can be used. • The IP20 protection cover cannot be removed once installed.
Ring Adapter	Rubber on metal base	**XW9Z-A30E**	**XW9Z-A30EPN02**	2	• Yellow panel surface • Used for installing XW1E emergency stop switches in ø30mm mounting hole. • Can be used for XW1E emergency stop switches only. • IP65 protection. • Cannot be used with nameplates. Panel thickness when mounted: 0.8 to 3.0 mm 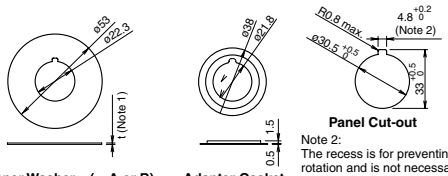 **Adaper Washer** ∗ **(∗: A or B)** **Adapter Gasket** **Panel Cut-out** Note 2: The recess is for preventing rotation and is not necessary for this product. Note 1: Adapter washer thickness (t) A = 1.2 mm B = 0.8 mm • Panel Mounting 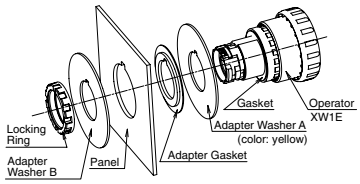

Notes:
- XW emergency stop switches of screw terminal are provided with a terminal cover.
- All dimensions in mm.

Nameplate (for ø22 Emergency Stop Switches)

Description	Legend	Part No.	Ordering No.	Package Quantity	Material	Plate Color	Legend Color
For ø40mm Operator	(blank)	**HWAV-0-Y**	**HWAV-0-Y**	1	Polyamide	Yellow	Black
	EMERGENCY STOP	**HWAV-27-Y**	**HWAV-27-Y**				
For ø60mm Operator	(blank)	**HWAV5-0**	**HWAV5-0**		PBT		
	EMERGENCY STOP	**HWAV5-27**	**HWAV5-27**				
	EMERGENCY STOP	**HWAV5F-27**	**HWAV5F-27PN10**	10	PET film sticker		

• EMERGENCY OFF and white nameplates (blank) also available. See page 61 and 64 for details.

For ø40mm Operator

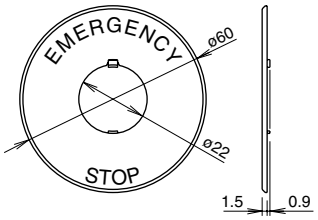

• Panel thickness when using the nameplate: 0.8 to 4.5 mm

For ø60mm Operator

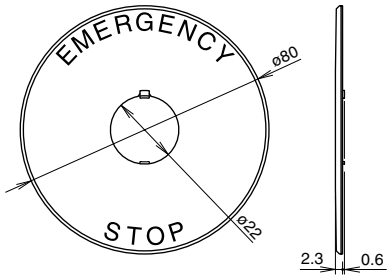

• Panel thickness when using the nameplate: 0.8 to 4 mm

Sticker Nameplate for ø60mm Operator

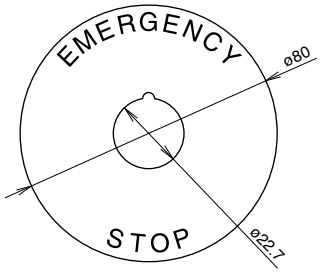

Maintenance Parts

Description & Shape	Material	Part No.	Ordering No.	Package Quantity	Remarks
Locking Ring	Polyamide	**HW9Z-LN**	**HW9Z-LNPN05**	5	• Black
Washer	Nitryl rubber	**HW9Z-WM**	**HW9Z-WMPN10**	10	• Black

⚠ Safety Precautions

- Turn off power to the XW series emergency stop switch before starting installation, removal, wiring, maintenance, and inspection of the relays. Failure to turn power off may cause electrical shock or fire hazard.
- Use wires of the proper size to meet the voltage and current requirements, and solder the wires correctly. If soldering is incomplete, the wire may heat during operation, causing fire hazard.

Instructions

Removing the Contact Block

First unlock the operator button. Grab the bayonet ring ① and pull back the bayonet ring until the latch pin clicks ②, then turn the contact block counterclockwise and pull out ③

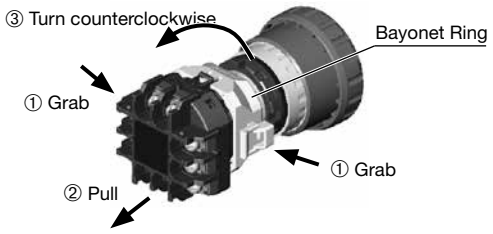

Notes for removing the contact block

1. When the contact block is removed, the monitor contact (NO contact) is closed.
2. While removing the contact block, do not exert excessive force, otherwise the switch may be damaged.
3. An LED lamp is built into the contact block for illuminated pushbuttons. When removing the contact block, pull the contact block straight to prevent damage to the LED lamp. If excessive force is exerted, the LED lamp may be damaged and fail to light.

Panel Mounting

Remove the locking ring from the operator and check that the rubber gasket is in place. Insert the operator from panel front into the panel hole. Face the side without thread on the operator with TOP marking upward, and tighten the locking
ring using ring wrench MW9Z-T1 to a torque of 2.0 N·m maximum.

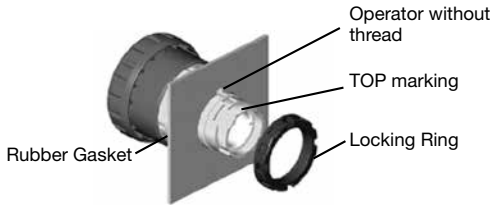

Notes for Panel Mounting

To prevent the XW emergency stop switch from rotating when resetting from the latched position, use of an anti-rotation ring (HW9Z-RL) or a nameplate is recommended.

Installing the Contact Block

First unlock the operator button. Align the small ▼ marking on the edge of the operator with the small ▲ marking on the yellow bayonet ring. Hold the contact block, not the bayonet ring. Press the contact block onto the operator anc turn the contact block clockwise until the bayonet ring clicks.

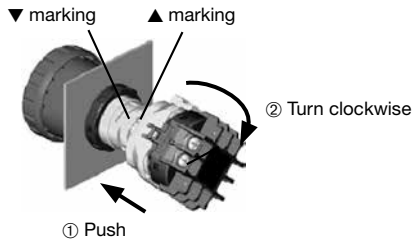

Notes for installing the contact block

Make sure that the bayonet ring is in the locked position. Check that the two projections on the bayonet ring are securely in place.

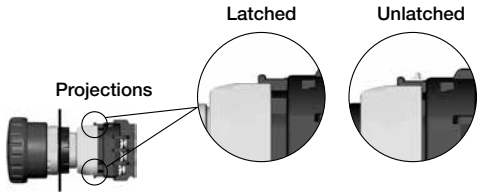

Wiring

Solder Terminal

1. The applicable wire size is 1.25 mm^2 maximum.
2. Solder the terminal at a temperature of 310 to 350°C within 3 seconds using a soldering iron. Sn-Ag-Cu type is recommended when using lead-free solder. When soldering, do not touch the enabling switch with the soldering iron. Also ensure that no tensile force is applied to the terminal. Do not bend the terminal or apply excessive force to the terminal.
3. Use a non-corrosive rosin flux.
4. Because the terminal spacing is narrow, use protective tubes or heat shrinkable tubes to avoid burning of wire coating or short circuit.

PC Board Terminal

1. When mounting a contact block on a PC board, provide sufficient rotating space for the PC board when installing and removing the contact block.
2. When mounting an XW emergency stop switch on a PC board, make sure that the operator is securely installed.
3. Do not solder by flow soldering. Otherwise, damage may be caused.

Instructions

About PC Board and Circuit Design

1. Use PC boards made of glass epoxy copper-clad laminated sheets of 1.6 mm in thickness, with double-sided through hole.
2. PC boards and circuits must withstand rated voltage and current, including the instantaneous current and voltage at switching.
3. The minimum applicable load is 5V AC/DC, 1 mA. This value may vary according to the operating environment and load.
4. Within the 2.8∗ mm areas shown in the figure below, terminals touch the PC board, resulting in possible short circuit on the printed circuit. When designing a PC board pattern, take this possibility into consideration.

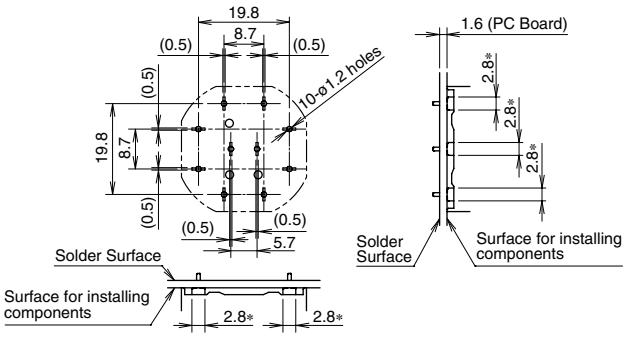

Screw Terminal

Applicable Crimping Terminals | **Solid Wire**

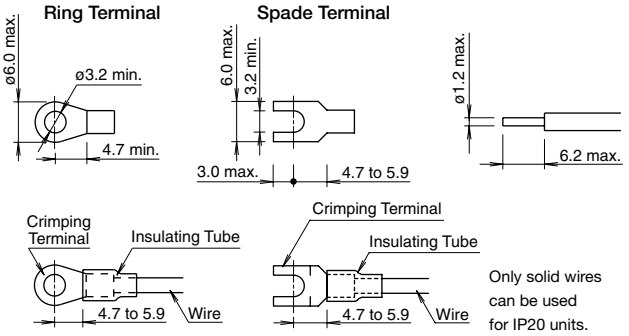

1. Wire thickness: 0.75 to 1.25 mm^2 (AWG18 to 16)

• Be sure to install an insulating tube on the crimping terminal.

2. Tighten the M3 terminal screw to a tightening torque of 0.6 to 1.0 N·m.

Connector

1. Connector shape
   • Tyco Electronics, D-2000 series
   Part No. 1376009-1 (tab header, board mount)
2. Applicable connectors (to be supplied by user)
   • Tyco Electronics, D-2000 series
   Part No. 1-1318119-4 (receptacle housing)
   • Tyco Electronics, D-2000 series
   Part No. 1318107-1 (receptacle contact)
3. To prepare correct receptacles for the connector, read the instruction sheet and catalog of Tyco Electronics and understand the installation and wiring method.
4. Fasten the cable so that the connector is not pulled. Otherwise the switch may be deformed and damaged, causing malfunction or operation failure.

Installing & Removing Terminal Covers

XA9Z-VL2

To install the terminal cover, align the TOP marking on the terminal cover with TOP marking on the contact block, and press the terminal cover toward the contact block.

Note: For wiring, insert the wires into the holes in the terminal cover before soldering.

XW9Z-VL2M

To install the terminal cover, align the TOP marking on the terminal cover with the TOP marking on the contact block. Place the two projections on the bottom side of the contact block into the slots in the terminal cover. Press the terminal cover toward the contact block.

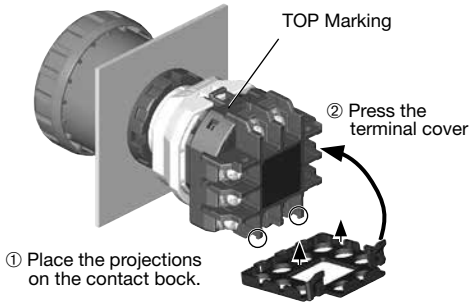

To remove the terminal cover, pull out the two latches on the top side of the terminal cover. Do not exert excessive force to the latches, otherwise the latches may break.

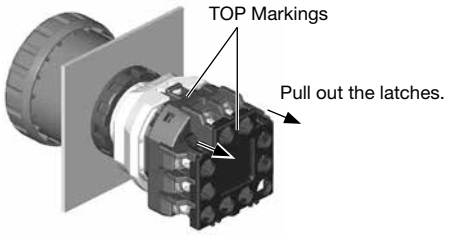

IP20 Protection Terminal Cover XW9Z-VL2MF

To install the IP20 protection cover, align the TOP marking on the cover with the TOP marking on the contact block, and press the cover toward the contact block.

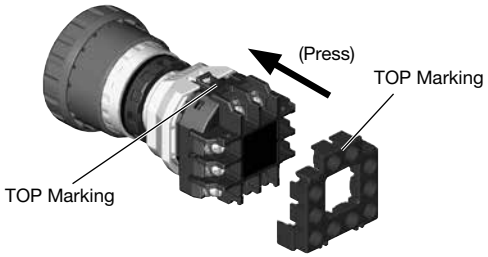

Notes:
1. Once installed, the XW9Z-VL2MF cannot be removed.
2. The XW9Z-VL2MF cannot be installed after wiring.
3. With the XW9Z-VL2MF installed, crimping terminals cannot be used. Use solid wires.
4. Make sure that the XW9Z-VL2MF is securely installed. IP20 cannot be achieved when installed loosely, and electric shocks may occur.

Instructions

Contact Bounce

When the button is reset by pulling or turning, the NC main contacts will bounce. When pressing the button, the NO monitor contacts will bounce.
When designing a control circuit, take the contact bounce time into consideration (reference value: 20 ms).

LED Illuminated Switches

An LED lamp is built into the contact block and cannot be replaced.

Installing the Anti-rotation Ring HW9Z-RL

Align the side without thread on the operator with TOP marking, the small ▲ marking on the anti-rotation ring, and the recess on the mounting panel.

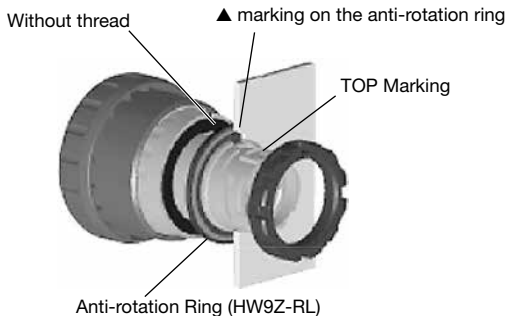

Installing the Nameplate

Align the side without thread on the operator with TOP marking, the projection on the nameplate, and the recess on the mounting panel.

Nameplate or Switch Guard

When anti-rotation is not required, remove the projection from the nameplate or switch guard using pliers.

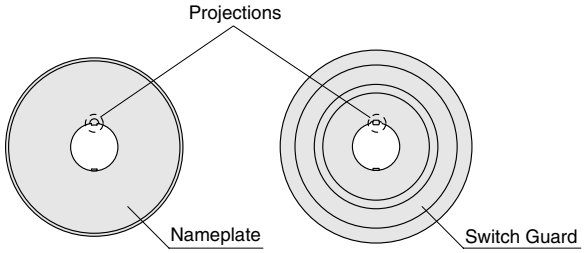

Handling

Do not expose the switch to excessive shocks and vibrations, otherwise the switch may be deformed or damaged, causing malfunction or operation failure.

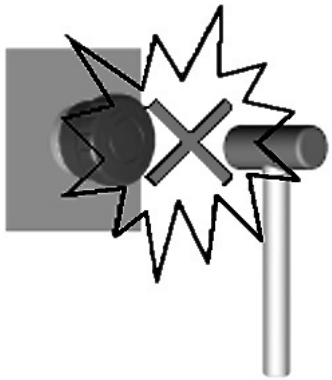

Emergency Stop Switches (Unibody) Specifications

Standards

Applicable Standards	Mark	File No. or Organization
UL508 CSA C22.2 No. 14		UL/c-UL Listing File No. E55996
EN60947-5-5		TÜV SÜD
		EU Low Voltage Directive
GB14048.5		CCC No.2004010305132908

Specifications

Operating Temperature	–25 to +60°C (no freezing) Illuminated units: –25 to +55°C
Storage Temperature	–40 to +80°C (no freezing)
Operating Humidity	45 to 85% RH (no condensation)
Operating Force	50N
Minimum Force Required for Direct Opening Action	5.5 mm
Maximum Operator Stroke	10 mm
Contact Resistance	50 mΩ maximum (initial value)
Insulation Resistance	100 MΩ minimum (500V DC megger)
Dielectric Strength	Between live and dead metal parts: Contacts: 2,500V AC, 1 minute Illuminated parts: 1,000V AC, 1 minute
Vibration Resistance	Damage limits: 30 Hz, amplitude 1.5 mm Operating extremes: 5 to 55 Hz, amplitude 0.5 mm
Shock Resistance	Damage limits: 1,000 m/s^2 Operating extremes: 100 m/s^2
Operating Frequency	900 operations/h
Life	Mechanical: 250,000 operations minimum Electrical: 100,000 operations minimum (at 900 operations/h, duty ratio 40%)
Degree of Protection	IP65
Terminal Style	M3.5 screw
Weight	49g (HW1E-BV402R) 56g (HW1E-LV402Q4R)

Contact Ratings

Rated Insulation Voltage (Ui)			250V		
Rated Thermal Current (Ith)			10A		
Rated Operational Voltage (Ue)			24V	110V	220V
Rated Operational Current	AC 50/60 Hz	Resistive Load (AC-12)	6A	3A	3A
		Inductive Load (AC-15)	6A	3A	3A
	DC	Resistive Load (DC-12)	6A	2A	1A
		Inductive Load (DC-13)	1.5A	0.3A	0.15A

- Minimum applicable load (reference value): 3V AC/DC, 5 mA (Applicable range may vary with operating conditions and load types.)
- The operational current represents the classification by making and breaking currents (IEC 60947-5-1).

LED Lamp Ratings

Rated Operating Voltage of Unit	LED Lamp		
	Part No.	Rated Voltage	Rated Current
6V AC/DC	**LSTD-6R**	6V AC/DC ±10%	7 mA
12V AC/DC	**LSTD-1R**	12V AC/DC ±10%	10 mA
24V AC/DC	**LSTD-2R**	24V AC/DC ±10%	10 mA

LED Internal Circuit

Internal Circuit	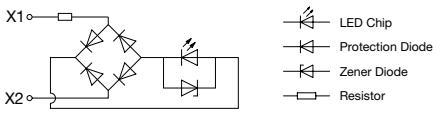

Pushlock Turn Reset Switches (Unibody)

Shape	Contact	Part No.	Button Color
ø40mm Mushroom Pushlock Turn Reset HW1E-BV4	1NO-1NC	**HW1E-BV411R**	Red only
	2NC	**HW1E-BV402R**	

- When pressed, the button is held depressed. The button is released by turning clockwise.

Illuminated Pushlock Turn Reset Switches (Unibody)

Shape	Contact	Part No.	Button Color
ø40mm Mushroom Pushlock Turn Reset HW1E-LV4	1NO-1NC	**HW1E-LV411Q0R**	Red only
	2NC	**HW1E-LV402Q0R**	

- When pressed, the button is held depressed. The button is released by turning clockwise.
- The illuminated pushlock turn reset switch does not contain a lamp. Order LED lamps separately. For lamps, see page 38.

Dimensions

HW1E-BV4

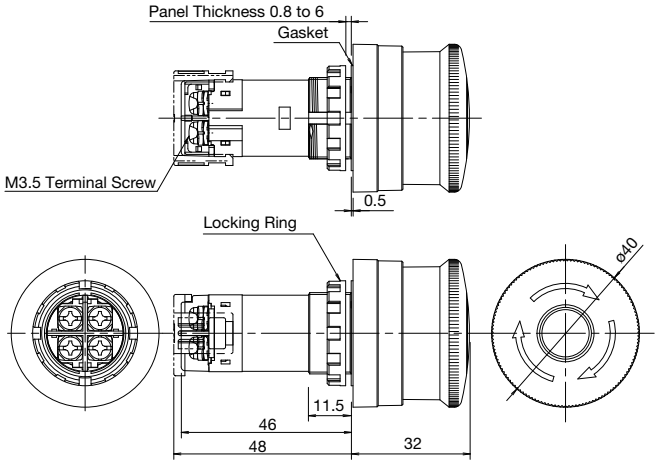

HW1E-LV4

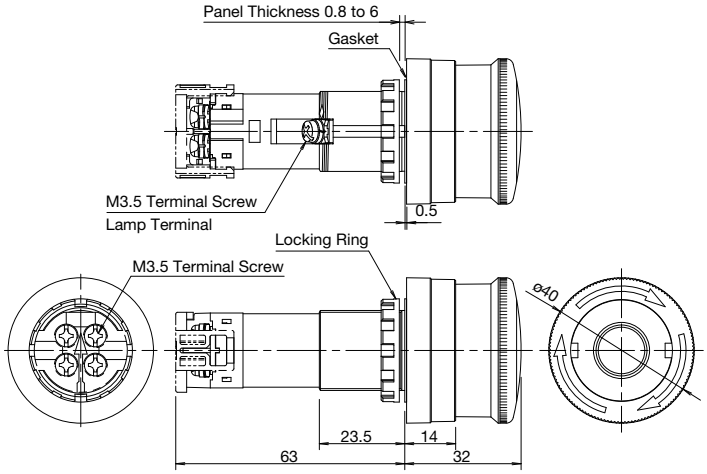

All dimensions in mm.

Mounting Hole

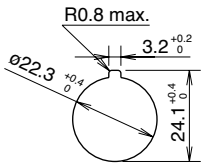

Determine the minimum mounting hole centers in consideration of convenience for wiring.

Terminal Arrangement (Bottom View)

HW1E-BV4

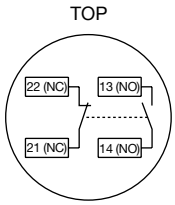

1NO-1NC

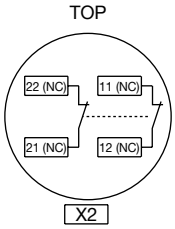

2NC

HW1E-LV4

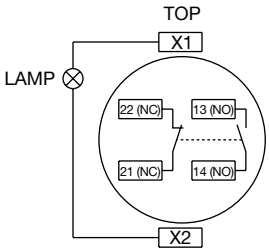

1NO-1NC

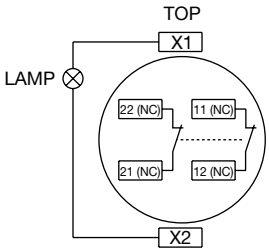

2NC

Emergency Stop Switches (w/Removable Contact Block) Specifications

Standards

Applicable Standards	Mark	File No. or Organization
UL508		UL Listing File No. E68961
CSA C22.2 No. 14		File No. LR92374
EN60947-5-5		TÜV Rheinland
		EU Low Voltage Directive
GB14048.5		CCC No.2005103050145656

Contact Ratings

Contact Block	Rated Insulation Voltage	600V
	Rated Thermal Current	10A
	Contact Ratings by Utilization Category IEC 60947-5-1	AC-15 (A600) DC-13

Characteristics

Contact Ratings by Utilization Category

Operational Voltage			24V	48V	50V	110V	220V	440V
Operational Current	AC 50/60 Hz	AC-12 Control of resistive loads and solid state loads	10A	—	10A	10A	6A	2A
		AC-15 Control of electromagnetic loads (> 72 VA)	10A	—	7A	5A	3A	1A
	DC	DC-12 Control of resistive loads and solid state loads	8A	4A	—	2.2A	1.1A	—
		DC-13 Control of electromagnets	4A	2A	—	1.1A	0.6A	—

Specifications

Operating Temperature	–25 to +60°C (no freezing)
Storage Temperature	–40 to +80°C
Operating Humidity	45 to 85% RH (no condensation)
Operating Force	50N
Minimum Force Required for Direct Opening Action	5.5 mm
Maximum Operator Stroke	10 mm
Contact Resistance	50 mΩ maximum (initial value)
Insulation Resistance	100 MΩ minimum (500V DC megger)
Dielectric Strength	Between live and dead metal parts Between terminals of different poles Between terminals of the same pole 2,500V AC, 1 minute
Vibration Resistance	Damage limits: 30 Hz, amplitude 1.5 mm Operating extremes: 5 to 55 Hz, amplitude 0.5 mm
Shock Resistance	Damage limits: 1000 m/s² Operating extremes: 100 m/s²
Operating Frequency	900 operations/h
Life	Mechanical: 500,000 operations minimum (push-pull: 250,000 operations) Electrical: 500,000 operations minimum (push-pull: 250,000 operations) (at 900 operations/h, duty ratio 40%)
Degree of Protection	IP65 (IEC 60529)
Terminal Style	M3.5 screw
Weight	76g (HW1B-V322) 99g (HW1B-X422R) 54g (HW1B-Y202) 79g (HW1B-V422R-EMO)

Pushlock Turn Reset Switches (with Removable Contact Block)

Shape	Contact	Part No.	Button Color
ø29mm Mushroom Pushlock Turn Reset HW1B-V3	1NC	**HW1B-V301①**	Specify a button color code in place of ① in the Part No. R: red Y: yellow
	1NO-1NC	**HW1B-V311①**	
	2NC	**HW1B-V302①**	
	2NO-2NC	**HW1B-V322①**	
ø40mm Mushroom Pushlock Turn Reset HW1B-V4 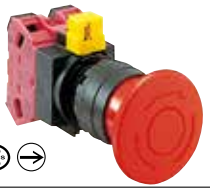	1NC	**HW1B-V401①**	
	1NO-1NC	**HW1B-V411①**	
	2NC	**HW1B-V402①**	
	2NO-2NC	**HW1B-V422①**	
ø60mm Mushroom Pushlock Turn Reset HW1B-V5 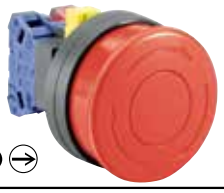	1NC	**HW1B-V501①**	
	1NO-1NC	**HW1B-V5⑥1①**	
	2NC	**HW1B-V502①**	
	2NO-2NC	**HW1B-V522①**	

- Yellow buttons cannot be used as emergency stop switches in compliance with EN standards.
- When pressed, the button is held depressed. The button is released by turning clockwise.
- Pushlock turn reset switches with one or three contact blocks contain a dummy block.
- Safety lever lock HW9Z-LS is supplied with the switch.
- Other contact arrangements and gold-plated silver contacts are also available. See page 35.

Pushlock Key Reset Switches (with Removable Contact Block)

Shape	Contact	Part No.	Button Color
ø40mm Mushroom Pushlock Key Reset HW1B-X4 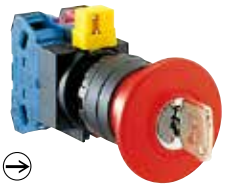	1NC	**HW1B-X401R**	Red only
	1NO-1NC	**HW1B-X411R**	
	2NC	**HW1B-X402R**	
	2NO-2NC	**HW1B-X422R**	

- When pressed, the button is held depressed. The button is released by turning the key clockwise.
- Pushlock key reset switches with one or three contact blocks contain a dummy block.
- Two identical keys and safety lever lock HW9Z-LS are supplied with the switch.
- Safety lever lock HW9Z-LS is supplied with the switch.
- Other contact arrangements and gold-plated silver contacts are also available. See Part No. Development.

Push-Pull Switches (with Removable Contact Block)

Shape	Contact	Part No.	Button Color
ø40mm Mushroom Push-Pull (2-position) HW1B-Y2 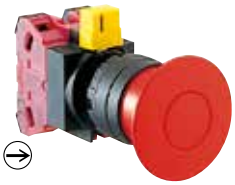	1NC	**HW1B-Y201①**	Specify a button color code in place of ① in the Part No. R: red Y: yellow
	1NO-1NC	**HW1B-Y211①**	
	2NC	**HW1B-Y202①**	

- The button is maintained at either pulled or depressed position.
- Push-pull switches are available with one or two contact blocks.
- Push-pull switches with one contact block contain a dummy block.
- Safety lever lock HW9Z-LS is supplied with the switch.

Accessory

Nameplate (for ø22 Emergency Stop Switches)

Shape	Name	Part No.	Legend	Package Quantity	Remarks
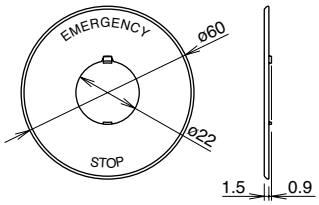	Nameplate for Emergency Stop Switch (See page 36 for panel cut-out.)	**HWAV-0-Y**	(blank)	1	Background: Yellow Legend: Black Applicable panel thickness: 0.8 to 4.5 mm Material: Polyamide Not applicable for ø60 mm mushroom buttons. Legend "EMERGENCY STOP" is indicated outside a ø44mm circle.
		HWAV-27-Y	EMERGENCY STOP		

- EMERGENCY OFF and white nameplates (blank) also available. See page 61 and 64 for details.

Part No. Development

Emergency Stop Switches (w/Removable Contact Block)

For emergency stop purposes, these switches must contain at least one NC contact block.

HW1B-V4 11 R -MAU

- -MAU: Optional contact
  - MAU: Gold-plated silver contact
- R: Button/lens color code
- 11: Contact arrangement code
  - 01: 1NC
  - 02: 2NC
  - 12: 1NO-2NC
  - 31: 3NO-1NC
  - 13: 1NO-3NC
  - 11: 1NO-1NC
  - 21: 2NO-1NC
  - 03: 3NC
  - 22: 2NO-2NC
  - 04: 4NC

Note: Push-pull HW1B-Y2 can have a maximum of two contact blocks.

Dimensions

ø29mm Pushlock Turn Reset
HW1B-V3

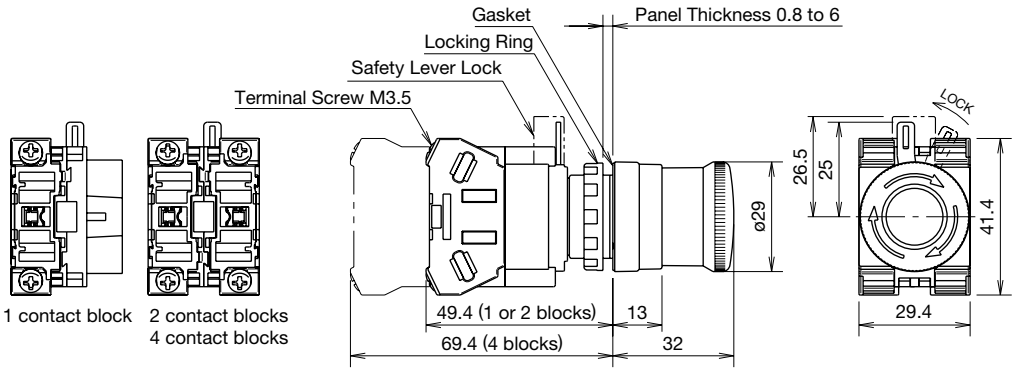

All dimensions in mm.

ø40mm Pushlock Turn Reset
HW1B-V4

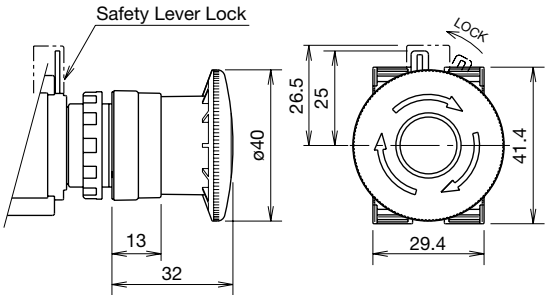

ø60mm Pushlock Turn Reset
HW1B-V5

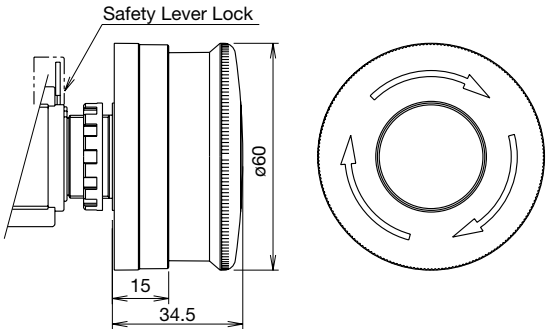

ø40mm Pushlock Key Reset
HW1B-X4

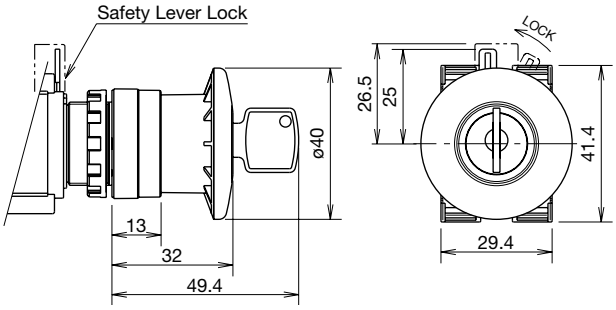

ø40mm Push-Pull
HW1B-Y2

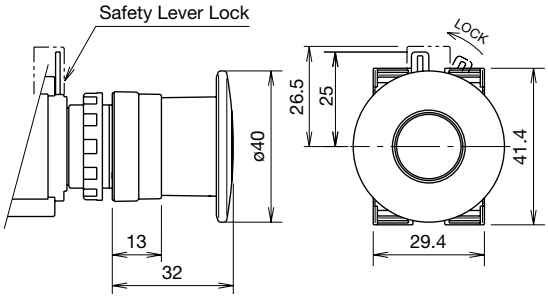

All dimensions in mm.

Panel Cut-Out

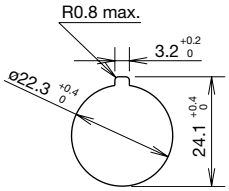

The minimum mounting centers shown below are applicable to emergency stop switches with one layer of contact blocks (two contact blocks). When two layers of contact blocks are mounted, determine the minimum mounting centers in consideration of convenience for wiring.

Minimum Mounting Centers for Emergency Stop Switches

Unit	Vertical Spacing	Horizontal Spacing
HW1B-V3 HW1B-V4 HW1B-X4 HW1B-Y2	50 mm minimum	50 mm minimum
HW1B-V5	60 mm minimum	60 mm minimum

Note: When using the safety lever lock, determine the vertical spacing in consideration of convenience for installing and removing the safety lever lock. Recommended vertical spacing: 100 mm

HW Series Emergency Stop Switches ø22

Accessories

Shape	Material	Part No.	Ordering No.	Package Quantity	Description & Dimensions (mm)
Locking Ring Wrench	Metal (weight: approx. 150g)	MW9Z-T1	MW9Z-T1	1	• Used to tighten the locking ring when installing the HW switch onto a panel. • Tighten the locking ring to a torque of 2.0 N·m. 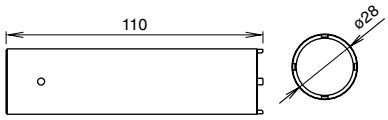
Lamp Holder Tool	Rubber	OR-55	OR-55	1	• Used to install and remove the LED lamps. 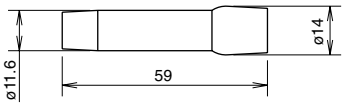
Rubber Mounting Hole Plug	Rubber (black)	OB-31	OB-31PN05	5	• Used to plug the unused ø22.2mm mounting holes. 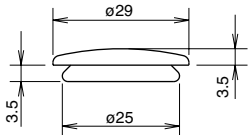
Metallic Mounting Hole Plug	Diecast Metal (locking ring: plastic)	LW9Z-BM	LW9Z-BM	1	• Used to plug the unused ø22.2mm mounting holes. • Tighten the locking ring to a torque of 1.2 N·m. • IP66 • Mounting panel thickness: 0.8 to 6 mm 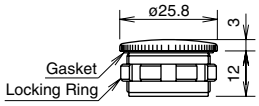
Barrier	Plastic	HW-VG1	HW-VG1PN10	10	• Used to prevent contact between adjacent lead wires when units are mounted closely. Barriers should always be used in close mounting. 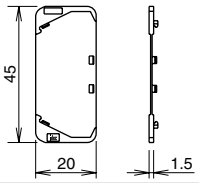
Ring Adapter	Rubber	HW9Z-A25	HW9Z-A25PN05	5	• Used to install the HW/TW units into ø25 mounting holes. • IP65 • Cannot be used with anti-rotation ring and nameplate. • Mounting panel thickness: 1.2 to 6.0 mm
Ring Adapter	Adapter: Plastic Washer: Metal	HW9Z-A30	HW9Z-A30PN02	2	• Used to install the HW units into ø30 mounting holes (except for HW1E and HW1B-M5/V5). • IP65 • Cannot be used with anti-rotation ring, nameplate, full-shroud illuminated pushbuttons, pushbutton selectors, and mono-lever switches. • Mounting panel thickness: 1.6 to 4.0 mm
Ring Adapter	Adapter: Rubber Washer: Metal	HW9Z-A30E	HW9Z-A30EPN02	2	• Used to install the HW1E units into ø30 mounting holes. • IP65 • Cannot be used with anti-rotation ring and nameplate. • Mounting panel thickness: 1.6 to 3.8 mm

Maintenance Parts

Shape	Material	Part No.	Ordering No.	Package Quantity	Description & Dimensions (mm)
Safety Lever Lock	Plastic	**HW9Z-LS**	**HW9Z-LSPN10**	10	• Yellow • 1 piece included as standard
Locking Ring	Polyamide	**HW9Z-LN**	**HW9Z-LNPN05**	5	• Black
Gasket	Nitryl rubber	**HW9Z-WM**	**HW9Z-WMPN10**	10	
Spare Key	Metal Brass, nickel-plated	**HW9Z-SK-231**	**HW9Z-SK-231PN02**	2	• For pushlock key reset switches

LED Lamps (LSTD)

Shape	Rated Operating Voltage	Current Draw		Part No.	Ordering No.	Package Quantity	Base	Dimensions (mm)
		AC	DC					
	6V AC/DC	17 mA (A, R, W, Y) 8 mA (G, PW, S)	14 mA (A, R, W, Y) 5.5 mA (G, PW, S)	**LSTD-6R**	**LSTD-6R**	1	BA9S/13	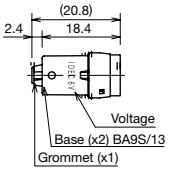
					LSTD-6RPN10	10		
	12V AC/DC	11 mA	10 mA	**LSTD-1R**	**LSTD-1R**	1		
					LSTD-1RPN10	10		
	24V AC/DC	11 mA	10 mA	**LSTD-2R**	**LSTD-2R**	1		
					LSTD-2RPN10	10		

Incandescent Lamps (LS)

Shape	Rated Operating Voltage	Lamp Ratings	Part No.	Package Quantity	Dimensions (mm)
	6V AC/DC	1W (6.3V)	**LS-6**	1	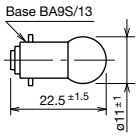
	12V AC/DC	1W (18V)	**LS-8**		
	18V AC/DC	1W (24V)	**LS-2**		
	24V AC/DC	1W (30V)	**LS-3**		

⚠ Safety Precautions

- Turn off the power to the HW series control units before starting installation, removal, wiring, maintenance, and inspection of the products. Failure to turn power off may cause electrical shocks or fire hazard.
- To avoid a burn on your hand, use the lamp holder tool when replacing lamps.
- For wiring, use wires of a proper size to meet the voltage and current requirements. Tighten the M3.5 terminal screws to a tightening torque of 1.0 to 1.3 N·m. Failure to tighten terminal screws may cause overheat and fire.

Instructions

Panel Mounting

Remove the contact block from the operator (for transformer pilot lights, remove the transformer from the illumination unit). Remove the locking ring from the operator. Insert the operator into the panel cut-out from the front, tighten the locking ring from the back, then install the contact block to the operator.

Removing and Installing the Contact Block

1. To remove the operator from the contact block, turn the locking lever in the direction of the arrow shown below. Then the operator can be pulled out.
2. To reinstall, place the TOP markings on the operator and the contact block mounting adapter in the same direction, and insert the operator into the contact block mounting adapter. Then turn the locking lever in the opposite direction.

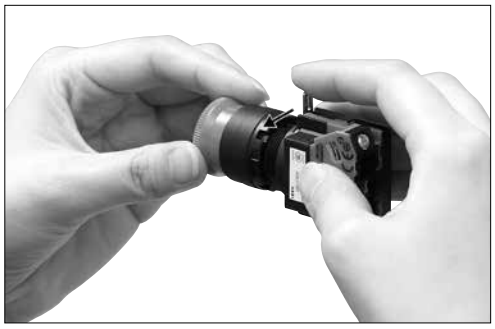

Notes for Panel Mounting

When mounting the operator onto a panel, use the optional locking ring wrench (MW9Z-T1) to tighten the locking ring. Tightening torque must not exceed 2.0 N·m. Do not use pliers. Excessive tightening will damage the locking ring.

Safety Lever Lock

IDEC strongly recommends using the safety lever lock (HW9Z-LS, yellow) to prevent heavy vibration or maintenance personnel from unlocking contacts.

1. HW series can be mounted vertically with a minimum spacing of 50 mm (70 mm for mono-lever switches) but spacing should be determined to ensure easy operation.
2. Mount the control unit onto the panel, lock the lever, and strongly push in the safety lever lock to install.
3. When the spacing is narrower than the recommended value, with the lever unlocked, mount the safety lever lock and insert the contact unit to the operator. Then, lock the lever and strongly push in the safety lever lock to install.
4. To remove the safety lever lock, insert a flat screwdriver into the safety lever lock and push upwards.

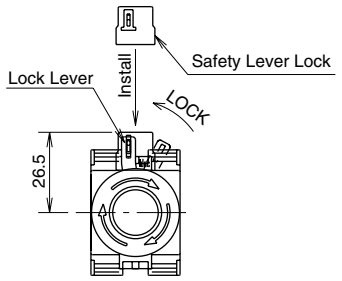

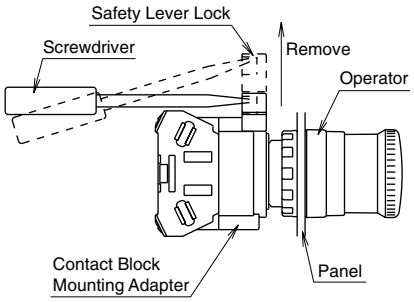

Emergency Stop Switches Specifications

Standards

Applicable Standards	Mark	File No. or Organization
UL508 CSA C22.2 No.14	c UL us LISTED	UL/c-UL Listed File No.E68961
EN60947-5-5	TÜV	TÜV SÜD
	CE	EU Low Voltage Directive
GB14048.5	CCC	CCC No. 2006010305196875

Specifications

Operating temperature	–20 to +55°C (no freezing)
Operating humidity	45 to 85% RH (no condensation)
Storage temperature	–45 to +80°C (no freezing)
Storage humidity	95% RH maximum
Degree of Protection	From panel front: IP65 (IEC 60529) Terminal: IP20 (IEC 60529)
Insulation Resistance	100 MΩ
Dielectric Strength	Contact block: 2,500V, 1 minute Pilot light: 2,000V, 1 minute
Vibration Resistance	Operating extremes / Damage limits: 10 to 500 Hz, amplitude 0.35 mm, acceleration 50 m/s²
Shock Resistance	Operating extremes: 150 m/s² (15G) Damage limits: 1,000 m/s² (100G)
Mechanical Life (minimum operations)	250,000 (single contact block)
Electrical Life (minimum operations)	100,000 (single contact block)

Contact Ratings (Contact Block)

Rated Insulation Voltage		600V			
Rated Thermal Current		10A			
Operating Voltage		24V	120V	240V	380V
AC 50/60 Hz	Resistive Load (AC-12)	10A	10A	6A	2A
	Inductive Load (AC-15)	10A	6A	3A	1.9A
DC	Resistive Load (DC-12)	8A	2.2A	1.1A	–
	Inductive Load (DC-13)	4A	1.1A	0.55A	–

LED Lamp Ratings

Part No.	Rated Voltage	Rated Current
LSED-6R	6V AC/DC	10 mA
LSED-1R	12V AC/DC	14 mA
LSED-2R	24V AC/DC	14 mA
LSED-HR	110/120V AC/DC	5.5 mA
LSED-M3R	230/240V AC/DC	2.7 mA

Incandescent Lamp Ratings

Part No.	Rated Voltage	Ratings
LS-T6	6V AC/DC	6.3V 1W
LS-T8	12V AC/DC	18V 1W
LS-T3	24V AC/DC	30V 1W

Mounting Hole Layout

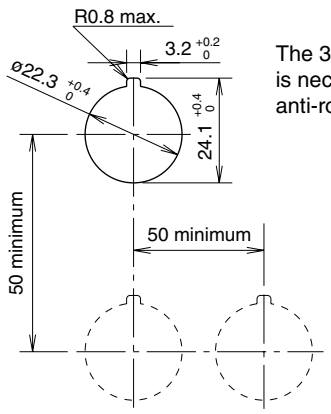

The 3.2-mm-wide key recess is necessary when the anti-rotation ring is used.

YW Series Emergency Stop Switches ø22

Pushlock Pull/Turn Reset

Style	Contact	Part No.	Button Color Code
ø40mm Mushroom	1NC	YW1B-V4E01R	Red only
	2NC	YW1B-V4E02R	
	3NC	YW1B-V4E03R	
	1NO-1NC	YW1B-V4E11R	
	1NO-2NC	YW1B-V4E12R	
	2NO-1NC	YW1B-V4E21R	

Dimensions

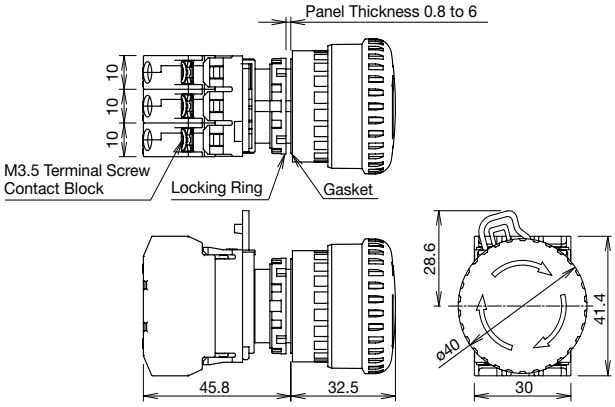

Note: When pressed, the button is locked in the depressed position, and is reset when either pulled or turned clockwise.

LED/Incandescent Illuminated Pushlock Pull/Turn Reset

Style	Lamp	Contacts	Part No.	③ Operating Voltage Code	Lens Color Code
ø40mm Mushroom	Without Lamp	1NC	YW1L-V4E01Q0R	0 (without lamp) 250V AC/DC max.	Red only
		2NC	YW1L-V4E02Q0R		
		1NO-1NC	YW1L-V4E11Q0R		
	LED	1NC	YW1L-V4E01Q③R	2 (6V AC/DC) 3 (12V AC/DC) 4 (24V AC/DC) H (110/120V AC/DC) M3 (230/240V AC/DC)	
		2NC	YW1L-V4E02Q③R		
		1NO-1NC	YW1L-V4E11Q③R		
	Incandescent	1NC	YW1L-V4E01Q③R	5 (6V AC/DC) 6 (12V AC/DC) 7 (24V AC/DC)	
		2NC	YW1L-V4E02Q③R		
		1NO-1NC	YW1L-V4E11Q③R		

Note: Specify an operating voltage code in place of ③ in the Part No.

Dimensions

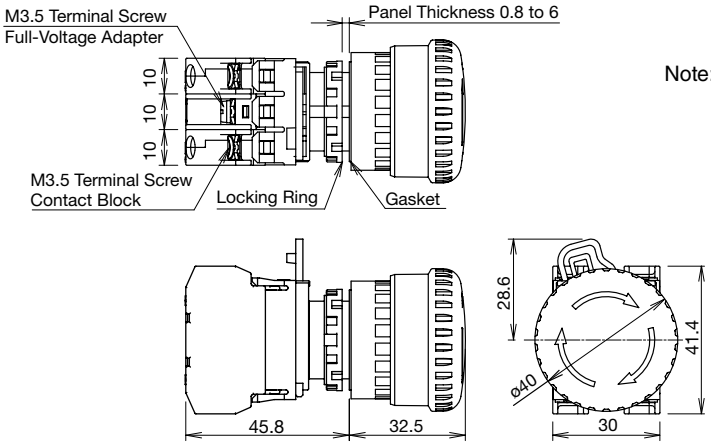

Note: When pressed, the button is locked in the depressed position, and is reset when either pulled or turned clockwise.

All dimensions in mm.

Accessories

Name & Shape	Part No.	Description & Dimensions (mm)	Package Quantity
Locking Ring Wrench	MW9Z-T1	Metallic tool used to tighten the plastic locking ring when installing the YW series control unit on a panel. 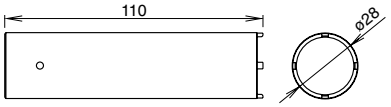	1
Lamp Holder Tool	OR-55	Made of rubber. Used for replacing lamps. 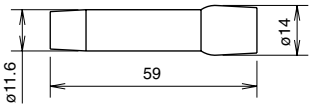	1
Rubber Mounting Hole Plug	OB-31PN05	Used for plugging unused mounting holes in the panel. Color: Black 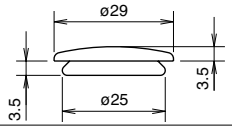	5
Metallic Mounting Hole Plug	LW9Z-BM	Used for plugging unused mounting holes in the panel. Weight: Approx. 18g 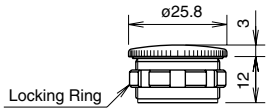	1
Anti-Rotation Ring	HW9Z-RLPN10	Prevents rotation of switches in panel. Mainly used with selector switches when no nameplate is used. With waterproof gasket (IP65). Made of plastic (black). Applicable panel thickness: 1.2 to 4.5 mm 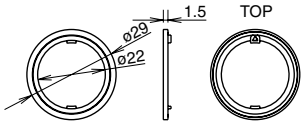	10
Padlock Cover	HW9Z-KL1	Plastic hinged cover to protect pushbuttons, illuminated pushbuttons, or selector switches. Degree of protection: IP65. Applicable panel thickness: 0.8 to 3.2 mm 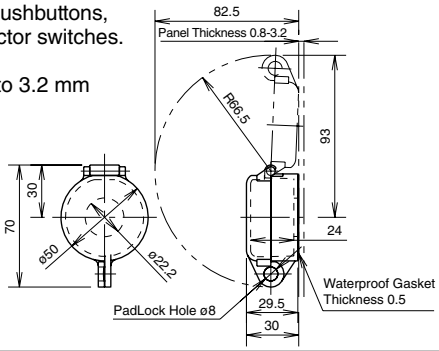	1

Maintenance Parts

Name & Shape	Part No.	Description & Dimensions (mm)			Package Quantity
LED Lamp	**LSED-6R**	6V AC/DC		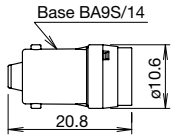	1
	LSED-1R	12V AC/DC			
	LSED-2R	24V AC/DC			
	LSED-HR	110/120V AC/DC			
	LSED-M3R	230/240V AC/DC			
Incandescent Lamp	**LS-T6P**	6.3V, 1W	One pack contains 100 incandescent lamps.	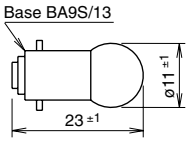	100
	LS-T8P	18V, 1W			
	LS-T3P	30V, 1W			
Single Contact Block	**YW-E10P**	Color: blue Contact: 1NO	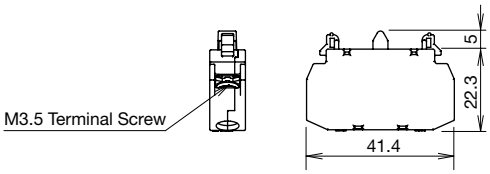		10
	YW-E01P	Color: reddish purple Contact: 1NC			

Nameplate (for ø22 Emergency Stop Switches)

Description	Legend	Material	Part No.	Ordering No.	Package Quantity	Dimensions (mm)
HWAV	Blank	Plastic (yellow) 1.5 mm thick	**HWAV-0-Y**	**HWAV-0-Y**	1	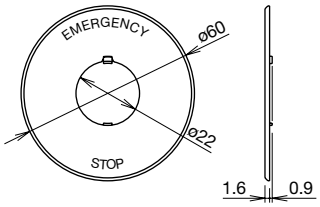 • Legend "Emergency Stop" is indicated outside a ø44mm circle.
	EMERGENCY STOP		**HWAV-27-Y**	**HWAV-27-Y**	1	

Din Rail Mount Transformer

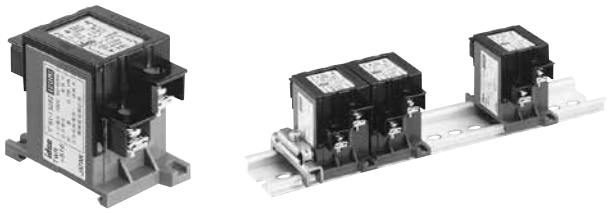

Primary Voltage (50/60 Hz)	Part No.	Applicable Lamp Rating
110V AC	TWR516	One full voltage illuminated unit containing LED lamp LSED-6 (6V AC/DC) or incandescent lamp LS-T6 (6.3V)
115V AC	TWR5116	
120V AC	TWR5126	
220V AC	TWR526	
230V AC	TWR5236	
240V AC	TWR5246	
380V AC	TWR5386	
440V AC	TWR546	
480V AC	TWR5486	

Dimensions (mm)

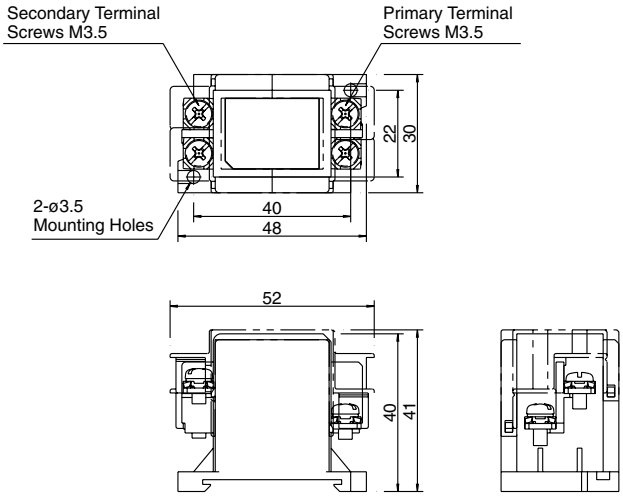

Note: Finger-safe terminal cover is supplied with the transformer.

Safety Precautions

- Turn off the power to the YW series control units before starting installation, removal, wiring, maintenance, and inspection of the products. Failure to turn power off may cause electrical shocks or fire hazard.
- To avoid burning your hand, use the lamp holder tool when replacing lamps.
- For wiring, use wires of a proper size to meet the voltage and current requirements. Tighten the M3.5 terminal screws to a tightening torque of 1.0 to 1.3 N·m. Failure to tighten the terminal screws may cause overheating and fire.

Instructions

Panel Mounting

- Remove the contact block from the operator. Remove the locking ring from the operator. Insert the operator into the panel cut-out from the front, tighten the locking ring from the back, then install the contact block to the operator.

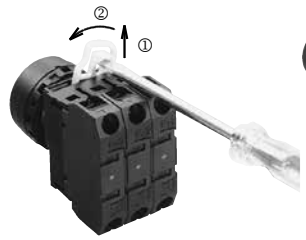

① Pull up the locking lever.
② Turn the lever to the left.

③ Pull out the contact block.

Removing and Installing the Contact Block

1. To remove the operator from the contact block, pull up the locking lever and turn it to the left. Then the operator can be pulled out.
2. To reinstall, place the TOP marking on the operator and the idec marking on the contact block mounting adapter in the same direction, and insert the operator into the contact block mounting adapter. Then turn the locking lever to the right.

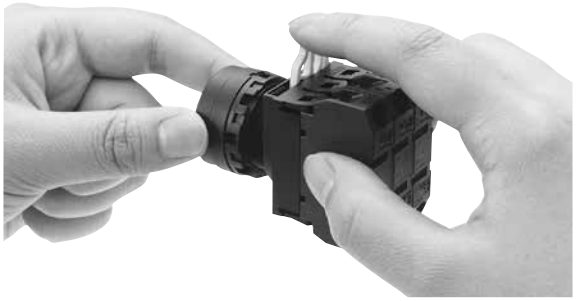

Notes for Panel Mounting

Use the optional locking ring wrench (MW9Z-T1) to mount the operator onto a panel. Tightening torque must not exceed 2.0 N·m. Do not use pliers. Excessive tightening will damage the locking ring.

Removing Contact Blocks and Full Voltage Adapter

Insert a flat screwdriver between the latch and contact block mounting adapter, and disengage the latch.

Make sure to remove the lamp and contact blocks before removing the full voltage adapter.

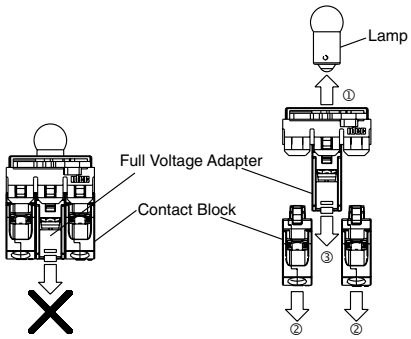

Instructions

Tightening Torque for Terminal Screws

Tighten terminal screws to a torque between 1.0 and 1.3 N·m.

Anti-rotation Ring and Mounting Panel

Turn the TOP marking on the operator and the ▲ mark on the anti-rotation ring to the recess on the mounting panel.

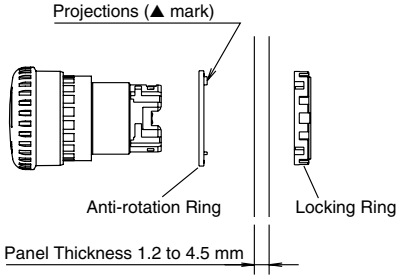

Mounting Panel Thickness

The mounting panel must be 0.8 to 6.0 mm in thickness. When optional accessories are added, the applicable panel thickness changes as shown below.

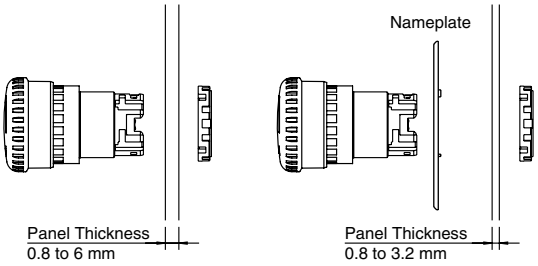

Contact Bounce

When the button is reset by pulling or turning, the NC main contacts will bounce. When pressing the button, the NO monitor contacts will bounce.
When designing a control circuit, take the contact bounce time into consideration (reference value: 20 ms).

Nameplate

When anti-rotation is not required, remove the projection from the nameplate using pliers.

Handling

Do not expose the switch to excessive shock and vibration, otherwise the switch may be deformed or damaged, causing malfunction or operation failure.

LED Illumination

LED lamps consist of semiconductors. If the applied voltage exceeds the rated voltage, LED elements deteriorate due to overheat, resulting in significant decrease in luminance, hue change, or failure of lighting. Also, if extraneous noise, transient voltage, or transient current is applied to the circuit, similar effects will be caused. When using LED lamps, observe the following instructions.

Rated Voltage

The LED illuminated units are rated at 6V, 12V, 24V, 110V, or 230/240V AC/DC, and can be used within ±10% the rated voltage of either AC or DC, except the 230/240V AC/DC can be used on 250V AC/DC maximum.

DC Power

1. Switching power supply
   Regulated voltage from switching power supply is best suited. Make sure to use within the rated voltage of the LED lamp.
2. Rechargeable battery
   Note that the battery voltage may exceed the rated voltage of the LED lamp while the battery is being charged and immediately after the charging is complete. Be sure to use the LED lamp on a voltage of ±10% the rated voltage, except the 230/240V AC/DC on 250V AC/DC maximum.
3. Full-wave rectification
   Since the LED lamp is AC/DC compatible, a diode bridge for recti fication is not necessary. If the LED lamp is used on a full-wave rectification current through a diode bridge, the rectifier diodes wil reduce the voltage, resulting in lower luminance.
4. Single-phase half-wave rectification
   This is not suitable for the power source of LED lamps. Use constant-voltage DC power.

Noise

LED elements deteriorate due to extraneous noise, resulting in significant decrease in luminance, hue change, or failure of lighting. When such effects are anticipated, take a protection measure shown below, such as RC elements or a surge absorber.

[Protection Example 1] For AC circuit

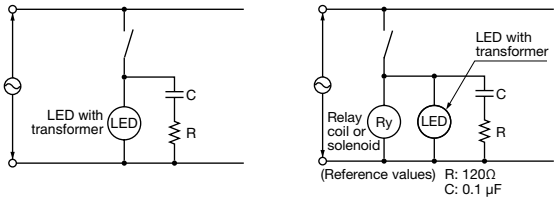

[Protection Example 2] For DC circuit

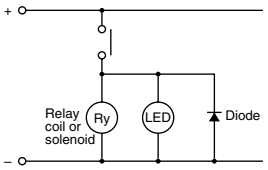

Countermeasures against Dim Lighting

1. Leakage currents through the transistors or a contact protection circuit may cause the LED lamp to illuminate dimly even when the output is off.
2. When the LED lamp is illuminated by a transistor output, take the following measure.

[Circuit Example]

Connect shunt resistor R in parallel with the LED lamp.

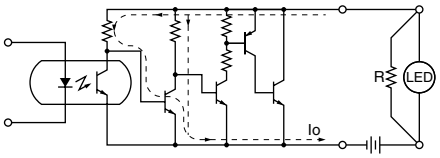

Io: Leakage current when the output is off
R: Shunt resistor

Ordering Information

- When ordering, specify the Part No. and quantity.
- Replacement contact blocks are supplied in a package containing 10 pieces.

ø30 XN Series Emergency Stop Switches

ø30 mm, 4-contact Emergency Stop Switch. Padlockable and flush bezel are available.

- Padlockable, flush bezel, ø60mm jumbo mushroom, illuminated, LED push-on are available.
- IDEC's original "Safe break action" and reverse energy structure ensure the highest level of safety.
- Safety lock mechanism (IEC 60947-5-5, 6.2)
- Direct opening action mechanism (IEC 60947-5-5, 5.2, IEC60947-5-1, Annex K)
- Short depth behind the panel – only 47.7 mm for 4-contact, illuminated (flush bezel: 60.4 mm, padlockable: 61.4 mm)
- Padlockable can be locked using padlocks when latched (main contact: OFF). The rugged aluminum diecast shroud allows for installing a maximum of 20 padlocks using a hasp (total weight: 1500g maximum).
- Gold-plated silver contacts.
- Red (Munsell 5R4/12) or bright red (Munsell 7.5R4.5/14) colors are available.

Direct Opening Action

Standards

Applicable Standards	Mark	File No. or Organization
UL508 CSA C22.2 No. 14	c UL us LISTED	UL/c-UL File No. E68961
IEC60947-5-5 UL991 NFPA79	UL LISTED EMERGENCY STOP DEVICE	UL Listing File No. E305148
EN60947-5-5	TÜV	TÜV SÜD
	CE	EU Low Voltage Directive
GB14048.5	CCC	CCC No. 2008010305290010

Contact Ratings

NC main contacts/NO monitor contacts

Rated Insulation Voltage (Ui)				250V		
Rated Thermal Current (Ith)				5A		
Rated Operating Voltage (Ue)				30V	125V	250V
Rated Operating Current	Main Contacts	AC 50/60 Hz	Resistive Load (AC-12)	–	5A	3A
			Inductive Load (AC-15)	–	3A	1.5A
		DC	Resistive Load (DC-12)	2A	0.4A	0.2A
			Inductive Load (DC-13)	1A	0.22A	0.1A
	Monitor Contacts	AC 50/60 Hz	Resistive Load (AC-12)	–	1.2A	0.6A
			Inductive Load (AC-14)	–	0.6A	0.3A
		DC	Resistive Load (DC-12)	2A	0.4A	0.2A
			Inductive Load (DC-13)	1A	0.22A	0.1A
Contact Material				Gold-plated Silver		

- Minimum applicable load: 5V AC/DC, 1 mA (reference value) (May vary depending on the operating conditions and load types.)
- The rated operating currents are measured at resistive/inductive load types specified in IEC 60947-5-1.

Illumination Ratings (LED)

Rated Voltage	Operating Voltage	Rated Current
24V AC/DC	24V AC/DC ±10%	15 mA

Specifications

Applicable Standards	IEC60947-5-1, EN60947-5-1 IEC60947-5-5, EN60947-5-5 JIS C8201-5-1, UL508, UL991, NFPA79 CSA C22.2 No. 14, GB14048.5
Operating Temperature	Non-illuminated: –25 to +60°C (no freezing) Illuminated: –25 to +55°C (no freezing)
Storage Temperature	–45 to +80°C
Operating Humidity	45 to 85% RH (no condensation)
Minimum Force Required for Direct Opening Action	80N
Minimum Operator Stroke Required for Direct Opening Action	4.0 mm
Maximum Operator Stroke	4.5 mm
Contact Resistance	50 mΩ maximum (initial value)
Insulation Resistance	100 MΩ minimum (500V DC megger)
Overvoltage Category	II
Impulse Withstand Voltage	2.5 kV
Pollution Degree	3
Operating Frequency	900 operations/hour
Shock Resistance	Operating extremes: 150 m/s² Damage limits: 1000 m/s²
Vibration Resistance	Operating extremes: 10 to 500 Hz, amplitude 0.35 mm, acceleration 50 m/s² Damage limits: 10 to 500 Hz, amplitude 0.35 mm, acceleration 50 m/s²
Durability (at 900 operations/h, on-duration 40%)	Mechanical: 250,000 operations minimum Electrical: 100,000 operations minimum 250,000 operations minimum (24V AC/DC, 100 mA)
Degree of Protection	Operator: IP65 (IEC60529) Terminal: IP20 (when XW9Z-VL2MF is installed)
Short-circuit Protection	250V/10A fuse (Type aM, IEC60269-1/IEC60269-2)
Conditional Short-circuit Current	1000A
Terminal Style	M3 screw terminal
Recommended Tightening Torque for Terminal Screw	0.6 to 1.0 N·m
Recommended Tightening Torque for Locking Ring	2.5 N·m
Applicable Wire Size	0.75 to 1.25 mm² (AWG18 to 16)
Total Weight of a Hasp and Padlocks	1500g maximum (padlockable)
Reinforced Insulation (IEC 60664-1)	Between live part and metal bezel (flush bezel, padlockable)
Weight	83g (XN1E-LV404Q4MR) 93g (XN1E-BV504MR) 89g (XN5E-LV404Q4MR) 120g (XN4E-LL404Q4MR)

Plastic Bezel

Non-illuminated Pushlock Pull/Turn Reset (Screw Terminal)

Shape	NC Main Contact	NO Monitor Contact	Part No.		①Operator Color Code
			IP20 Fingersafe Terminal	w/Terminal Cover	
ø40mm Mushroom	1NC	—	XN1E-BV401MF①	XN1E-BV401M①	R: Red RH: Bright red
	2NC	—	XN1E-BV402MF①	XN1E-BV402M①	
	3NC	—	XN1E-BV403MF①	XN1E-BV403M①	
	4NC	—	XN1E-BV404MF①	XN1E-BV404M①	
	1NC	1NO	XN1E-BV411MF①	XN1E-BV411M①	
	2NC	1NO	XN1E-BV412MF①	XN1E-BV412M①	
	3NC	1NO	XN1E-BV413MF①	XN1E-BV413M①	
	2NC	2NO	XN1E-BV422MF①	XN1E-BV422M①	
ø60mm Jumbo Mushroom	1NC	—	XN1E-BV501MF①	XN1E-BV501M①	
	2NC	—	XN1E-BV502MF①	XN1E-BV502M①	
	3NC	—	XN1E-BV503MF①	XN1E-BV503M①	
	4NC	—	XN1E-BV504MF①	XN1E-BV504M①	
	1NC	1NO	XN1E-BV511MF①	XN1E-BV511M①	
	2NC	1NO	XN1E-BV512MF①	XN1E-BV512M①	
	3NC	1NO	XN1E-BV513MF①	XN1E-BV513M①	
	2NC	2NO	XN1E-BV522MF①	XN1E-BV522M①	

- Specify a color code in place of ① in the Part No.
- Only solid wires can be used on the IP20 fingersafe terminal switches.

Illuminated Pushlock Pull/Turn Reset (Screw Terminal)

Shape	Illumination	Rated Voltage	NC Main Contact	NO Monitor Contact	Part No.		Operator Color
					IP20 Fingersafe Terminal	w/Terminal Cover	
ø40mm Mushroom	LED	24V AC/DC	1NC	—	XN1E-LV401Q4MFR	XN1E-LV401Q4MR	Red only
			2NC	—	XN1E-LV402Q4MFR	XN1E-LV402Q4MR	
			3NC	—	XN1E-LV403Q4MFR	XN1E-LV403Q4MR	
			4NC	—	XN1E-LV404Q4MFR	XN1E-LV404Q4MR	
			1NC	1NO	XN1E-LV411Q4MFR	XN1E-LV411Q4MR	
			2NC	1NO	XN1E-LV412Q4MFR	XN1E-LV412Q4MR	
			3NC	1NO	XN1E-LV413Q4MFR	XN1E-LV413Q4MR	
			2NC	2NO	XN1E-LV422Q4MFR	XN1E-LV422Q4MR	

- Only solid wires can be used on the IP20 fingersafe terminal switches.

Illuminated Push-ON Pushlock Pull/Turn Reset (Screw Terminal)

Shape	Illumination	Rated Voltage	NC Main Contact	NO Monitor Contact	Part No.		Operator Color
					IP20 Fingersafe Terminal	w/Terminal Cover	
ø40mm Mushroom	LED	24V AC/DC	2NC	—	XN1E-TV402Q4MFR	XN1E-TV402Q4MR	Red only
			3NC	—	XN1E-TV403Q4MFR	XN1E-TV403Q4MR	
			2NC	1NO	XN1E-TV412Q4MFR	XN1E-TV412Q4MR	

- Push-ON is illuminated when the operator is latched, and turns off when reset.
- Only solid wires can be used on the IP20 fingersafe terminal switches.

XN Series Emergency Stop Switches ø30

Flush Bezel

Non-illuminated Pushlock Pull/Turn Reset (Screw Terminal)

Shape	NC Main Contact	NO Monitor Contact	Part No.		Operator Color Code
			IP20 Fingersafe Terminal	w/Terminal Cover	
ø40mm Mushroom	1NC	—	XN5E-BV401MF①	XN5E-BV401M①	R: Red RH: Bright red
	2NC	—	XN5E-BV402MF①	XN5E-BV402M①	
	3NC	—	XN5E-BV403MF①	XN5E-BV403M①	
	4NC	—	XN5E-BV404MF①	XN5E-BV404M①	
	1NC	1NO	XN5E-BV411MF①	XN5E-BV411M①	
	2NC	1NO	XN5E-BV412MF①	XN5E-BV412M①	
	3NC	1NO	XN5E-BV413MF①	XN5E-BV413M①	
	2NC	2NO	XN5E-BV422MF①	XN5E-BV422M①	

- Specify a color code in place of ① in the Part No.
- Only solid wires can be used on the IP20 fingersafe terminal switches.

Illuminated Pushlock Pull/Turn Reset (Screw Terminal)

Shape	Illumination	Rated Voltage	NC Main Contact	NO Monitor Contact	Part No.		Operator Color
					IP20 Fingersafe Terminal	w/Terminal Cover	
ø40mm Mushroom	LED	24V AC/DC	1NC	—	XN5E-LV401Q4MFR	XN5E-LV401Q4MR	Red only
			2NC	—	XN5E-LV402Q4MFR	XN5E-LV402Q4MR	
			3NC	—	XN5E-LV403Q4MFR	XN5E-LV403Q4MR	
			4NC	—	XN5E-LV404Q4MFR	XN5E-LV404Q4MR	
			1NC	1NO	XN5E-LV411Q4MFR	XN5E-LV411Q4MR	
			2NC	1NO	XN5E-LV412Q4MFR	XN5E-LV412Q4MR	
			3NC	1NO	XN5E-LV413Q4MFR	XN5E-LV413Q4MR	
			2NC	2NO	XN5E-LV422Q4MFR	XN5E-LV422Q4MR	

- Only solid wires can be used on the IP20 fingersafe terminal switches.

Illuminated Push-ON Pushlock Pull/Turn Reset (Screw Terminal)

Shape	Illumination	Rated Voltage	NC Main Contact	NO Monitor Contact	Part No.		Operator Color
					IP20 Fingersafe Terminal	w/Terminal Cover	
ø40mm Mushroom	LED	24V AC/DC	2NC	—	XN5E-TV402Q4MFR	XN5E-TV402Q4MR	Red only
			3NC	—	XN5E-TV403Q4MFR	XN5E-TV403Q4MR	
			2NC	1NO	XN5E-TV412Q4MFR	XN5E-TV412Q4MR	

- Push-ON is illuminated when the operator is latched, and turns off when reset.
- Only solid wires can be used on the IP20 fingersafe terminal switches.

Padlockable

Non-illuminated Pushlock Turn Reset (Padlockable) (Screw Terminal)

Shape	NC Main Contact	NO Monitor Contact	Part No.		Operator Color
			IP20 Fingersafe Terminal	w/Terminal Cover	
ø44mm Mushroom	1NC	—	XN4E-BL401MFRH	XN4E-BL401MRH	Bright red only
	2NC	—	XN4E-BL402MFRH	XN4E-BL402MRH	
	3NC	—	XN4E-BL403MFRH	XN4E-BL403MRH	
	4NC	—	XN4E-BL404MFRH	XN4E-BL404MRH	
	1NC	1NO	XN4E-BL411MFRH	XN4E-BL411MRH	
	2NC	1NO	XN4E-BL412MFRH	XN4E-BL412MRH	
	3NC	1NO	XN4E-BL413MFRH	XN4E-BL413MRH	
	2NC	2NO	XN4E-BL422MFRH	XN4E-BL422MRH	

- Only solid wires can be used on the IP20 fingersafe terminal switches.
- Padlocks and hasps are not supplied with the emergency stop switches and must be ordered separately. See page 53.

Illuminated Pushlock Turn Reset (Padlockable) (Screw Terminal)

Shape	Illumination	Rated Voltage	NC Main Contact	NO Monitor Contact	Part No.		Operator Color
					IP20 Fingersafe Terminal	w/Terminal Cover	
ø44mm Mushroom	LED	24V AC/DC	1NC	—	XN4E-LL401Q4MFR	XN4E-LL401Q4MR	Red only
			2NC	—	XN4E-LL402Q4MFR	XN4E-LL402Q4MR	
			3NC	—	XN4E-LL403Q4MFR	XN4E-LL403Q4MR	
			4NC	—	XN4E-LL404Q4MFR	XN4E-LL404Q4MR	
			1NC	1NO	XN4E-LL411Q4MFR	XN4E-LL411Q4MR	
			2NC	1NO	XN4E-LL412Q4MFR	XN4E-LL412Q4MR	
			3NC	1NO	XN4E-LL413Q4MFR	XN4E-LL413Q4MR	
			2NC	2NO	XN4E-LL422Q4MFR	XN4E-LL422Q4MR	

- Only solid wires can be used on the IP20 fingersafe terminal switches.
- Padlocks and hasps are not supplied with the emergency stop switches and must be ordered separately. See page 53.

LED Push-ON Pushlock Turn Reset (Padlockable) (Screw Terminal)

Shape	Illumination	Rated Voltage	NC Main Contact	NO Monitor Contact	Part No.		Operator Color
					IP20 Fingersafe Terminal	w/Terminal Cover	
ø44mm Mushroom	LED	24V AC/DC	2NC	—	XN4E-TL402Q4MFR	XN4E-TL402Q4MR	Red only
			3NC	—	XN4E-TL403Q4MFR	XN4E-TL403Q4MR	
			2NC	1NO	XN4E-TL412Q4MFR	XN4E-TL412Q4MR	

- Push-ON is illuminated when the operator is latched, and turns off when reset.
- Only solid wires can be used on the IP20 fingersafe terminal switches.
- Padlocks and hasps are not supplied with the emergency stop switches and must be ordered separately. See page 53.

Dimensions

Plastic Bezel

Non-illuminated

IP20 Fingersafe

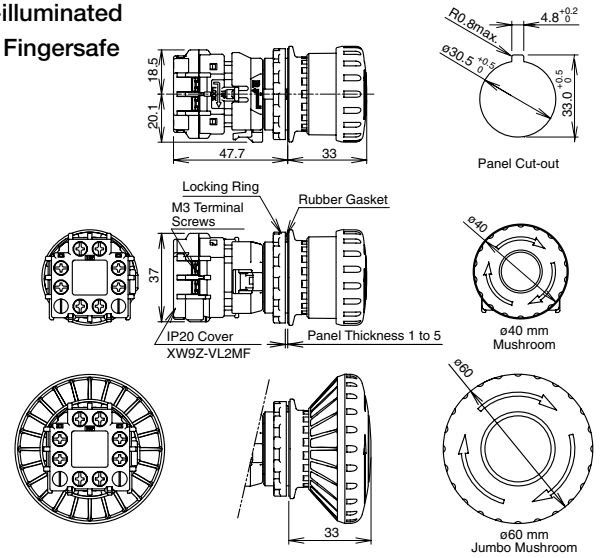

w/Terminal Cover

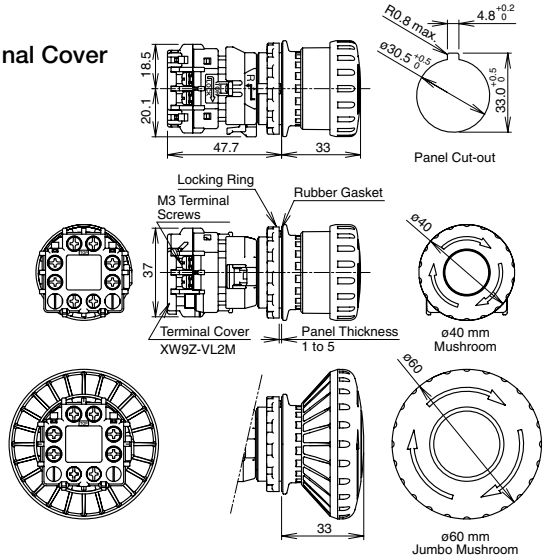

Illuminated/Push-ON

IP20 Fingersafe

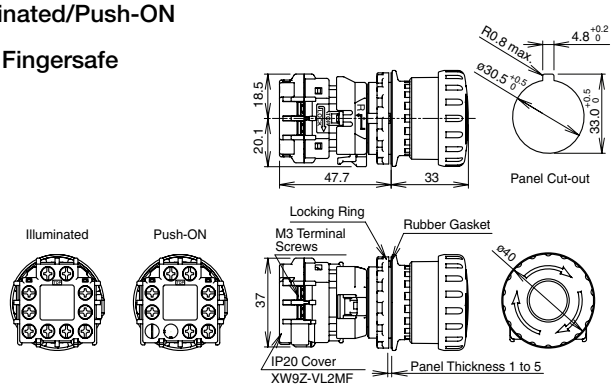

w/Terminal Cover

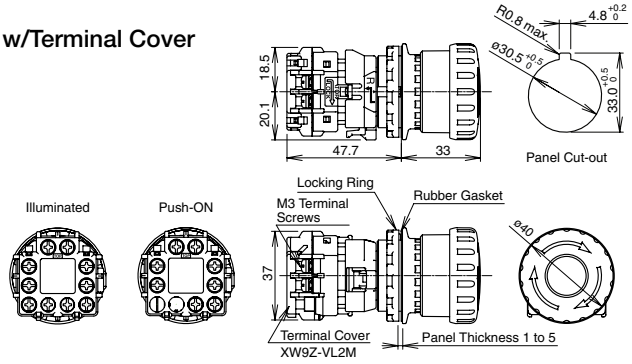

Flush Bezel

Non-Illuminated

IP20 Fingersafe

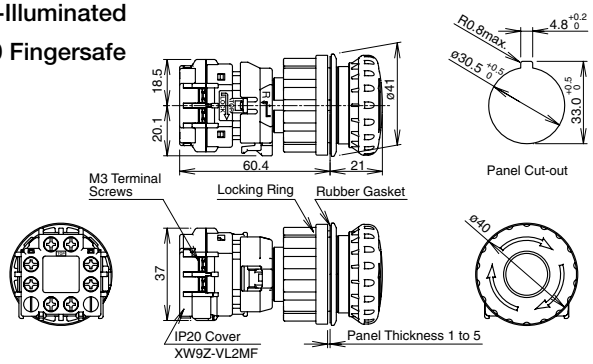

w/Terminal Cover

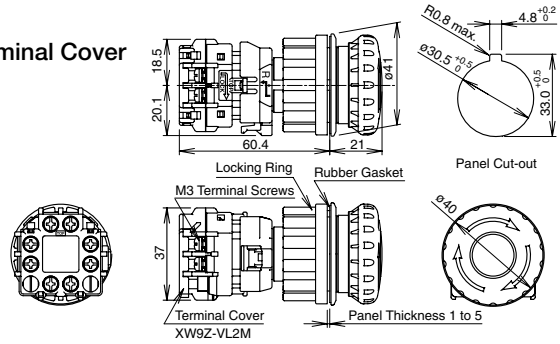

Illuminated/Push-ON

IP20 Fingersafe

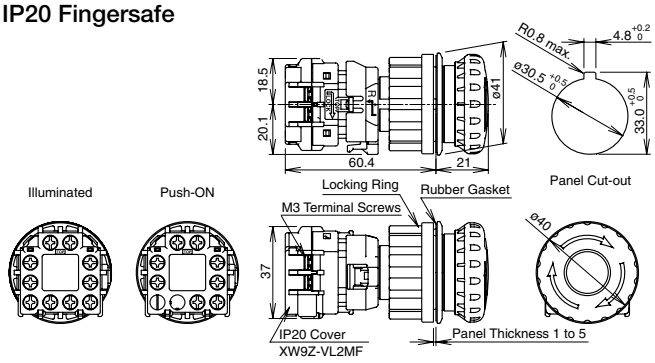

w/Terminal Cover

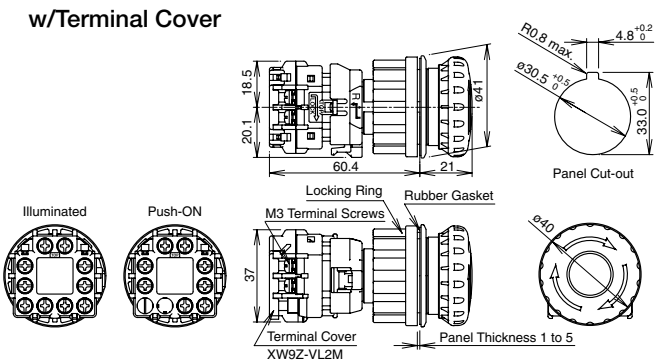

All dimensions in mm.

Dimensions

Padlockable

Non-illuminated

IP20 Fingersafe

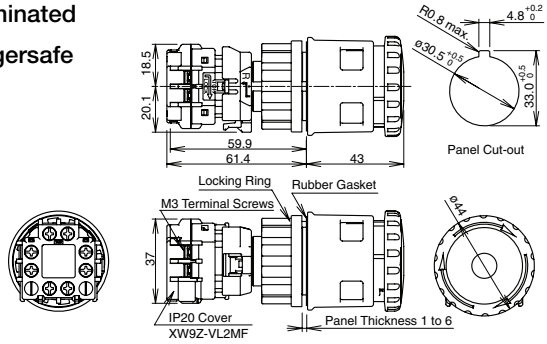

w/Terminal Cover

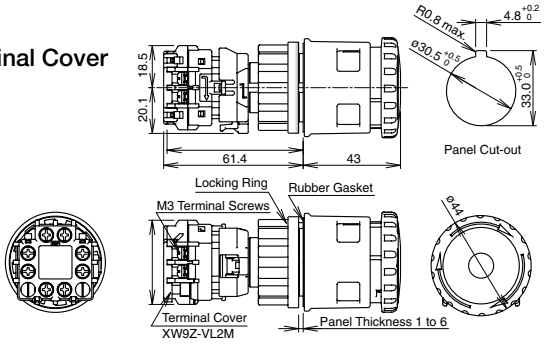

Illuminated/Push-ON

IP20 Fingersafe

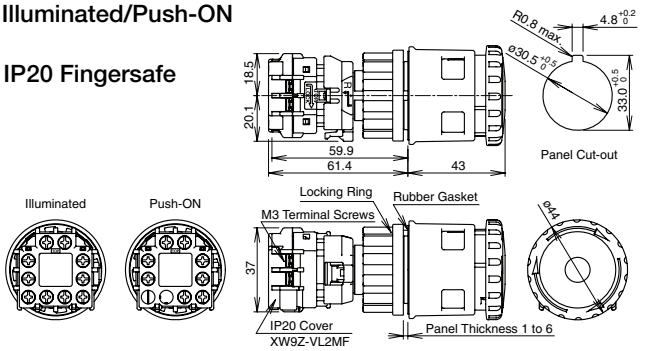

w/Terminal Cover

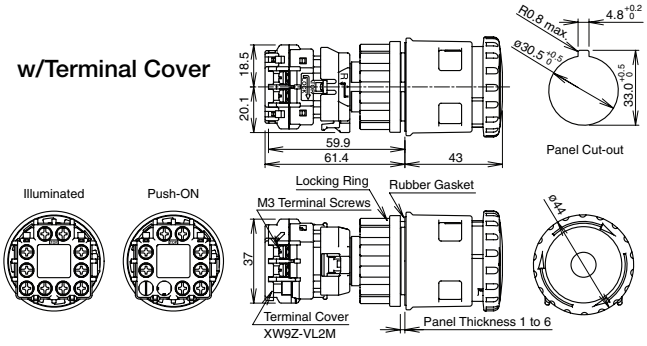

Mounting Hole Layout

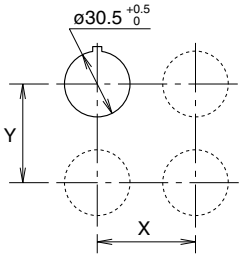

	X	Y
Plastic Bezel	70 mm minimum	
Flush Bezel		

- The values shown above are the minimum dimensions for mounting with other ø30 mm pushbuttons. For other control units of different sizes and styles, determine the values according to the dimensions, operation, and wiring convenience.
- For padlockable, determine the values according to the size and number of padlocks and hasp.

LED Unit Internal Circuit

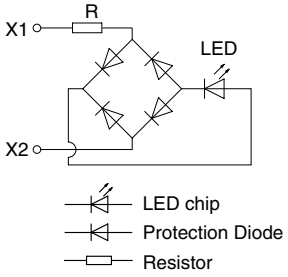

Terminal Arrangement (Bottom View)

Non-illuminated

NC main contacts only

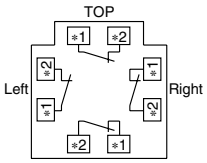

1NC: Terminals on right
2NC: Terminals on right and left
3NC: Terminals on right, left, and top

With 1NO monitor contact

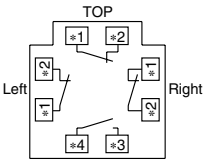

1NC: Terminals on top
2NC: Terminals on right and left

With 2NO monitor contacts

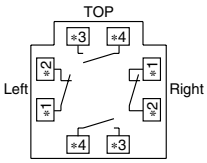

Illuminated

NC main contacts only

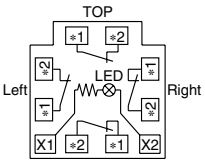

1NC: Terminals on right
2NC: Terminals on right and left
3NC: Terminals on right, left, and top

With 1NO monitor contact

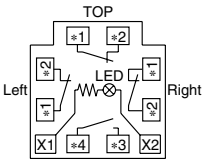

1NC: Terminals on top
2NC: Terminals on right and left

With 2NO monitor contacts

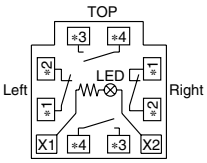

Push-ON

NC main contacts only

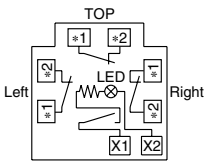

2NC: Terminals on right and left
3NC: Terminals on right, left, and top

With 1NO monitor contact

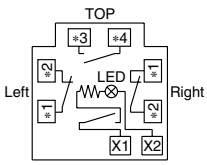

- Contact
  1-2: NC main contact (black)
  3-4: NO monitor contact (blue)
- Contact Number (1-4)
  Starting with the contact of TOP side, in a counter-clockwise direction.

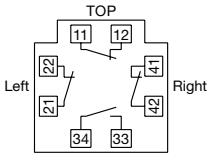

(Example: 1NO-3NC contact)

Applicable Crimping Terminal

Ring Terminal

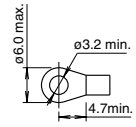

Spade Terminal

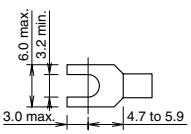

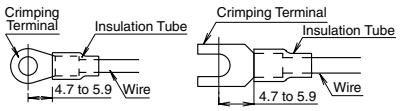

- Be sure to install an insulating tube on the crimping terminal.

Solid Wire

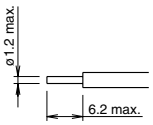

Only solid wire can be used for IP20.

All dimensions in mm.

Accessories and Replacement Parts

Name & Shape	Material	Part No.	Ordering No.	Package Quantity	Remarks
Terminal Cover	PPE	**XW9Z-VL2M**	**XW9Z-VL2MPN02**	2	• Black • Used for screw terminals. • Attached to IP20 protection cover units.
IP20 Fingersafe Terminal Cover	Polyamide	**XW9Z-VL2MF**	**XW9Z-VL2MFPN02**	2	• Black • Used to change terminal cover to IP20 fingersafe terminal. • Only solid wires can be used. Once installed, IP20 terminal cover cannot be removed.
Ring Wrench	Brass	**XN9Z-T1**	**XN9Z-T1**	1	• Used to tighten the locking ring when installing the XN emergency stop switch onto a panel. 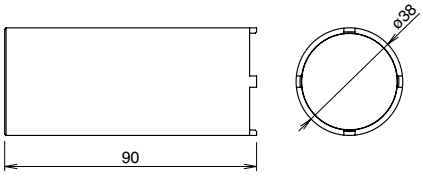
Ring Wrench	Steel Trivalent chromate plating	**TWST-T1**	**TWST-T1**	1	• Used to tighten the locking ring when installing the XN emergency stop switch onto a panel. 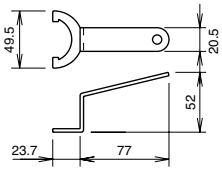

- The XN series emergency stop switches are supplied with either terminal cover or IP20 fingersafe terminal cover.
- Padlocks and hasps are not supplied and must be ordered separately.

Nameplates (for ø30 Emergency Stop Switches)

Description & Shape	Legend	Part No.	Package Quantity	Dimensions (mm)
	(blank)	HNAV-0	1	Polyamide Mounting panel thickness XN4E-□L4: 1.0 to 4.5 mm XN□E-□V4: 1.0 to3.5 mm 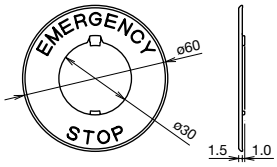
	EMERGENCY STOP	HNAV-27		

Plate color: Yellow (Munsell 2.5Y 8/10 or equivalent),
Legend: Black

Padlock and Hasp

Padlocks and hasps of the following specifications can be used with padlockable emergency stop switches.

Padlock Size

a	b	c	d
7 mm maximum	19 mm minimum	39 mm minimum	15 mm minimum (Note)

Note: When the padlock is installed from the side of the bezel, dimension d requires a minimum of 6 mm. When the padlock is installed from the front of the button, dimension d requires a minimum of 15 mm.

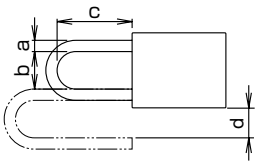

Recommended Hasp

Maker	Part No.
PANDUIT CORP.	PSL-HD3 PSL-1A
Master Lock® Company LLC	420, 421

Use only padlocks or hasps that satisfy the specifications shown on the left. The maximum total weight for padlocks and hasps is 1500g.
Make sure that the total weight does not exceed 1500g, otherwise the XN emergency stop switch may be damaged.
Make sure that locking and unlocking of the padlock and hasp do not interfere with other devices.
Padlocks and hasps are available from the following manufacturers.

Manufacturer	URL
PANDUIT CORP.	http://www.panduit.com/
Master Lock® Company LLC	http://www.masterlock.com/

Operating Instructions

Removing the Contact Block

First unlock the operator button. Grab the yellow bayonet ring ① and pull back the bayonet ring until the latch pin clicks ②, then turn the contact block counterclockwise and pull out ③.

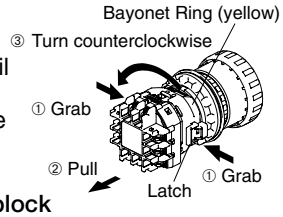

Notes for removing the contact block

1. Do not attempt to remove the contact block while the operator is latched, otherwise the switch may be damaged.
2. When the contact block is removed, the monitor contact (NO contact) is closed.
3. While removing the contact block, do not use excessive force, otherwise the switch may be damaged.
4. An LED lamp is built into the contact block for illuminated pushbuttons. When removing the contact block, pull the contact block straight to prevent damage to the LED lamp. If excessive force is used, the LED lamp may be damaged and fail to light.

Panel Mounting

Remove the locking ring from the operator and check that the rubber gasket is in place. Insert the operator from panel front into the panel hole. Face the side without thread on the operator with TOP marking upward, and tighten the locking ring using ring wrench XN9Z-T1 or TWST-T1 to a torque of 2.5 N·m maximum.

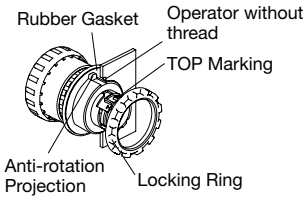

When using a nameplate

When using a nameplate HNAV-□, break the projection from the nameplate using pliers.

Installing the Contact Block

First unlock the operator button. Align the small ▼ marking on the edge of the operator with the small ▲ marking on the yellow bayonet ring. Hold the contact block, not the bayonet ring. Press the contact block onto the operator and turn the contact block clockwise until the bayonet ring clicks.

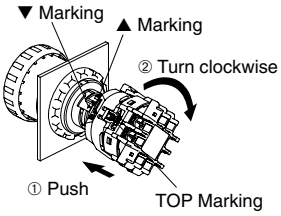

Notes for installing the contact block

1. Do not attempt to install the contact block when the operator is latched, otherwise the switch may be damaged.
2. Make sure that the bayonet ring is in the locked position.

Installing & Removing Terminal Covers

XW9Z-VL2M

To install the terminal cover, align the TOP marking on the terminal cover with the TOP marking on the contact block. Place the two projections on the bottom side of the contact block into the slots in the terminal cover. Press the terminal cover toward the contact block.

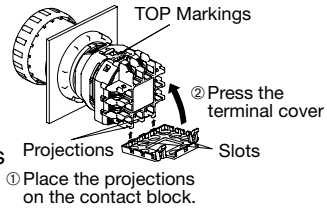

To remove the terminal cover, pull out the two latches on the top side of the terminal cover. Do not exert excessive force to the latches, otherwise the latches may break.

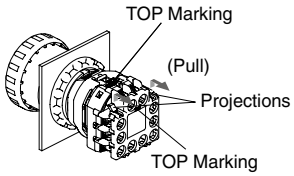

IP20 Fingersafe Terminal Cover XW9Z-VL2MF

To install the IP20 fingersafe terminal cover, align the TOP marking on the cover with the TOP marking on the contact block, and press the cover toward the contact block.

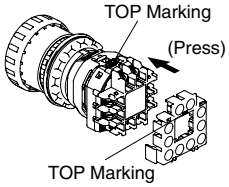

Notes:

1. Once installed, the XW9Z-VL2MF cannot be removed.
2. With the XW9Z-VL2MF installed, crimping terminals cannot be used. Use solid wires.
3. The XW9Z-VL2MF cannot be installed after wiring.
4. Make sure that the XW9Z-VL2MF is securely installed. IP20 cannot be achieved when installed loosely, and electric shocks may occur.

Notes for Operation

When using the XN emergency stop switches in safety-related part of a control system, observe safety standards and regulations of the relevant country or region. Also be sure to perform a risk assessment before operation.

Wiring

Tighten the M3 terminal screws to a torque of 0.6 to 1.0 N·m.

Contact Bounce

When the button is reset by pulling or turning, the NC main contacts will bounce. When pressing the button, the NO monitor contacts will bounce.
When designing a control circuit, take the contact bounce time into consideration (reference value: 20 ms).

LED Illuminated Switches

An LED lamp is built into the contact block and cannot be replaced.

Handling

Do not expose the switch to excessive shocks and vibrations, for example by operating the switch with tools. Otherwise the switch may be deformed or damaged, causing malfunction or operation failure.

ø30 HN Series Emergency Stop Switches

Emergency Stop Switches (Unibody) Specifications

Standards

Applicable Standards	Mark	File No. or Organization
UL508 CSA C22.2 No. 14		UL Listing File No. E55996
EN60947-5-5		TÜV SÜD
		EU Low Voltage Directive
GB14048.5		CCC No. 2013010305610376

Contact Ratings

Rated Insulation Voltage (Ui)			250V		
Rated Thermal Current (Ith)			10A		
Rated Operational Voltage (Ue)			24V	110V	220V
Rated Operational Current	AC 50/60 Hz	Resistive Load (AC-12)	6A	3A	3A
		Inductive Load (AC-15)	6A	3A	3A
	DC	Resistive Load (DC-12)	6A	2A	1A
		Inductive Load (DC-13)	1.5A	0.3A	0.15A

Note: The operational current represents the classification by making and breaking currents (IEC 60947-5-1).
Minimum applicable load (reference value): 3V AC/DC, 5 mA (Applicable range may vary with operating conditions and load types.)

LED Lamp Ratings

Rated Operating Voltage of Unit	LED Lamp		
	Part No.	Rated Voltage	Rated Current
24V AC/DC	**LSTD-2R**	24V AC/DC ±10%	10 mA

Incandescent Lamp Ratings

Unit Rated Operating Voltage	Incandescent Lamp	
	Part No.	Wattage
24V AC/DC	LS-3	1W (30V)

Specifications

Operating Temperature	–25 to +60°C (no freezing) Illuminated units: –25 to +55°C
Storage Temperature	–40 to +80°C
Operating Humidity	45 to 85% RH (no condensation)
Operating Force	50N
Minimum Force Required for Direct Opening Action	5.5 mm
Maximum Operator Stroke	10 mm
Contact Resistance	50 mΩ maximum (initial value)
Insulation Resistance	100 MΩ minimum (500V DC megger)
Dielectric Strength	Between live and dead metal parts Contacts: 2,500V AC, 1 minute Illuminated parts: 1,000V AC, 1 minute
Vibration Resistance	Damage limits: 30 Hz, amplitude 1.5 mm Operating extremes: 5 to 55 Hz, amplitude 0.5 mm
Shock Resistance	Damage limits: 1,000 m/s² Operating extremes: 100 m/s²
Operating Frequency	900 operations/h
Life	Mechanical: 250,000 operations minimum Electrical: 100,000 operations minimum
Degree of Protection	IP65
Terminal Style	M3.5 screw
Weight (approx.)	58g (HN1E-BV402R) 65g (HN1E-LV402Q4R)

Pushlock Turn Reset Switches (Unibody)

Shape	Contact	Part No.	Button Color
	1NO-1NC	**HN1E-BV411R**	Red only
	2NC	**HN1E-BV402R**	

- When pressed, the button is held depressed. The button is released by turning clockwise.
- Terminal cover HW-VL7 is supplied with the switch.

Illuminated Pushlock Turn Reset Switches (Unibody)

Shape	Lamp	Contact	Part No.	Lens Color
	Without Lamp	1NO-1NC	**HN1E-LV411Q0R**	Red only
		2NC	**HN1E-LV402Q0R**	

- When pressed, the button is held depressed. The button is released by turning clockwise.
- Terminal cover HW-VL7 is supplied with the switch.

Maintenance Parts

Name	Part No.	Ordering No.	Package Quantity
Terminal Cover for HW1E	**HW-VL7**	**HW-VL7PN10**	10

Dimensions

HN1E-BV4

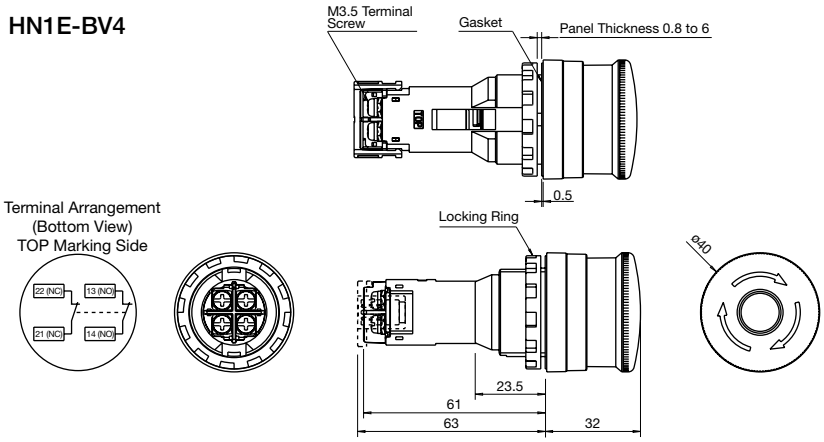

Panel Cut-Out

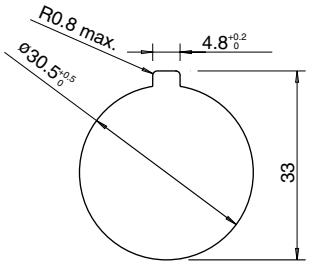

HN1E-LV4

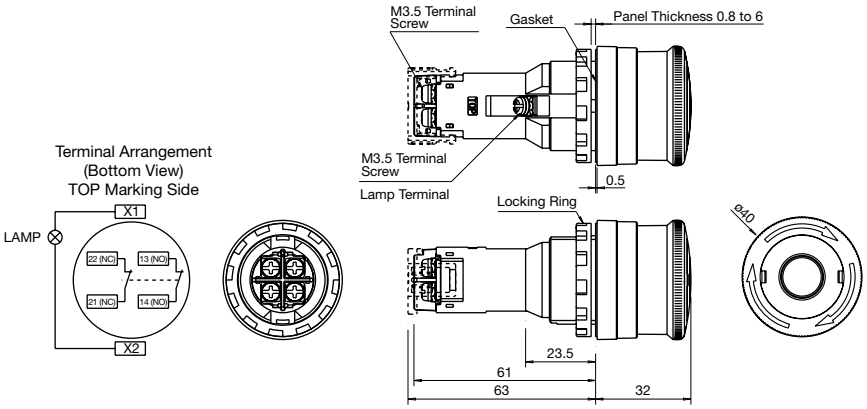

All dimensions in mm.

Accessories

Shape	Material	Part No.	Package Quantity	Remarks
Ring Wrench	Metal	**TWST-T1**	1	Used for tightening the locking nut. Tighten the locking nut to a torque of 2.0 to 2.5 N·m. 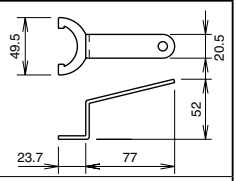
Ring Wrench	Brass	**XN9Z-T1**	1	• Used to tighten the locking ring when installing the XN emergency stop switch onto a panel. 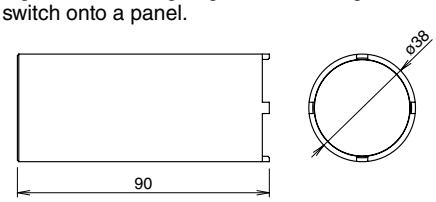

Nameplates (for ø30 Emergency Stop Switches)

Shape	Part No.	Legend	Package Quantity	Remarks
	HNAV-0	(blank)	1	Background: Yellow Legend: Black Applicable panel thickness: 0.8 to 4.5 mm Material: Polyamide Legend "EMERGENCY STOP" is indicated outside a ø44mm circle. 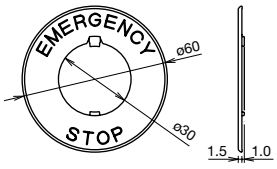
	HNAV-27	EMERGENCY STOP		

⚠ Safety Precautions

- Turn off the power to the HN series before starting installation, removal, wiring, maintenance, and inspection. Failure to turn power off may cause electrical shocks or fire hazard.
- To avoid a burn on your hand, use the lamp holder tool when replacing lamps.
- For wiring, use wires of a proper size to meet the voltage and current requirements. Tighten the M3.5 terminal screws to a tightening torque of 1.0 to 1.3 N·m. Failure to tighten terminal screws may cause overheat and fire.

Operating Instructions

Panel Mounting

Tighten the locking ring using ring wrench XN9Z-T1 or TWST-T1 to a torque of 2.0 N·m maximum. Do not use pliers. Excessive tightening will damage the locking ring.

Installing and Removing the Lens

There is a groove each on the right and left of the lens. Insert a flat screwdriver into one of them and push upward. Take care not lose a lens.

Replacing the LED lamp

Use the lamp holder tool (OR-55) to replace the LED lamp from the front of the panel.

[How to Remove]
To remove, slip the lamp holder tool (OR-55) onto the lamp head lightly. Then push slightly, and turn the lamp holder tool counterclockwise.

[How to Install]
To install, insert the lamp head into the lamp holder tool (OR-55).

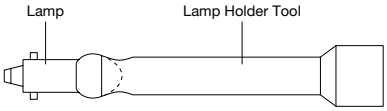

Place the pins on the lamp base to the grooves in the lamp socket. Inset the lamp and turn it clockwise.

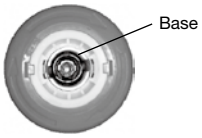

Do not apply excessive force onto the lamp in the base, otherwise the base will be damaged.

Notice on Wiring

When wiring, provide sufficient insulation between wires (crimping terminals).

Recommended Tightening Torque

1.0 to 1.3 N·m

SEMI Emergency Off (EMO) Switches

ø16mm XA Series EMO Switches (Solder Terminal) (Pushlock Turn Reset Switch) Package Quantity: 1

Shape	NC Main Contact	NO Monitor Contact	Part No.
ø40mm Mushroom	1NC	—	XA1E-BV401RH-EMO
	2NC	—	XA1E-BV402RH-EMO
	3NC	—	XA1E-BV403RH-EMO
	4NC	—	XA1E-BV404RH-EMO
	1NC	1NO	XA1E-BV411RH-EMO
	2NC	1NO	XA1E-BV412RH-EMO
	3NC	1NO	XA1E-BV413RH-EMO

- Button color is bright red (RH).
- For detailed specifications and instructions, see page 15.

ø22mm XW Series EMO Switch (Pushlock Turn Reset Switch) Package Quantity: 1

Shape	NC Main Contact	NO Monitor Contact	Part No.	
			IP20 Fingersafe Terminal	w/Terminal Cover
ø40mm Mushroom 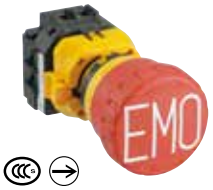	1NC	—	XW1E-BV401MFRH-EMO	XW1E-BV401MRH-EMO
	2NC	—	XW1E-BV402MFRH-EMO	XW1E-BV402MRH-EMO
	3NC	—	XW1E-BV403MFRH-EMO	XW1E-BV403MRH-EMO
	4NC	—	XW1E-BV404MFRH-EMO	XW1E-BV404MRH-EMO
	1NC	1NO	XW1E-BV411MFRH-EMO	XW1E-BV411MRH-EMO
	2NC	1NO	XW1E-BV412MFRH-EMO	XW1E-BV412MRH-EMO
	3NC	1NO	XW1E-BV413MFRH-EMO	XW1E-BV413MRH-EMO
	2NC	2NO	XW1E-BV422MFRH-EMO	XW1E-BV422MRH-EMO

- Button color is bright red (RH).
- For detailed specifications and instructions, see page 21.

ø22mm HW Series EMO Switches (Screw Terminal) (Pushlock Turn Reset Switch) Package Quantity: 1

Shape	Contact Arrangement	Part No.	Button Color
ø40mm Mushroom	1NC	HW1B-V401R-EMO	Red only
	1NO-1NC	HW1B-V411R-EMO	
	2NC	HW1B-V402R-EMO	
	2NO-2NC	HW1B-V422R-EMO	

- For detailed specifications and instructions, see page 34.

Dimensions

ø16mm XA Series EMO Switches

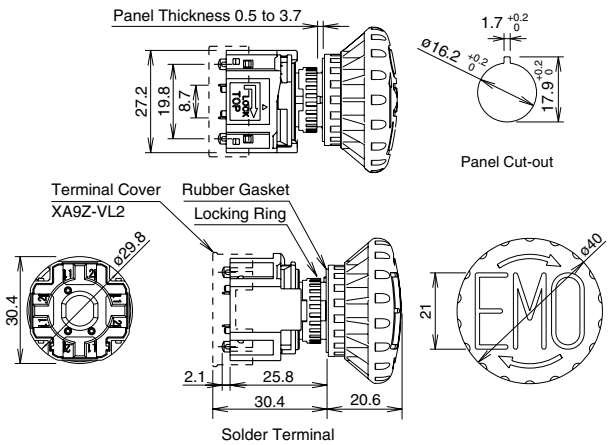

ø22mm XW Series EMO Switches

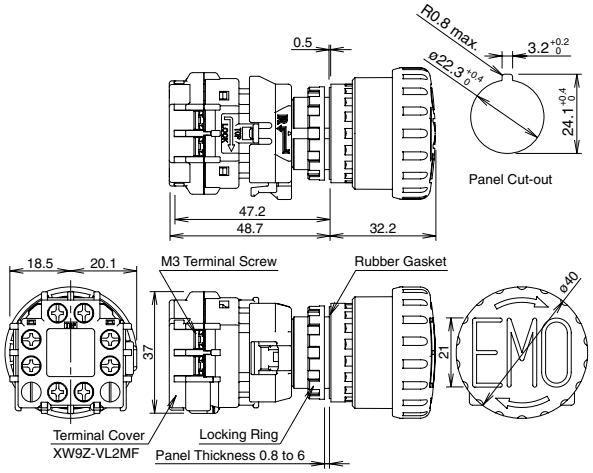

ø22mm HW Series EMO Switches

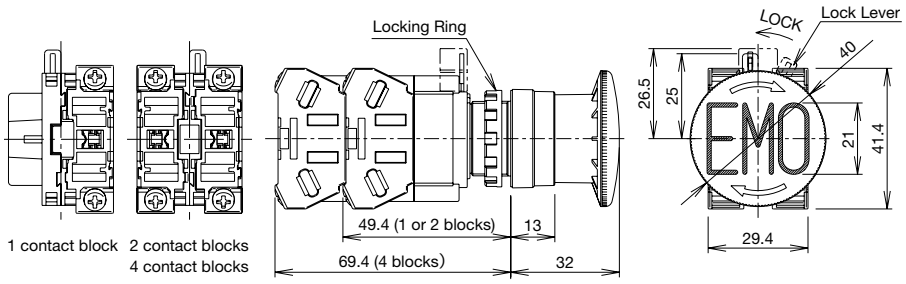

All dimensions in mm.

SEMI EMO Switch Guards

The combination of IDEC's EMO switch guards and emergency stop switches are approved by TÜV Rheinland for compliance with SEMI S2 standards.

SEMI S2-compliant Combinations

EMO Switch Guard	Applicable Emergency Stop Switches
XA9Z-KG1	XA1E-BV4****-EMO (①), XA1E-BV3 (②), XA1E-LV3 (③), XA1E-BV4 (③), XA1E-LV4 (③)
HW9Z-KG3	XW1E-BV4****-EMO (④), XW1E-BV4 (⑤), XW1E-LV4 (⑤), XW1E-TV4 (⑤), HW1B-V3 (⑥), HW1B-V4 (⑦), HW1B-X4 (⑧), HW1B-Y2 (⑨)
HW9Z-KG4	XW1E-BV4****-EMO (⑩), XW1E-BV4 (⑪), XW1E-LV4 (⑪), XW1E-TV4 (⑪), XW1E-BV5 (⑫) HW1B-V3 (⑬), HW1B-V4 (⑭), HW1E (⑮), HW1B-X4 (⑯), HW1B-Y2 (⑰)
HW9Z-KG5	XW1E-BV4****-EMO (⑱), XW1E-BV4 (⑲), XW1E-LV4 (⑲), XW1E-TV4 (⑲), XW1E-BV5 (⑳), HW1B-V3 (㉑), HW1B-V4 (㉒), HW1E (㉓), HW1B-X4 (㉔), HW1B-Y2 (㉕)

XA9Z-KG1

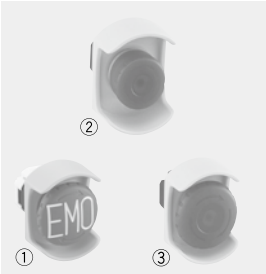

HW9Z-KG3

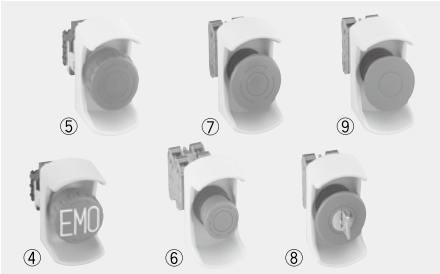

HW9Z-KG4

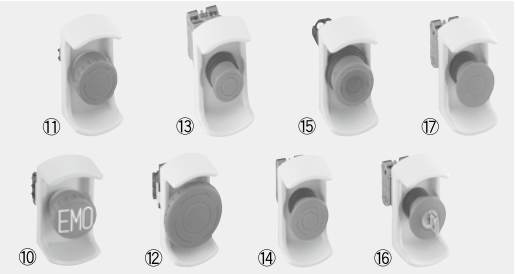

HW9Z-KG5

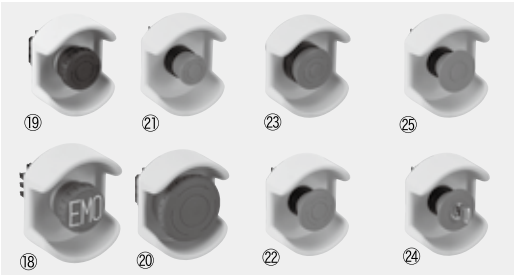

Note:
EMO switch guards have been designed for applications in semiconductor manufacturing equipment only. Do not use EMO switch guards with emergency stop switches which are installed on machine tools or food processing machines. (Machinery Directive of the European Commission and IEC 60204-1 require that emergency stop switches be installed in a readily accessible area, and the usage of switch guards is not permitted.)

About SEMI

SEMI is an international industry association whose member companies produce materials, equipment, and related technology for manufacturing semiconductor, flat panel display (FPD), and micro-electromechanical systems (MEMS) products. The SEMI safety guideline was published for the semiconductor industry and it is observed with the same importance as standards.
SEMI S2-0706, 12.1 describes as follows; "The equipment should have an 'emergency off' (EMO) circuit. The EMO actuator (e.g., button), when activated, should place the equipment into a safe shutdown condition, without generating any additional hazard to personnel or the facility." Because the semiconductor environment involves solvents and chemicals in many cases, some of which are toxic, interrupting the power source may cause secondary accidents. SEMI safety guideline requires the installation of an emergency off switch which disconnects only the part responsible for the hazardous situation, and maintains the functions of safety-related devices (e.g., smoke detectors, gas/water leak detectors, pressure measurement devices, etc.).
Emergency off buttons should be located or guarded to minimize accidental activation (SEMI S2-0706, 12.5.1). The emergency off button should be red and mushroom shaped. A yellow background for the EMO should be provided (SEMI S2-0706, 12.3).

- Location of EMO switches on semiconductor manufacturing equipment
  Acceptance criteria: controls should not be located above 1638 mm (64.5 in.) or below 838 mm (33 in.) (SEMI S8-0705, 9.1.2).
- No operation or regularly scheduled maintenance location should require more than 3 m (10 feet) travel to an EMO button (S2-0706, 12.5.2).

EMO button ←(3 m maximum)→ Operator ←(3 m maximum)→ EMO button

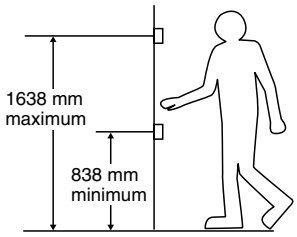

SEMI S2 Compliant Switch Guards

Switch Guards

Package Quantity: 1

Series	Description & Shape	Part No.	Applicable Switches	Remarks
ø16mm XA Series	ø16 mm EMO Switch Guard 	XA9Z-KG1	XA1E-BV3 XA1E-BV4 XA1E-LV3 XA1E-LV4	• SEMI S2 compliant (The combination of IDEC's emergency stop switches and EMO switch guards are approved by TÜV Rheinland for compliance with SEMI S2 standard.)
ø22mm HW/XW Series	ø22 mm EMO Switch Guard 	HW9Z-KG1	XW1E-BV4 XW1E-LV4 XW1E-TV4 HW1B-V3 HW1B-V4 HW1B-X4 HW1B-Y2 HW1E-BV4 HW1E-LV4	• SEMI S2-0703, 12.5.1 compliant. • Widely used switch guard in many applications.
	ø22 mm EMO Switch Guard 	HW9Z-KG2	XW1E-BV4 XW1E-LV4 XW1E-TV4 HW1B-V3 HW1B-V4 HW1B-X4 HW1B-Y2 HW1E-BV4 HW1E-LV4	• SEMI S2-0703, 12.5.1 compliant. • SEMATECH Application Guide for SEMI S2-93, 12.4. compliant. • The round shape is effective to prevent inadvertent operation from any direction.
	ø22 mm EMO Switch Guard 	HW9Z-KG3	XW1E-BV4 XW1E-LV4 XW1E-TV4 HW1B-V3 HW1B-V4 HW1B-X4 HW1B-Y2	• SEMI S2 compliant (The combination of IDEC's emergency stop switches and EMO switch guards are approved by TÜV Rheinland for compliance with SEMI S2 standard.) • The smallest switch guard for ø22 series switches. • Can be installed on FB control boxes.
	ø22 mm EMO Switch Guard 	HW9Z-KG4∗	XW1E-BV4 XW1E-BV5 XW1E-LV4 XW1E-TV4 HW1B-V3 HW1B-V4 HW1B-X4 HW1B-Y2 HW1E-BV4 HW1E-LV4	• SEMI S2 compliant (The combination of IDEC's emergency stop switches and EMO switch guards are approved by TÜV Rheinland for compliance with SEMI S2 standard.) • SEMATECH Application Guide for SEMI S2-93, 12.4. compliant. • Narrower than HW9ZKG5. Saves more space. • Can be installed on FB control boxes. • Available in white.
	ø22 mm EMO Switch Guard 	HW9Z-KG5∗	XW1E-BV4 XW1E-LV4 XW1E-TV4 XW1E-BV5 HW1B-V3 HW1B-V4 HW1B-X4 HW1B-Y2 HW1E-BV4 HW1E-LV4	• SEMI S2 compliant (The combination of IDEC's emergency stop switches and EMO switch guards are approved by TÜV Rheinland for compliance with SEMI S2 standard.) • SEMATECH Application Guide for SEMI S2-93, 12.4. compliant. • A nameplate can be installed. • Available in white.

• Specify a color code in place of ∗. Blank: yellow (Munsell 2.5Y8/10 or equivalent), -W: white (Munsell N9.5)
• Material: polyamide (PA6), degree of protection: IP65 (IEC 60529)

SEMI EMO Switch Guards

SEMI S2 Compliant Switch Guards

Dimensions

All dimensions in mm.

XA9Z-KG1

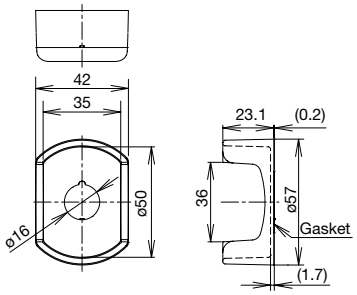

HW9Z-KG1

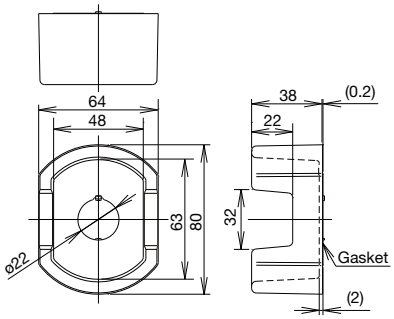

HW9Z-KG2

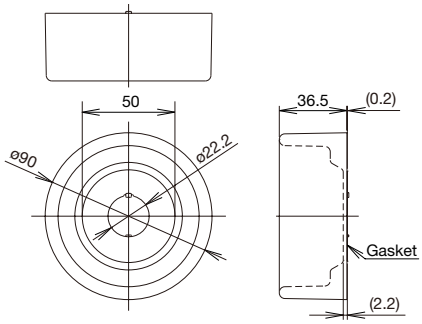

HW9Z-KG3

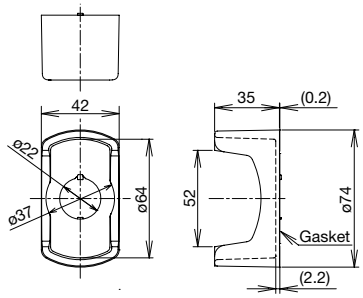

HW9Z-KG4

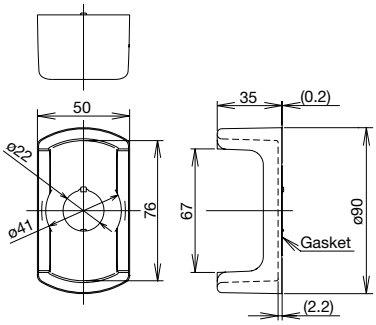

HW9Z-KG5

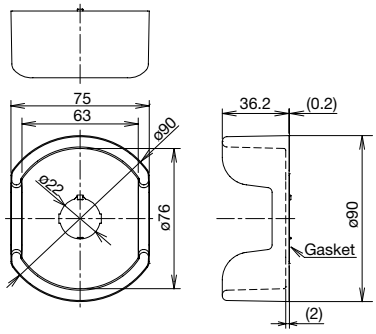

- Panel thickness: 1.2 to 4.0 mm
  (1.2 to 2.6 mm when using an HWAV nameplate)

Panel Cut-out

ø16mm

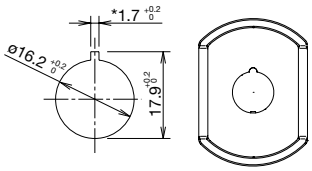

The * 1.7 $^{+0.2}_{0}$ recess is for preventing rotation and not necessary when anti-rotation is not used.

ø22mm

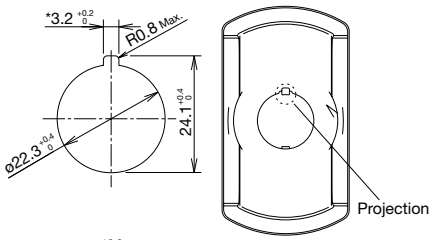

The * 3.2 $^{+0.2}_{0}$ recess is for preventing rotation and not necessary when anti-rotation is not used.

When anti-rotation is not required or when the panel cut-out does not have anti-rotation recess, remove the projection using pliers.

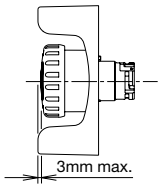

Note: The height of the applicable switch and guard will be 3 mm or less as shown in the diagram on the right.

Installation

ø16 mm

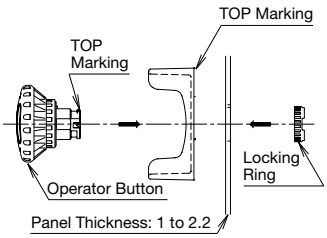

To tighten the locking ring, use locking ring wrench MT-100 and tighten to a torque of 0.88 N·m.

ø22 mm

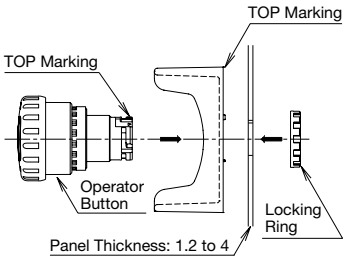

To tighten the locking ring, use locking ring wrench MW9Z-T1 and tighten to a torque of 2.0 N·m.

EMO Sticker

Part No.: HW9Z-EMO-NPP
Color: Yellow (red legend)
Package Quantity: 10

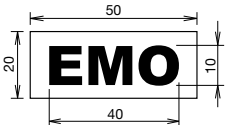

Nameplate (for ø22 mm Emergency Stop Switches)

Name	Legend	Part No.	Remarks
For ø40mm Mushroom	EMERGENCY OFF	**HWAV-74-Y**	• Nameplate color: yellow • Legend color: black 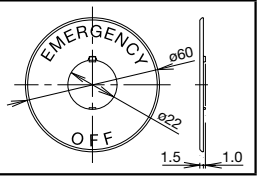

Stop Switches

Wider variety with yellow button, white guard and nameplate

According to SEMI S26-0308 Environmental, Health, and Safety Guideline for FPD Manufacturing Systems published in March 2008, the combination of a red button and yellow background cannot be used for switches that have only local or partial shut down functions. IDEC's yellow button switch, white switch guard, and nameplate can satisfy the requirement.

Stop Switches

ø16mm X6 series Stop Switch Pushlock Pull or Turn Reset Unibody (Solder Terminal)

Package quantity: 1

Description & Shape	Operator	NC Main Contact	Part No.
(Photo: ø30mm Mushroom)	ø30mm	1NC	AB6E-3BV01PY
		2NC	AB6E-3BV02PY
	ø40mm	1NC	AB6E-4BV01PY
		2NC	AB6E-4BV02PY

- Pushlock pull or turn reset is locked when pressed, and reset when pulled or turned clockwise.
- Do not use yellow stop switches as emergency stop switches.
- See page 8 for specifications and instructions.

ø16mm XA series Stop Switch Pushlock Pull or Turn Reset Unibody (Solder Terminal)

Package quantity: 1

Description & Shape	Operator	NC Main Terminal	Part No.	
			IP40	IP65
(Photo: ø29mm Mushroom)	ø29mm	1NC	XA1E-BV3U01K①	XA1E-BV3U01①
		2NC	XA1E-BV3U02K①	XA1E-BV3U02①
	ø40mm	1NC	XA1E-BV4U01K①	XA1E-BV4U01①
		2NC	XA1E-BV4U02K①	XA1E-BV4U02①

- Specify button color code Y (yellow) or N (gray) in place of ① in the Part No.
- Pushlock pull or turn reset is locked when pressed, and reset when pulled or turned clockwise.
- Solder/tab 110 terminal is available. To order, insert "T" before the Y in the Part No. Example: XA1E-BV3U02KY→XA1E-BV3U02KTY
- See page 13 for specifications and instructions.

ø16mm XA series Stop Switch Pushlock Pull or Turn Reset with Removable Contact Block

Package quantity: 1

Description & Shape	NC Main Contact	NO Monitor Contact	Part No.	
			Solder Terminal	PCB Terminal
ø29mm Mushroom	1NC	—	XA1E-BV301①	XA1E-BV301V①
	2NC	—	XA1E-BV302①	XA1E-BV302V①
	3NC	—	XA1E-BV303①	XA1E-BV303V①
	4NC	—	XA1E-BV304①	XA1E-BV304V①
	1NC	1NO	XA1E-BV311①	XA1E-BV311V①
	2NC	1NO	XA1E-BV312①	XA1E-BV312V①
	3NC	1NO	XA1E-BV313①	XA1E-BV313V①
ø40mm Mushroom	1NC	—	XA1E-BV401Y	XA1E-BV401VY
	2NC	—	XA1E-BV402Y	XA1E-BV402VY
	3NC	—	XA1E-BV403Y	XA1E-BV403VY
	4NC	—	XA1E-BV404Y	XA1E-BV404VY
	1NC	1NO	XA1E-BV411Y	XA1E-BV411VY
	2NC	1NO	XA1E-BV412Y	XA1E-BV412VY
	3NC	1NO	XA1E-BV413Y	XA1E-BV413VY

- Specify button color code Y (yellow) or N (gray) in place of ① in the Part No.
- Pushlock pull or turn reset is locked when pressed, and reset when pulled or turned clockwise.
- Terminal cover (XA9Z-VL2) is not supplied and must be ordered separately.
- See page 15 for specifications and instructions.

ø22mm XW series Stop Switches Pushlock Pull / Turn Reset (Screw Terminal)

Package quantity: 1

Description & Shape	Main Contact	Monitor Contact	Part No.	
			IP20 Terminal	w/Terminal Cover
ø40mm Mushroom	1NC	—	XW1E-BV401MFY	XW1E-BV401MY
	2NC	—	XW1E-BV402MFY	XW1E-BV402MY
	3NC	—	XW1E-BV403MFY	XW1E-BV403MY
	4NC	—	XW1E-BV404MFY	XW1E-BV404MY
	1NC	1NO	XW1E-BV411MFY	XW1E-BV411MY
	2NC	1NO	XW1E-BV412MFY	XW1E-BV412MY
	3NC	1NO	XW1E-BV413MFY	XW1E-BV413MY
	2NC	2NO	XW1E-BV422MFY	XW1E-BV422MY

- Pushlock, pull or turn reset is locked when pressed, and reset when pulled or turned clockwise.
- Specify IP20 terminal or terminal cover with the Part No.
- IP20 terminal type can be connected using solid wires only.
- See page 21 for specifications and instructions.

ø22mm HW series Stop Switches

Package quantity: 1

Description & Shape	Contact Configuration	Part No.		
		ø29mm Mushroom	ø40mm Mushroom	ø60mm Jumbo Mushroom
Pushlock Turn Reset (Photo: ø29mm Mushroom)	1NC	HW1B-V301Y	HW1B-V401Y	HW1B-V501Y
	1NO-1NC	HW1B-V311Y	HW1B-V411Y	HW1B-V511Y
	2NC	HW1B-V302Y	HW1B-V402Y	HW1B-V502Y
	2NO-2NC	HW1B-V322Y	HW1B-V422Y	HW1B-V522Y
Push-Pull ø40mm Mushroom (2-position)	1NC	—	HW1B-Y201Y	—
	1NO-1NC	—	HW1B-Y211Y	—
	2NC	—	HW1B-Y202Y	—

- Pushlock turn reset is locked when pressed, and reset when turned clockwise.
- Push-pull is a 2-position switch which is maintained in both pressed and reset (pull) positions.
- See page 32 for specifications and instructions.

Stop Switches

Nameplates (White)

Shape	Description	Part No.	Material	Plate Color	Legend
For ø16mm Series	For ø29mm Mushroom	**HAAV-0-W**	Polyamide	White (Munsell N9.5)	Blank
	For ø49mm Mushroom	**HAAV4-0-W**			
For ø22mm Series	For ø40mm Mushroom	**HWAV-0-W**			
	For ø60mm Mushroom	**HWAV5-0-W**			

Dimensions

For ø16mm Series
(Nameplate for ø29mm Mushroom)

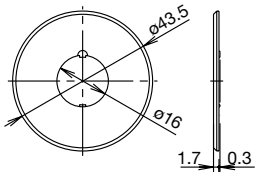

Panel thickness: 0.5 to 2 mm when using a nameplate

(Nameplate for ø40mm Mushroom)

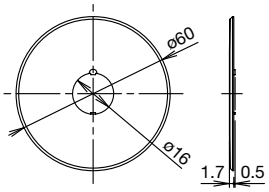

Panel thickness: 0.5 to 2 mm when using a nameplate

For ø22mm Series
(Nameplate for ø40mm Mushroom)

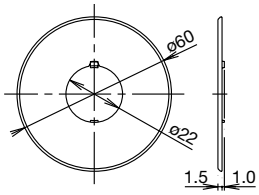

Panel thickness: 0.8 to 4.5 mm when using a nameplate

(Nameplate for ø60mm Mushroom)

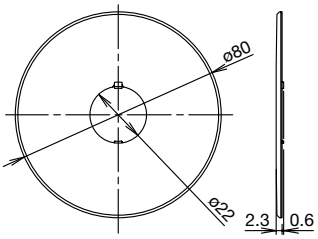

Panel thickness: 0.8 to 4 mm when using a nameplate

Switch Guard (White)

Description & Shape	Part No.	Remarks
For ø22mm HW/XW Series	**HW9Z-KG4-W**	• Inside diameter ø76mm • Space-saving, 50 mm-wide.
For ø22mm HW/XW Series	**HW9Z-KG5-W**	• Inside diameter ø76mm

IDEC CORPORATION

www.idec.com

Head Office
6-64, Nishi-Miyahara-2-Chome, Yodogawa-ku, Osaka 532-0004, Japan

USA	IDEC Corporation	Tel: +1-408-747-0550	opencontact@idec.com	**Hong Kong**	IDEC Izumi (H.K.) Co., Ltd.	Tel: +852-2803-8989	info@hk.idec.com
Germany	IDEC Elekrotechnik GmbH	Tel: +49-40-25 30 54 - 0	service@eu.idec.com	**China/Shanghai**	IDEC (Shanghai) Corporation	Tel: +86-21-6135-1515	idec@cn.idec.com
Singapore	IDEC Izumi Asia Pte. Ltd.	Tel: +65-6746-1155	info@sg.idec.com	**China/Shenzhen**	IDEC (Shenzhen) Corporation	Tel: +86-755-8356-2977	idec@cn.idec.com
Thailand	IDEC Asia (Thailand) Co., Ltd	Tel: +66-2-392-9765	sales@th.idec.com	**China/Beijing**	IDEC (Beijing) Corporation	Tel: +86-10-6581-6131	idec@cn.idec.com
Australia	IDEC Australia Pty. Ltd.	Tel: +61-3-8523-5900	sales@au.idec.com	**Japan**	IDEC Corporation	Tel: +81-6-6398-2527	marketing@idec.co.jp
Taiwan	IDEC Taiwan Corporation	Tel: +886-2-2698-3929	service@tw.idec.com				

Specifications and other descriptions in this brochure are subject to change without notice.
2017 IDEC Corporation, All Rights Reserved.

EP1430-14 JULY 2017 PRINTED IN GERMANY