Order Number
63811-6500

molex

Application Tooling Specification

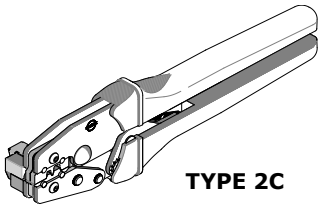

FEATURES

- A full cycle ratcheting hand tool ensures complete crimps
- Ergonomically designed soft handles
- Precisely designed crimping profiles with simple contact positioning
- Easy handling due to outstanding force ratio
- Tool kits are easily installed into the Hand Crimp Tool or the 63816-0300 Power Crimp Head, which is installed into the 63816-0270 (110 V) or 63816-0280 (220 V) Battery Powered Tool
- Many different tool kits can be used with a single battery powered tool
- This tool is IPC/WHMA-A-620 Class 2 and RoHS compliant

SCOPE

Products: SPOX Crimp Terminals, 18-24 AWG.

Terminal Series No.	Terminal Order No.				Wire Size		♦Insulation Diameter		Strip Length	
	Loose Piece		✳Reel		AWG	mm²	mm	In.	mm	In.
5194	08-70-1030	39-00-0022	08-70-1031	39-00-0409	18-24	0.80-0.20	1.30-3.00	.051-.118	3.00-3.50	.118-.138
			39-00-0021	39-00-0416						
✳Customer to cut off terminal from reel: 0.40mm (.016”) maximum cut-off tab. ♦See Conditions on page 2.										

DEFINITION OF TERMS

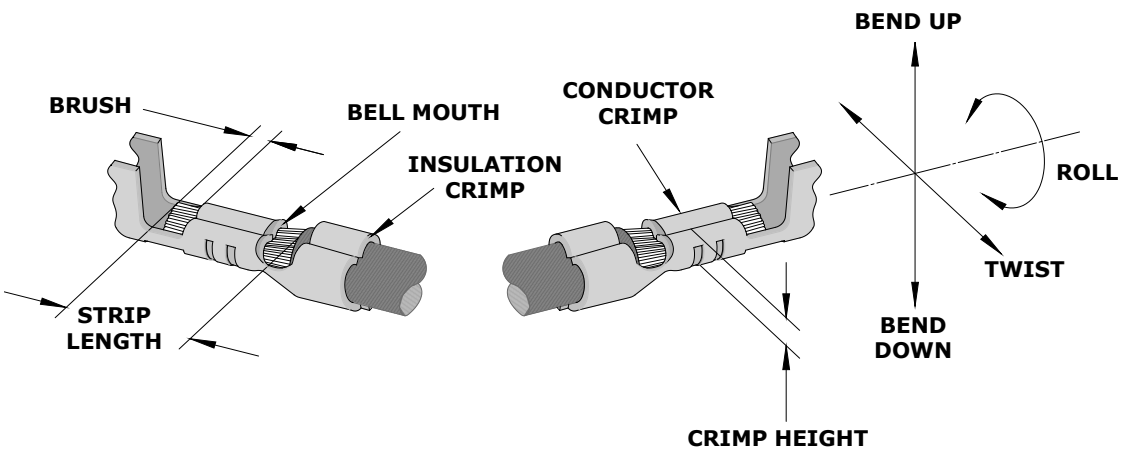

The above terminal drawing is a generic terminal representation. It is not an image of a terminal listed in the scope.

sales@prom-elec.com / ООО ПРОМЭЛЕКТРОНИКА

▲Insulation Crimp Note

Because of the terminal's insulation grip design or insulation diameter range, this tool uses overlap form geometry in the insulation punch. This produces an overlap insulation crimp (A-620-compliant). Although the insulation punch profile may appear lopsided, this is a normal condition for this tool. See figure to the right. Some tools with multiple crimp pockets may not have the overlap profile on all pockets.

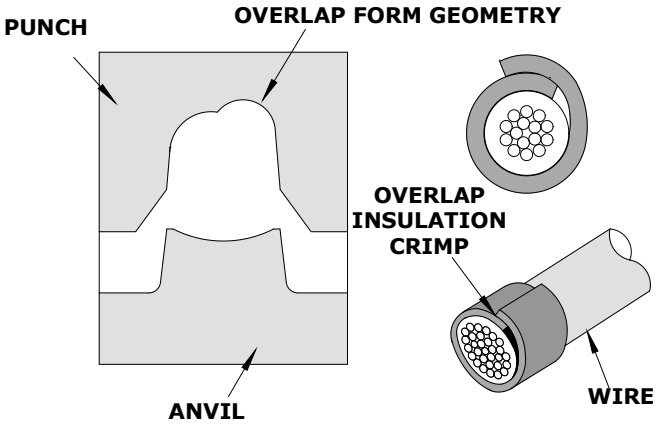

CONDITIONS

After crimping, the conductor profiles should measure the following (see notes below):

Terminal Series No	Wire Size		Conductor Crimp				Insulation Crimp				Pull Force Minimum		Profile	
			Height (Ref.)		Width (Ref.)		Height (Ref.)		Width (Ref.)					
	AWG	mm²	mm	In.	mm	In.	mm	In.	mm	In.	N	Lb.	A	B
5194	18	0.80	1.16-1.26	.046-.050	1.70	.067	2.90	.114	2.70	.106	89.0	20.00	X	
	20	0.50	0.97-1.07	.038-.042	1.70	.067	2.14	.084	2.70	.106	57.8	13.00		X
	22	0.35	0.97-1.07	.038-.042	1.70	.067	2.09	.082	2.70	.106	40.0	9.00		X
	24	0.20	0.97-1.07	.038-.042	1.70	.067	2.07	.081	2.70	.106	28.5	6.40		X
To achieve IPC/WHMA-A-620 Class 2 crimps, the following overall wire insulation diameter ranges are recommended: **Profile A:** 2.00-3.00mm (.079-.118") **Profile B:** 1.30-2.50mm (.051-.098")														

Tool Qualification Notes

1. Pull force should be measured with no influence from the insulation crimp.
2. The above specifications are guidelines to an optimum crimp.

Note

A crimp height chart is provided with this manual as reference only. Due to the wide range of wires, strands, insulation diameters and durometers, actual crimp height measurements may very slightly. An occasional destructive pull force test should be performed to check hand tool crimp. Pull force value must exceed the minimum pull force specifications listed on this page.

CAUTION: Install only Molex terminals listed above with this tool. Do not crimp hardened objects as damage can occur to the tool or die.

PUNCH AND ANVIL INSTALLATION

To install the tool kit into the power crimp head, follow the steps below:

1. Insert the anvils into the bottom slots of the nest. Install the M4 x 10 long BHCS and tighten in place.

2. Insert the punches into the top slots of the nest. Install the M4 x 18 long BHCS and tighten in place. See Figure 1.

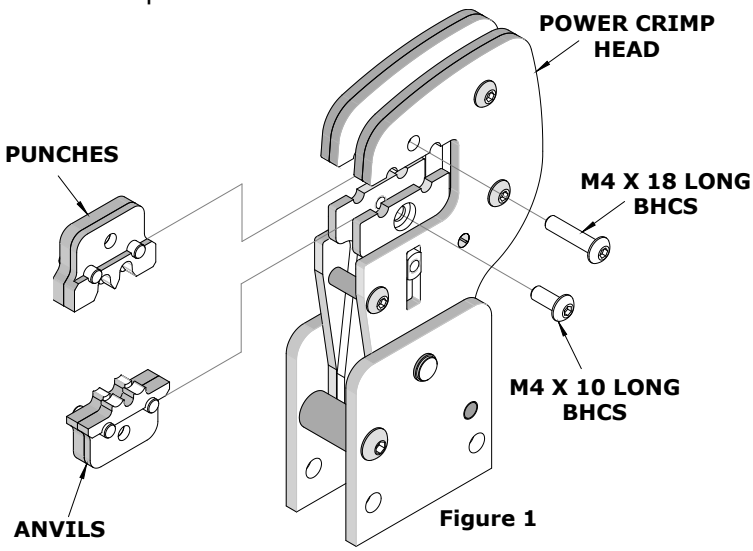

Figure 1

LOCATOR INSTALLATION AND REMOVAL

Follow the steps below to install or replace the locator. See Figure 2:

Locator Installation

1. Position the locator with the hole over the brass pivot shaft and snap it into place.

Locator Removal

1. Open the hand crimp tool.
2. Swing the existing locator open and away from the hand tool.
3. Firmly press down on the brass pivot shaft with your thumb, while pulling the locator up. Slip the locator off the top of the brass pivot shaft.

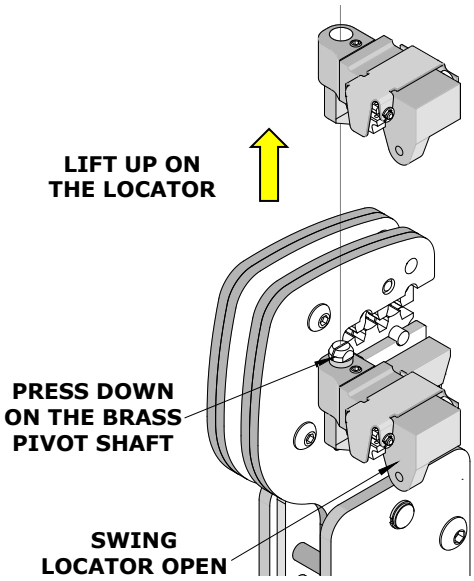

Figure 2

OPERATION

Open the tool by squeezing the handles together. At the end of the closing stroke, the ratchet mechanism will release the handles, and the hand tool will spring open. See Figure 3.

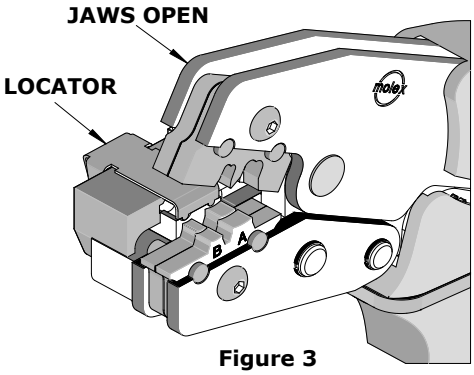

Figure 3

Crimping Terminals

1. Select the desired terminal listed in the preceding charts.

2. Swing the terminal locator away from the crimp tool as shown in Figure 4. Some terminals with large insulation grips may interfere with the crimp tooling when swinging the locator into position. The terminal must then be loaded into the locator in the closed/crimp position.

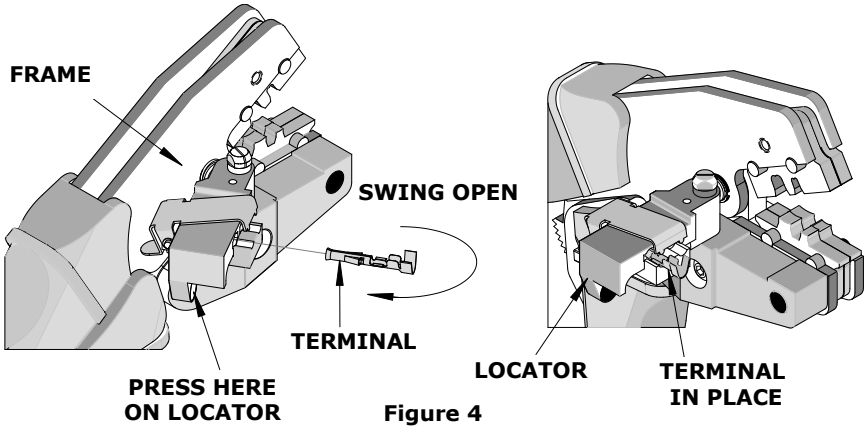

Figure 4

3. When using the locator, press down on the wire stop on the locator as shown in Figure 4. Insert the proper terminal into the proper nest opening. Make sure when choosing the nest opening, it will correspond with the A or B profile on the hand tool.

4. Return the locator to its original position.

5. Insert the proper wire over the terminal. Some large O.D. wires may need to be placed into the terminal before closing the tool. Gently touch the wire stop with the end of the wire. See Figure 5.

6. Compress the terminal by squeezing the tool handles until the ratchet mechanism cycle has been completed. Release handles to open the jaws.

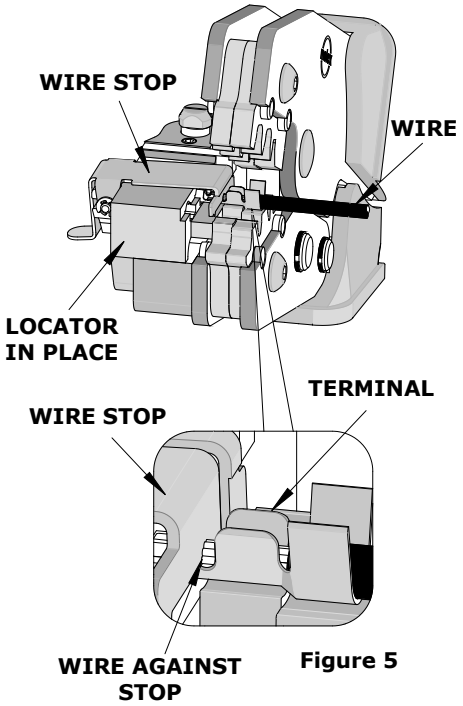

Figure 5

Note: The tamper-proof ratchet action will not release the tool until it has been fully closed.

7. Remove the crimped terminal from the terminal locator by pressing down on the wire stop and gently pulling on the wire. The terminal locator can be in either position.

8. Visually inspect the crimped terminal for proper crimp location.

LOCATOR REPLACEMENT

See the parts list on the last page of this document for the proper locator order number. Follow the steps below to replace the locator:

1. Open the hand crimp tool.
2. Swing the existing locator open and away from the hand tool.
3. Firmly press down on the brass pivot shaft with your thumb while pulling up on the locator. Slip the locator off the top of the brass pivot shaft. See Figure 6.
4. Replace it with the proper locator by putting over the brass pivot shaft and snapping it into place.

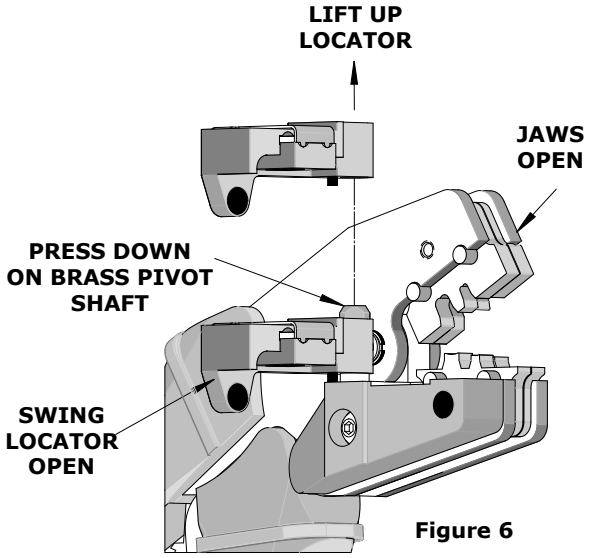

Figure 6

For the Battery Powered Tool

1. Cycle the battery powered tool to crimp the terminal to the wire.
2. Remove the crimped terminal from the terminal locator by pressing down on the wire stop and gently pulling on the wire. The terminal locator can be in either position.
3. Visually inspect the crimped terminal for proper crimp location.

MAINTENANCE

It is recommended that each operator of the tool be made aware of and responsible for the following maintenance steps:

1. Remove dust, moisture and other contaminants with a clean brush or a soft, lint-free cloth.
2. Do not use any abrasive materials that could damage the tool.
3. Make certain all pins, pivot points and bearing surfaces are protected with a thin coat of high-quality machine oil. Do not oil excessively. The tool was engineered for durability, but like any fine piece of equipment, it needs cleaning and lubrication for a maximum service life of trouble-free crimping. A 30-weight automotive (light) oil used at the oil points every 5,000 crimps or every 3 months will significantly enhance the tool life. See Figures 7A and 7B.

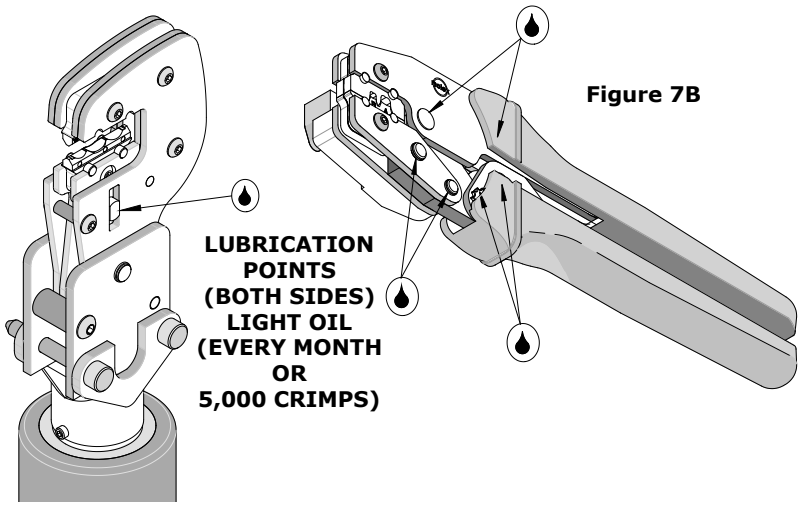

Figure 7A

Figure 7B

4. Wipe excess oil from the hand tool, particularly from the crimping area. Oil transferred from the crimping area onto certain terminations may affect the electrical characteristics of an application.
5. When the tool is not in use, keep the handles closed to prevent objects from becoming lodged in the crimping dies, and store the tool in a clean, dry area.

Miscrimps or Jams

Should this tool ever become stuck or jammed in a partially closed position, **do not** force the handles open or closed. The tool will open easily by pressing the ratchet release lever. See Figure 8.

How to Adjust Tool Preload

This hand tool is factory preset to 25-45 pounds. preload. It may be necessary over the life of the tool to adjust tool handle preload force. Listed below are the steps required to adjust the crimping force of the hand tool to obtain proper crimp conditions (See Figure 8):

1. Remove or fold back the handle grip from the handle to expose the eccentric axle and setting wheel.
2. Remove the locking screw with a 2mm hex wrench. The wrench set (63810-0101), is not supplied. It is sold separately from the hand tool.
3. Turn the eccentric axle and setting wheel with the wrench or pliers counterclockwise (CCW) to increase handle force.
4. Replace the locking screw, aligning the nearest notch in the setting wheel to locking screw.
5. Replace the handle grip.
6. Check the crimp specifications or conduct a pull test after tool handle preload force is adjusted.

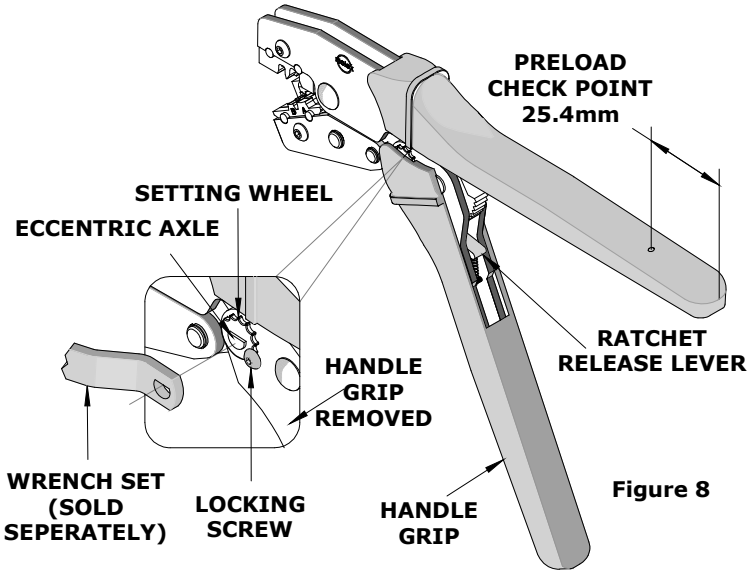

Figure 8

Warranty

This tool is for electrical terminal crimping purposes only. This tool is made of the best quality materials. All vital components are long-life tested. All tools are warranted to be free of manufacturing defects for a period of 30 days. Should such a defect occur, Molex will repair or exchange the tool free of charge. This repair or exchange will not be applicable to altered, misused or damaged tools. This tool is designed for hand use only. Any clamping, fixturing or use of handle extensions voids this warranty.

CAUTION: Repetitive use of this tool should be avoided.

CAUTIONS

1. Manually powered hand tools are intended for low-volume use or field repair. This tool is NOT intended for production use. Repetitive use of this tool should be avoided.
2. Insulated rubber handles are not protection against electrical shock.
3. Wear eye protection at all times.
4. Use only the Molex terminals specified for crimping with this tool.

CAUTION: Molex crimp specifications are valid only when used with Molex terminals and tooling.

Certification

Molex does not certify or re-certify commercial grade hand tools but rather supplies the following guidelines for customers to re-certify hand tools:

- This tool is qualified to pull force only. To re-certify, crimp a terminal to a wire that has been stripped 12.7mm (.50”) long, so there is no crimping of the insulation. Pull the terminal and wire at a rate no faster than 25mm (1.00”) per minute. See the Molex website for the Quality Crimp Handbook for more information on pull testing.
- If the tool does not meet minimum pull force values, handle preload should be increased and the pull test rerun. (See How to Adjust Preload).
- When the hand tool is no longer capable of achieving minimum pull force, it should be taken out of service and replaced.

The chart below shows all applications for this tool kit:

Tool Order No.	Tool Description	Power Head Order No.	Adapter Description	Figure No.
63810-0100	Hand Crimp Frame (Short)	—	—	9
63810-0400	Hand Crimp Frame (Long)	—	—	9
63816-0270	Battery Power Tool (110 V)	63816-0300	Power Crimp Head	10
63816-0280	Battery Power Tool (220 V)	63816-0300	Power Crimp Head	10

Applications for the Tool Kit

Hand Crimp Tool	Battery Powered Tool
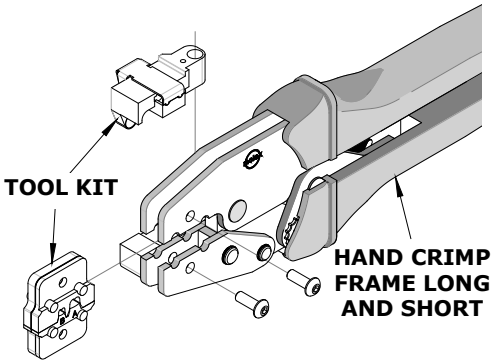	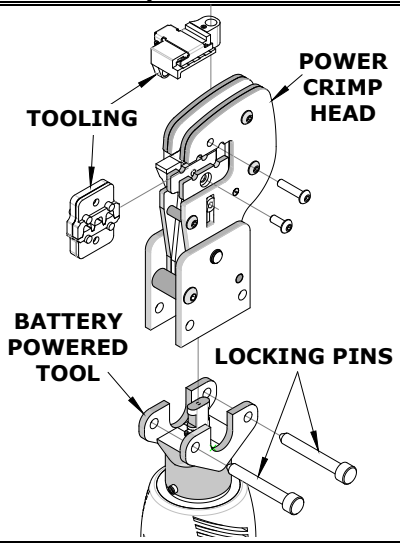
Figure 9	**Figure 10**

WARNING: *NEVER* operate, service, install tool kits or adjust the power crimp head without proper instruction and without first reading and understanding the instructions in the proper manual or specification sheet. See chart above for the correct manual or specification sheet.

WARNING: *NEVER* install tooling or service this tool while it is connected to any power source. Make sure the power is turned off.

CAUTION: Keep fingers away from the crimping area when operating this tool. It may cause severe injury.

CAUTION: Wear safety glasses when operating or servicing this tool.

HAND TOOL PARTS LIST

Item Number	Order Number	Description	Quantity
1	63810-0100	Hand Crimp Frame (Short)	1
2	63810-0101	Wrench Set (Not Included)	0
3	63810-0102	Locator Base	1
4	63810-0103	Repair Kit (Not Included)	0
5	63811-6570	Tool Kit with Locator	1
6	63811-6575	Locator (Only)	REF

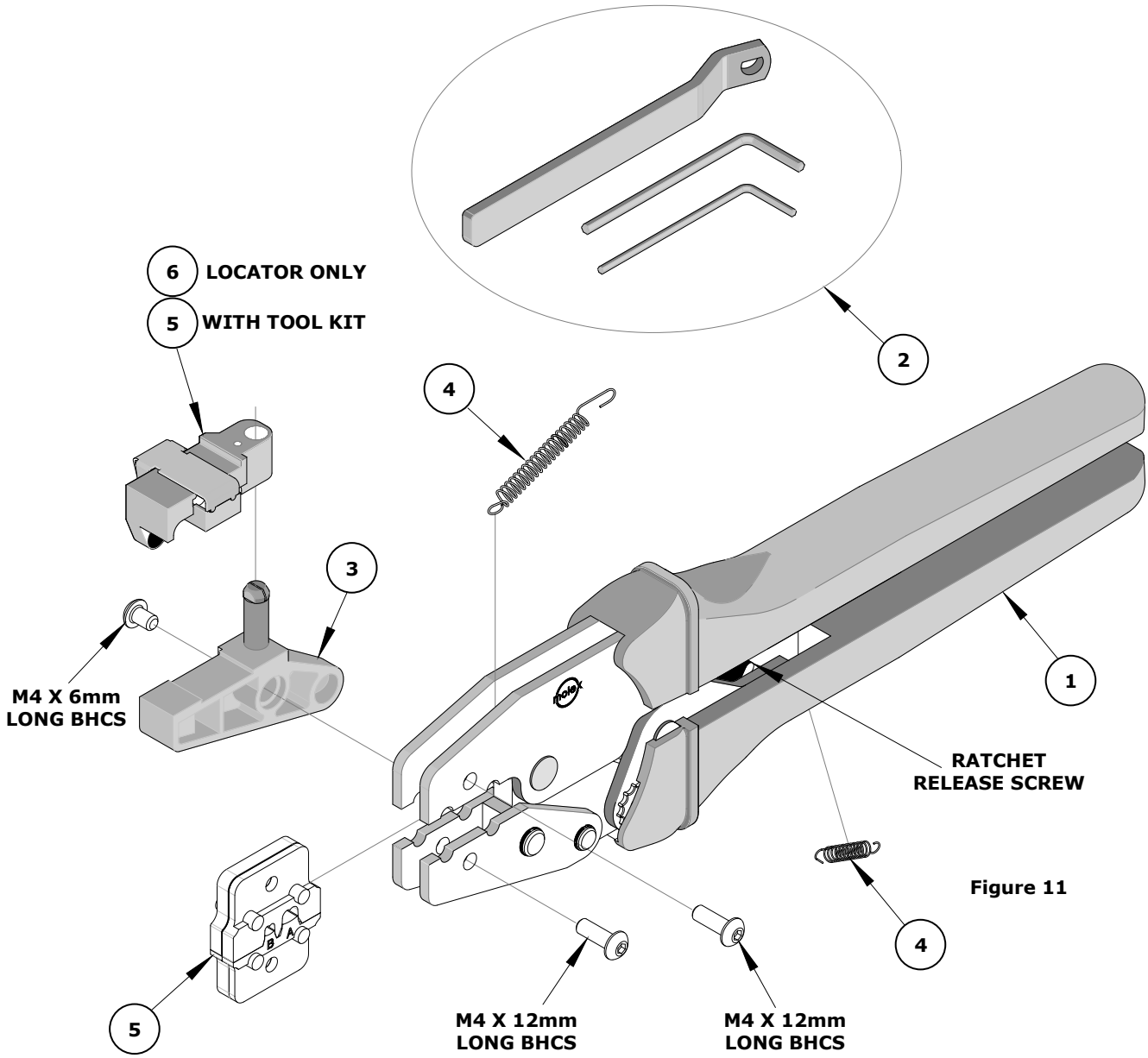

Figure 11

POWER HEAD PARTS LIST

Item	Order No.	Engineering No.	Description	Quantity
1	63816-0300	63816-0300	Power Crimp Head	1
2	63811-6570	63811-6570	Tool Kit	1

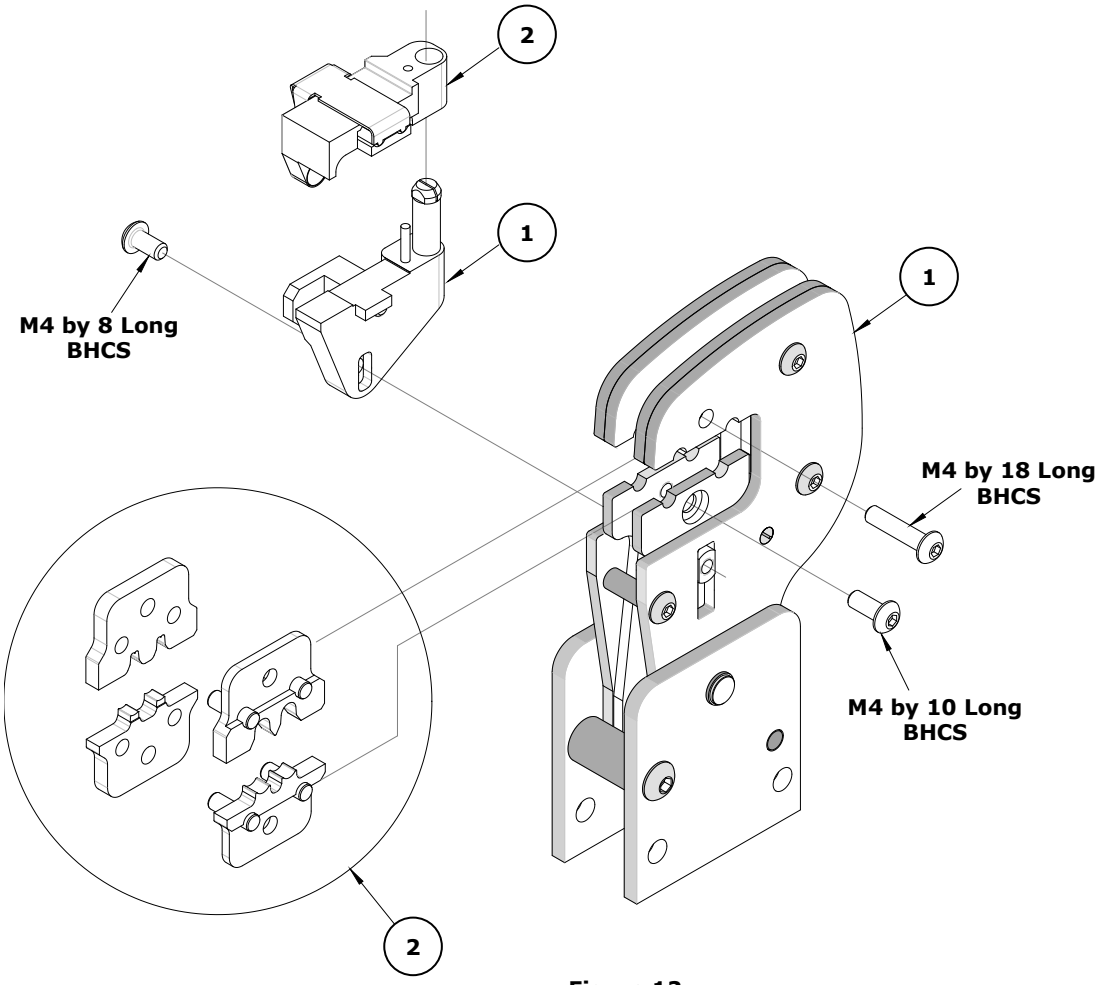

Figure 12

Application Tooling Support

Phone: (402) 458-TOOL (8665)
E-Mail: applicationtooling@molex.com
Website: www.molex.com/applicationtooling

Molex is a registered trademark of Molex, LLC in the United States of America and may be registered in other countries; all other trademarks listed herein belong to their respective owners.