# TSV63x, TSV63xA

## Dual and quad, rail-to-rail input/output, 60 µA, 880 kHz operational amplifiers

Datasheet - production data

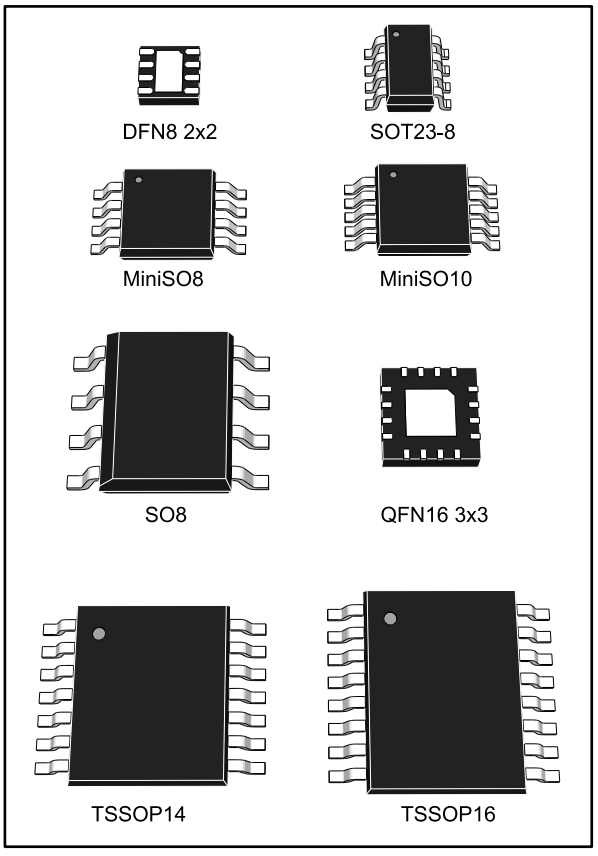


## Features

- Rail-to-rail input and output
- Low power consumption: 60 µA typ at 5 V
- Low supply voltage: 1.5 V - 5.5 V
- Gain bandwidth product: 880 kHz typ
- Unity gain stable on 100 pF capacitor
- Low power shutdown mode: 5 nA typ
- Low offset voltage: 800 µV max (A version)
- Low input bias current: 1 pA typ
- EMI hardened op amps
- Automotive qualification

## Related products

- See the TSV52x series for higher merit factor (1.15 MHz for 45 µA)
- See the TSV61x (120 kHz for 9 µA) or TSV62x (420 kHz for 29 µA) for more power savings

## Applications

- Battery-powered applications
- Portable devices
- Signal conditioning
- Active filtering
- Medical instrumentation

## Description

The TSV63x and TSV63xA series of dual and quad operational amplifiers offers low voltage operation and rail-to-rail input and output.

This family features an excellent speed/power consumption ratio, offering an 880 kHz gain-bandwidth product while consuming only 60 µA at 5 V supply voltage. The devices also feature an ultralow input bias current and TSV633 and TSV635 have a shutdown mode.

These features make the TSV63x and TSV63xA family ideal for sensor interfaces, battery-supplied and portable applications, and active filtering.

**Table 1: Device summary**

| Reference | Dual version | | Quad version | |
|---|---|---|---|---|
| | Without standby | With standby | Without standby | With standby |
| TSV63x | TSV632 | TSV633 | TSV634 | TSV635 |
| TSV63xA | TSV632A | TSV633A | TSV634A | TSV635A |



This is information on a product in full production. www.st.com

sales@prom-elec.com / ООО ПРОМЭЛЕКТРОНИКА

# Contents


**1 Package pin connections ... 3**

**2 Absolute maximum ratings and operating conditions ... 4**

**3 Electrical characteristics ... 6**

**4 Application information ... 14**

4.1 Operating voltages ... 14

4.2 Rail-to-rail input ... 14

4.3 Rail-to-rail output ... 14

4.4 Shutdown function (TSV633, TSV635) ... 15

4.5 Optimization of DC and AC parameters ... 16

4.6 Driving resistive and capacitive loads ... 16

4.7 PCB layouts ... 16

4.8 Macromodel ... 17

**5 Package information ... 18**

5.1 DFN8 2 x 2 (NB) package information ... 19

5.2 SOT23-8 package information ... 21

5.3 MiniSO8 package information ... 22

5.4 MiniSO10 package information ... 23

5.5 SO8 package information ... 24

5.6 QFN16 3x3 package information ... 25

5.7 TSSOP14 package information ... 27

5.8 TSSOP16 package information ... 28

**6 Ordering information ... 29**

**7 Revision history ... 30**

# 1 Package pin connections

**Figure 1: Pin connections for each package (top view)**

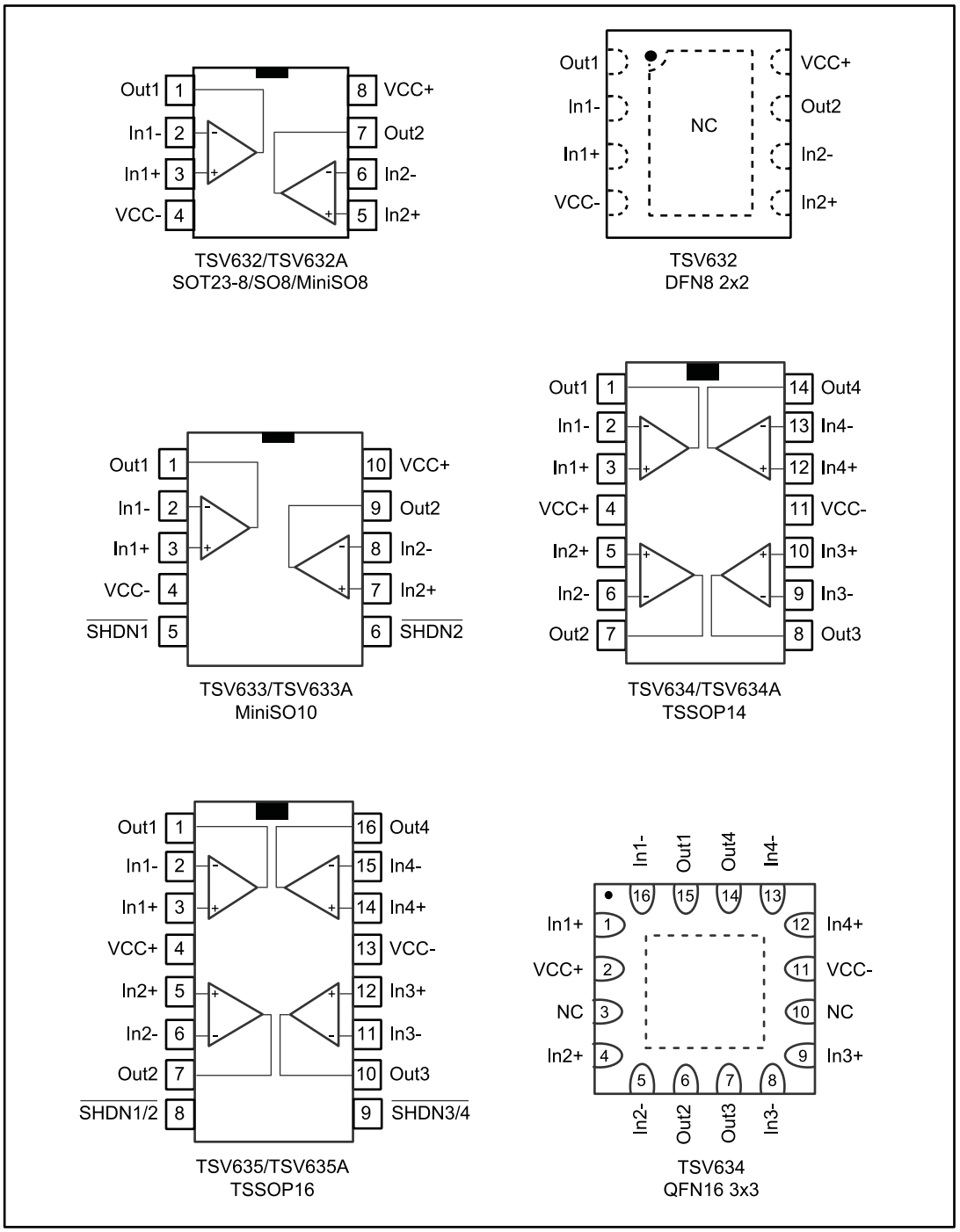


1. The exposed pads of the DFN8 2x2 and the QFN16 3x3 can be connected to $V_{CC-}$ or left floating.

# 2 Absolute maximum ratings and operating conditions

**Table 2: Absolute maximum ratings (AMR)**

| Symbol | Parameter | | Value | Unit |
|---|---|---|---|---|
| $V_{CC}$ | Supply voltage [(1)] | | 6 | V |
| $V_{id}$ | Differential input voltage [(2)] | | $\pm V_{CC}$ | |
| $V_{in}$ | Input voltage [(3)] | | $(V_{CC-}) - 0.2$ to $(V_{CC+}) + 0.2$ | |
| $I_{in}$ | Input current [(4)] | | 10 | mA |
| $\overline{SHDN}$ SHDN | Shutdown voltage [(3)] | | $(V_{CC-}) - 0.2$ to $(V_{CC+}) + 0.2$ | V |
| $T_{stg}$ | Storage temperature | | -65 to 150 | °C |
| $R_{thja}$ | Thermal resistance junction to ambient [(5)(6)] | DFN8 2x2 | 57 | °C/W |
| | | SOT23-8 | 105 | |
| | | MiniSO8 | 190 | |
| | | MiniSO10 | 113 | |
| | | SO8 | 125 | |
| | | QFN16 3x3 | 39 | |
| | | TSSOP14 | 100 | |
| | | TSSOP16 | 95 | |
| $T_j$ | Maximum junction temperature | | 150 | °C |
| ESD | HBM: human body model [(7)] | | 4000 | V |
| | MM: machine model [(8)] | | 300 | |
| | CDM: charged device model [(9)] | | 1500 | |
| | Latch-up immunity | | 200 | mA |

**Notes:**

(1)All voltage values, except the differential voltage are with respect to the network ground terminal.

(2)Differential voltages are the non-inverting input terminal with respect to the inverting input terminal.

(3)$V_{CC}$ - $V_{IN}$ must not exceed 6 V, $V_{IN}$ must not exceed 6 V.

(4)Input current must be limited by a resistor in series with the inputs

(5)$R_{th}$ are typical values

(6)Short-circuits can cause excessive heating and destructive dissipation

(7)Human body model: 100 pF discharged through a 1.5 kΩ resistor between two pins of the device, done for all couples of pin combinations with other pins floating.

(8)Machine model: a 200 pF cap is charged to the specified voltage, then discharged directly between two pins of the device with no external series resistor (internal resistor < 5 Ω), done for all couples of pin combinations with other pins floating

(9)Charged device model: all pins plus package are charged together to the specified voltage and then discharged directly to the ground.

**Table 3: Operating conditions**

| Symbol | Parameter | Value | Unit |
|---|---|---|---|
| $V_{CC}$ | Supply voltage | 1.5 to 5.5 | V |
| $V_{ICM}$ | Common-mode input voltage range | $(V_{CC-})$ - 0.1 to $(V_{CC+})$ + 0.1 | |
| $T_{oper}$ | Operating free-air temperature range | -40 to 125 | °C |

# 3 Electrical characteristics

**Table 4: Electrical characteristics at VCC+ = 1.8 V with VCC- = 0 V, Vicm = VCC/2, Tamb = 25° C, and RL connected to VCC/2 (unless otherwise specified)**

| Symbol | Parameter | Conditions | Min. | Typ. | Max. | Unit |
|---|---|---|---|---|---|---|
| **DC performance** | | | | | | |
| $V_{io}$ | Offset voltage | TSV63x | | | 3 | mV |
| | | TSV63xA | | | 0.8 | |
| | | TSV633AIST (MiniSO10) | | | 1 | |
| | | $T_{min} < T_{op} < T_{max}$ - TSV63x | | | 4.5 | |
| | | $T_{min} < T_{op} < T_{max}$ - TSV63xA | | | 2 | |
| | | $T_{min} < T_{op} < T_{max}$ - TSV633AIST | | | 2.2 | |
| $\Delta V_{io}/\Delta T$ | Input offset voltage drift | | | 2 | | µV/°C |
| $I_{io}$ | Input offset current | ($V_{out} = V_{CC}/2$) | | 1 | 10 (1) | pA |
| | | $T_{min} < T_{op} < T_{max}$ | | 1 | 100 | |
| $I_{ib}$ | Input bias current | ($V_{out} = V_{CC}/2$) | | 1 | 10 (1) | |
| | | $T_{min} < T_{op} < T_{max}$ | | 1 | 100 | |
| CMR | Common mode rejection ratio 20 log ($\Delta V_{ic}/\Delta V_{io}$) | 0 V to 1.8 V, $V_{out}$ = 0.9 V | 53 | 74 | | dB |
| | | $T_{min} < T_{op} < T_{max}$ | 51 | | | |
| $A_{vd}$ | Large signal voltage gain | $R_L$= 10 kΩ, $V_{out}$ = 0.5 V to 1.3 V | 85 | 95 | | |
| | | $T_{min} < T_{op} < T_{max}$ | 80 | | | |
| $V_{OH}$ | High level output voltage, ($V_{OH} = V_{CC} - V_{out}$) | $R_L$ = 10 kΩ | | 5 | 35 | mV |
| | | $T_{min} < T_{op} < T_{max}$ | | | 50 | |
| $V_{OL}$ | Low level output voltage | $R_L$ = 10 kΩ | | 4 | 35 | |
| | | $T_{min} < T_{op} < T_{max}$ | | | 50 | |
| $I_{out}$ | $I_{sink}$ | $V_o$ = 1.8 V | 6 | 12 | | mA |
| | | $T_{min} < T_{op} < T_{max}$ | 4 | | | |
| | $I_{source}$ | $V_o$ = 0 V | 6 | 10 | | |
| | | $T_{min} < T_{op} < T_{max}$ | 4 | | | |
| $I_{CC}$ | Supply current (per channel) | No load, $V_{out} = V_{CC}/2$ | 40 | 50 | 60 | µA |
| | | $T_{min} < T_{op} < T_{max}$ | | | 62 | |
| **AC performance** | | | | | | |
| GBP | Gain bandwidth product | $R_L$ = 2 kΩ, $C_L$ = 100 pF, f = 100 kHz | 700 | 790 | | kHz |
| ϕm | Phase margin | $R_L$ = 2 kΩ, $C_L$ = 100 pF | | 45 | | Degrees |
| $G_m$ | Gain margin | $R_L$ = 2 kΩ, $C_L$ = 100 pF | | 13 | | dB |
| SR | Slew rate | $R_L$ = 2 kΩ, $C_L$ = 100 pF, $A_v$ = 1 | 0.2 | 0.27 | | V/µs |
| $e_n$ | Equivalent input noise voltage | f = 1 kHz | | 60 | | nV/√Hz |
| | | f = 10 kHz | | 33 | | |

**Notes:**

(1)Guaranteed by design

**Table 5: Shutdown characteristics VCC = 1.8 V**

| Symbol | Parameter | Conditions | Min. | Typ. | Max. | Unit |
|---|---|---|---|---|---|---|
| **DC performance** | | | | | | |
| $I_{CC}$ | Supply current in shutdown mode (all channels) | $\overline{SHDN}$ = $V_{CC-}$ | | 2.5 | 50 | nA |
| | | $T_{min} < T_{op} < 85°$ C | | | 200 | |
| | | $T_{min} < T_{op} < 125°$ C | | | 1.5 | µA |
| $t_{on}$ | Amplifier turn-on time | $R_L$ = 2 kΩ, $V_{out}$ = ($V_{CC-}$) to ($V_{CC-}$) + 0.2 V | | 200 | | ns |
| $t_{off}$ | Amplifier turn-off time | $R_L$ = 2 kΩ, $V_{out}$ = ($V_{CC+}$) - 0.5 V to ($V_{CC+}$) - 0.7 V | | 20 | | |
| $V_{IH}$ | $\overline{SHDN}$ logic high | | 1.35 | | | V |
| $V_{IL}$ | $\overline{SHDN}$ logic low | | | | 0.6 | |
| $I_{IH}$ | $\overline{SHDN}$ current high | $\overline{SHDN}$ = $V_{CC+}$ | | 10 | | pA |
| $I_{IL}$ | $\overline{SHDN}$ current low | $\overline{SHDN}$ = $V_{CC-}$ | | 10 | | |
| $I_{OLeak}$ | Output leakage in shutdown mode | $\overline{SHDN}$ = $V_{CC-}$ | | 50 | | |
| | | $T_{min} < T_{op} < 125°$ C | | 1 | | nA |

**Table 6: VCC+ = 3.3 V, VCC- = 0 V, Vicm = VCC/2, Tamb = 25° C, RL connected to VCC/2 (unless otherwise specified)**

| Symbol | Parameter | Conditions | Min. | Typ. | Max. | Unit |
|---|---|---|---|---|---|---|
| **DC performance** | | | | | | |
| $V_{io}$ | Offset voltage | TSV63x | | | 3 | mV |
| | | TSV63xA | | | 0.8 | |
| | | TSV633AIST (MiniSO10) | | | 1 | |
| | | $T_{min} < T_{op} < T_{max}$ - TSV63x | | | 4.5 | |
| | | $T_{min} < T_{op} < T_{max}$ - TSV63xA | | | 2 | |
| | | $T_{min} < T_{op} < T_{max}$ - TSV633AIST | | | 2.2 | |
| $\Delta V_{io}/\Delta T$ | Input offset voltage drift | | | 2 | | µV/°C |
| $I_{io}$ | Input offset current | $V_{out} = V_{CC}/2$ | | 1 | 10 (1) | pA |
| | | $T_{min} < T_{op} < T_{max}$ | | 1 | 100 | |
| $I_{ib}$ | Input bias current | $V_{out} = V_{CC}/2$ | | 1 | 10 (1) | |
| | | $T_{min} < T_{op} < T_{max}$ | | 1 | 100 | |
| CMR | Common mode rejection ratio 20 log ($\Delta V_{ic}/\Delta V_{io}$) | 0 V to 3.3 V, $V_{out}$ = 1.65 V | 57 | 79 | | dB |
| | | $T_{min} < T_{op} < T_{max}$ | 53 | | | |
| $A_{vd}$ | Large signal voltage gain | $R_L$ = 10 kΩ, $V_{out}$ = 0.5 V to 2.8 V | 88 | 98 | | |
| | | $T_{min} < T_{op} < T_{max}$ | 83 | | | |
| $V_{OH}$ | High level output voltage, ($V_{OH} = V_{CC} - V_{out}$) | $R_L$ = 10 kΩ | | 5 | 35 | mV |
| | | $T_{min} < T_{op} < T_{max}$ | | | 50 | |
| $V_{OL}$ | Low level output voltage | $R_L$ = 10 kΩ | | 4 | 35 | |
| | | $T_{min} < T_{op} < T_{max}$ | | | 50 | |
| $I_{out}$ | $I_{sink}$ | $V_o$ = 3.3 V | 23 | 45 | | mA |
| | | $T_{min} < T_{op} < T_{max}$ | 20 | | | |
| | $I_{source}$ | $V_o$ = 0 V | 23 | 38 | | |
| | | $T_{min} < T_{op} < T_{max}$ | 20 | | | |
| $I_{CC}$ | Supply current, (per channel) | No load, $V_{out}$ = 1.75 V | 43 | 55 | 64 | µA |
| | | $T_{min} < T_{op} < T_{max}$ | | | 66 | |
| **AC performance** | | | | | | |
| GBP | Gain bandwidth product | $R_L$ = 2 kΩ, $C_L$ = 100 pF, f = 100 kHz | 710 | 860 | | kHz |
| ϕm | Phase margin | $R_L$ = 2 kΩ, $C_L$ = 100 pF | | 46 | | Degrees |
| $G_m$ | Gain margin | $R_L$ = 2 kΩ, $C_L$ = 100 pF | | 13 | | dB |
| SR | Slew rate | $R_L$ = 2 kΩ, $C_L$ = 100 pF, $A_V$ = 1 | 0.22 | 0.29 | | V/µs |

**Notes:**

(1)Guaranteed by design

**Table 7: Electrical characteristics at VCC+ = 5 V with VCC- = 0 V, Vicm = VCC/2, Tamb = 25° C, and RL connected to VCC/2 (unless otherwise specified)**

| Symbol | Parameter | Conditions | Min. | Typ. | Max. | Unit |
|---|---|---|---|---|---|---|
| **DC performance** | | | | | | |
| $V_{io}$ | Offset voltages | TSV63x | | | 3 | mV |
| | | TSV63xA | | | 0.8 | |
| | | TSV633AIST ( MiniSO10) | | | 1 | |
| | | $T_{min} < T_{op} < T_{max}$ - TSV63x | | | 4.5 | |
| | | $T_{min} < T_{op} < T_{max}$ - TSV63xA | | | 2 | |
| | | $T_{min} < T_{op} < T_{max}$ - TSV633AIST | | | 2.2 | |
| $\Delta V_{io}/\Delta T$ | Input offset voltage drift | | | 2 | | µV/°C |
| $I_{io}$ | Input offset current | ($V_{out} = V_{CC}/2$) | | 1 | 10 (1) | pA |
| | | $T_{min} < T_{op} < T_{max}$ | | 1 | 100 | |
| $I_{ib}$ | Input bias current | ($V_{out} = V_{CC}/2$) | | 1 | 10 (1) | |
| | | $T_{min} < T_{op} < T_{max}$ | | 1 | 100 | |
| CMR | Common mode rejection ratio 20 log ($\Delta V_{ic}/\Delta V_{io}$) | 0 V to 5 V, $V_{out}$ = 2.5 V | 60 | 80 | | dB |
| | | $T_{min} < T_{op} < T_{max}$ | 55 | | | |
| SVR | Supply voltage rejection ratio 20 log ($\Delta V_{CC}/\Delta V_{io}$) | $V_{CC}$ = 1.8 to 5 V | 75 | 102 | | |
| | | $T_{min} < T_{op} < T_{max}$ | 73 | | | |
| $A_{vd}$ | Large signal voltage gain | $R_L$ = 10 kΩ, $V_{out}$ = 0.5 V to 4.5 V | 89 | 98 | | |
| | | $T_{min} < T_{op} < T_{max}$ | 84 | | | |
| EMIRR | EMI rejection ratio, EMIRR = -20 log ($V_{RFpeak}/\Delta V_{io}$) | $V_{RF}$ = 100 $mV_{rms}$, f = 400 MHz | | 61 | | |
| | | $V_{RF}$ = 100 $mV_{rms}$, f = 900 MHz | | 85 | | |
| | | $V_{RF}$ = 100 $mV_{rms}$, f = 1800 MHz | | 92 | | |
| | | $V_{RF}$ = 100 $mV_{rms}$, f = 2400 MHz | | 83 | | |
| $V_{OH}$ | High level output voltage, ($V_{OH} = V_{CC} - V_{out}$) | $R_L$ = 10 kΩ | | 7 | 35 | mV |
| | | $T_{min} < T_{op} < T_{max}$ | | | 50 | |
| $V_{OL}$ | Low level output voltage | $R_L$ = 10 kΩ | | 6 | 35 | |
| | | $T_{min} < T_{op} < T_{max}$ | | | 50 | |
| $I_{out}$ | $I_{sink}$ | $V_o$ = 5 V | 40 | 69 | | mA |
| | | $T_{min} < T_{op} < T_{max}$ | 35 | | | |
| | $I_{source}$ | $V_o$ = 0 V | 40 | 74 | | |
| | | $T_{min} < T_{op} < T_{max}$ | 35 | | | |
| $I_{CC}$ | Supply current, (per channel) | No load, $V_{out} = V_{CC}/2$ | 50 | 60 | 69 | µA |
| | | $T_{min} < T_{op} < T_{max}$ | | | 72 | |
| **AC performance** | | | | | | |
| GBP | Gain bandwidth product | $R_L$ = 2 kΩ, $C_L$ = 100 pF, f = 100 kHz | 730 | 880 | | kHz |
| $F_u$ | Unity gain frequency | $R_L$ = 2 kΩ, $C_L$ = 100 pF | | 830 | | |
| ϕm | Phase margin | $R_L$ = 2 kΩ, $C_L$ = 100 pF | | 48 | | Degrees |

| Symbol | Parameter | Conditions | Min. | Typ. | Max. | Unit |
|---|---|---|---|---|---|---|
| $G_m$ | Gain margin | $R_L$ = 2 kΩ, $C_L$ = 100 pF | | 13 | | dB |
| SR | Slew rate | $R_L$ = 2 kΩ, $C_L$ = 100 pF, $A_v$ =1 | 0.25 | 0.34 | | V/µs |
| $e_n$ | Equivalent input noise voltage | f = 1 kHz | | 60 | | nV/√Hz |
| | | f = 10 kHz | | 33 | | |
| THD+$e_n$ | Total harmonic distortion + noise | $V_{CC}$ = 5V, f = 1 kHz, $A_v$ = 1, $R_L$ = 100 kΩ, $V_{icm}$ = $V_{CC}$/2, $V_{out}$ = 2Vpp | | 0.002 | | % |

**Notes:**

(1)Guaranteed by design

**Table 8: Shutdown characteristics at VCC = 5 V**

| Symbol | Parameter | Conditions | Min. | Typ. | Max. | Unit |
|---|---|---|---|---|---|---|
| **DC performance** | | | | | | |
| $I_{CC}$ | Supply current in shutdown mode (all channels) | $\overline{SHDN}$ = $V_{CC-}$ | | 5 | 50 | nA |
| | | $T_{min}$ < $T_{op}$ < 85° C | | | 200 | |
| | | $T_{min}$ < $T_{op}$ < 125° C | | | 1.5 | µA |
| $t_{on}$ | Amplifier turn-on time | $R_L$ = 2 kΩ, $V_{out}$ = ($V_{CC-}$) to ($V_{CC-}$) + 0.2 V | | 200 | | ns |
| $t_{off}$ | Amplifier turn-off time | $R_L$ = 2 kΩ, $V_{out}$ = ($V_{CC+}$) - 0.5 V to ($V_{CC+}$) - 0.7 V | | 20 | | |
| $V_{IH}$ | $\overline{SHDN}$ logic high | | 2 | | | V |
| $V_{IL}$ | $\overline{SHDN}$ logic low | | | | 0.8 | |
| $I_{IH}$ | $\overline{SHDN}$ current high | $\overline{SHDN}$ = $V_{CC+}$ | | 10 | | pA |
| $I_{IL}$ | $\overline{SHDN}$ current low | $\overline{SHDN}$ = $V_{CC-}$ | | 10 | | |
| $I_{OLeak}$ | Output leakage in shutdown mode | $\overline{SHDN}$ = $V_{CC-}$ | | 50 | | |
| | | $T_{min}$ < $T_{op}$ < 125 °C | | 1 | | nA |

Figure 2: Supply current vs. supply voltage at Vicm = VCC/2

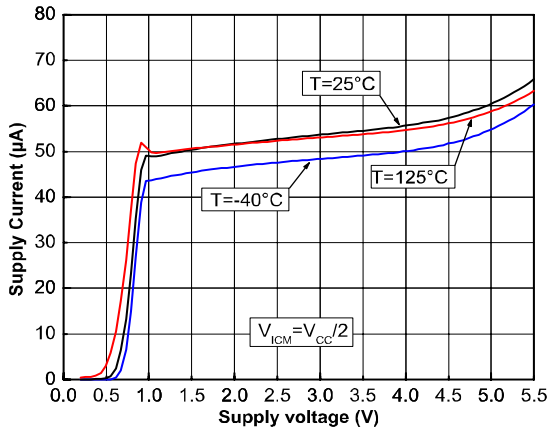


Figure 3: Output current vs. output voltage at VCC = 1.5 V

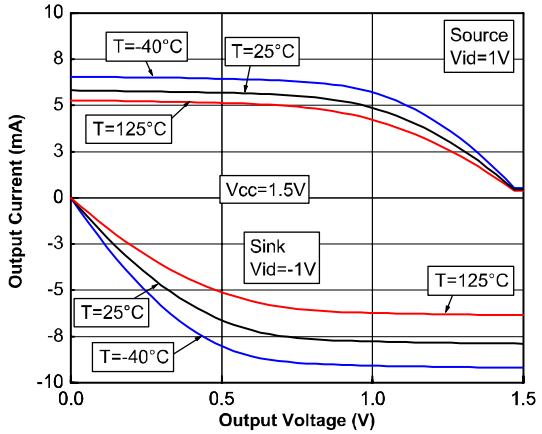


Figure 4: Output current vs. output voltage at VCC = 5 V

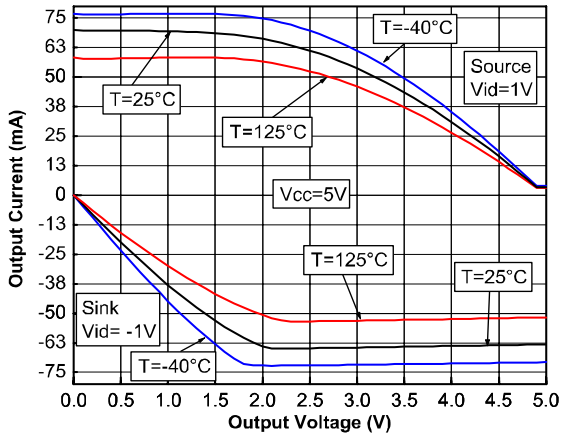


Figure 5: Voltage gain and phase vs. frequency at VCC = 1.5 V

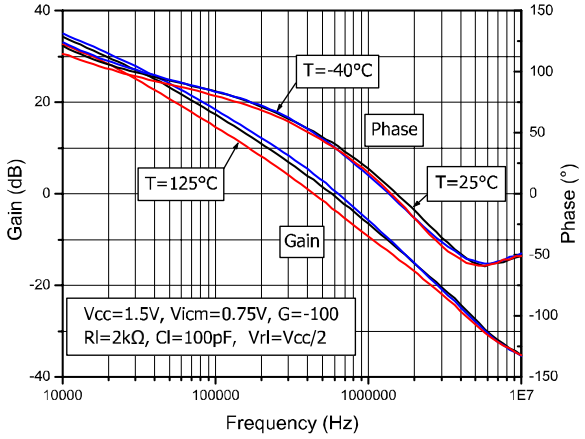


Figure 6: Voltage gain and phase vs. frequency at VCC = 5 V

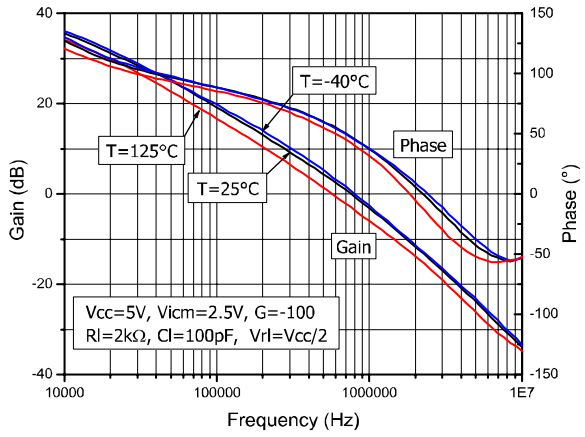


Figure 7: Phase margin vs. output current at VCC = 5 V

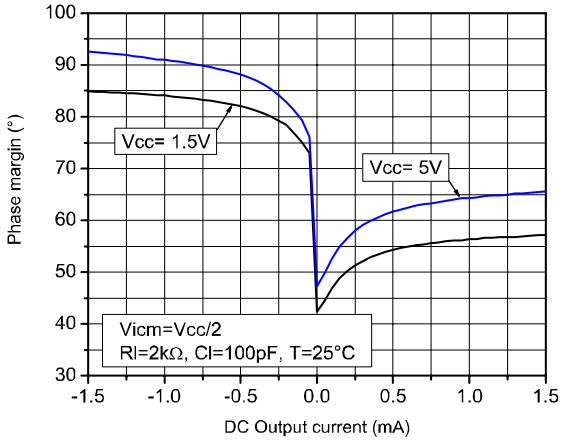

Figure 8: Positive slew rate vs. time

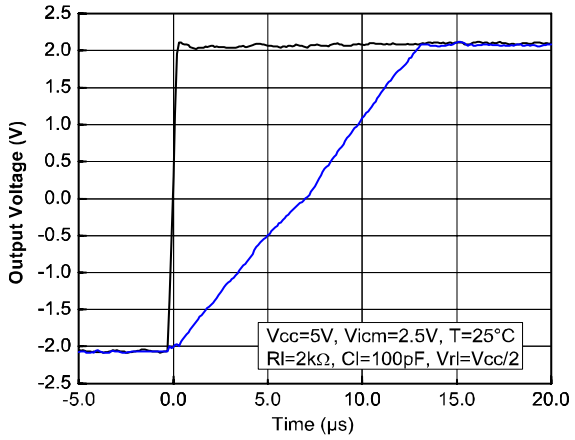


Figure 9: Negative slew rate vs. time

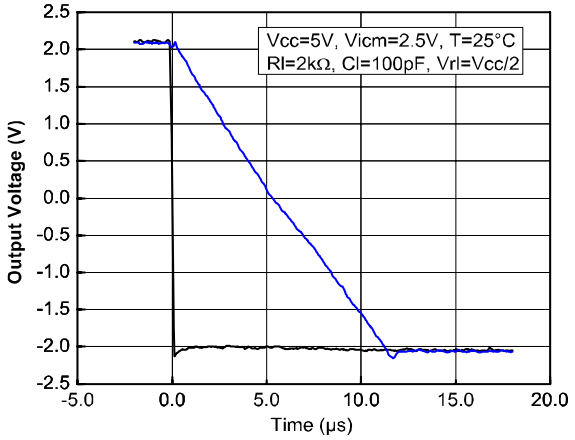


Figure 10: Positive slew rate vs. supply voltage

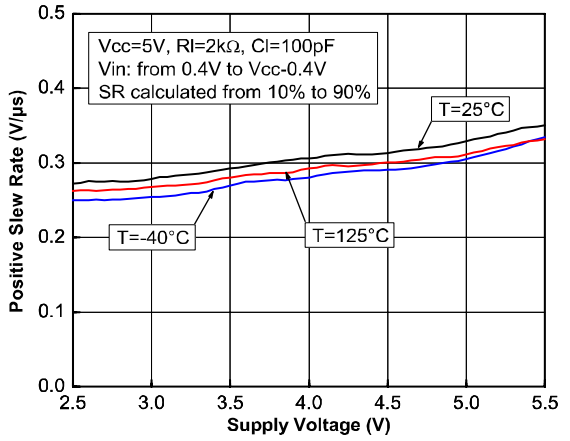


Figure 11: Negative slew rate vs. supply voltage

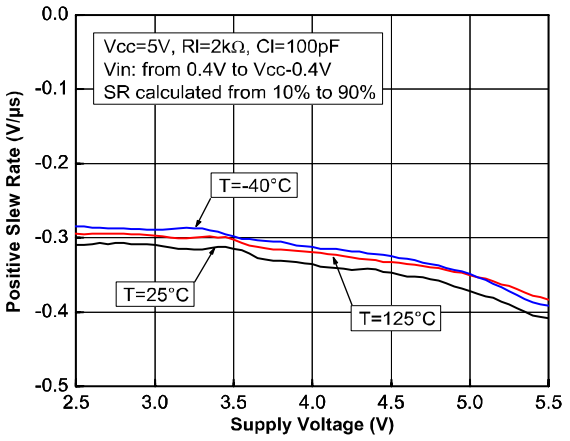


Figure 12: Distortion + noise vs. output voltage

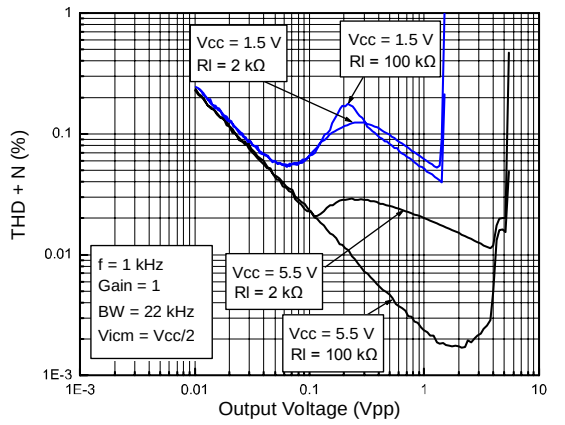


Figure 13: Distortion + noise vs. frequency

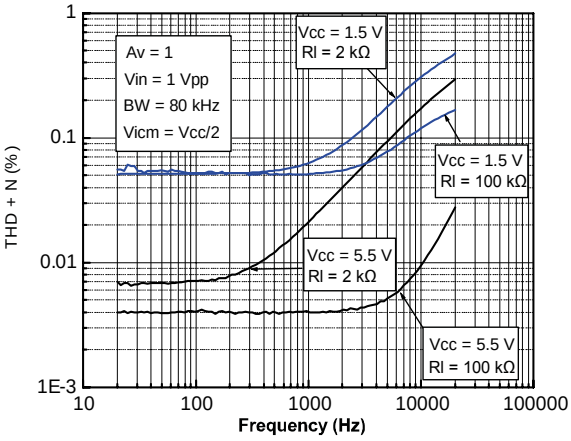

Figure 14: Noise vs. frequency

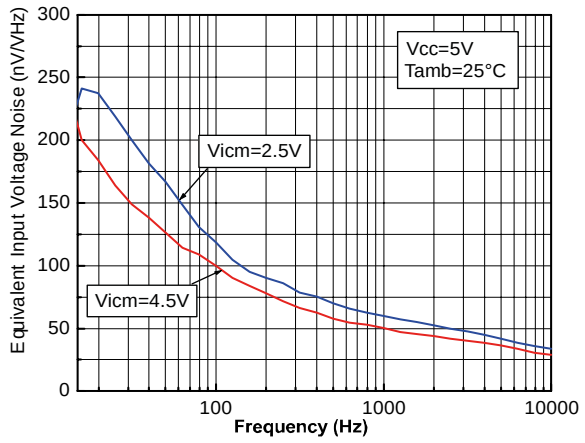


Figure 15: EMIRR vs. frequency at VCC = 5 V, T = 25 °C

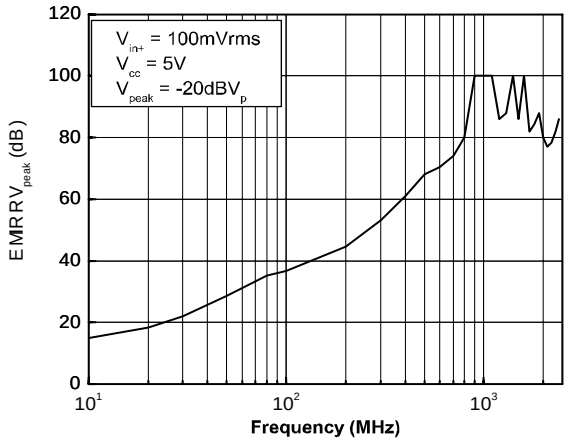

# 4 Application information

## 4.1 Operating voltages

The TSV63x and TSV63xA can operate from 1.5 to 5.5 V. Their parameters are fully specified for 1.8 V, 3.3 V, and 5 V power supplies. However, the parameters are very stable in the full $V_{CC}$ range and several characterization curves show the TSV63x and TSV63xA characteristics at 1.5 V. Additionally, the main specifications are guaranteed in extended temperature ranges from -40 °C to 125 °C.

## 4.2 Rail-to-rail input

The TSV63x and TSV63xA are built with two complementary PMOS and NMOS input differential pairs. The devices have a rail-to-rail input and the input common mode range is extended from ($V_{CC-}$) - 0.1 V to ($V_{CC+}$) + 0.1 V. The transition between the two pairs appears at (VCC+) - 0.7 V. In the transition region, the performance of CMRR, PSRR, Vio (*Figure 16* and *Figure 17*), and THD is slightly degraded.

Figure 16: Input offset voltage vs input common mode voltage at VCC = 1.5 V

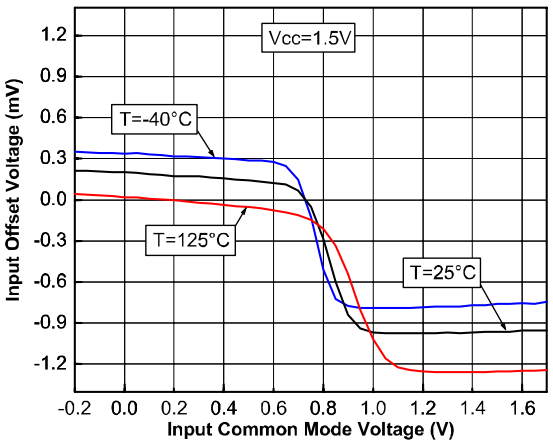


Figure 17: Input offset voltage vs input common mode voltage at VCC = 5 V

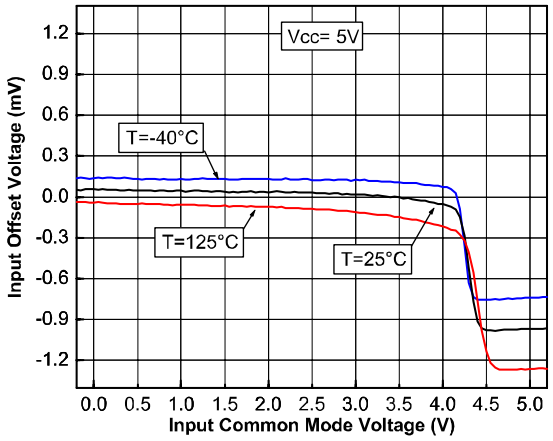


The devices are guaranteed without phase reversal.

## 4.3 Rail-to-rail output

The operational amplifiers' output levels can go close to the rails: 35 mV maximum above and below the rail when connected to a 10 kΩ resistive load to $V_{CC}/2$.

## 4.4 Shutdown function (TSV633, TSV635)

The operational amplifiers are enabled when the $\overline{SHDN}$ pin is pulled high. To disable the amplifiers, the $\overline{SHDN}$ must be pulled down to $V_{CC-}$. When in shutdown mode, the amplifiers' output is in a high impedance state. The $\overline{SHDN}$ pin must never be left floating, but tied to $V_{CC+}$ or $V_{CC-}$.

The turn-on and turn-off times are calculated for an output variation of ±200 mV. *Figure 18* and *Figure 19* show the test configurations. *Figure 20* shows the time it takes the product to come out of shutdown mode and *Figure 21* shows the time it takes the product to enter shutdown mode.

Figure 18: Test configuration for turn-on time (Vout pulled down)

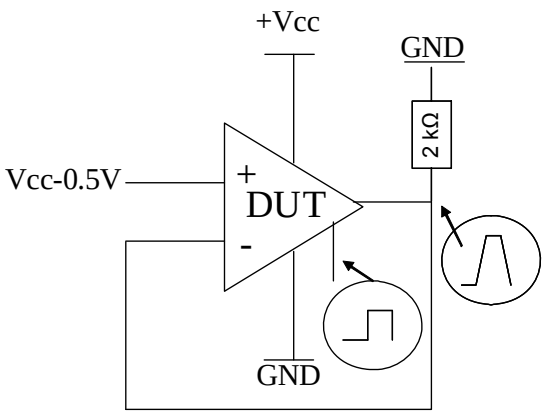


Figure 19: Test configuration for turn-off time (Vout pulled down)

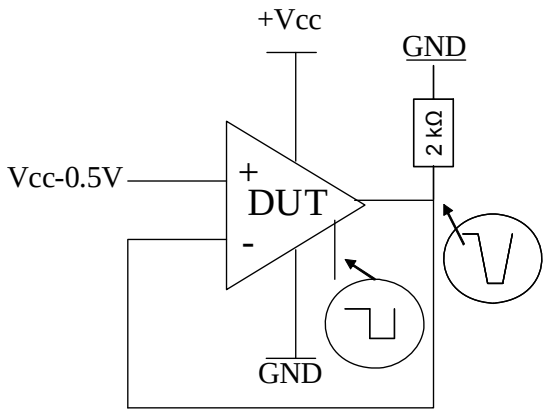


Figure 20: Turn-on time, VCC = 5 V, Vout pulled down, T = 25° C

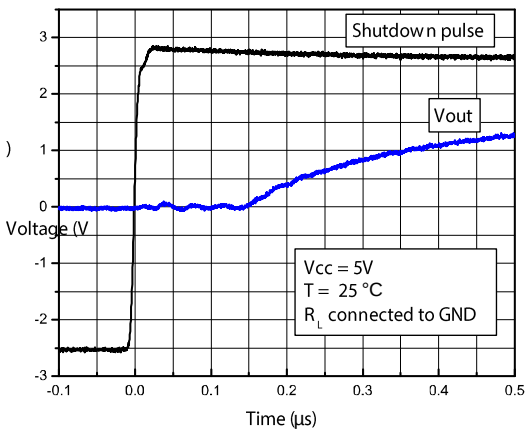


Figure 21: Turn-off time, VCC = 5 V, Vout pulled down, T = 25° C

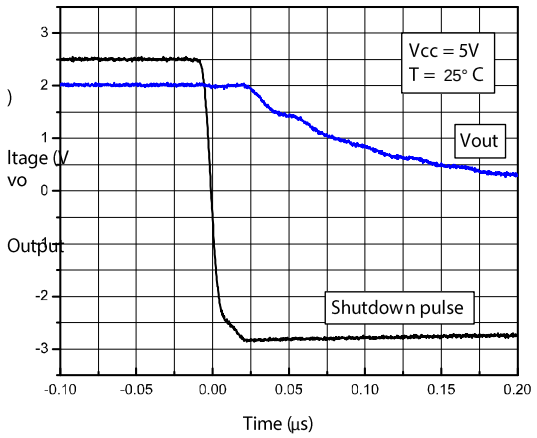

## 4.5 Optimization of DC and AC parameters

These devices use an innovative approach to reduce the spread of the main DC and AC parameters. An internal adjustment achieves a very narrow spread of the current consumption (60 µA typical, min/max at ±17 %). Parameters linked to the current consumption value, such as GBP, SR, and $A_{vd}$, benefit from this narrow dispersion. All parts present a similar speed and the same behavior in terms of stability. In addition, the minimum values of GBP and SR are guaranteed (GBP = 730 kHz minimum and SR = 0.25 V/µs minimum).

## 4.6 Driving resistive and capacitive loads

These products are micropower, low-voltage, operational amplifiers optimized to drive rather large resistive loads, above 2 kΩ. For lower resistive loads, the THD level may significantly increase.

In a *follower* configuration, these operational amplifiers can drive capacitive loads up to 100 pF with no oscillations. When driving larger capacitive loads, adding an in-series resistor at the output can improve the stability of the devices (see *Figure 22* for recommended in-series resistor values). Once the in-series resistor value has been selected, the stability of the circuit should be tested on the bench and simulated with the simulation model.

**Figure 22: In-series resistor vs. capacitive load**

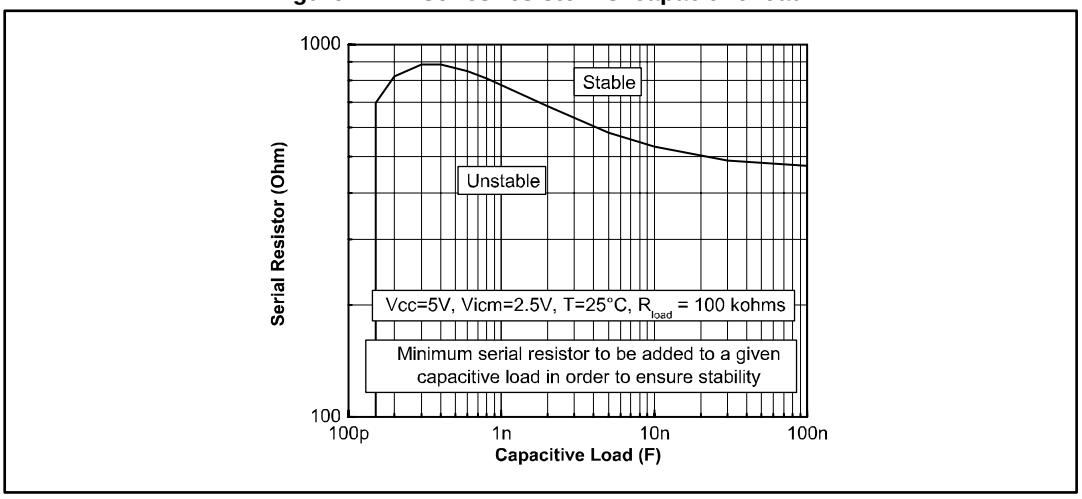


## 4.7 PCB layouts

For correct operation, it is advised to add 10 nF decoupling capacitors as close as possible to the power supply pins.

## 4.8 Macromodel

Two accurate macromodels (with or without the shutdown feature) of the TSV63x and TSV63xA are available on STMicroelectronics' web site at www.st.com. These models are a trade-off between accuracy and complexity (that is, time simulation) of the TSV63x and TSV63xA operational amplifiers. They emulate the nominal performances of a typical device within the specified operating conditions mentioned in the datasheet. They also help to validate a design approach and to select the right operational amplifier, *but they do not replace on*-board measurements.

# 5 Package information

In order to meet environmental requirements, ST offers these devices in different grades of ECOPACK® packages, depending on their level of environmental compliance. ECOPACK® specifications, grade definitions and product status are available at: ***www.st.com***. ECOPACK® is an ST trademark.

## 5.1 DFN8 2 x 2 (NB) package information

**Figure 23: DFN8 2 x 2 mm (NB) package outline**

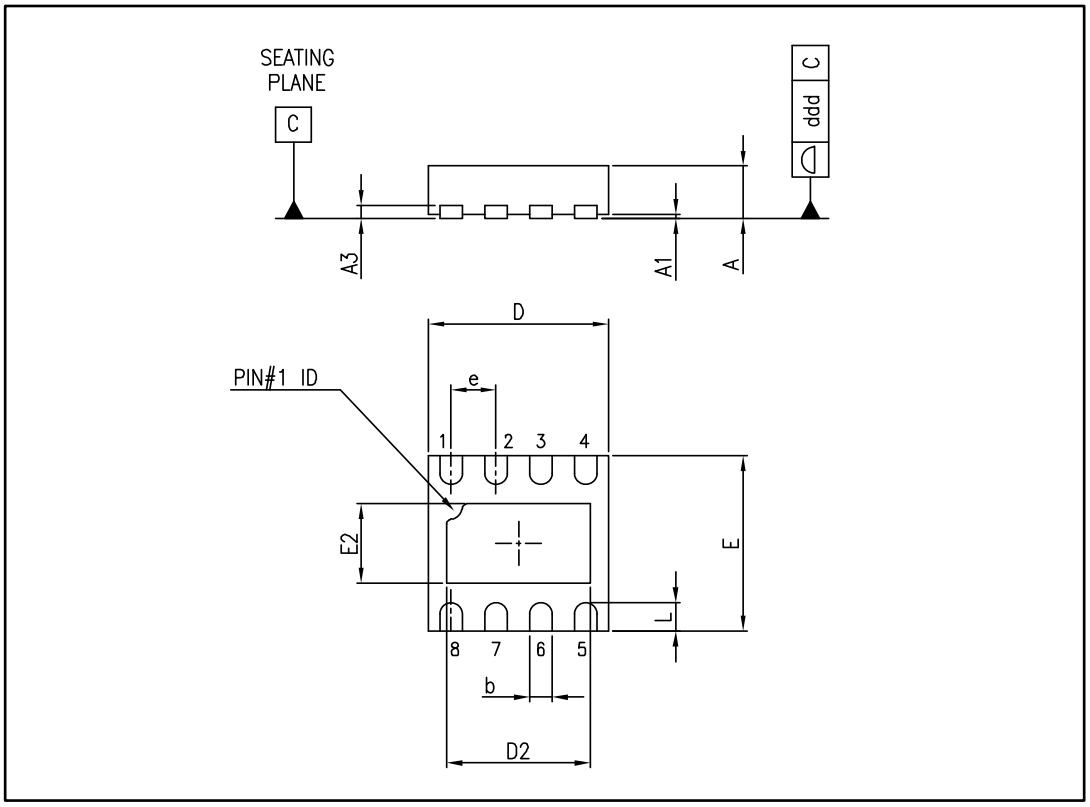


**Table 9: DFN8 2 x 2 x 0.6 mm (NB) package mechanical data (pitch 0.5 mm)**

| Ref. | Dimensions | | | | | |
|---|---|---|---|---|---|---|
| | Millimeters | | | Inches | | |
| | Min. | Typ. | Max. | Min. | Typ. | Max. |
| A | 0.51 | 0.55 | 0.60 | 0.020 | 0.022 | 0.024 |
| A1 | | | 0.05 | | | 0.002 |
| A3 | | 0.15 | | | 0.006 | |
| b | 0.18 | 0.25 | 0.30 | 0.007 | 0.010 | 0.012 |
| D | 1.85 | 2.00 | 2.15 | 0.073 | 0.079 | 0.085 |
| D2 | 1.45 | 1.60 | 1.70 | 0.057 | 0.063 | 0.067 |
| E | 1.85 | 2.00 | 2.15 | 0.073 | 0.079 | 0.085 |
| E2 | 0.75 | 0.90 | 1.00 | 0.030 | 0.035 | 0.039 |
| e | | 0.50 | | | 0.020 | |
| L | | | 0.425 | | | 0.017 |
| ddd | | | 0.08 | | | 0.003 |

**Figure 24: DFN8 2 x 2 mm (NB) recommended footprint**

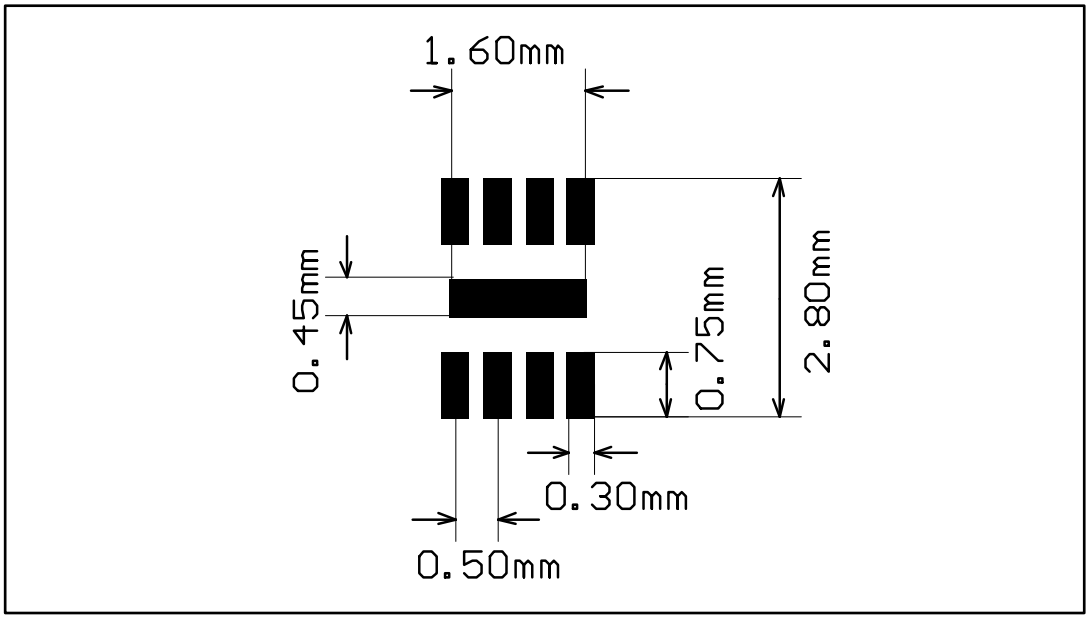

## 5.2 SOT23-8 package information

**Figure 25: SOT23-8 package outline**

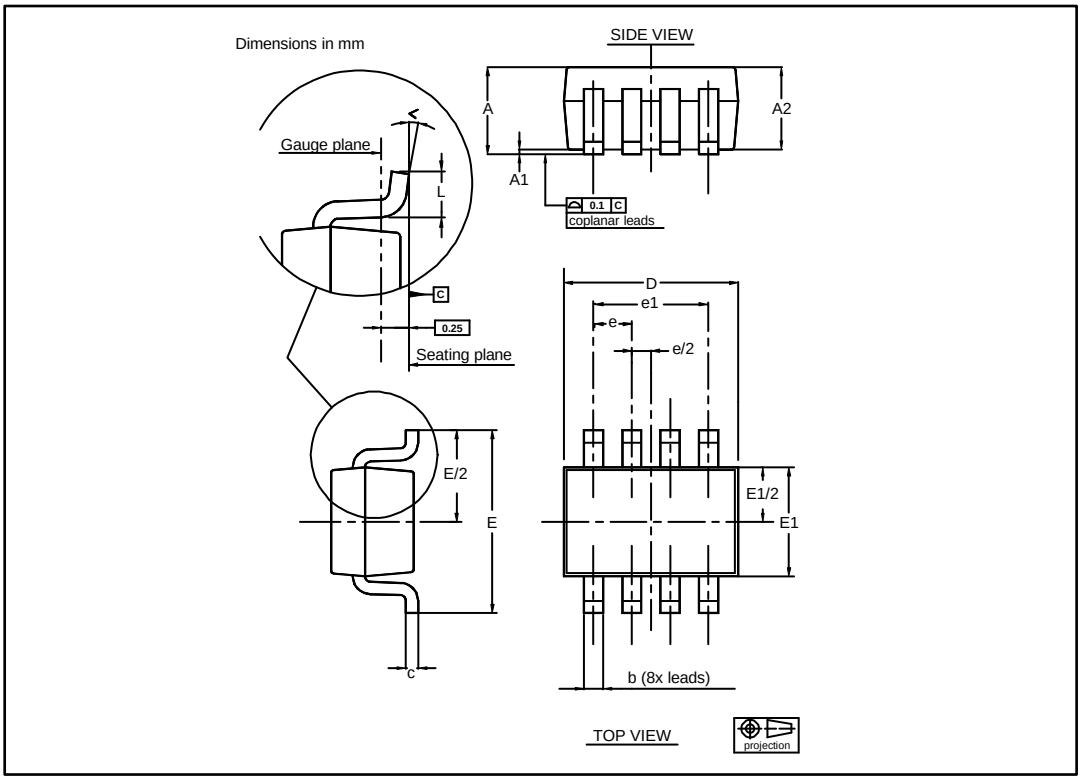


**Table 10: SOT23-8 package mechanical data**

| Ref. | Dimensions | | | | | |
|---|---|---|---|---|---|---|
| | Millimeters | | | Inches | | |
| | Min. | Typ. | Max. | Min. | Typ. | Max. |
| A | | | 1.45 | | | 0.057 |
| A1 | | | 0.15 | | | 0.006 |
| A2 | 0.90 | | 1.30 | 0.035 | | 0.051 |
| b | 0.22 | | 0.38 | 0.009 | | 0.015 |
| c | 0.08 | | 0.22 | 0.003 | | 0.009 |
| D | 2.80 | | 3.00 | 0.110 | | 0.118 |
| E | 2.60 | | 3.00 | 0.102 | | 0.118 |
| E1 | 1.50 | | 1.75 | 0.059 | | 0.069 |
| e | | 0.65 | | | 0.026 | |
| e1 | | 1.95 | | | 0.077 | |
| L | 0.30 | | 0.60 | 0.012 | | 0.024 |
| < | 0° | | 8° | 0° | | 8° |

## 5.3 MiniSO8 package information

**Figure 26: MiniSO8 package outline**

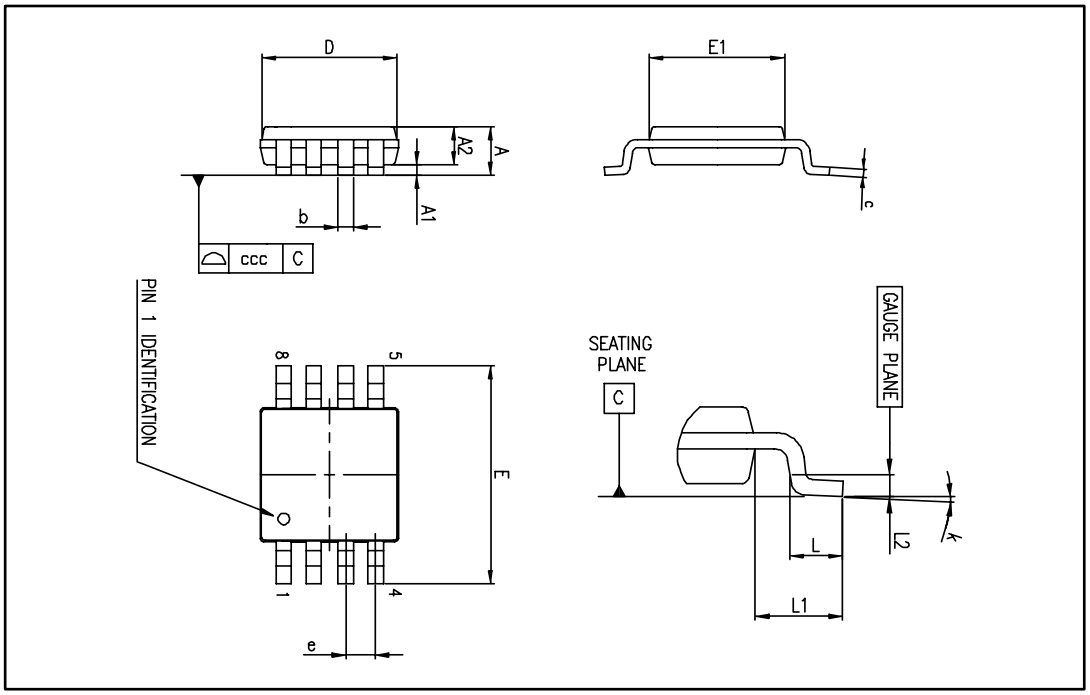


**Table 11: MiniSO8 package mechanical data**

| Ref. | Dimensions | | | | | |
|---|---|---|---|---|---|---|
| | Millimeters | | | Inches | | |
| | Min. | Typ. | Max. | Min. | Typ. | Max. |
| A | | | 1.1 | | | 0.043 |
| A1 | 0 | | 0.15 | 0 | | 0.006 |
| A2 | 0.75 | 0.85 | 0.95 | 0.030 | 0.033 | 0.037 |
| b | 0.22 | | 0.40 | 0.009 | | 0.016 |
| c | 0.08 | | 0.23 | 0.003 | | 0.009 |
| D | 2.80 | 3.00 | 3.20 | 0.11 | 0.118 | 0.126 |
| E | 4.65 | 4.90 | 5.15 | 0.183 | 0.193 | 0.203 |
| E1 | 2.80 | 3.00 | 3.10 | 0.11 | 0.118 | 0.122 |
| e | | 0.65 | | | 0.026 | |
| L | 0.40 | 0.60 | 0.80 | 0.016 | 0.024 | 0.031 |
| L1 | | 0.95 | | | 0.037 | |
| L2 | | 0.25 | | | 0.010 | |
| k | 0° | | 8° | 0° | | 8° |
| ccc | | | 0.10 | | | 0.004 |

## 5.4 MiniSO10 package information

**Figure 27: MiniSO10 package outline**

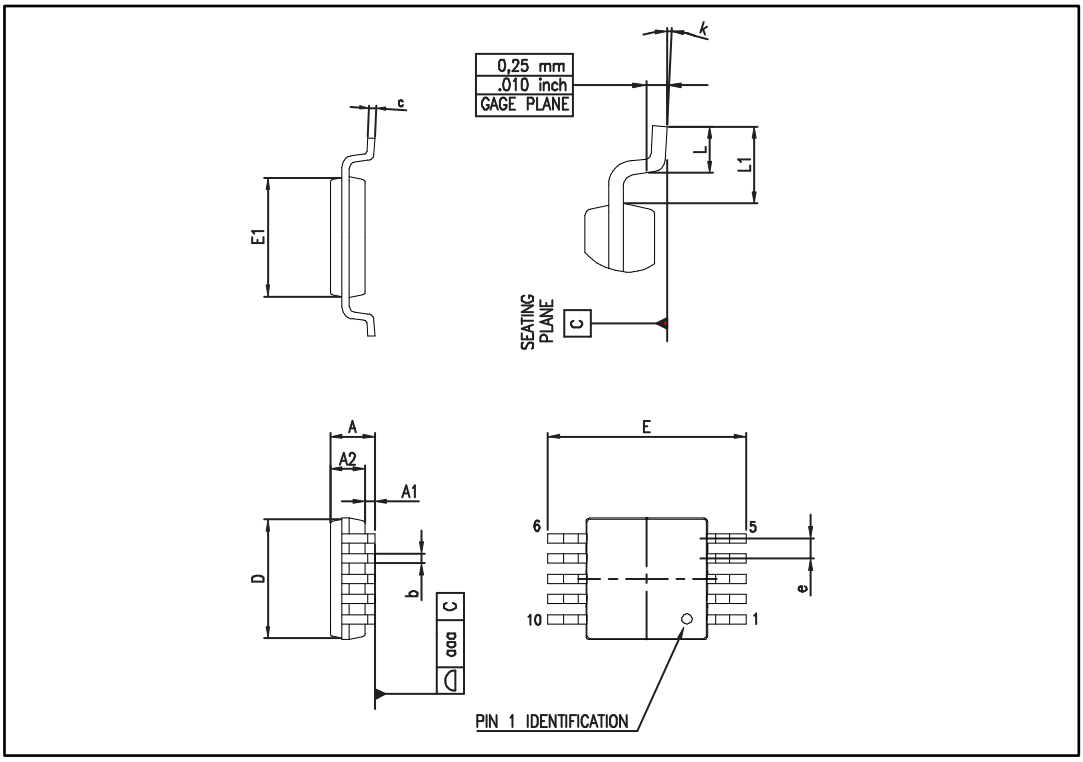


**Table 12: MiniSO-10 package mechanical data**

| Ref. | Dimensions | | | | | |
|---|---|---|---|---|---|---|
| | Millimeters | | | Inches | | |
| | Min. | Typ. | Max. | Min. | Typ. | Max. |
| A | | | 1.10 | | | 0.043 |
| A1 | 0.05 | 0.10 | 0.15 | 0.002 | 0.004 | 0.006 |
| A2 | 0.78 | 0.86 | 0.94 | 0.031 | 0.034 | 0.037 |
| b | 0.25 | 0.33 | 0.40 | 0.010 | 0.013 | 0.016 |
| c | 0.15 | 0.23 | 0.30 | 0.006 | 0.009 | 0.012 |
| D | 2.90 | 3.00 | 3.10 | 0.114 | 0.118 | 0.122 |
| E | 4.75 | 4.90 | 5.05 | 0.187 | 0.193 | 0.199 |
| E1 | 2.90 | 3.00 | 3.10 | 0.114 | 0.118 | 0.122 |
| e | | 0.50 | | | 0.020 | |
| L | 0.40 | 0.55 | 0.70 | 0.016 | 0.022 | 0.028 |
| L1 | | 0.95 | | | 0.037 | |
| k | 0° | 3° | 6° | 0° | 3° | 6° |
| aaa | | | 0.10 | | | 0.004 |

## 5.5 SO8 package information

**Figure 28: SO8 package outline**

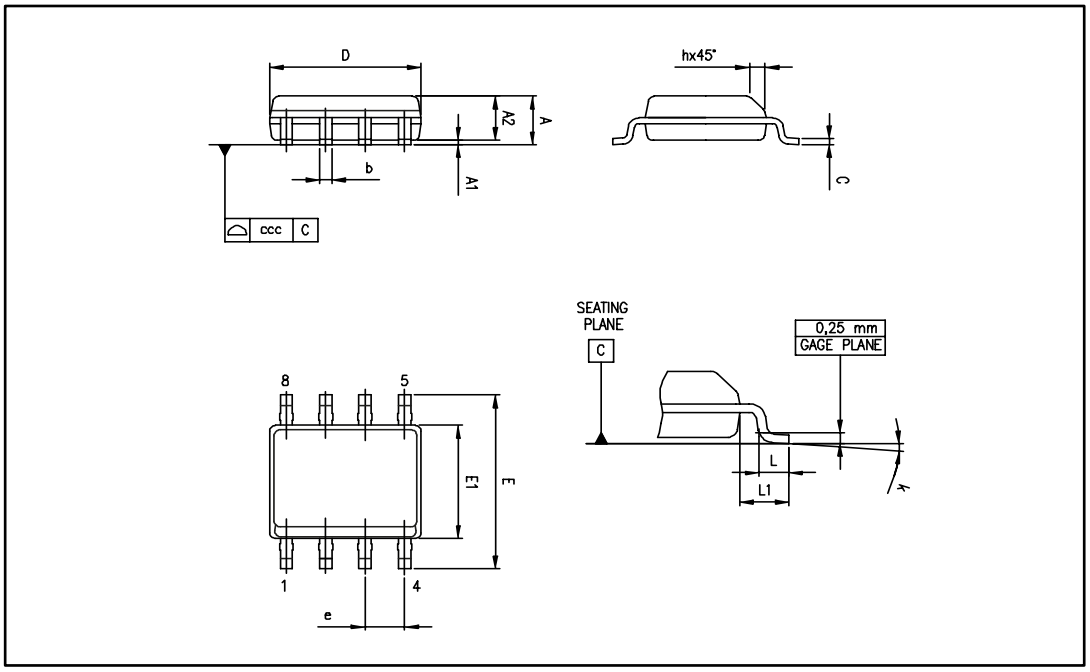


**Table 13: SO8 package mechanical data**

| Ref. | Dimensions | | | | | |
|---|---|---|---|---|---|---|
| | Millimeters | | | Inches | | |
| | Min. | Typ. | Max. | Min. | Typ. | Max. |
| A | | | 1.75 | | | 0.069 |
| A1 | 0.10 | | 0.25 | 0.004 | | 0.010 |
| A2 | 1.25 | | | 0.049 | | |
| b | 0.28 | | 0.48 | 0.011 | | 0.019 |
| c | 0.17 | | 0.23 | 0.007 | | 0.010 |
| D | 4.80 | 4.90 | 5.00 | 0.189 | 0.193 | 0.197 |
| E | 5.80 | 6.00 | 6.20 | 0.228 | 0.236 | 0.244 |
| E1 | 3.80 | 3.90 | 4.00 | 0.150 | 0.154 | 0.157 |
| e | | 1.27 | | | 0.050 | |
| h | 0.25 | | 0.50 | 0.010 | | 0.020 |
| L | 0.40 | | 1.27 | 0.016 | | 0.050 |
| L1 | | 1.04 | | | 0.040 | |
| k | 1° | | 8° | 1° | | 8° |
| ccc | | | 0.10 | | | 0.004 |

## 5.6 QFN16 3x3 package information

**Figure 29: QFN16 3x3 mm package outline**

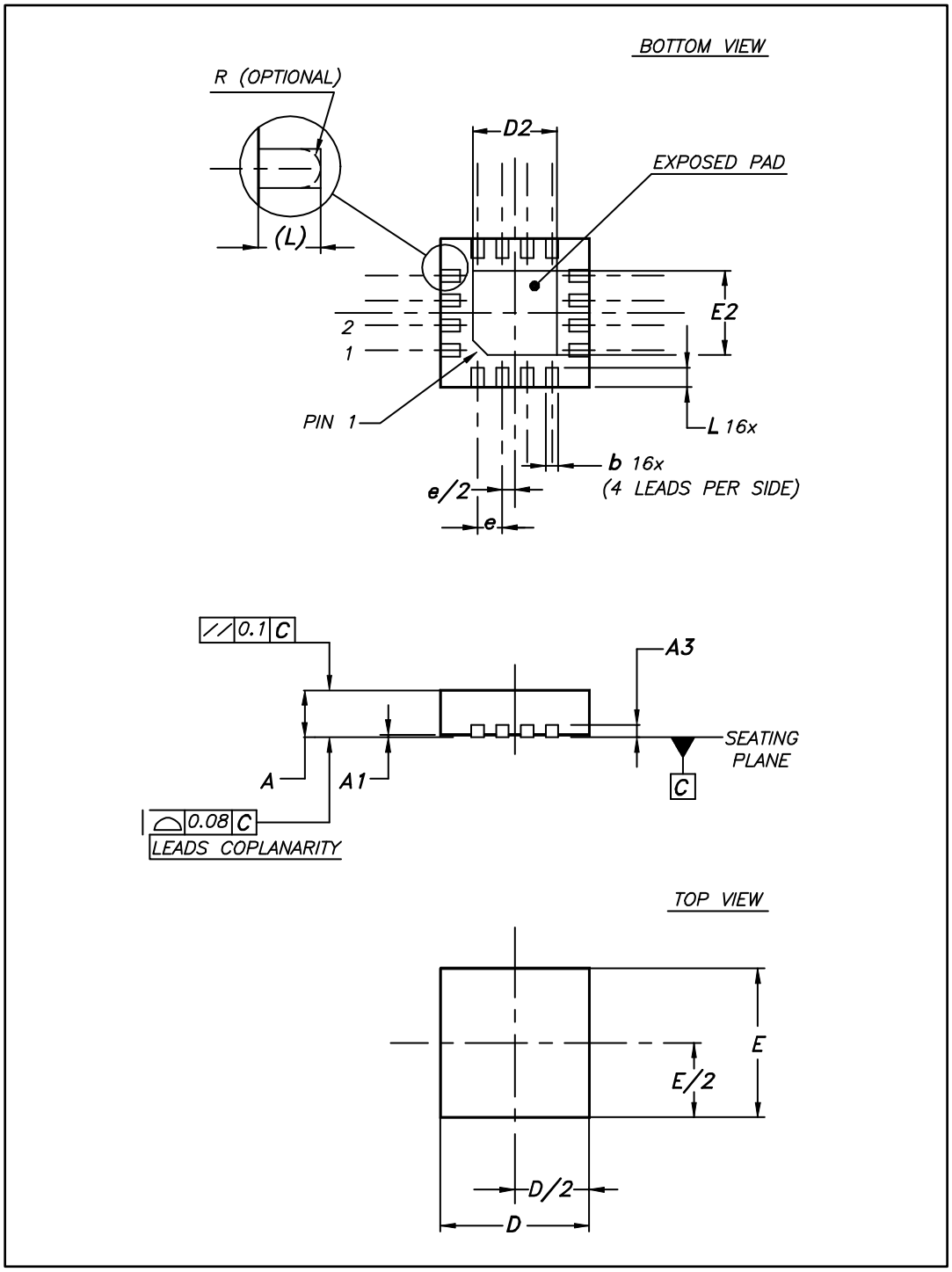

**Table 14: QFN16 3x3 mm package mechanical data**

| Ref. | Dimensions | | | | | |
|---|---|---|---|---|---|---|
| | Millimeters | | | Inches | | |
| | Min. | Typ. | Max. | Min. | Typ. | Max. |
| A | 0.80 | 0.90 | 1.00 | 0.031 | 0.035 | 0.039 |
| A1 | 0 | | 0.05 | 0 | | 0.002 |
| A3 | | 0.20 | | | 0.008 | |
| b | 0.18 | | 0.30 | 0.007 | | 0.012 |
| D | 2.90 | 3.00 | 3.10 | 0.114 | 0.118 | 0.122 |
| D2 | 1.50 | | 1.80 | 0.059 | | 0.071 |
| E | 2.90 | 3.00 | 3.10 | 0.114 | 0.118 | 0.122 |
| E2 | 1.50 | | 1.80 | 0.059 | | 0.071 |
| e | | 0.50 | | | 0.020 | |
| L | 0.30 | | 0.50 | 0.012 | | 0.020 |

**Figure 30: QFN16 3x3 mm recommended footprint**

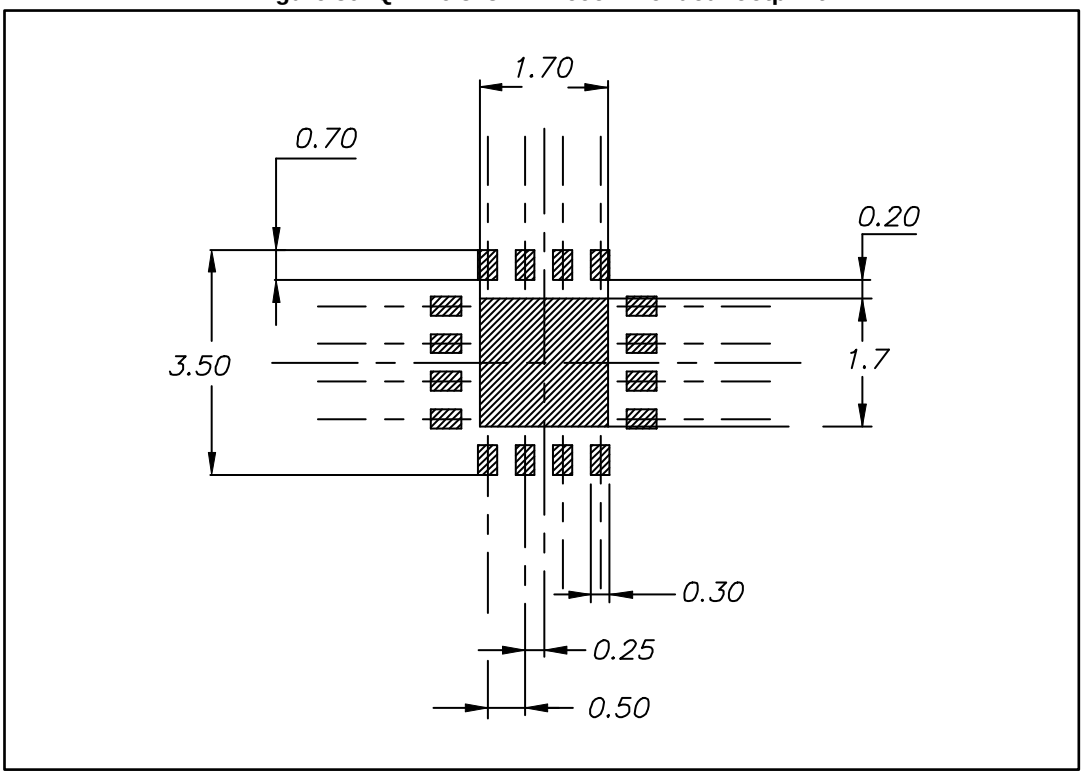

## 5.7 TSSOP14 package information

**Figure 31: TSSOP14 package outline**

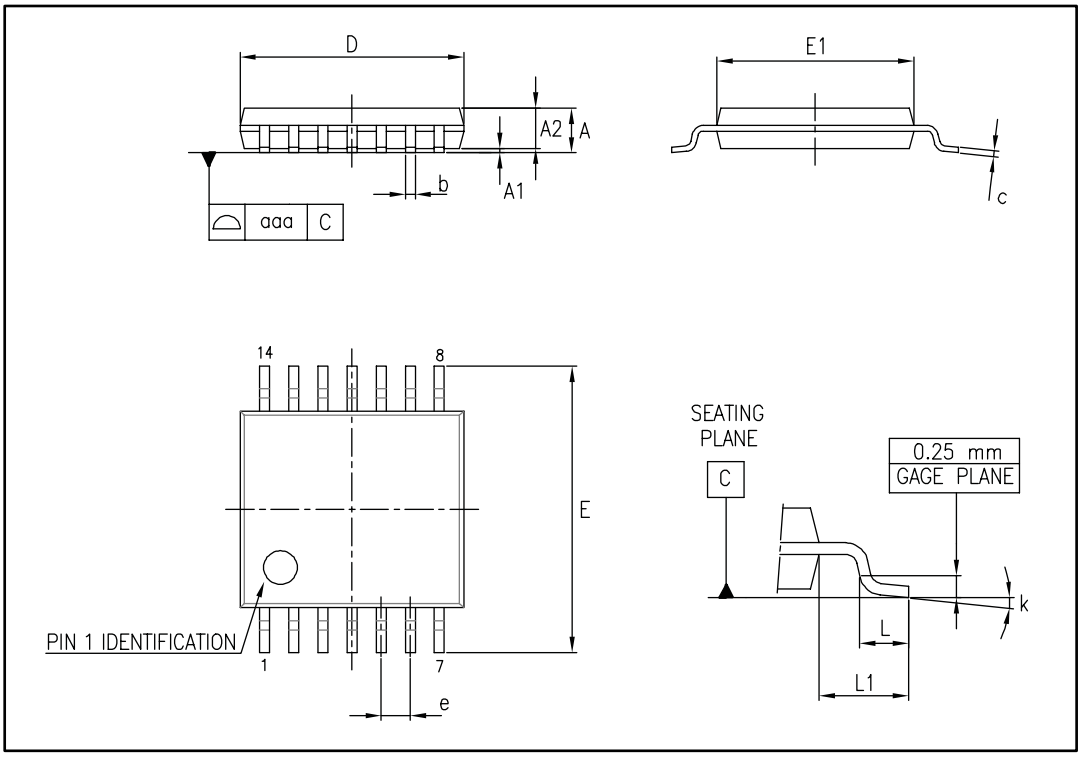


**Table 15: TSSOP14 package mechanical data**

| Ref. | Dimensions | | | | | |
|---|---|---|---|---|---|---|
| | Millimeters | | | Inches | | |
| | Min. | Typ. | Max. | Min. | Typ. | Max. |
| A | | | 1.20 | | | 0.047 |
| A1 | 0.05 | | 0.15 | 0.002 | 0.004 | 0.006 |
| A2 | 0.80 | 1.00 | 1.05 | 0.031 | 0.039 | 0.041 |
| b | 0.19 | | 0.30 | 0.007 | | 0.012 |
| c | 0.09 | | 0.20 | 0.004 | | 0.0089 |
| D | 4.90 | 5.00 | 5.10 | 0.193 | 0.197 | 0.201 |
| E | 6.20 | 6.40 | 6.60 | 0.244 | 0.252 | 0.260 |
| E1 | 4.30 | 4.40 | 4.50 | 0.169 | 0.173 | 0.176 |
| e | | 0.65 | | | 0.0256 | |
| L | 0.45 | 0.60 | 0.75 | 0.018 | 0.024 | 0.030 |
| L1 | | 1.00 | | | 0.039 | |
| k | 0° | | 8° | 0° | | 8° |
| aaa | | | 0.10 | | | 0.004 |

## 5.8 TSSOP16 package information

**Figure 32: TSSOP16 package outline**

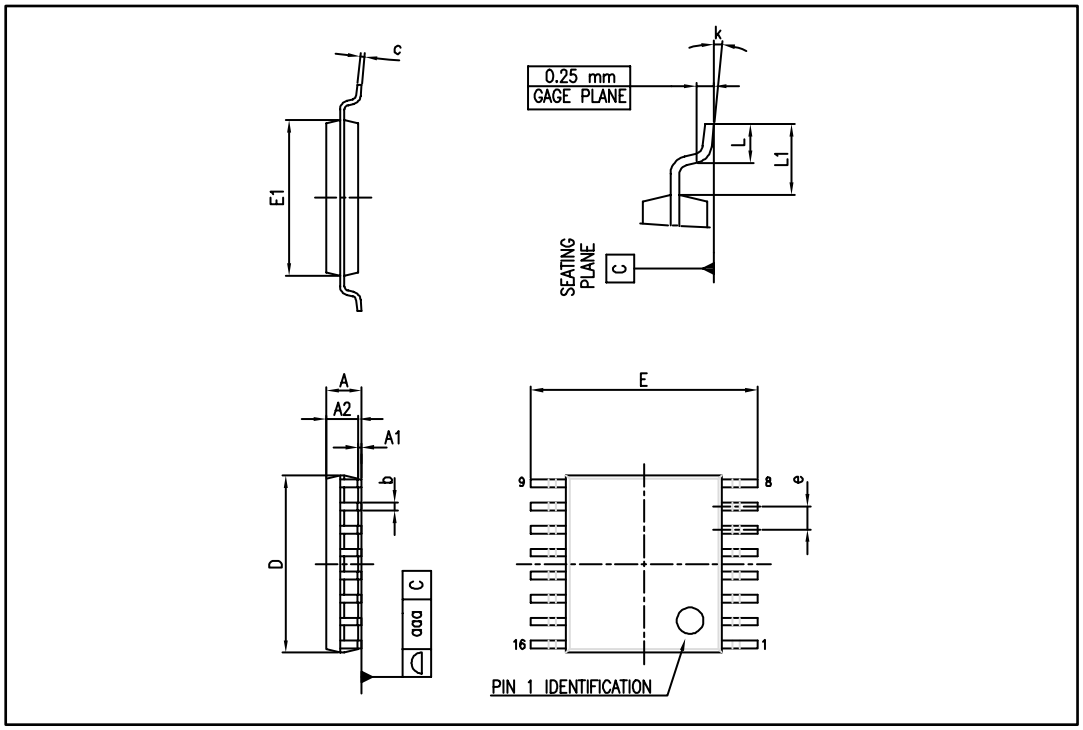


**Table 16: TSSOP16 package mechanical data**

| Ref. | Dimensions | | | | | |
|---|---|---|---|---|---|---|
| | Millimeters | | | Inches | | |
| | Min. | Typ. | Max. | Min. | Typ. | Max. |
| A | | | 1.20 | | | 0.047 |
| A1 | 0.05 | | 0.15 | 0.002 | | 0.006 |
| A2 | 0.80 | 1.00 | 1.05 | 0.031 | 0.039 | 0.041 |
| b | 0.19 | | 0.30 | 0.007 | | 0.012 |
| c | 0.09 | | 0.20 | 0.004 | | 0.008 |
| D | 4.90 | 5.00 | 5.10 | 0.193 | 0.197 | 0.201 |
| E | 6.20 | 6.40 | 6.60 | 0.244 | 0.252 | 0.260 |
| E1 | 4.30 | 4.40 | 4.50 | 0.169 | 0.173 | 0.177 |
| e | | 0.65 | | | 0.026 | |
| k | 0° | | 8° | 0° | | 8° |
| L | 0.45 | 0.60 | 0.75 | 0.018 | 0.024 | 0.030 |
| L1 | | 1.00 | | | 0.039 | |
| aaa | | | 0.10 | | | 0.004 |

# 6 Ordering information

**Table 17: Order codes**

| Order code | Temperature range | Package [1] | Marking |
|---|---|---|---|
| TSV632AIDT | -40 °C to 125 °C | SO8 | TV632A |
| TSV632AILT | | SOT23-8 | K145 |
| TSV632AIQ2T | | DFN8 2x2 | K1P |
| TSV632AIST | | MiniSO8 | K145 |
| TSV632IDT | | SO8 | TSV632 |
| TSV632ILT | | SOT23-8 | K110 |
| TSV632IQ2T | | DFN8 2x2 | K1N |
| TSV632IST | | MiniSO8 | K110 |
| TSV632IYDT | -40 °C to 125 °C, automotive grade [2] | SO8 | V632IY |
| TSV633AIST | -40 °C to 125 °C | MiniSO10 | K146 |
| TSV633IST | | | K111 |
| TSV634AIPT | | TSSOP14 | TSV634A |
| TSV634IQ4T | | QFN16 3x3 | K112 |
| TSV634IPT | | TSSOP14 | TSV634 |
| TSV634IYPT | -40 °C to 125 °C, automotive grade [2] | | V634IY |
| TSV635AIPT | -40 °C to 125 °C | TSSOP16 | TSV635A |
| TSV635IPT | | | TSV635 |

**Notes:**

[1] All devices are in tape and reel packing

[2] Qualified and characterized according to AEC Q100 and Q003 or equivalent, advanced screening according to AEC Q001 and Q002.

# 7 Revision history

**Table 18: Document revision history**

| Date | Revision | Changes |
|---|---|---|
| 25-May-2009 | 1 | Initial release. |
| 15-Jun-2009 | 2 | Corrected pin connection diagram in *Figure 1*. |
| 03-Sep-2009 | 3 | Added root part numbers (TSV63xA) and *Table 1: "Device summary"* on cover page.<br>Added order code TSV632AILT in *Table 17: "Order codes"*. |
| 07-Nov-2011 | 4 | Added DFN8 2x2 package mechanical drawing.<br>Added ordering information for DFN package to *Table 17: "Order codes"*.<br>Corrected unit on Y axis of *Figure 16* and *Figure 17*. |
| 13-Dec-2012 | 5 | Updated *Features*<br>Added QFN16 3x3 package<br>Updated *Figure 1: "Pin connections for each package (top view)"*.<br>*Table 4*, *Table 6*, and *Table 7*: replaced $DV_{io}$ symbol with $\Delta V_{io}/\Delta T$<br>*Table 4*, *Table 5*, *Table 6*, *Table 7* and *Table 8*: for supply current parameter, replaced “operator” with “channel”.<br>*Table 17: "Order codes"*: added automotive order codes and updated footnote<br>Deleted TSV632ID/AID from order codes in *Table 17: "Order codes"* |
| 29-May-2015 | 6 | *Table 4*, *Table 6*, and *Table 7*: $V_{OH}$ "min" values changed to "max" values.<br>*Table 17: "Order codes"*: added order code TSV632AIQ2T, updated footnote 1. |

## IMPORTANT NOTICE – PLEASE READ CAREFULLY

STMicroelectronics NV and its subsidiaries ("ST") reserve the right to make changes, corrections, enhancements, modifications, and improvements to ST products and/or to this document at any time without notice. Purchasers should obtain the latest relevant information on ST products before placing orders. ST products are sold pursuant to ST's terms and conditions of sale in place at the time of order acknowledgement.

Purchasers are solely responsible for the choice, selection, and use of ST products and ST assumes no liability for application assistance or the design of Purchasers' products.

No license, express or implied, to any intellectual property right is granted by ST herein.

Resale of ST products with provisions different from the information set forth herein shall void any warranty granted by ST for such product.

ST and the ST logo are trademarks of ST. All other product or service names are the property of their respective owners.

Information in this document supersedes and replaces information previously supplied in any prior versions of this document.

© 2015 STMicroelectronics – All rights reserved