DMG48270C043_05WN

Features:

- **Based on T5L0, running DGUS II system, commercial grade.**
- **4.3-inch, 480*272 Pixels resolution, 262K Colors, IPS LCD screen.**
- **8MB memory, cost-effective.**

DWIN Technology Technical Document

sales@prom-elec.com / ООО ПРОМЭЛЕКТРОНИКА

1. Hardware and interface

1.1 Hardware interface

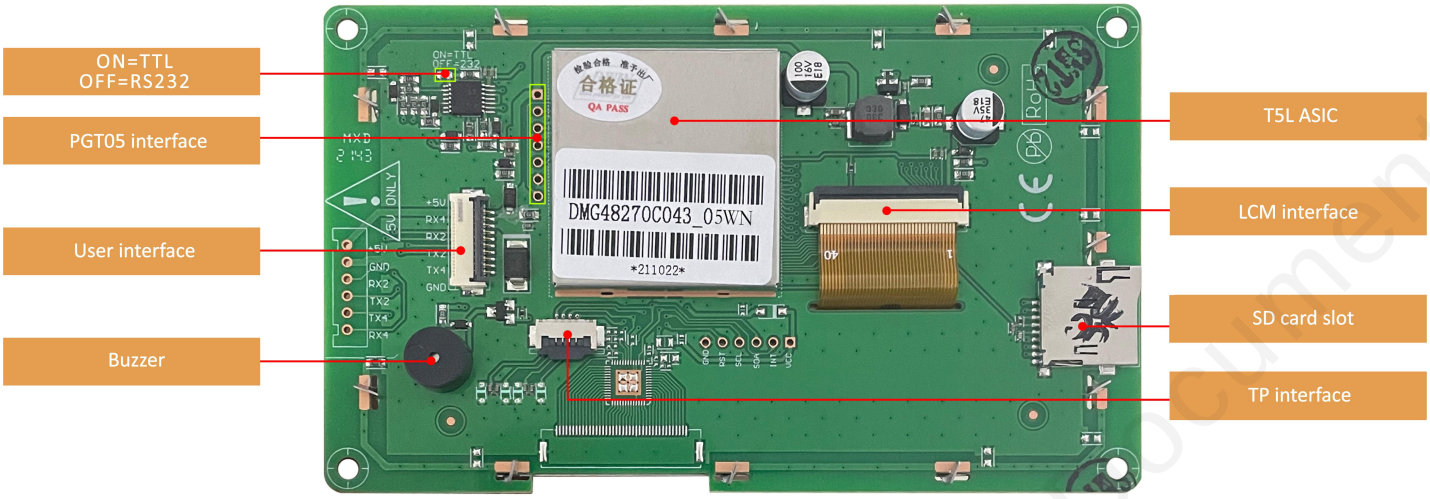

Hardware interface

Disclaimer:

There are multiple parallel raw materials coexisting to guarantee the stable supply.If customers have particular raw material preferences or requirements, please contact the sales personnel.

DWIN Technology Technical Document

1.2 Hardware and interface description

No.	Name	Description
1	T5L0 ASIC	DWIN independently developed, mass production in 2020; patented encryption technology ensures code and data security; low power consumption, strong anti-interference capability, easily passes EMC/EMI tests with dual-sided PCB design
2	User interface	10Pin_1.0mm socket for power supply and serial communication. Download rate(typical value): 12KByte/s
3	Flash	8MBytes NOR Flash, for fonts, pictures and audio files. Rewrite cycle: over 100,000 times
4	Buzzer	3V passive buzzer. Power: <1W
5	SD card interface	Supports downloading of all files (user UI files, CFG files, underlying kernel firmware), displays download statistics on the screen, download rate: 4 Mb/s. When downloading files, the SD card needs to be formatted in FAT32 format, with a recommended allocation unit size of 4096
6	PGT05 interface	Used for reprogramming the underlying DGUS firmware

DWIN Technology Technical Document

2. Specification parameters

2.1 Display parameters

LCD Type	IPS process TFT display screen
Viewing Angle	Wide viewing angle (typical values are 85°/85°/85°/85°), high contrast, and good color reproduction
Resolution	480×272 pixels (0°/90°/180°/270°)
Color	262K color(18-bit 6R6G6B)
Active Area (A.A.)	95.04mm (W)×53.86mm (H)
View Area (V.A.)	-
Interface	RGB
Backlight Mode	LED
Backlight Service Life	>20000 hours (Time of the brightness decaying to 50% on the condition of continuous working with the maximum brightness)
Brightness	300nit
Brightness Control	0~100 grade (When the brightness is adjusted to 1%~30% of the maximum brightness, flickering may occur and is not recommended to use in this range)
Note:You can use dynamic screen saver wallpapers to avoid afterimages caused by fixed page display for a long time.	

DWIN Technology Technical Document

2.2 Serial interface parameters

Mode	UART2: ON=TTL/CMOS; OFF=RS232 UART4: ON=TTL/CMOS; OFF=RS232 (Only available after OS configuration)				
Voltage Level	Test Condition	Min	Typ	Max	Unit
	Output 1, Iout = -4mA	2.7	3.2	-	V
	Output 0, Iout = 4mA	-	0.1	0.4	V
	Input 1	2.4	3.3	5.5	V
	Input 0	0	-	1.0	V
Baud Rate	3150~3225600bps, typical value of 115200bps				
Data Format	UART2: N81 UART4: N81/E81/O81/N82 , 4 modes (OS configuration)				
Interface Cable	10Pin_1.0mm				

2.3 Electrical specifications

Rated Power	<5W	
Operating Voltage	4.5~5.5V, typical value of 5V	
Operating Current	200mA	VCC=5V, max backlight
	70mA	VCC=5V, backlight off
Recommended power supply: 5V 1A DC		

2.4 Operating environment

Operating Temperature	-20℃~70℃ (5V @ 60% RH)
Storage Temperature	-30℃~80℃
Conformal Coating	None
Operating Humidity	10%~90%RH, typical value of 60% RH

DWIN Technology Technical Document

3. Reliability test

3.1 Electrostatic discharge test

Test temperature: 25°C. Test humidity: 50%RH.

Test process: the product was placed on the test bench to perform contact and air discharge in turn of the serial screen iron frame and display area as shown in Fig.3.1 below. During the experimental process, it was observed whether the screen is dead, black, white, splash, or reboot. According to the experiment results, the performance is in line with the criteria GB/T 17626.2 B level and above.

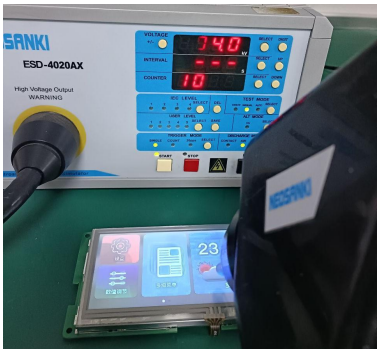

3.1 Electrostatic discharge test

Discharge Type	Discharge Value	Result
Contact discharge	±4KV	Normal operation
Air discharge	±4KV	Normal operation

DWIN Technology Technical Document

4. Packaging & dimensions

Form Factor	121.92mm (W)×73.15mm (H)×13.80mm (T)
Installation Dimensions	Positioning hole: 106.50(+0.3mm)×68.30(+0.3mm)
Net Weight	105g

Packaging Standards

Model	Dimensions	Layer	Quantity/Layer	Quantity(Pcs)
Carton1：	220mm(L)×160mm(W)×47mm (H)	1	2	2
Carton2：	250mm(L)×200mm(W)×80mm (H)	1	4	4
Carton3：	320mm(L)×270mm(W)×80mm (H)	1	8	8
Carton4：	450mm(L)×350mm(W)×300mm(H)	2	30	60
Carton5：	600mm(L)×450mm(W)×300mm(H)	2	60	120

DWIN Technology Technical Document

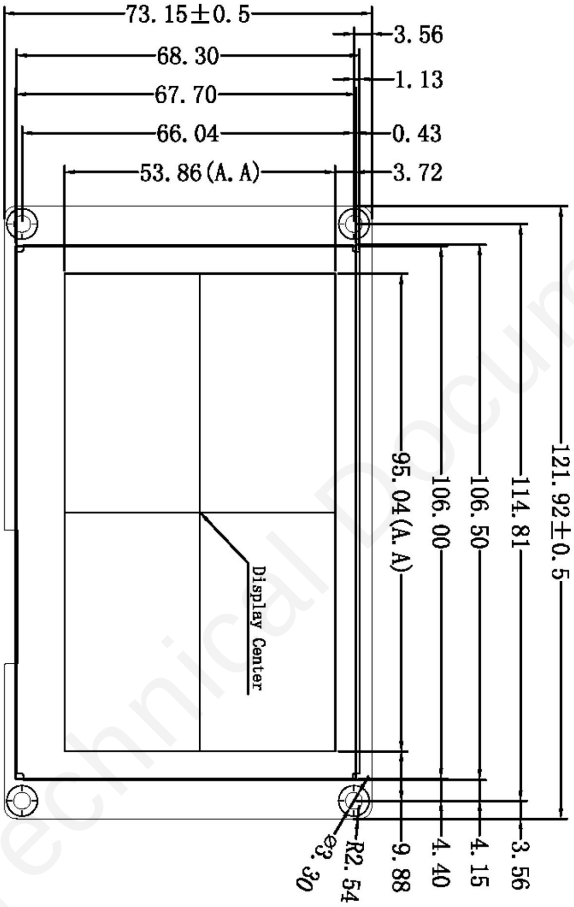

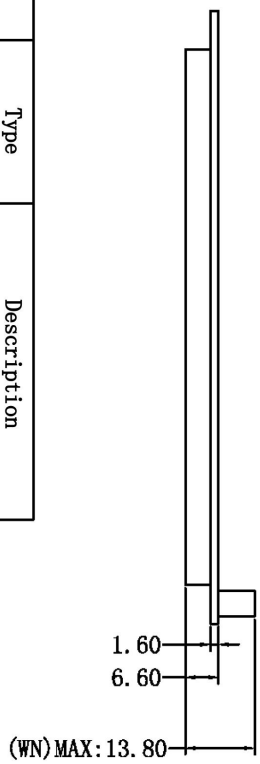

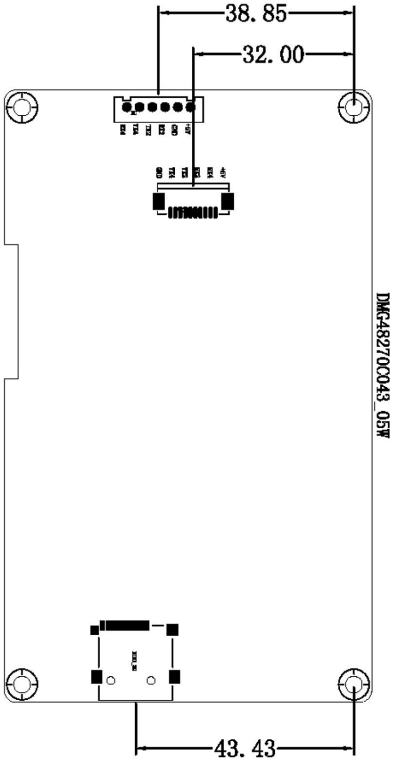

Definition	Pin#	Type	Description
GND	8,9,10	P	GND
TX4	7	O	UART4 Output
TX2	6	O	UART2 Output
RX2	5	I	UART2 Input
RX4	4	I	UART4 Input
+5V	1,2,3	P	Power Input

1. Location hole is used as position reference.
2. Unmarked tolerance is +/-0.3mm.

Note: Active area is marked in dash lines.

Model	DMG48270C043_05WN			
Drawing	A 4	Drawn	G.Y	Date 2021.09.13
Scale	1:1	Review		Date
Unit	MM	Approval		Date

DWIN Technology

DWIN Technology Technical Document

5. Debugging tools

It is recommended for new users of DWIN smart LCMs to purchase official accessories. For more details, please refer to customer service center.

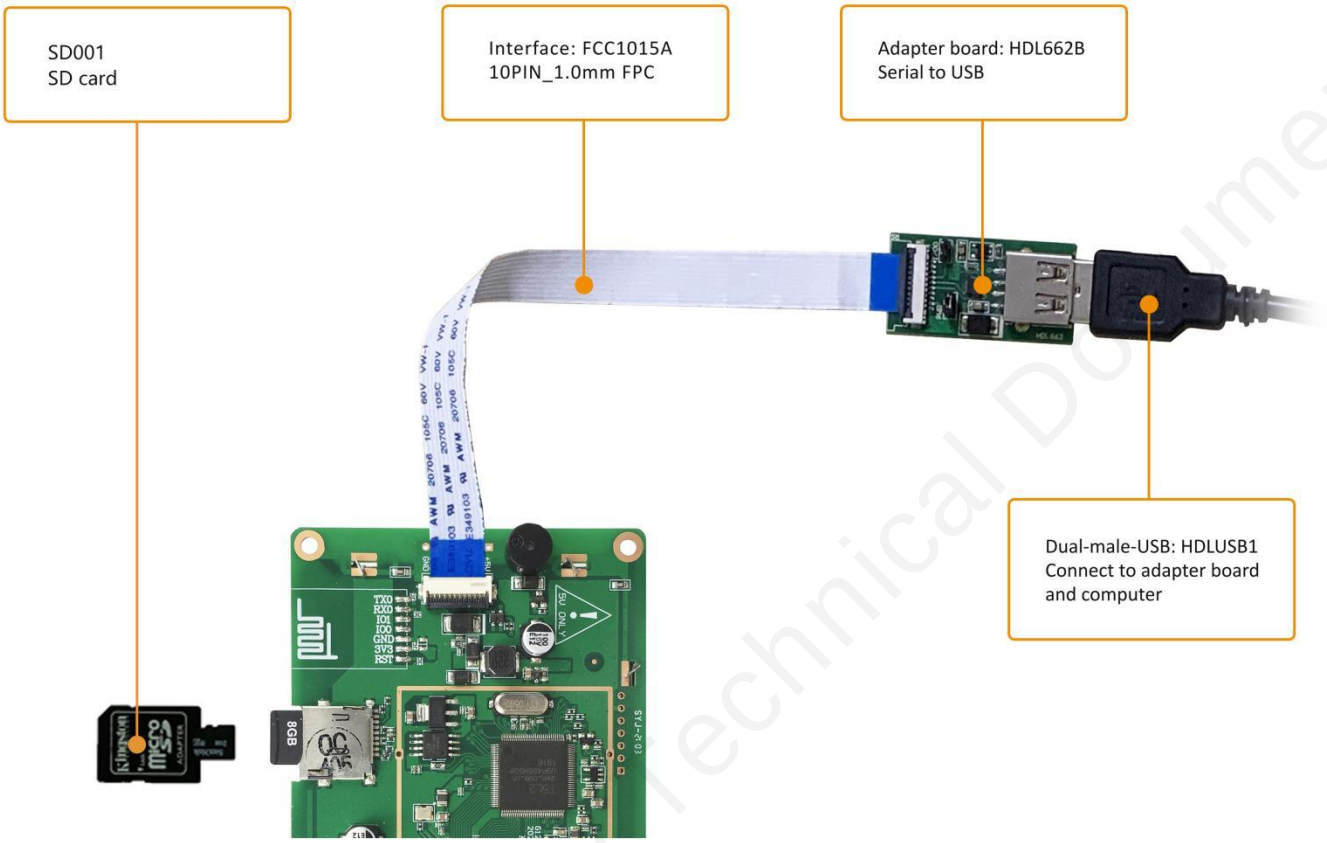

DWIN Technology Technical Document

6. T5L series IC features

(1) Mature and stable 8051 core which is the most widely used with the maximum operating frequency of T5L is up to 250MHz, 1T(single instruction cycle)high speed operation.

(2) Separate GUI CPU Core running DGUS II System:

- High-speed display memory, 2.4GB/S bandwidth.
- 2D hardware acceleration, the decompression speed of JPEG is up to 200fps@1280*800 and the UI with animation and icons as its main feature is extremely cool and smooth.
- Images and icons stored in JPEG format. Adopt Low-cost 16Mbytes SPI Flash.
- Support CTP or RTP with adjustable sensitivity and maximum 400 Hz touch frequency.
- 1-way 15bit 32Ksps PWM digital power amplifier driver loudspeaker, save power amplifier cost and achieve high signal-to-noise ratio and sound quality restoration.
- 128Kbytes variable storage space for exchanging data with OS CPU Core and memory.
- Support DGUS development and simulation on PC. Support background remote upgrade.

(3) Separate CPU (OS CPU) core runs user 8051 code or DWIN OS system and user CPU is omitted in practical application:

- Standard 8051 architecture and instruction set, 64Kbytes code space, 32Kbytes on-chip RAM.
- 64 bit integer mathematical operation unit (MDU), including 64 bit MAC and 64 bit divider.
- 28 IOs, 4-channel UARTs, 1-channel CAN, up to 8-channel 12-bit A/Ds and 2-channle 16-bit PWM of adjustable resolution.
- Support IAP on-line simulation and debugging with unlimited number of breakpoints.
- Upgrade code online through DGUS system.

(4) 1Mbytes on-chip Flash with DWIN patent encryption technology ensure code and data security.

(5) Operating temperature ranges from -40°C to +85°C(IC operating temperature customizable from -55°C to 105°C).

DWIN encourages users to design your own customized product based on T5L

DWIN Technology Technical Document

7. Revision records

Rev	Revise Date	Content	Editor
00	2024-08-27	First Edition	Xu Ying

Please contact us if you have any questions about the use of this document or our products, or if you would like to know the latest information about our products:

- Customer service Tel: +86 400 018 9008
- Customer service email: dwinhmi@dwin.com.cn
- DWIN Developer Forum: https://forums.dwin-global.com/

Thank you all for continuous support of DWIN, and your approval is the driving force of our progress!

DWIN Technology Technical Document

Important Disclaimer

DWIN reserves the right to make any changes to product designs without prior notice.

Customers should ensure strictly adhering to all the relevant standards and requirements during the product application process, including but not limited to functional safety, information security, and regulatory provisions.

DWIN shall not bear any joint and several liability for any consequences that may arise from customers' adoption of DWIN products. In particular, for risks that may lead to significant property losses, environmental hazards, personal injury, or even death, especially in high-risk application areas such as military applications, flammable and explosive places, and life-saving medical equipment, customers should independently assess the risks and take corresponding preventive and protective measures. DWIN shall not bear any relevant responsibility.

DWIN Technology Technical Document