OptoSupply
Light It Up

Rocketed Type Pure Green LED

OSPG5AA1B

■Features

- High Luminous LEDs
- 5mm Rocket Standard Directivity
- UV Resistant Epoxy
- Water Clear Type

■Applications

- Toys & Games
- Decoration
- General Use

■Outline Dimension

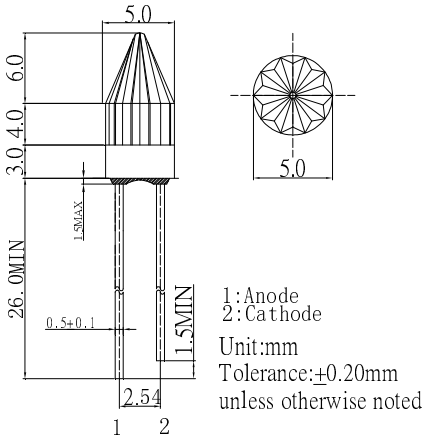

■Absolute Maximum Rating (Ta=25℃)

Item	Symbol	Value	Unit
DC Forward Current	I_F	30	mA
Pulse Forward Current#	I_{FP}	100	mA
Reverse Voltage	V_R	5	V
Power Dissipation	P_D	108	mW
Operating Temperature	Topr	-30 ~ +85	℃
Storage Temperature	Tstg	-40~ +100	℃
Lead Soldering Temperature	Tsol	260℃/5sec	-

#Pulse width Max.10ms Duty ratio max 1/10

■Directivity

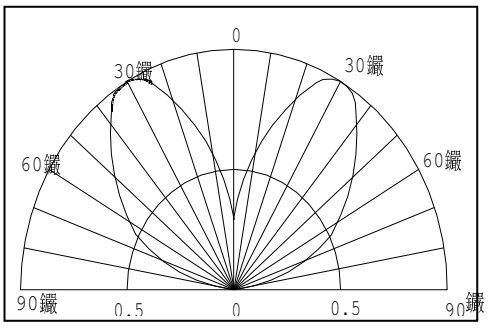

■Electrical -Optical Characteristics (Ta=25℃)

Item	Symbol	Condition	Min.	Typ.	Max.	Unit
DC Forward Voltage*1	V_F	I_F=20mA	-	3.1	3.6	V
DC Reverse Current	I_R	V_R=5V	-	-	10	μA
Domi. Wavelength*2	λ_D	I_F=20mA	520	525	530	nm
Luminous Intensity*3	Iv	I_F=20mA	1560	2180	3000	mcd
50% Power Angle	$2\theta_{1/2}$	I_F=20mA	-	130	-	deg

*1 Tolerance of measurements of forward voltage is±0.1V
*2 Tolerance of measurements of dominant wavelength is ±1nm
*3 Tolerance of measurements of luminous intensity is ±15%

LED & Application Technologies

ISO 9001: 2008

ATTENTION
OBSERVE PRECAUTIONS
ELECTROSTATIC
SENSITIVE DEVICES

sales@prom-elec.com / ООО ПРОМЭЛЕКТРОНИКА