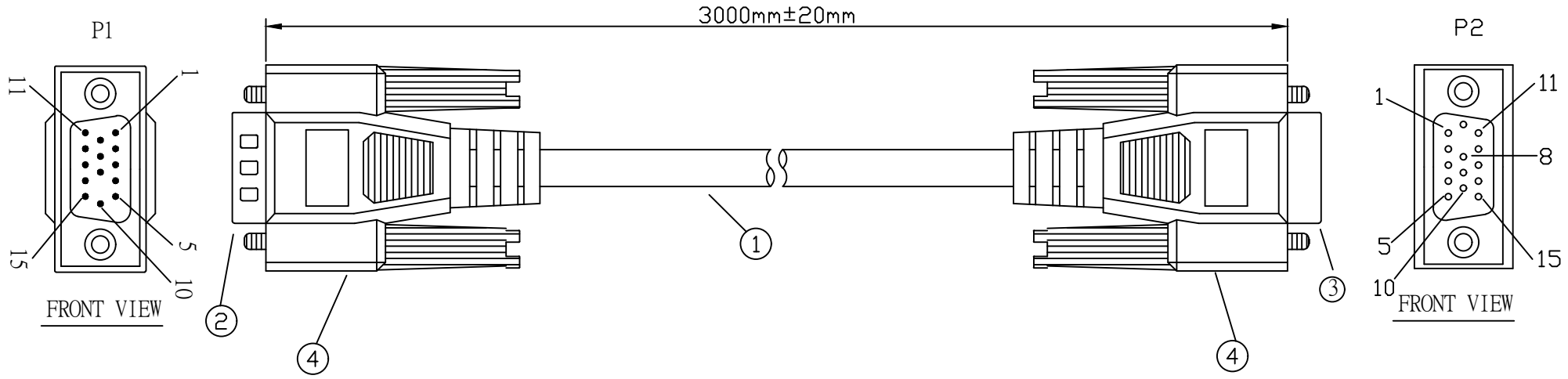

1.CABLE:NO UL 14C+1.((28AWG,7/0.12mm±0.008)x14C
SHIELD:DRAIN WIRE+AL/MY COVERAGE
JACKET:PVC,COMPLIANCE ROHS,COLOR:BEIGE,O.D:6mm±0.2mm
2.CONNECTOR:2 PCS HDD15 PIN MALE SOLDER TYPE CONNECTOR
SHELL:NICKEL PLATED
3.CONNECTOR:2 PCS HDD15 PIN FEMALE SOLDER TYPE CONNECTOR
SHELL:NICKEL PLATED
4.HOOD:PVC MOLDED TYPE WITH AL-FOIL SHIELDED ON INNER
MOLD INJECTION OUTER MOLD WITH THUMB SCREW#4-40UNC
HOOD COLOR IS BEIGE,COMPLIANCE ROHS
5.Fulfill ROHS Guideline
6.ELECTRONIC TEST: 100% OPEN SHORT+MISS WIRE TEST

DRAWING

HDD15PIN PLUG(P1)	WIRE	HDD15PIN JACK(P2)
1	———	1
2	———	2
3	———	3
4	———	4
5	———	5
6	———	6
7	———	7
8	———	8
10	———	10
11	———	11
12	———	12
13	———	13
14	———	14
15	———	15
SHELL	D.W	SHELL

PART NO	C-15GW/3	SHEET NO	1
TITLE: HDD15 PIN PLUG TO HDD15 PIN JACK BEIGE COLOR,L:3M			
DWN NO	D-C-15GW/3		

THIRD ANGLE PROJECTION
SCALE N.T.S
SIZE A4
UNIT
☑ mm ☐ INCH
DRAWN BY & DATE
CHECKED BY & DATE
APPROVED BY & DATE

有限公司 得望股份
NEWMAN, HOPE & CO.INC
TEL:886-2-28765517 FAX:886-2-28765527
E-MAIL: sales@newmanhope.com.tw

sales@prom-elec.com / ООО ПРОМЭЛЕКТРОНИКА