Dual Common-Cathode Ultrafast Rectifier

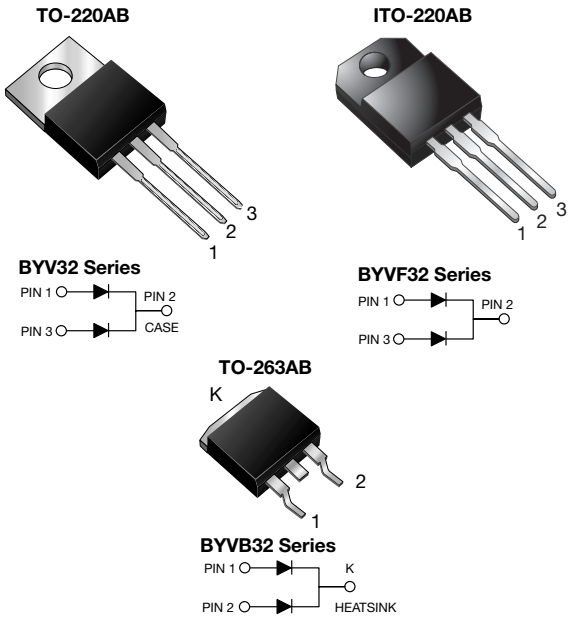

FEATURES

- Power pack
- Glass passivated chip junction
- Ultrafast recovery time
- Low switching losses, high efficiency
- Low forward voltage drop
- High forward surge capability
- Meets MSL level 1, per J-STD-020, LF maximum peak of 245 °C (for TO-263AB package)
- Solder dip 275 °C max. 10 s, per JESD 22-B106 (for TO-220AB and ITO-220AB package)
- AEC-Q101 qualified
- Material categorization: For definitions of compliance please see www.vishay.com/doc?99912

Pb e3 RoHS COMPLIANT

TYPICAL APPLICATIONS

For use in high frequency rectifier of switching mode power supplies, inverters, freewheeling diodes, DC/DC converters, and other power switching application.

PRIMARY CHARACTERISTICS	
$I_{F(AV)}$	18 A
V_{RRM}	50 V to 200 V
I_{FSM}	150 A
t_{rr}	25 ns
V_F	0.85 V
T_J max.	150 °C
Package	TO-220AB, ITO-220AB, TO-263AB
Diode variations	Common cathode

MECHANICAL DATA

Case: TO-220AB, ITO-220AB, TO-263AB
Molding compound meets UL 94 V-0 flammability rating
Base P/N-E3 - RoHS-compliant, commerical grade
Base P/NHE3 - RoHS-compliant, AEC-Q101 qualified

Terminals: Matte tin plated leads, solderable per J-STD-002 and JESD 22-B102
E3 suffix meets JESD 201 class 1A whisker test, HE3 suffix meets JESD 201 class 2 whisker test

Polarity: As marked

Mounting Torque: 10 in-lbs max.

MAXIMUM RATINGS (T_C = 25 °C unless otherwise noted)

PARAMETER	SYMBOL	BYV32-50	BYV32-100	BYV32-150	BYV32-200	UNIT
Maximum repetitive peak reverse voltage	V_{RRM}	50	100	150	200	V
Maximum RMS voltage	V_{RMS}	35	70	105	140	V
Maximum DC blocking voltage	V_{DC}	50	100	150	200	V
Maximum average forward rectified current at T_C = 125 °C	$I_{F(AV)}$	18				A
Peak forward surge current 8.3 ms single half sine-wave superimposed on rated load per diode	I_{FSM}	150				A
Operating storage and temperature range	T_J, T_{STG}	- 65 to + 150				°C
Isolation voltage (ITO-220AB only) from terminal to heatsink t = 1 min	V_{AC}	1500				V

For technical questions within your region: DiodesAmericas@vishay.com, DiodesAsia@vishay.com, DiodesEurope@vishay.com
THIS DOCUMENT IS SUBJECT TO CHANGE WITHOUT NOTICE. THE PRODUCTS DESCRIBED HEREIN AND THIS DOCUMENT ARE SUBJECT TO SPECIFIC DISCLAIMERS, SET FORTH AT www.vishay.com/doc?91000

sales@prom-elec.com / ООО ПРОМЭЛЕКТРОНИКА

ELECTRICAL CHARACTERISTICS (T_C = 25 °C unless otherwise noted)								
PARAMETER	**TEST CONDITIONS**		**SYMBOL**	**BYV32-50**	**BYV32-100**	**BYV32-150**	**BYV32-200**	**UNIT**
Maximum instantaneous forward voltage per diode	I_F = 20 A	T_J = 25 °C	V_F (1)	1.15				V
	$_F$ = 5.0 A	T_J = 100 °C		0.85				
Maximum DC reverse current per diode at rated DC blocking voltage		T_J = 25 °C	I_R	10				µA
		T_J = 100 °C		600				
Maximum reverse recovery time per diode	I_F = 1 A, V_R = 30 V dI/dt = 100 A/µs, I_{rr} = 10 % I_{RM}		t_{rr}	25				ns
Typical junction capacitance per diode	4.0 V, 1 MHz		C_J	45				pF

Note

(1) Pulse test: 300 µs pulse width, 1 % duty cycle

THERMAL CHARACTERISTICS (T_C = 25 °C unless otherwise noted)					
PARAMETER	**SYMBOL**	**BYV**	**BYVF**	**BYVB**	**UNIT**
Typical thermal resistance from junction to case per diode	$R_{\theta JC}$	1.6	5.0	1.6	°C/W

ORDERING INFORMATION (Example)					
PACKAGE	**PREFERRED P/N**	**UNIT WEIGHT (g)**	**PACKAGE CODE**	**BASE QUANTITY**	**DELIVERY MODE**
TO-220AB	BYV32-200-E3/45	1.85	45	50/tube	Tube
ITO-220AB	BYVF32-200-E3/45	1.97	45	50/tube	Tube
TO-263AB	BYVB32-200-E3/45	1.35	45	50/tube	Tube
TO-263AB	BYVB32-200-E3/81	1.35	81	800/reel	Tape and reel
TO-220AB	BYV32-200HE3/45 (1)	1.85	45	50/tube	Tube
ITO-220AB	BYVF32-200HE3/45 (1)	1.97	45	50/tube	Tube
TO-263AB	BYVB32-200HE3/45 (1)	1.35	45	50/tube	Tube
TO-263AB	BYVB32-200HE3/81 (1)	1.35	81	800/reel	Tape and reel

Note

(1) AEC-Q101 qualified

For technical questions within your region: DiodesAmericas@vishay.com, DiodesAsia@vishay.com, DiodesEurope@vishay.com
THIS DOCUMENT IS SUBJECT TO CHANGE WITHOUT NOTICE. THE PRODUCTS DESCRIBED HEREIN AND THIS DOCUMENT ARE SUBJECT TO SPECIFIC DISCLAIMERS, SET FORTH AT www.vishay.com/doc?91000

RATINGS AND CHARACTERISTICS CURVES

(T_A = 25 °C unless otherwise noted)

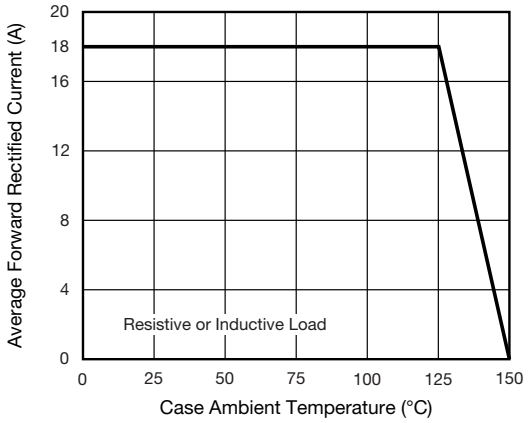

Fig. 1 - Forward Current Derating Curve

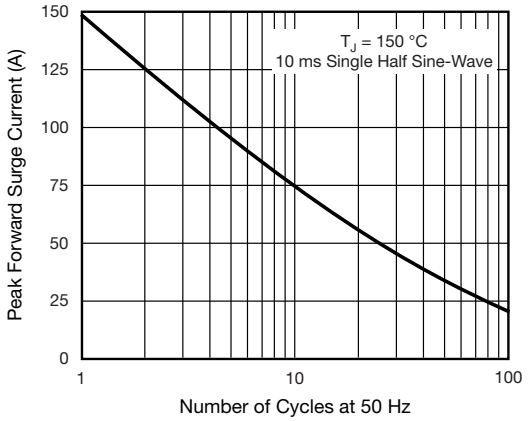

Fig. 2 - Maximum Non-Repetitive Peak Forward Surge Current Per Diode

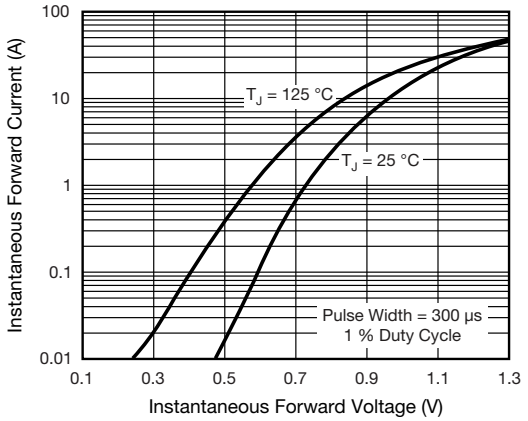

Fig. 3 - Typical Instantaneous Forward Characteristics Per Diode

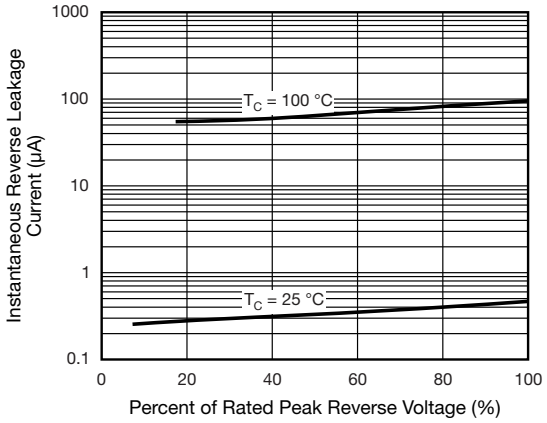

Fig. 4 - Typical Reverse Leakage Characteristics Per Diode

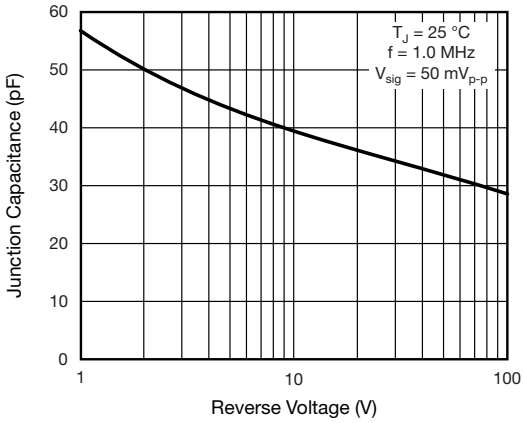

Fig. 5 - Typical Junction Capacitance Per Diode

For technical questions within your region: DiodesAmericas@vishay.com, DiodesAsia@vishay.com, DiodesEurope@vishay.com
THIS DOCUMENT IS SUBJECT TO CHANGE WITHOUT NOTICE. THE PRODUCTS DESCRIBED HEREIN AND THIS DOCUMENT ARE SUBJECT TO SPECIFIC DISCLAIMERS, SET FORTH AT www.vishay.com/doc?91000

PACKAGE OUTLINE DIMENSIONS in inches (millimeters)

TO-220AB

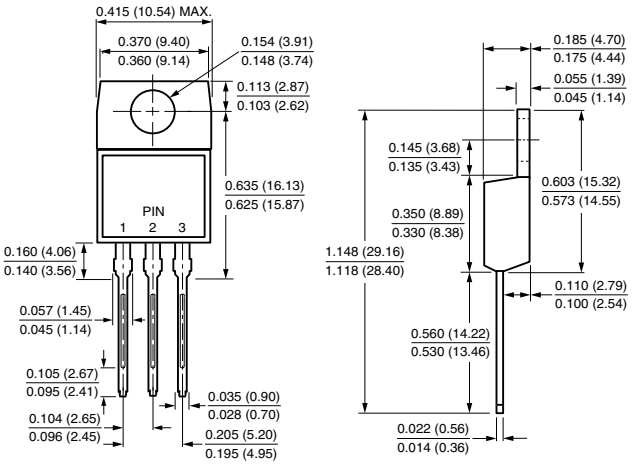

ITO-220AB

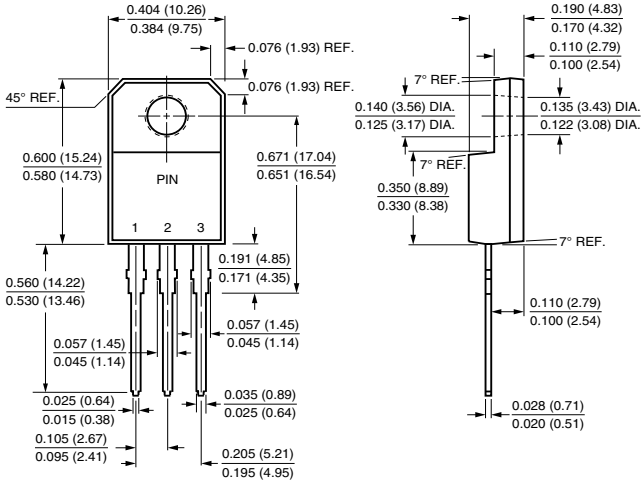

TO-263AB

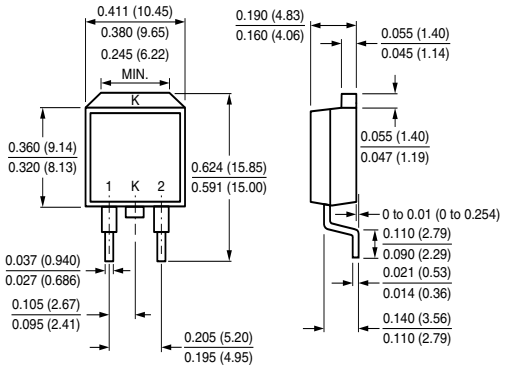

Mounting Pad Layout

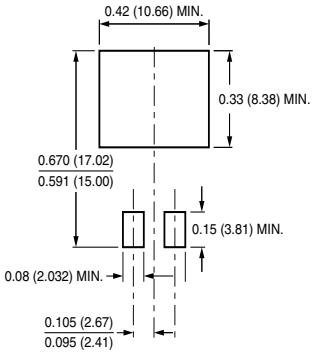

For technical questions within your region: DiodesAmericas@vishay.com, DiodesAsia@vishay.com, DiodesEurope@vishay.com
THIS DOCUMENT IS SUBJECT TO CHANGE WITHOUT NOTICE. THE PRODUCTS DESCRIBED HEREIN AND THIS DOCUMENT ARE SUBJECT TO SPECIFIC DISCLAIMERS, SET FORTH AT www.vishay.com/doc?91000

Disclaimer

ALL PRODUCT, PRODUCT SPECIFICATIONS AND DATA ARE SUBJECT TO CHANGE WITHOUT NOTICE TO IMPROVE RELIABILITY, FUNCTION OR DESIGN OR OTHERWISE.

Vishay Intertechnology, Inc., its affiliates, agents, and employees, and all persons acting on its or their behalf (collectively, "Vishay"), disclaim any and all liability for any errors, inaccuracies or incompleteness contained in any datasheet or in any other disclosure relating to any product.

Vishay makes no warranty, representation or guarantee regarding the suitability of the products for any particular purpose or the continuing production of any product. To the maximum extent permitted by applicable law, Vishay disclaims (i) any and all liability arising out of the application or use of any product, (ii) any and all liability, including without limitation special, consequential or incidental damages, and (iii) any and all implied warranties, including warranties of fitness for particular purpose, non-infringement and merchantability.

Statements regarding the suitability of products for certain types of applications are based on Vishay's knowledge of typical requirements that are often placed on Vishay products in generic applications. Such statements are not binding statements about the suitability of products for a particular application. It is the customer's responsibility to validate that a particular product with the properties described in the product specification is suitable for use in a particular application. Parameters provided in datasheets and/or specifications may vary in different applications and performance may vary over time. All operating parameters, including typical parameters, must be validated for each customer application by the customer's technical experts. Product specifications do not expand or otherwise modify Vishay's terms and conditions of purchase, including but not limited to the warranty expressed therein.

Except as expressly indicated in writing, Vishay products are not designed for use in medical, life-saving, or life-sustaining applications or for any other application in which the failure of the Vishay product could result in personal injury or death. Customers using or selling Vishay products not expressly indicated for use in such applications do so at their own risk. Please contact authorized Vishay personnel to obtain written terms and conditions regarding products designed for such applications.

No license, express or implied, by estoppel or otherwise, to any intellectual property rights is granted by this document or by any conduct of Vishay. Product names and markings noted herein may be trademarks of their respective owners.

Material Category Policy

Vishay Intertechnology, Inc. hereby certifies that all its products that are identified as RoHS-Compliant fulfill the definitions and restrictions defined under Directive 2011/65/EU of The European Parliament and of the Council of June 8, 2011 on the restriction of the use of certain hazardous substances in electrical and electronic equipment (EEE) - recast, unless otherwise specified as non-compliant.

Please note that some Vishay documentation may still make reference to RoHS Directive 2002/95/EC. We confirm that all the products identified as being compliant to Directive 2002/95/EC conform to Directive 2011/65/EU.

Vishay Intertechnology, Inc. hereby certifies that all its products that are identified as Halogen-Free follow Halogen-Free requirements as per JEDEC JS709A standards. Please note that some Vishay documentation may still make reference to the IEC 61249-2-21 definition. We confirm that all the products identified as being compliant to IEC 61249-2-21 conform to JEDEC JS709A standards.