Interface Connectors for Portable Terminal Devices

ST Series

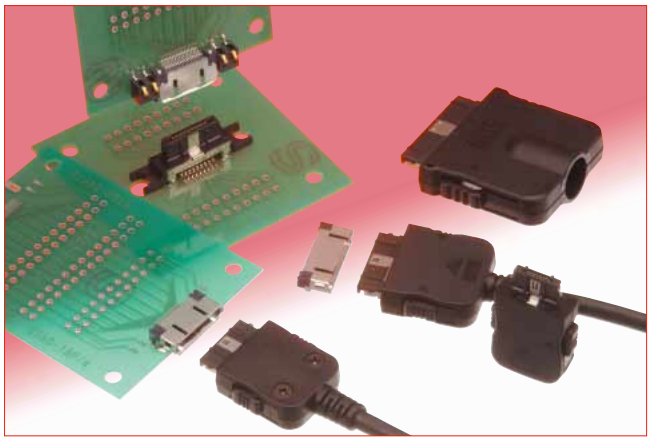

■Overview

The ST Series interface connectors are specifically designed for use as Input/Output (I/O) connectors on portable information devices. They feature a unique structure with high strength which resists deformation and helps to prevent improper mating.
3.0 mm height and 0.5 mm contact pitch connector prevents EMI as well.
The ST Series can be used in wide range of applications such as DSC, PDA, laptop PCs, cellular phones, etc.

■Features

1. Strong locking mechanism

To assure continuous reliability of the connection in an unpredictable consumer environment, mated connectors will withstand pull force of 49N max. applied in any direction. (Fig.1)

2. Prevention against reversed or angle insertion

Multiple polarization keys will not allow incorrect insertion of the mating plug.
In addition, contacts will not be damaged when the user attempts to insert only the corner of the mating plug. (Fig.2)

3. Optimal I/F for Small Devices

Plugs are 8 mm in height and 20 mm long (including covers), which is appropriate for small devices.
Receptacles feature the low height of 3 mm and the contact pitch of 0.5 mm. Their small size saves valuable space and contributes to a smaller device set.

4. Multiple Variations

A wide variations is available for supporting different types of peripheral devices. Examples include shielded plugs for data communication, non-shielded plugs for power charge, reversed plug types as shown in Fig.3 and cradle type connectors.

5. Cable Options

This connector uses a solder type termination, which allows you to apply flexible cable types.

■Applications

Digital Still Cameras, Personal Digital Assistance, Notebook computers, Cellular phones, Smart phones and other portable devices requiring high reliability small size input/output connection.

Strong locking mechanism

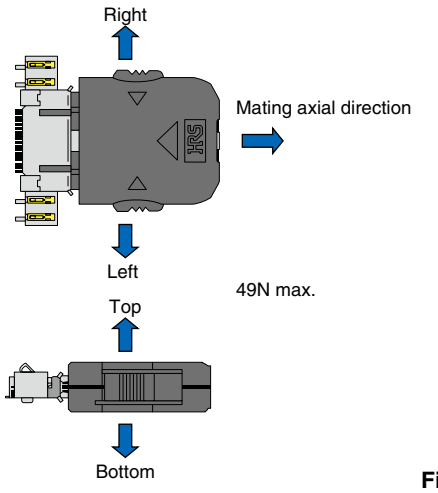

Fig.1

Prevention against reversed or angle insertion

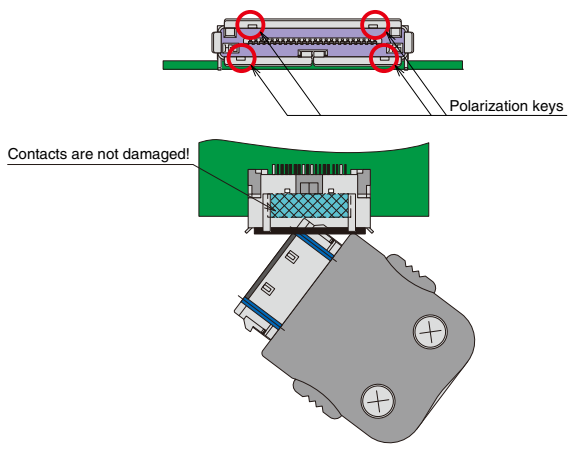

Fig.2

Plug variations

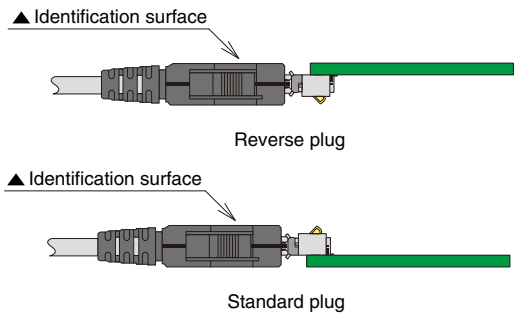

Fig.3

Dec.1.2024 Copyright 2024 HIROSE ELECTRIC CO., LTD. All Rights Reserved.

sales@prom-elec.com / ООО ПРОМЭЛЕКТРОНИКА

■Product Specifications

Rating	Current rating 0.5A (1 A max. can be carried via 4 random contacts)	Operating temperature range : -30℃ to +80℃
	Voltage rating 100V AC	Storage temperature range : -40℃ to +85℃ (Note)

Characteristic	Specification	Conditions
1. Contact resistance	60mΩ max.	100mA DC
2. Insulation resistance	1,000MΩ min.	250V DC
3. Dielectric withstanding voltage	No flashover or insulation breakdown.	350V AC/ 1 minute
4. Mating/un-mating forces	Mating : 29.4N max.	With corresponding connector.
5. Durability (mating/un-mating)	Contact resistance : 100mΩ max.	10,000 cycles
6. Shock	No electrical discontinuity of 10μ sec. max.	Acceleration of 490 m/s², 11 ms duration, sine half-wave waveform, 3 cycles in each of the 3 axis.
7. Temperature cycle	Contact resistance : 100mΩ max. Insulation resistance : 1,000MΩ min.	Temperature : -55℃ → +5℃ to +35℃ → +85℃ → +5℃ to +35℃ Time (Minutes) : 30 → 5 → 30 → 5 5 cycles
8. Salt spray	No corrosions	5±1% salt water solution at 35±3℃ for 48 hours, after washing without salt, leave for 24 hours at room temperature
9. Lock strength	Fully inserted and locked corresponding connector. No physical damage or electrical failure.	Pull force : 49N max. applied in each of the 4 axis.
10. Vibration	No electrical discontinuity of 10μ sec. max.	Frequency : 10 to 55 Hz, single amplitude of 0.75mm, 2 hours, 3 axis.

Note: Includes temperature rise caused by current flow.

■Materials / Finish

● Receptacles and cradles

Component	Material	Finish	Remarks
Insulator	Thermoplastic compound, glass reinforced	Color: Black	UL94V-0
Contacts	Copper alloy	Contact area: Gold plated	————
Shield	Stainless steel	Tin alloy plating	————

● Plugs

Component	Material	Finish	Remarks
Insulator	Thermoplastic compound, glass reinforced	Color: Black	UL94V-0
Contacts	Copper alloy	Contact area: Gold plated	————
Shield	Stainless steel	————	————
Cover	Thermoplastic compound, glass reinforced	————	UL94V-0

■Product Number Structure

Refer to the chart below when determining the product specifications from the product number.
Please select from the product numbers listed in this catalog when placing orders.

● Receptacles

ST 60 - 18 P (30)
❶ ❷ ❹ ❺ ❼

● Plugs

ST 40 X - 18 S - CVR (30)
❶ ❷ ❸ ❹ ❺ ❻ ❼

● Plug - Cradle type

ST 80 X - 18 S (30)
❶ ❷ ❸ ❹ ❺ ❼

❶	Series name	: ST
❷	Termination type	
	60	: Right angle SMT
	40	: Solder type
	80	: Cradle, vertical, SMT
❸	Shield	
	X	: With shield
	Blank	: Without shield
❹	Number of contacts	
❺	Contact type	
	P	: Male contact (Receptacle)
	S	: Female contact (Plug)
❻	Plug type	
	CV	: Standard type, for top PCB mount
	CVR	: Reverse type, for bottom PCB mount
	CV1	: For larger diameter cables
❼	RoHS compliant	: (30)

Dec.1.2024 Copyright 2024 HIROSE ELECTRIC CO., LTD. All Rights Reserved.

■Receptacle

● 10 pos.

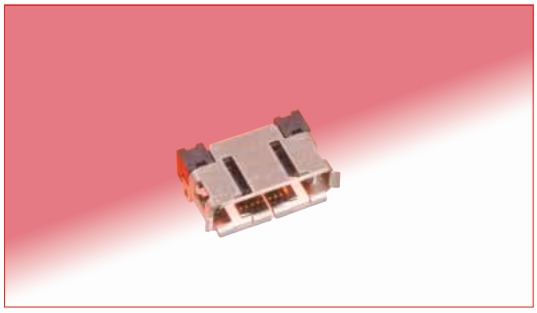

Part No.	HRS No.	Packaging	RoHS
ST60-10P(30)	241-0022-5 30	1,500pcs/reel	○

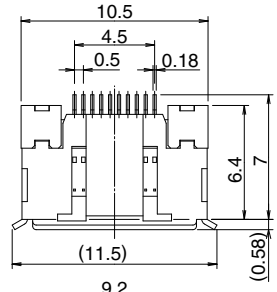

◆Recommended PCB mounting pattern

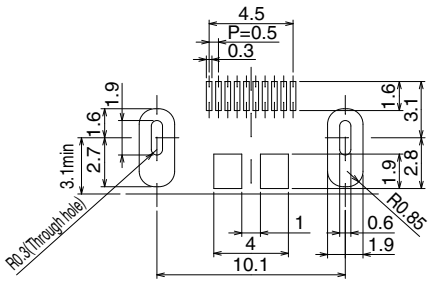

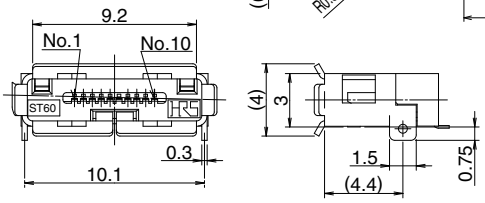

● 18 pos.

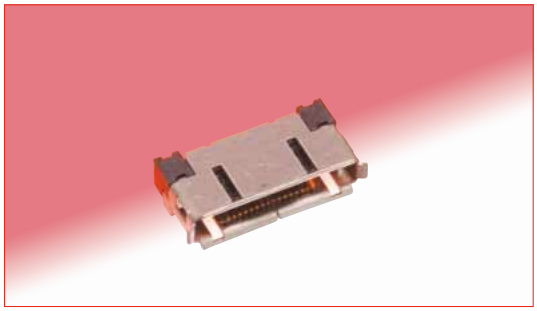

Part No.	HRS No.	Packaging	RoHS
ST60-18P(30)	241-0011-9 30	1,500pcs/reel	○

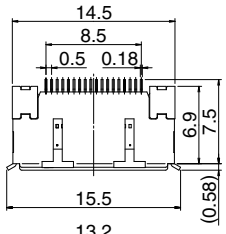

◆Recommended PCB mounting pattern

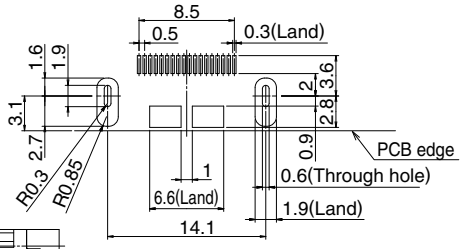

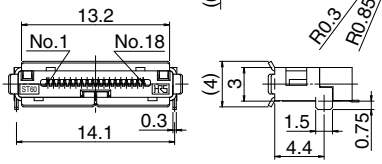

● 24 pos.

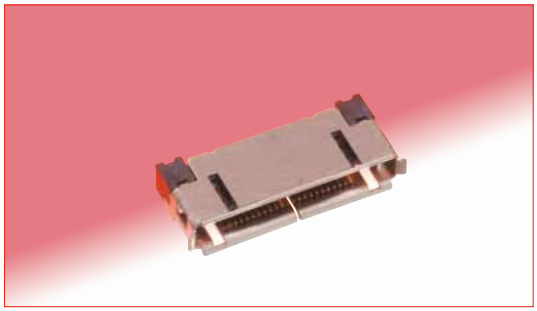

Part No.	HRS No.	Packaging	RoHS
ST60-24P(30)	241-0003-0 30	1,500pcs/reel	○

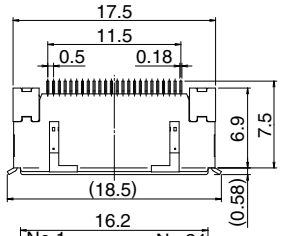

◆Recommended PCB mounting pattern

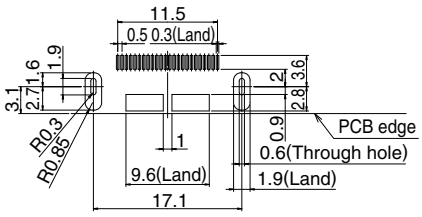

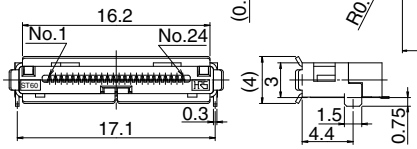

● 36 pos.

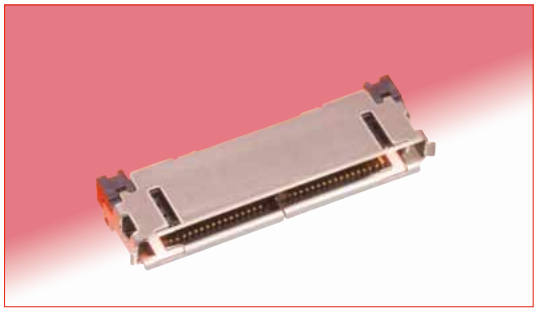

Part No.	HRS No.	Packaging	RoHS
ST60-36P(30)	241-0033-1 30	1,500pcs/reel	○

◆Recommended PCB mounting pattern

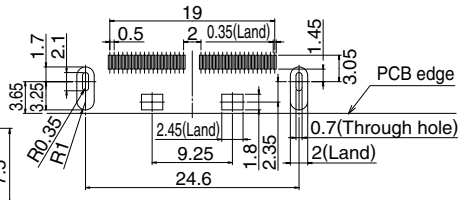

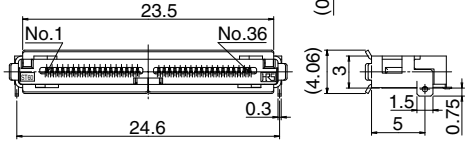

Dec.1.2024 Copyright 2024 HIROSE ELECTRIC CO., LTD. All Rights Reserved.

● 36 pos. reverse type

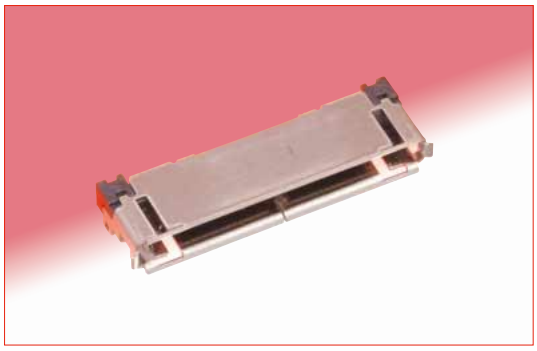

Part No.	HRS No.	Packaging	RoHS
ST60-36PR(30)	241-0036-0 30	1,500pcs/reel	○

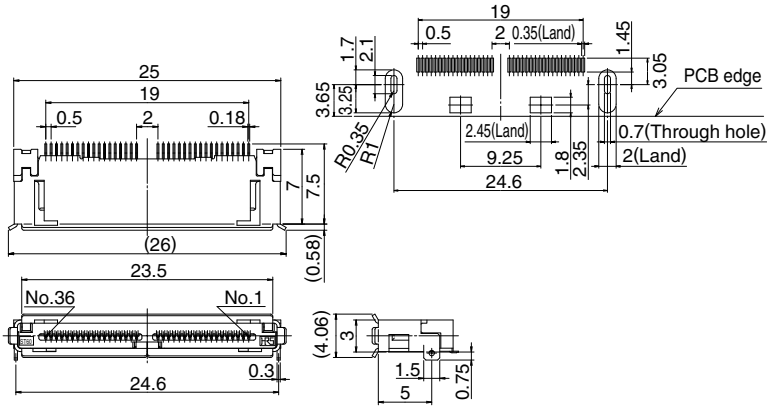

■Plug – cradle type(Horizontal)

● 18 pos.

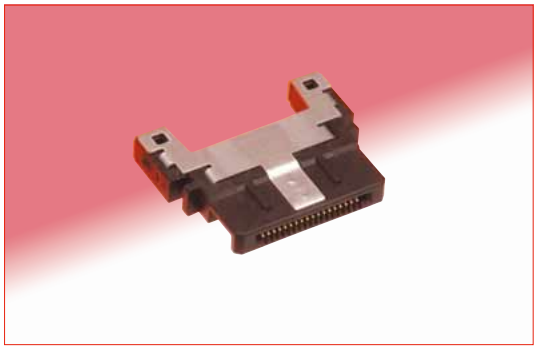

Part No.	HRS No.	Packaging	RoHS
ST60X-18S(30)	241-0028-1 30	900pcs/reel	○

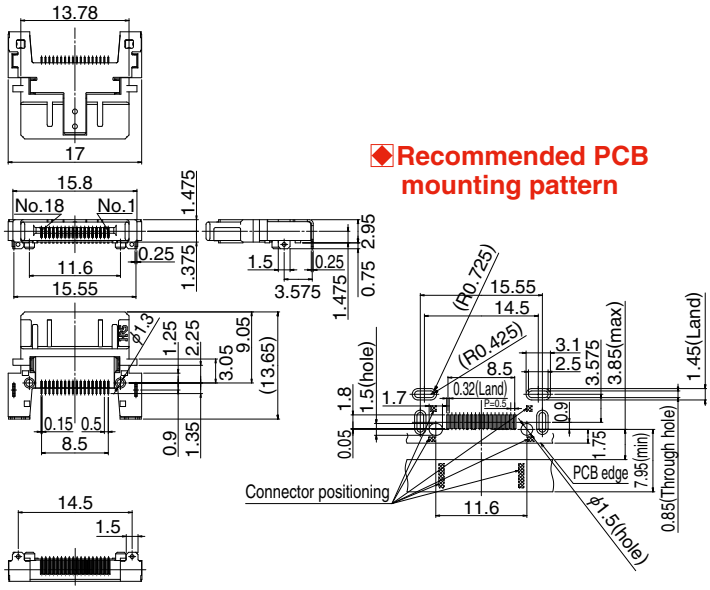

● 36 pos.

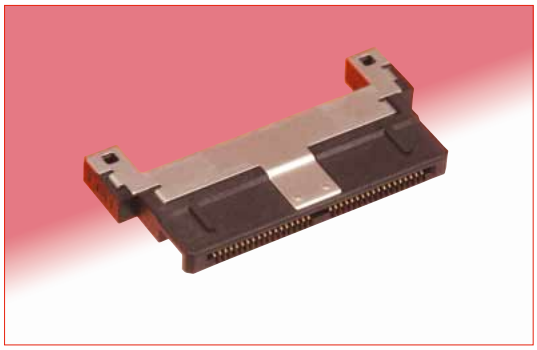

Part No.	HRS No.	Packaging	RoHS
ST60X-36S(30)	241-0035-7 30	900pcs/reel	○

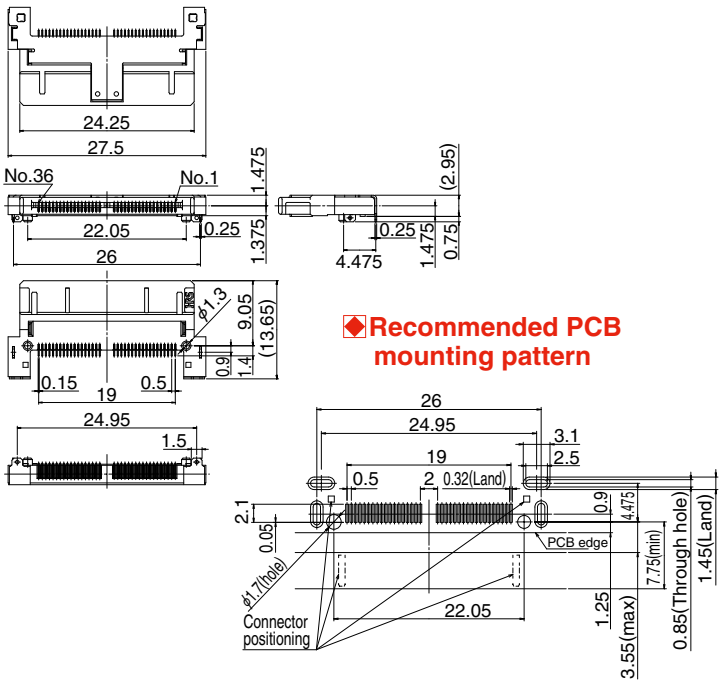

Dec.1.2024 Copyright 2024 HIROSE ELECTRIC CO., LTD. All Rights Reserved.

■Plug – cradle type(Vertical)

● 10 pos.

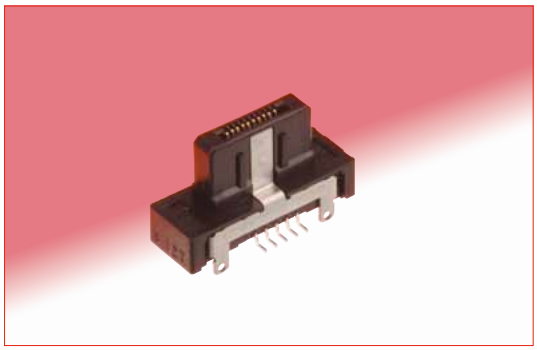

Part No.	HRS No.	Packaging	RoHS
ST80X-10S(30)	241-0030-3 30	400pcs/reel	○

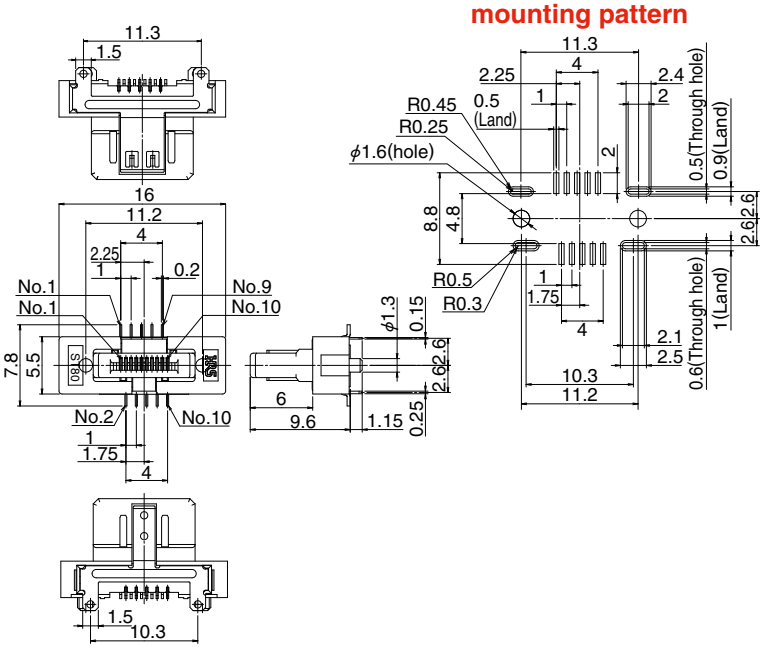

● 18 pos.

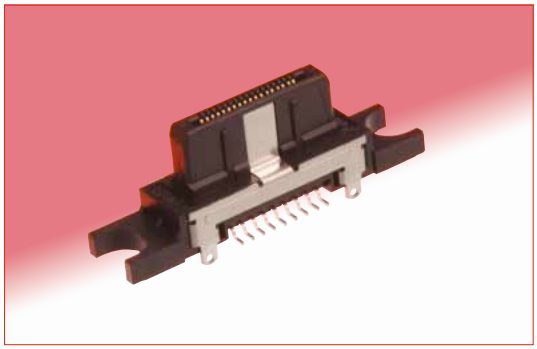

Part No.	HRS No.	Packaging	RoHS
ST80X-18S(30)	241-0020-0 30	400 pcs/reel	○

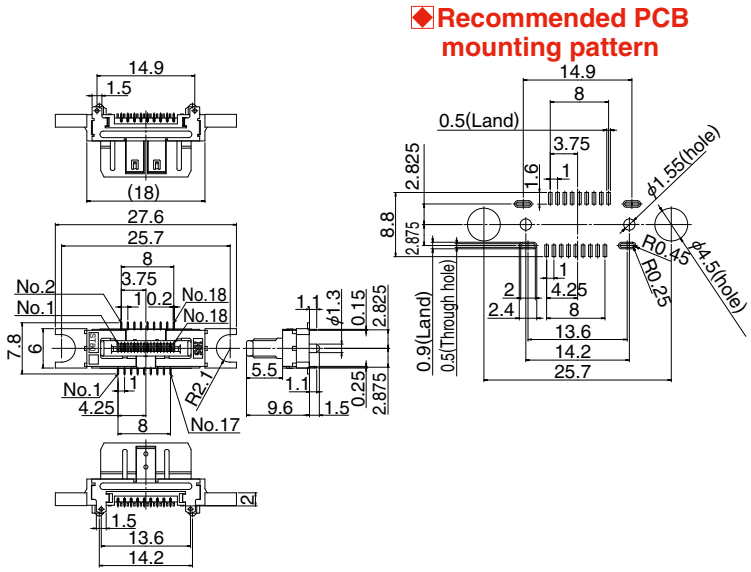

● 24 pos.

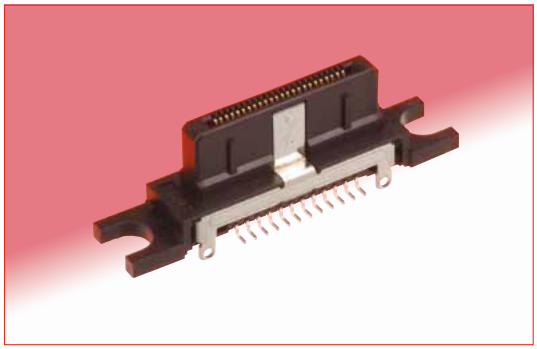

Part No.	HRS No.	Packaging	RoHS
ST80X-24S(30)	241-0037-2 30	400 pcs/reel	○

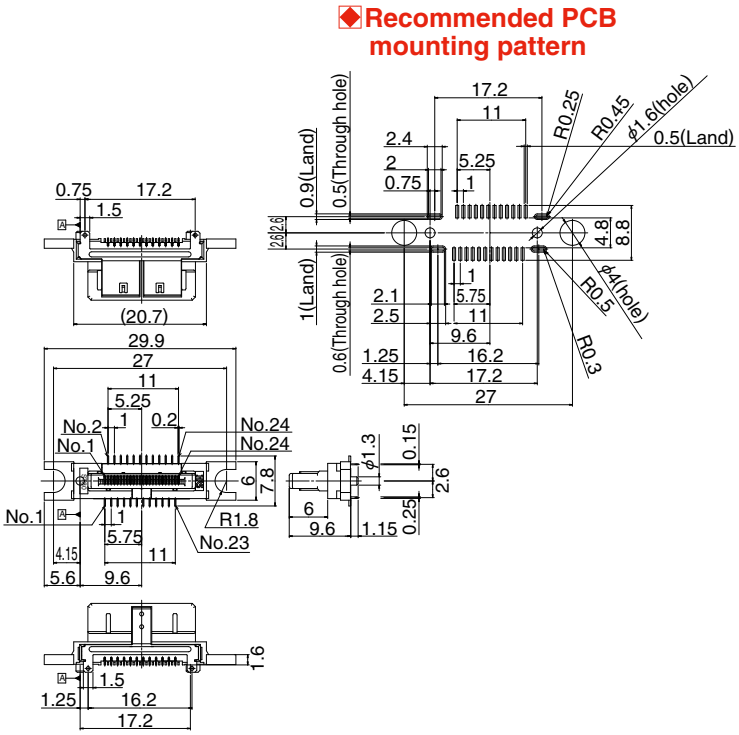

Dec.1.2024 Copyright 2024 HIROSE ELECTRIC CO., LTD. All Rights Reserved.

■Plug

● 10 pos. (Non-shielded type)

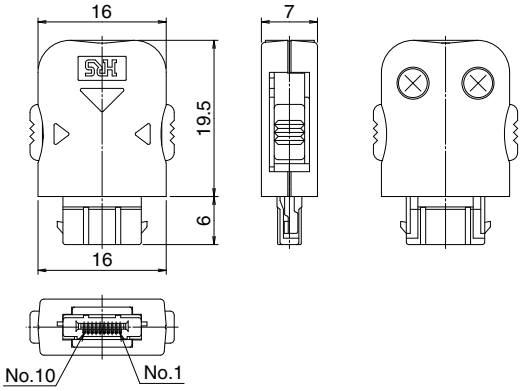

Part No.	HRS No.	Packaging	RoHS
ST40-10S-CV(30)	241-0021-2 30	1	○

● 10 pos. (Reverse, non-shielded type)

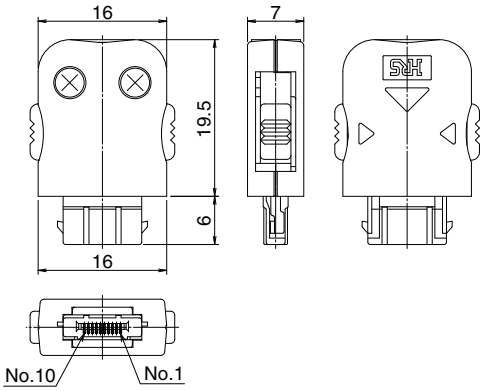

Part No.	HRS No.	Packaging	RoHS
ST40-10S-CVR(30)	241-0040-7 30	1	○

● 10 pos. (Shielded type)

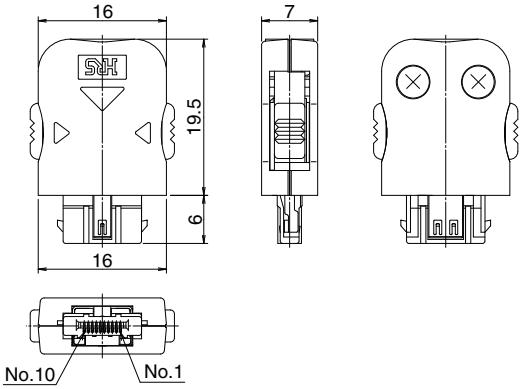

Part No.	HRS No.	Packaging	RoHS
ST40X-10S-CV(30)	241-0041-0 30	1	○

● 10 pos. (Reverse, shielded type)

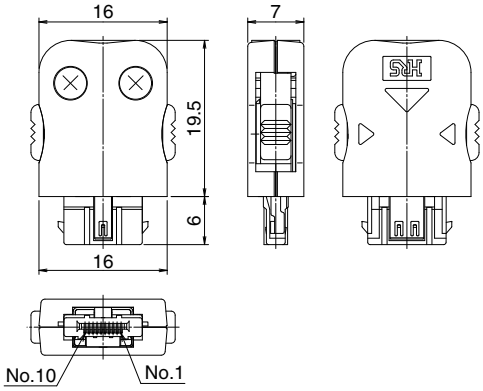

Part No.	HRS No.	Packaging	RoHS
ST40X-10S-CVR(30)	241-0029-4 30	1	○

Dec.1.2024 Copyright 2024 HIROSE ELECTRIC CO., LTD. All Rights Reserved.

● 18 pos. (Shielded type)

Part No.	HRS No.	Packaging	RoHS
ST40X-18S-CV(30)	241-0012-1 30	1	○

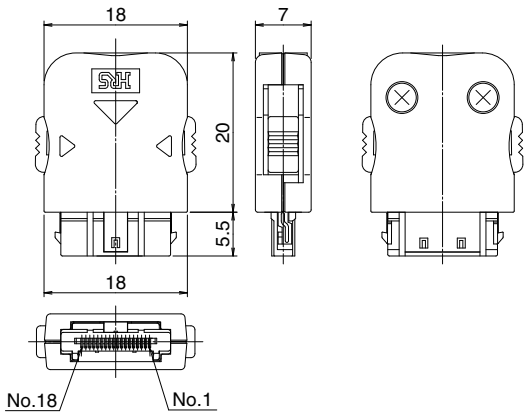

● 18 pos. (Reverse, shielded type)

Part No.	HRS No.	Packaging	RoHS
ST40X-18S-CVR(30)	241-0016-2 30	1	○

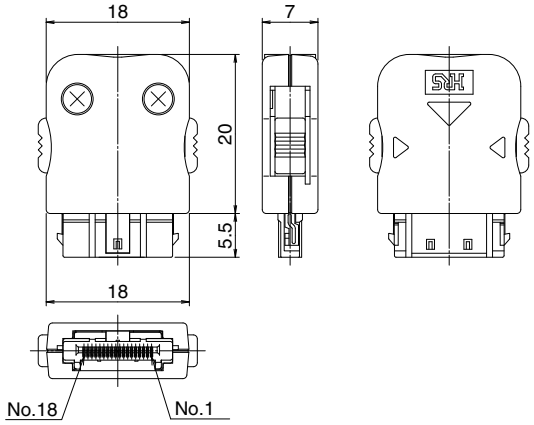

● 24 pos. (Shielded type)

Part No.	HRS No.	Packaging	RoHS
ST40X-24S-CV(30)	241-0004-3 30	1	○

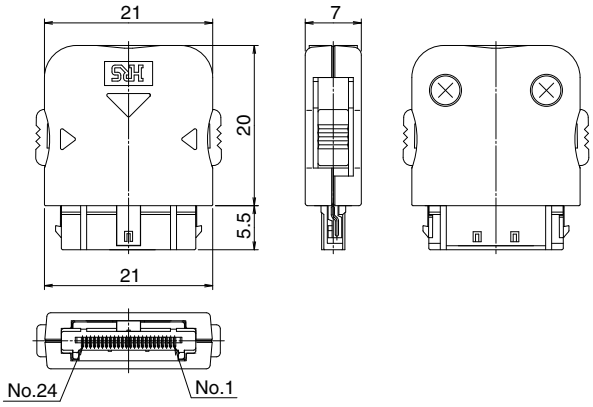

● 24 pos. (Shielded type)

Part No.	HRS No.	Packaging	RoHS
ST40X-24S-CV1(30)	241-0023-8 30	1	○

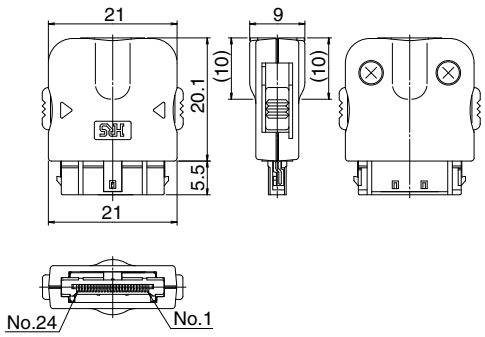

Dec.1.2024 Copyright 2024 HIROSE ELECTRIC CO., LTD. All Rights Reserved.

● 36 pos. (Shielded type)

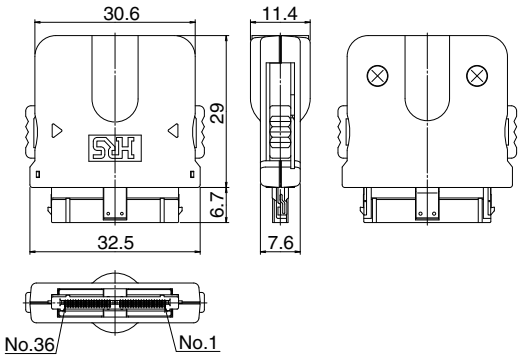

Part No.	HRS No.	Packaging	RoHS
ST40X-36S-CV(30)	241-0034-4 30	1	○

Note: Plug assemblies will require additional components. Contact Hirose Electric representative for detailed descriptions and installation instructions.

◆Packaging Specification

● Embossed Carrier Tape Dimensions

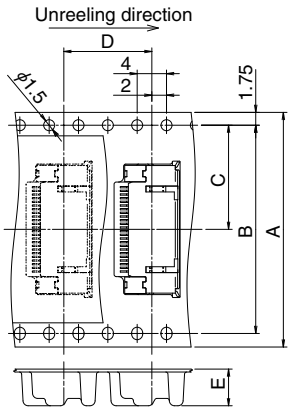

● Reel Dimensions

Part No.	A	B	C	D	E	pcs. / reel
ST60-10P(30)	24	—	11.5	12	5	1,500
ST60-18P(30)	24	—	11.5	12	5	1,500
ST60-24P(30)	32	28.4	14.2	12	5	1,500
ST60-36P(30)	44	40.4	20.2	12	5	1,500
ST60-36PR(30)	44	40.4	20.2	12	5	1,500
ST80X-10S(30)	24	—	11.5	16	12.2	400
ST80X-18S(30)	44	40.4	20.2	16	12.7	400
ST80X-24S(30)	44	40.4	20.2	16	12.7	400
ST60X-18S(30)	32	28.4	14.2	20	4.95	900
ST60X-36S(30)	44	40.4	20.2	20	4.85	900

● Reel Dimensions

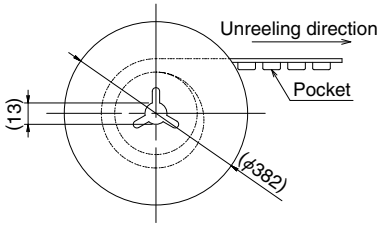

◆Recommended Temperature Profile (Lead-free soldering compound)

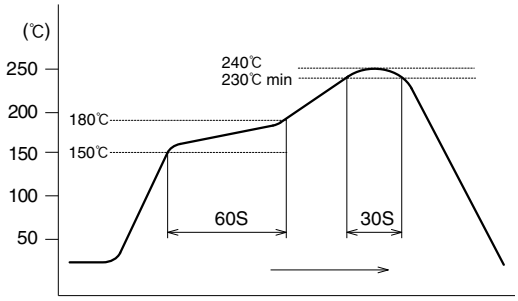

This measurement is performed on the contact lead section.
The temperature profile may vary due to external conditions such as the type of cream solder, manufacturer, and board size.
Please contact the solder manufacturer for their specifications.

HIROSE ELECTRIC CO.,LTD.
2-6-3,Nakagawa Chuoh,Tsuzuki-Ku,Yokohama-Shi 224-8540,JAPAN
TEL: +81-45-620-3526 Fax: +81-45-591-3726
http://www.hirose.com
http://www.hirose-connectors.com

Dec.1.2024 Copyright 2024 HIROSE ELECTRIC CO., LTD. All Rights Reserved.

The characteristics and the specifications contained herein are for reference purpose. Please refer to the latest customer drawings prior to use.
The contents of this catalog are current as of date of 09/2016. Contents are subject to change without notice for the purpose of improvements.