PD - 95229C

International
IOR Rectifier

# IRGB6B60KDPbF
# IRGS6B60KDPbF
# IRGSL6B60KDPbF

## INSULATED GATE BIPOLAR TRANSISTOR WITH ULTRAFAST SOFT RECOVERY DIODE

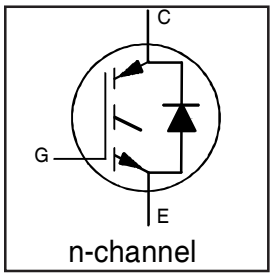


$V_{CES}$ = 600V

$I_C$ = 10A, $T_C$=100°C

$t_{sc}$ > 10µs, $T_J$=150°C

$V_{CE(on)}$ typ. = 1.8V

### Features

- Low VCE (on) Non Punch Through IGBT Technology.
- Low Diode VF.
- 10µs Short Circuit Capability.
- Square RBSOA.
- Ultrasoft Diode Reverse Recovery Characteristics.
- Positive VCE (on) Temperature Coefficient.
- Lead-Free

### Benefits

- Benchmark Efficiency for Motor Control.
- Rugged Transient Performance.
- Low EMI.
- Excellent Current Sharing in Parallel Operation.

TO-220AB IRGB6B60KDPbF | D²Pak IRGS6B60KDPbF | TO-262 IRGSL6B60KDPbF

### Absolute Maximum Ratings

| | Parameter | Max. | Units |
|---|---|---|---|
| $V_{CES}$ | Collector-to-Emitter Voltage | 600 | V |
| $I_C$ @ $T_C$ = 25°C | Continuous Collector Current | 18 | A |
| $I_C$ @ $T_C$ = 100°C | Continuous Collector Current | 10 | |
| $I_{CM}$ | Pulsed Collector Current | 26 | |
| $I_{LM}$ | Clamped Inductive Load Current④ | 26 | |
| $I_F$ @ $T_C$ = 25°C | Diode Continuous Forward Current | 18 | |
| $I_F$ @ $T_C$ = 100°C | Diode Continuous Forward Current | 10 | |
| $I_{FM}$ | Diode Maximum Forward Current | 26 | |
| $V_{GE}$ | Gate-to-Emitter Voltage | ± 20 | V |
| $P_D$ @ $T_C$ = 25°C | Maximum Power Dissipation | 90 | W |
| $P_D$ @ $T_C$ = 100°C | Maximum Power Dissipation | 36 | |
| $T_J$<br>$T_{STG}$ | Operating Junction and<br>Storage Temperature Range | -55 to +150 | °C |
| | Soldering Temperature, for 10 sec. | 300 (0.063 in. (1.6mm) from case) | |

### Thermal Resistance

| | Parameter | Min. | Typ. | Max. | Units |
|---|---|---|---|---|---|
| $R_{\theta JC}$ | Junction-to-Case - IGBT | ––– | ––– | 1.4 | °C/W |
| $R_{\theta JC}$ | Junction-to-Case - Diode | ––– | ––– | 4.4 | |
| $R_{\theta CS}$ | Case-to-Sink, flat, greased surface | ––– | 0.50 | ––– | |
| $R_{\theta JA}$ | Junction-to-Ambient, typical socket mount① | ––– | ––– | 62 | |
| $R_{\theta JA}$ | Junction-to-Ambient (PCB Mount, steady state)② | ––– | ––– | 40 | |
| Wt | Weight | ––– | 1.44 | ––– | g |



sales@prom-elec.com / ООО ПРОМЭЛЕКТРОНИКА

## Electrical Characteristics @ $T_J$ = 25°C (unless otherwise specified)

| | Parameter | Min. | Typ. | Max. | Units | Conditions | Ref.Fig. |
|---|---|---|---|---|---|---|---|
| $V_{(BR)CES}$ | Collector-to-Emitter Breakdown Voltage | 600 | — | — | V | $V_{GE}$ = 0V, $I_C$ = 500µA | |
| $\Delta V_{(BR)CES}/\Delta T_J$ | Temperature Coeff. of Breakdown Voltage | — | 0.3 | — | V/°C | $V_{GE}$ = 0V, $I_C$ = 1.0mA, (25°C-150°C) | |
| $V_{CE(on)}$ | Collector-to-Emitter Saturation Voltage | 1.5 | 1.80 | 2.20 | V | $I_C$ = 5.0A, $V_{GE}$ = 15V | 5, 6,7 |
| | | — | 2.20 | 2.50 | | $I_C$ = 5.0A,$V_{GE}$ = 15V, $T_J$ = 150°C | 9,10,11 |
| $V_{GE(th)}$ | Gate Threshold Voltage | 3.5 | 4.5 | 5.5 | V | $V_{CE}$ = $V_{GE}$, $I_C$ = 250µA | 9,10,11 |
| $\Delta V_{GE(th)}/\Delta T_J$ | Temperature Coeff. of Threshold Voltage | — | -10 | — | mV/°C | $V_{CE}$ = $V_{GE}$, $I_C$ = 1.0mA, (25°C-150°C) | 12 |
| $g_{fe}$ | Forward Transconductance | — | 3.0 | — | S | $V_{CE}$ = 50V, $I_C$ = 5.0A, PW=80µs | |
| $I_{CES}$ | Zero Gate Voltage Collector Current | — | 1.0 | 150 | µA | $V_{GE}$ = 0V, $V_{CE}$ = 600V | |
| | | — | 200 | 500 | | $V_{GE}$ = 0V, $V_{CE}$ = 600V, $T_J$ = 150°C | |
| $V_{FM}$ | Diode Forward Voltage Drop | — | 1.25 | 1.45 | | $I_C$ = 5.0A | 8 |
| | | — | 1.20 | 1.40 | V | $I_C$ = 5.0A $T_J$ = 150°C | |
| $I_{GES}$ | Gate-to-Emitter Leakage Current | — | — | ±100 | nA | $V_{GE}$ = ±20V | |

## Switching Characteristics @ $T_J$ = 25°C (unless otherwise specified)

| | Parameter | Min. | Typ. | Max. | Units | Conditions | Ref.Fig. |
|---|---|---|---|---|---|---|---|
| Qg | Total Gate Charge (turn-on) | — | 18.2 | — | | $I_C$ = 5.0A | |
| Qge | Gate - Emitter Charge (turn-on) | — | 1.9 | — | nC | $V_{CC}$ = 400V | CT1 |
| Qgc | Gate - Collector Charge (turn-on) | — | 9.2 | — | | $V_{GE}$ = 15V | |
| $E_{on}$ | Turn-On Switching Loss | — | 110 | 210 | µJ | $I_C$ = 5.0A, $V_{CC}$ = 400V | CT4 |
| $E_{off}$ | Turn-Off Switching Loss | — | 135 | 245 | | $V_{GE}$ = 15V,$R_G$ = 100Ω, L =1.4mH | |
| $E_{tot}$ | Total Switching Loss | — | 245 | 455 | | Ls = 150nH $T_J$ = 25°C ③ | |
| $t_{d(on)}$ | Turn-On Delay Time | — | 25 | 34 | | $I_C$ = 5.0A, $V_{CC}$ = 400V | CT4 |
| $t_r$ | Rise Time | — | 17 | 26 | | $V_{GE}$ = 15V, $R_G$ = 100Ω L =1.4mH | |
| $t_{d(off)}$ | Turn-Off Delay Time | — | 215 | 230 | ns | Ls = 150nH, $T_J$ = 25°C | |
| $t_f$ | Fall Time | — | 13.2 | 22 | | | |
| $E_{on}$ | Turn-On Switching Loss | — | 150 | 260 | | $I_C$ = 5.0A, $V_{CC}$ = 400V | CT4 |
| $E_{off}$ | Turn-Off Switching Loss | — | 190 | 300 | µJ | $V_{GE}$ = 15V,$R_G$ = 100Ω, L =1.4mH | 13,15 |
| $E_{tot}$ | Total Switching Loss | — | 340 | 560 | | Ls = 150nH $T_J$ = 150°C ③ | WF1WF2 |
| $t_{d(on)}$ | Turn-On Delay Time | — | 28 | 37 | | $I_C$ = 5.0A, $V_{CC}$ = 400V | 14, 16 |
| $t_r$ | Rise Time | — | 17 | 26 | | $V_{GE}$ = 15V, $R_G$ = 100Ω L =1.4mH | CT4 |
| $t_{d(off)}$ | Turn-Off Delay Time | — | 240 | 255 | ns | Ls = 150nH, $T_J$ = 150°C | WF1 |
| $t_f$ | Fall Time | — | 18 | 27 | | | WF2 |
| $C_{ies}$ | Input Capacitance | — | 290 | — | | $V_{GE}$ = 0V | |
| $C_{oes}$ | Output Capacitance | — | 34 | — | pF | $V_{CC}$ = 30V | |
| $C_{res}$ | Reverse Transfer Capacitance | — | 10 | — | | f = 1.0MHz | |
| RBSOA | Reverse Bias Safe Operting Area | FULL SQUARE | | | | $T_J$ = 150°C, $I_C$ = 26A, Vp =600V | 4 |
| | | | | | | $V_{CC}$ = 500V, $V_{GE}$ = +15V to 0V,$R_G$ = 100Ω | CT2 |
| SCSOA | Short Circuit Safe Operting Area | 10 | — | — | µs | $T_J$ = 150°C, Vp =600V, $R_G$ = 100Ω | CT3 |
| | | | | | | $V_{CC}$ = 360V, $V_{GE}$ = +15V to 0V | WF4 |
| Erec | Reverse Recovery energy of the diode | — | 90 | 175 | µJ | $T_J$ = 150°C | 17,18,19 |
| $t_{rr}$ | Diode Reverse Recovery time | — | 70 | 80 | ns | $V_{CC}$ = 400V, $I_F$ = 5.0A, L = 1.4mH | 20, 21 |
| $I_{rr}$ | Diode Peak Reverse Recovery Current | — | 10 | 14 | A | $V_{GE}$ = 15V,$R_G$ = 100Ω, Ls = 150nH | CT4,WF3 |

Note: ① to ④ are on page 15

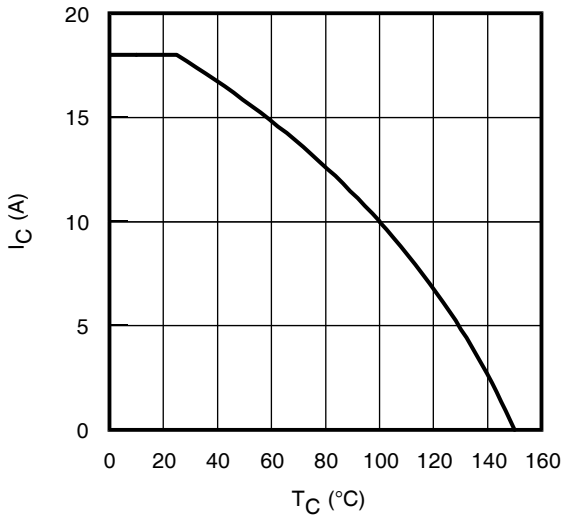


**Fig. 1** - Maximum DC Collector Current vs. Case Temperature

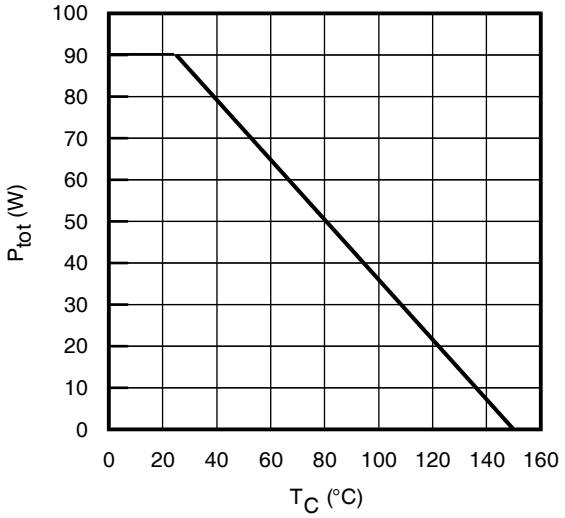


**Fig. 2** - Power Dissipation vs. Case Temperature

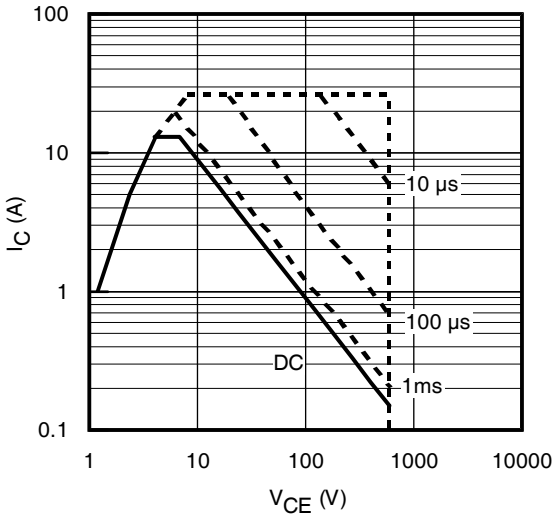


**Fig. 3** - Forward SOA
$T_C$ = 25°C; $T_J \leq$ 150°C

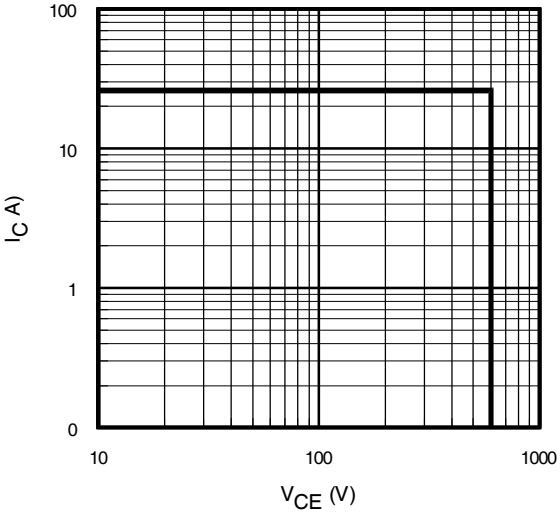


**Fig. 4** - Reverse Bias SOA
$T_J$ = 150°C; $V_{GE}$ =15V

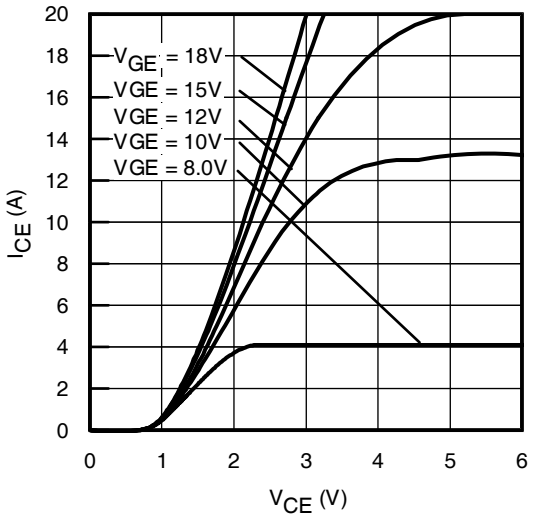


**Fig. 5** - Typ. IGBT Output Characteristics
$T_J$ = -40°C; tp = 80µs

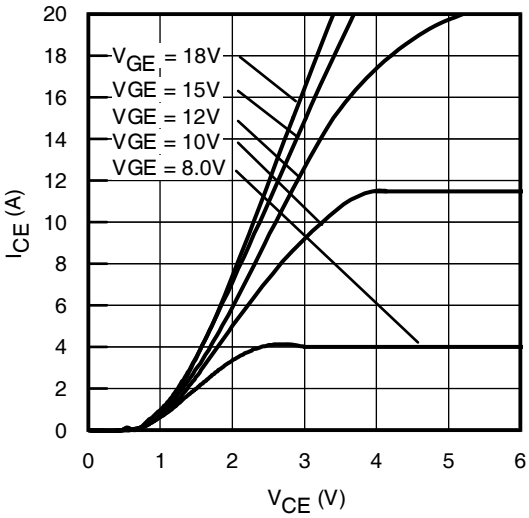


**Fig. 6** - Typ. IGBT Output Characteristics
$T_J$ = 25°C; tp = 80µs

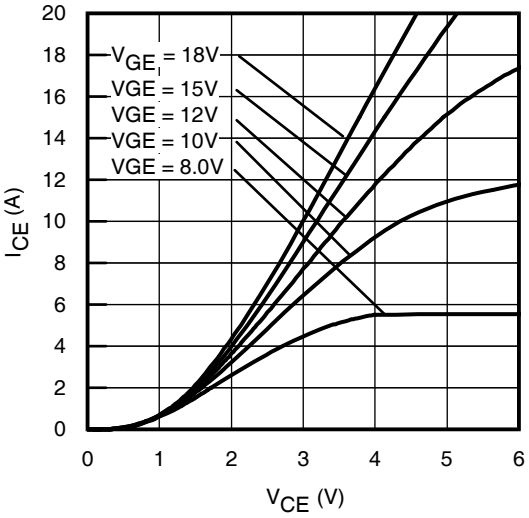


**Fig. 7** - Typ. IGBT Output Characteristics
$T_J$ = 150°C; tp = 80µs

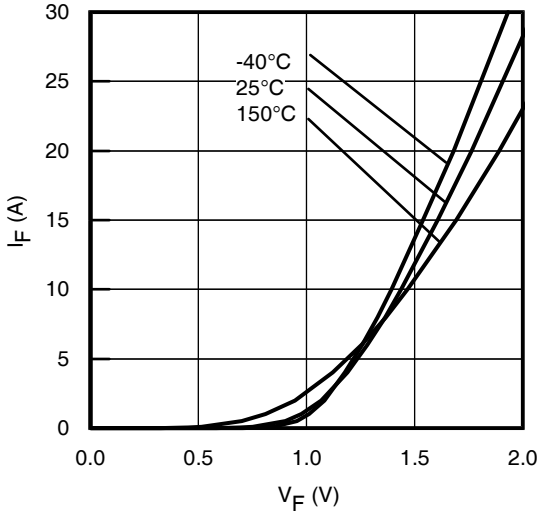


**Fig. 8** - Typ. Diode Forward Characteristics
tp = 80µs

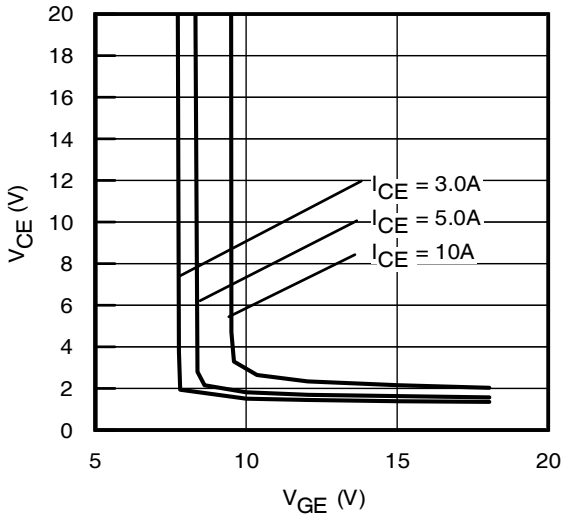


**Fig. 9** - Typical $V_{CE}$ vs. $V_{GE}$
$T_J$ = -40°C

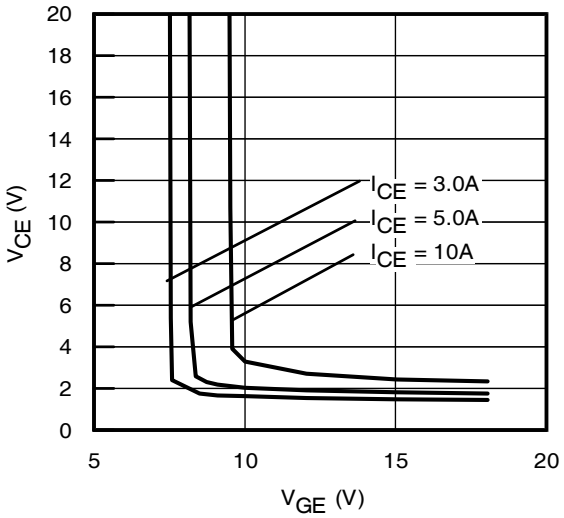


**Fig. 10** - Typical $V_{CE}$ vs. $V_{GE}$
$T_J$ = 25°C

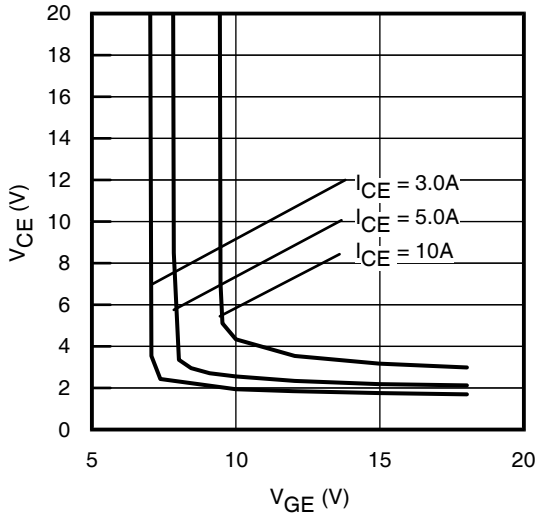


**Fig. 11** - Typical $V_{CE}$ vs. $V_{GE}$
$T_J$ = 150°C

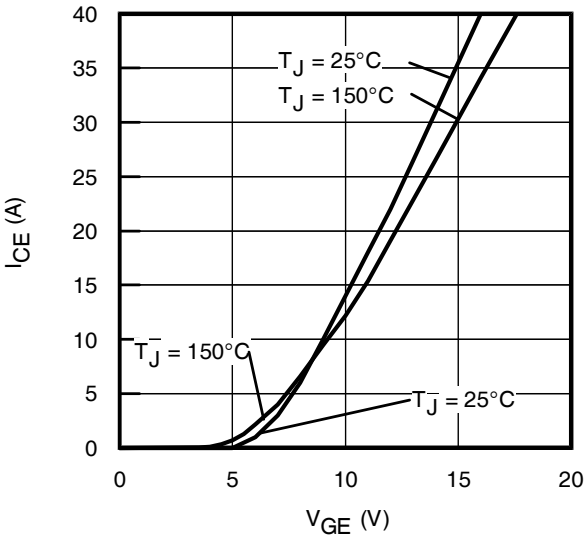


**Fig. 12** - Typ. Transfer Characteristics
$V_{CE}$ = 50V; tp = 10µs

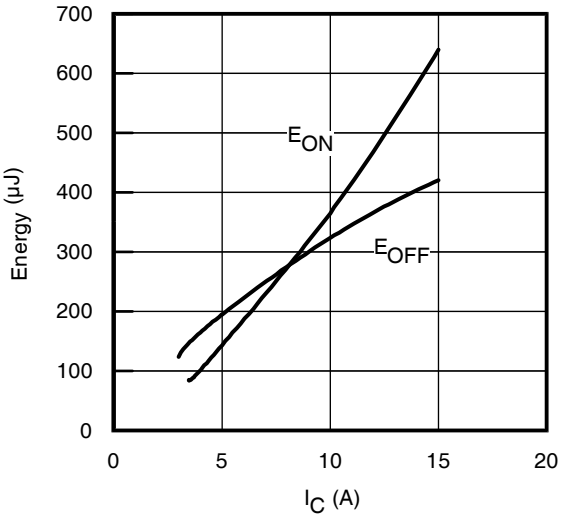


**Fig. 13** - Typ. Energy Loss vs. $I_C$
$T_J$ = 150°C; L=1.4mH; $V_{CE}$= 400V
$R_G$= 100Ω; $V_{GE}$= 15V

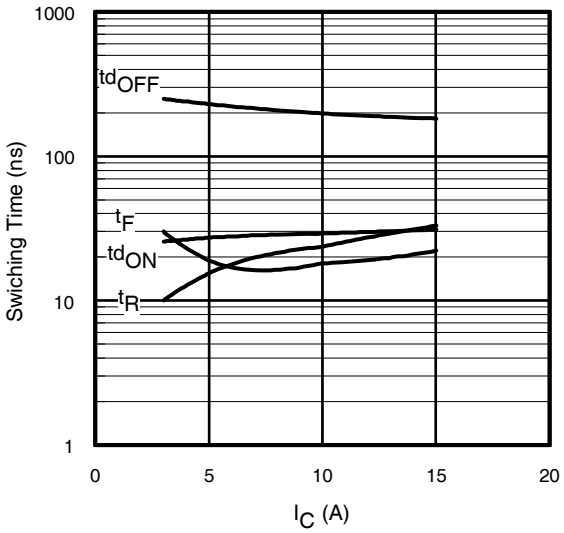


**Fig. 14** - Typ. Switching Time vs. $I_C$
$T_J$ = 150°C; L=1.4mH; $V_{CE}$= 400V
$R_G$= 100Ω; $V_{GE}$= 15V

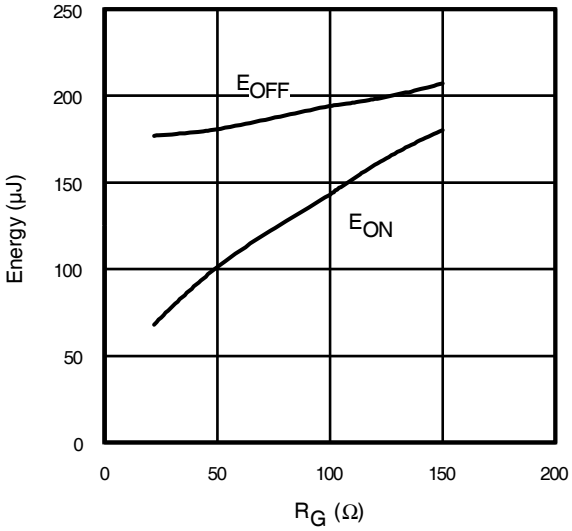


**Fig. 15** - Typ. Energy Loss vs. $R_G$
$T_J$ = 150°C; L=1.4mH; $V_{CE}$= 400V
$I_{CE}$= 5.0A; $V_{GE}$= 15V

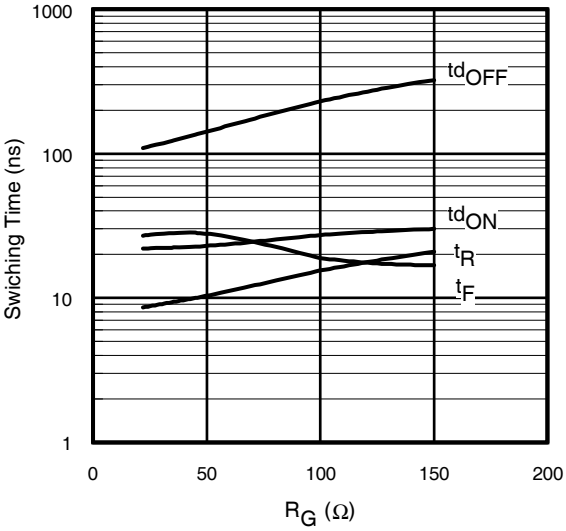


**Fig. 16** - Typ. Switching Time vs. $R_G$
$T_J$ = 150°C; L=1.4mH; $V_{CE}$= 400V
$I_{CE}$= 5.0A; $V_{GE}$= 15V

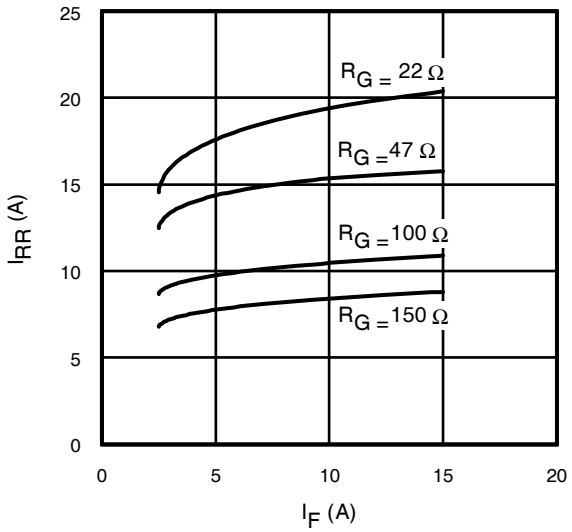


**Fig. 17** - Typical Diode $I_{RR}$ vs. $I_F$
$T_J$ = 150°C

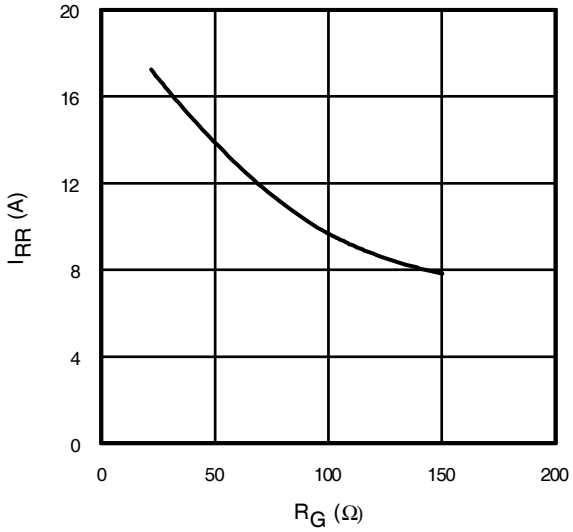


**Fig. 18** - Typical Diode $I_{RR}$ vs. $R_G$
$T_J$ = 150°C; $I_F$ = 5.0A

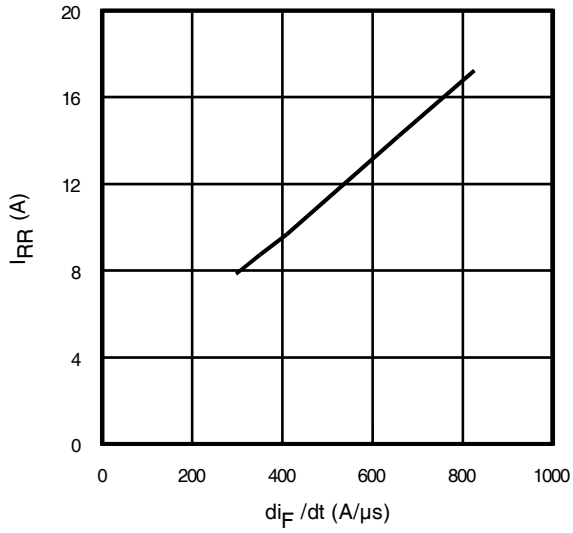


**Fig. 19**- Typical Diode $I_{RR}$ vs. $di_F$/dt
$V_{CC}$= 400V; $V_{GE}$= 15V;
$I_{CE}$= 5.0A; $T_J$ = 150°C

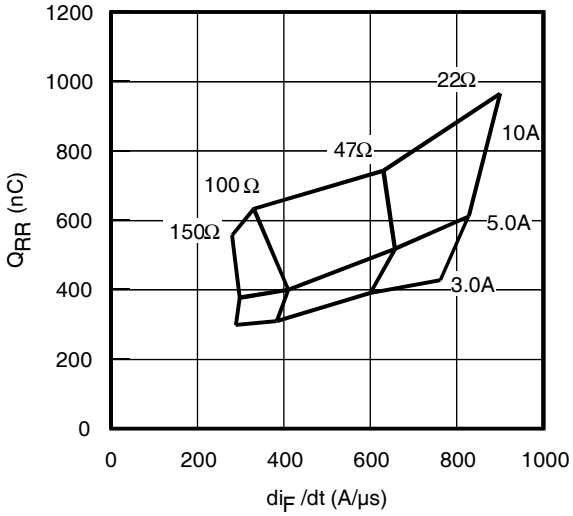


**Fig. 20** - Typical Diode $Q_{RR}$
$V_{CC}$= 400V; $V_{GE}$= 15V;$T_J$ = 150°C

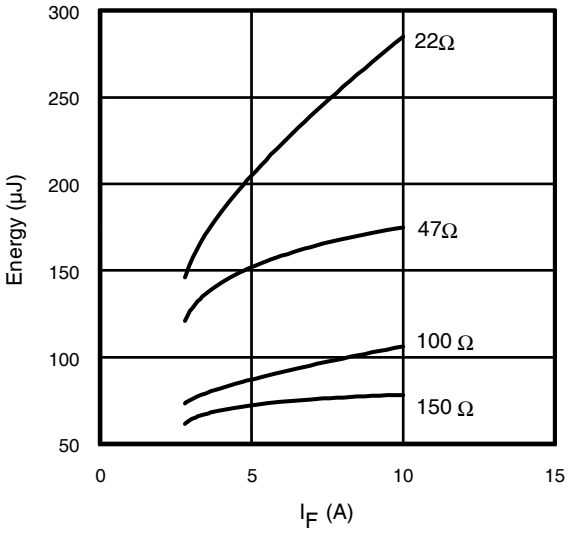


**Fig. 21** - Typical Diode $E_{RR}$ vs. $I_F$
$T_J$ = 150°C

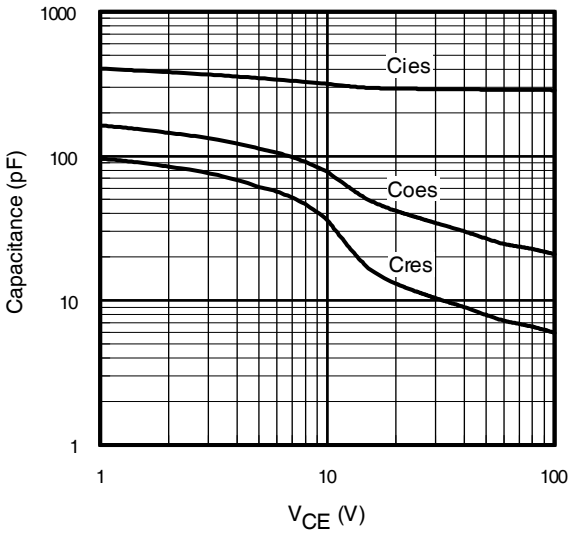


**Fig. 22**- Typ. Capacitance vs. $V_{CE}$
$V_{GE}$= 0V; f = 1MHz

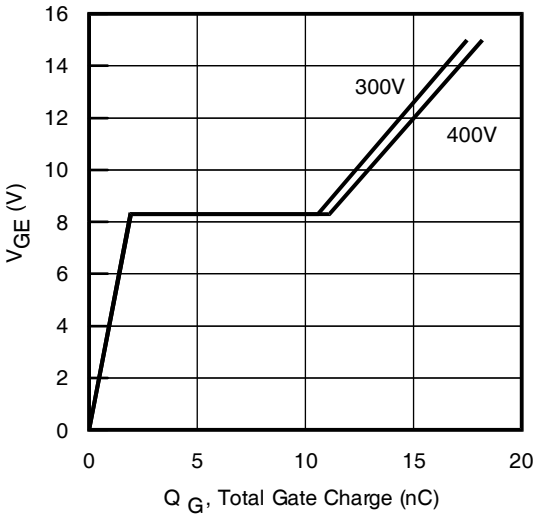


**Fig. 23** - Typical Gate Charge vs. $V_{GE}$
$I_{CE}$ = 5.0A; L = 600µH

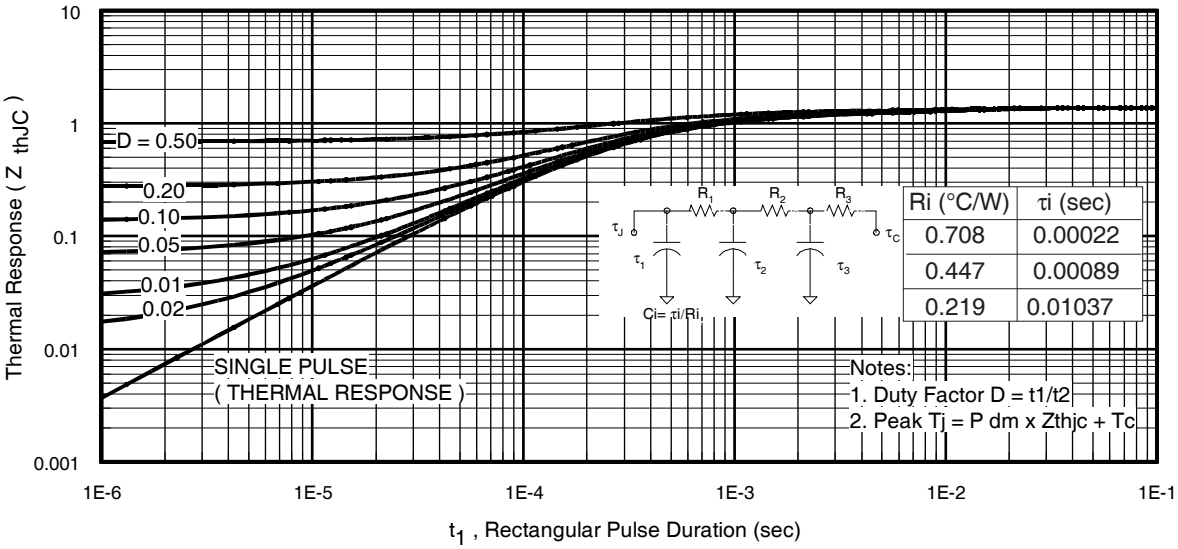


**Fig 24.** Maximum Transient Thermal Impedance, Junction-to-Case (IGBT)

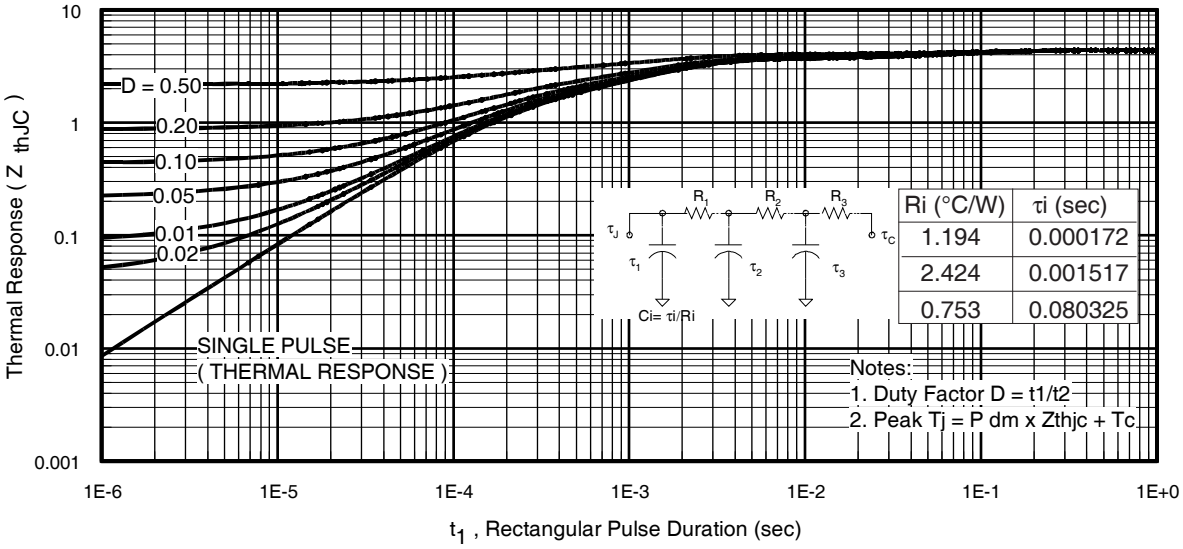


**Fig 25.** Maximum Transient Thermal Impedance, Junction-to-Case (DIODE)

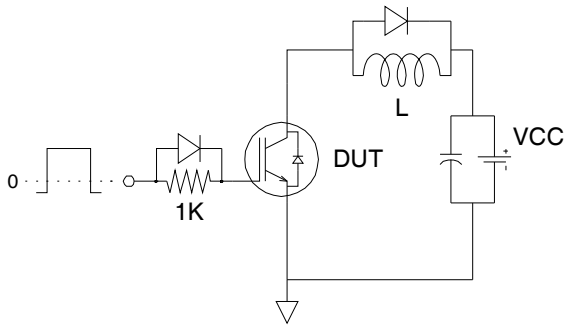


**Fig.C.T.1** - Gate Charge Circuit (turn-off)

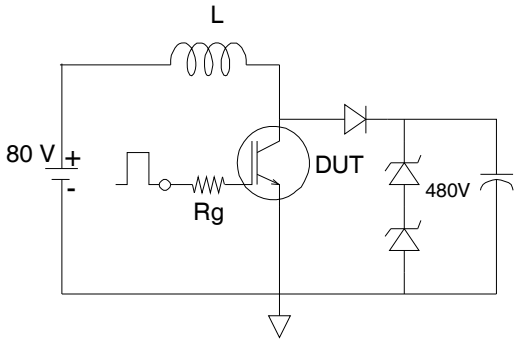


**Fig.C.T.2** - RBSOA Circuit

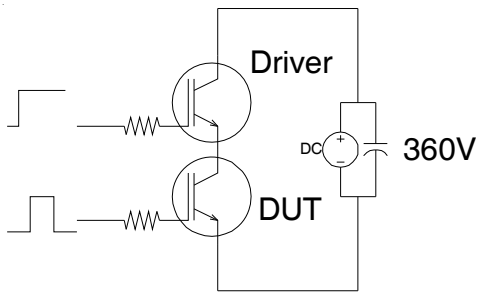


**Fig.C.T.3** - S.C.SOA Circuit

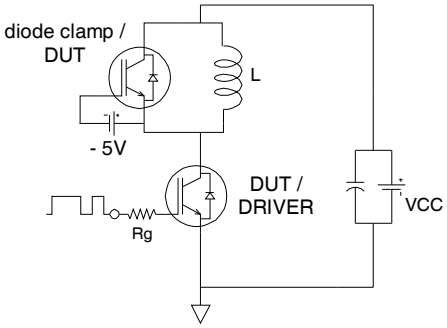


**Fig.C.T.4** - Switching Loss Circuit

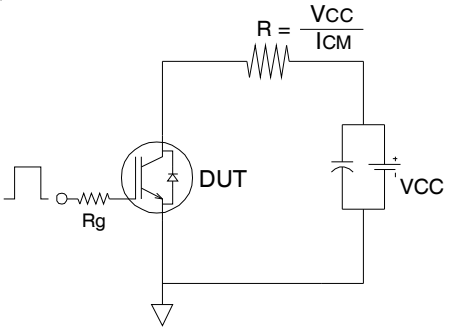


**Fig.C.T.5** - Resistive Load Circuit

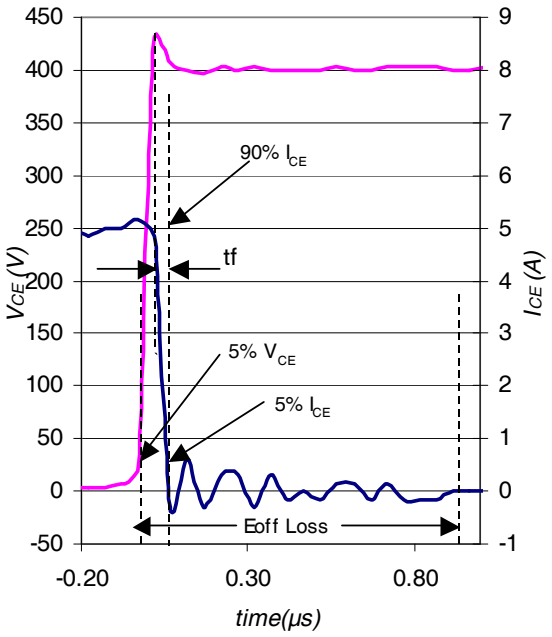


Fig. WF1- Typ. Turn-off Loss Waveform
@ $T_J$ = 150°C using Fig. CT.4

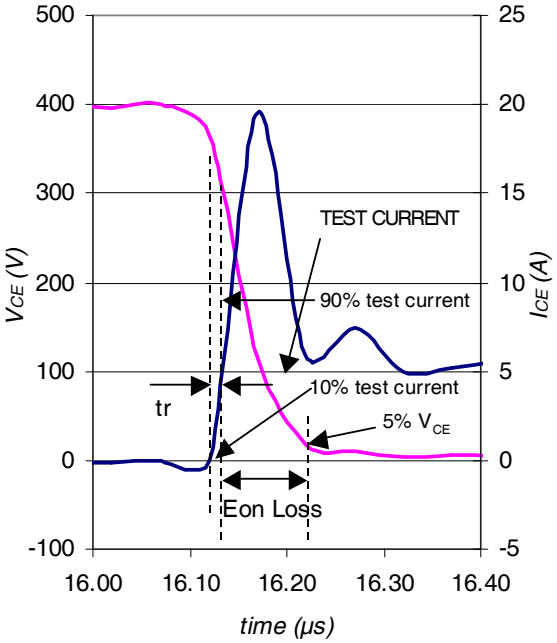


Fig. WF2- Typ. Turn-on Loss Waveform
@ $T_J$ = 150°C using Fig. CT.4

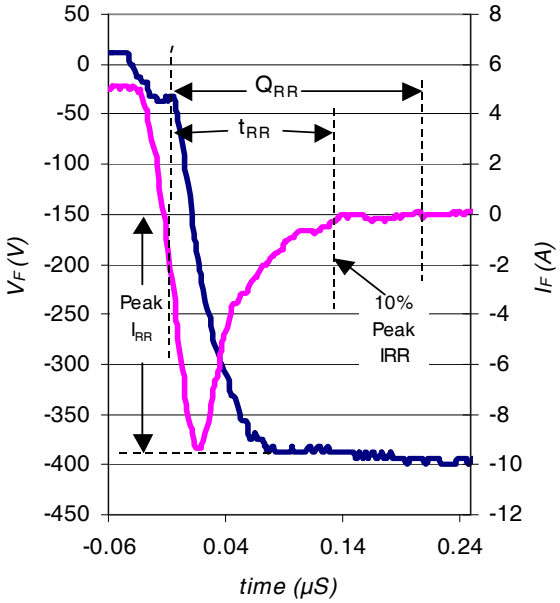


Fig. WF3- Typ. Diode Recovery Waveform
@ $T_J$ = 150°C using Fig. CT.4

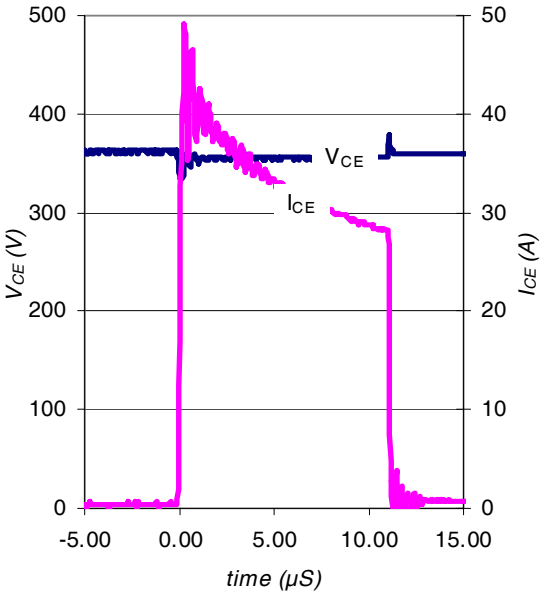


Fig. WF4- Typ. S.C Waveform
@ $T_J$ = 150°C using Fig. CT.3

## TO-220AB Package Outline

Dimensions are shown in millimeters (inches)

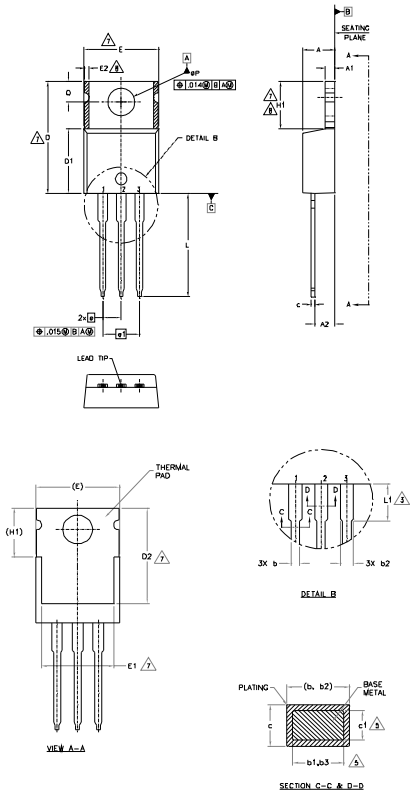


NOTES:

1.– DIMENSIONING AND TOLERANCING AS PER ASME Y14.5 M– 1994.
2.– DIMENSIONS ARE SHOWN IN INCHES [MILLIMETERS].
3.– LEAD DIMENSION AND FINISH UNCONTROLLED IN L1.
4.– DIMENSION D, D1 & E DO NOT INCLUDE MOLD FLASH. MOLD FLASH SHALL NOT EXCEED .005" (0.127) PER SIDE. THESE DIMENSIONS ARE MEASURED AT THE OUTERMOST EXTREMES OF THE PLASTIC BODY.
5.– DIMENSION b1, b3 & c1 APPLY TO BASE METAL ONLY.
6.– CONTROLLING DIMENSION : INCHES.
7.– THERMAL PAD CONTOUR OPTIONAL WITHIN DIMENSIONS E,H1,D2 & E1
8.– DIMENSION E2 X H1 DEFINE A ZONE WHERE STAMPING AND SINGULATION IRREGULARITIES ARE ALLOWED.
9.– OUTLINE CONFORMS TO JEDEC TO-220, EXCEPT A2 (max.) AND D2 (min.) WHERE DIMENSIONS ARE DERIVED FROM THE ACTUAL PACKAGE OUTLINE.

| SYMBOL | DIMENSIONS | | | | NOTES |
|---|---|---|---|---|---|
| | MILLIMETERS | | INCHES | | |
| | MIN. | MAX. | MIN. | MAX. | |
| A | 3.56 | 4.83 | .140 | .190 | |
| A1 | 0.51 | 1.40 | .020 | .055 | |
| A2 | 2.03 | 2.92 | .080 | .115 | |
| b | 0.38 | 1.01 | .015 | .040 | |
| b1 | 0.38 | 0.97 | .015 | .038 | 5 |
| b2 | 1.14 | 1.78 | .045 | .070 | |
| b3 | 1.14 | 1.73 | .045 | .068 | 5 |
| c | 0.36 | 0.61 | .014 | .024 | |
| c1 | 0.36 | 0.56 | .014 | .022 | 5 |
| D | 14.22 | 16.51 | .560 | .650 | 4 |
| D1 | 8.38 | 9.02 | .330 | .355 | |
| D2 | 11.68 | 12.88 | .460 | .507 | 7 |
| E | 9.65 | 10.67 | .380 | .420 | 4,7 |
| E1 | 6.86 | 8.89 | .270 | .350 | 7 |
| E2 | – | 0.76 | – | .030 | 8 |
| e | 2.54 BSC | | .100 BSC | | |
| e1 | 5.08 BSC | | .200 BSC | | |
| H1 | 5.84 | 6.86 | .230 | .270 | 7,8 |
| L | 12.70 | 14.73 | .500 | .580 | |
| L1 | 3.56 | 4.06 | .140 | .160 | 3 |
| øP | 3.54 | 4.08 | .139 | .161 | |
| Q | 2.54 | 3.42 | .100 | .135 | |

LEAD ASSIGNMENTS

HEXFET
1.– GATE
2.– DRAIN
3.– SOURCE

IGBTs, CoPACK
1.– GATE
2.– COLLECTOR
3.– EMITTER

DIODES
1.– ANODE
2.– CATHODE
3.– ANODE

## TO-220AB Part Marking Information

EXAMPLE: THIS IS AN IRF1010
LOT CODE 1789
ASSEMBLED ON WW 19, 1997
IN THE ASSEMBLY LINE "C"

**Note:** "P" in assembly line position indicates "Lead-Free"

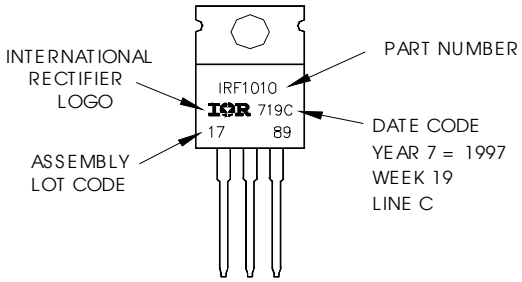


Note: For the most current drawing please refer to IR website at http://www.irf.com/package/

## D²Pak Package Outline

Dimensions are shown in millimeters (inches)

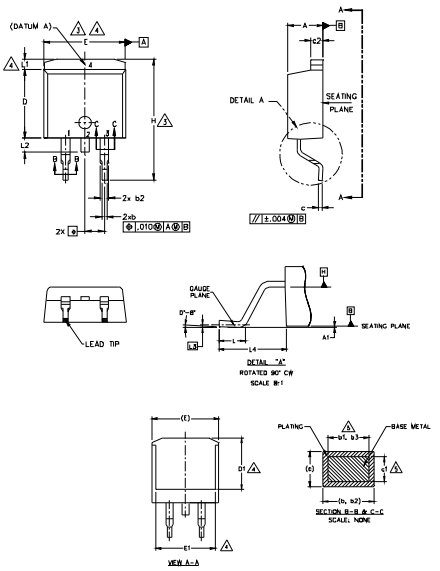


| SYMBOL | DIMENSIONS | | | | NOTES |
|---|---|---|---|---|---|
| | MILLIMETERS | | INCHES | | |
| | MIN. | MAX. | MIN. | MAX. | |
| A | 4.06 | 4.83 | .160 | .190 | |
| A1 | 0.00 | 0.254 | .000 | .010 | |
| b | 0.51 | 0.99 | .020 | .039 | |
| b1 | 0.51 | 0.89 | .020 | .035 | 5 |
| b2 | 1.14 | 1.78 | .045 | .070 | |
| b3 | 1.14 | 1.73 | .045 | .068 | 5 |
| c | 0.38 | 0.74 | .015 | .029 | |
| c1 | 0.38 | 0.58 | .015 | .023 | 5 |
| c2 | 1.14 | 1.65 | .045 | .065 | |
| D | 8.38 | 9.65 | .330 | .380 | 3 |
| D1 | 6.86 | – | .270 | | 4 |
| E | 9.65 | 10.67 | .380 | .420 | 3,4 |
| E1 | 6.22 | – | .245 | | 4 |
| e | 2.54 BSC | | .100 BSC | | |
| H | 14.61 | 15.88 | .575 | .625 | |
| L | 1.78 | 2.79 | .070 | .110 | |
| L1 | – | 1.65 | – | .066 | 4 |
| L2 | – | 1.78 | – | .070 | |
| L3 | 0.25 BSC | | .010 BSC | | |
| L4 | 4.78 | 5.28 | .188 | .208 | |

NOTES:
1. DIMENSIONING AND TOLERANCING PER ASME Y14.5M-1994
2. DIMENSIONS ARE SHOWN IN MILLIMETERS [INCHES].
3. DIMENSION D & E DO NOT INCLUDE MOLD FLASH. MOLD FLASH SHALL NOT EXCEED 0.127 [.005"] PER SIDE. THESE DIMENSIONS ARE MEASURED AT THE OUTMOST EXTREMES OF THE PLASTIC BODY AT DATUM H.
4. THERMAL PAD CONTOUR OPTIONAL WITHIN DIMENSION E, L1, D1 & E1.
5. DIMENSION b1 AND c1 APPLY TO BASE METAL ONLY.
6. DATUM A & B TO BE DETERMINED AT DATUM PLANE H.
7. CONTROLLING DIMENSION: INCH.
8. OUTLINE CONFORMS TO JEDEC OUTLINE TO-263AB.

LEAD ASSIGNMENTS

DIODES
1.- ANODE (TWO DIE) / OPEN (ONE DIE)
2, 4.- CATHODE
3.- ANODE

HEXFET
1.- GATE
2, 4.- DRAIN
3.- SOURCE

IGBTs, CoPACK
1.- GATE
2, 4.- COLLECTOR
3.- EMITTER

## D²Pak Part Marking Information

EXAMPLE: THIS IS AN IRF530S WITH
LOT CODE 8024
ASSEMBLED ON WW 02, 2000
IN THE ASSEMBLY LINE "L"

Note: "P" in assembly line position indicates "Lead-Free"

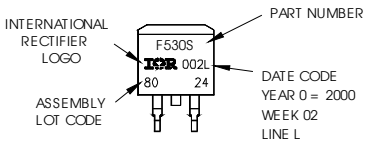


OR

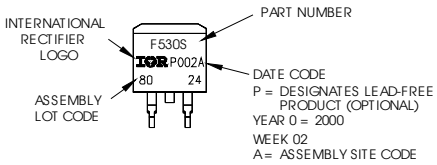


Note: For the most current drawing please refer to IR website at http://www.irf.com/package/

## TO-262 Package Outline

Dimensions are shown in millimeters (inches)

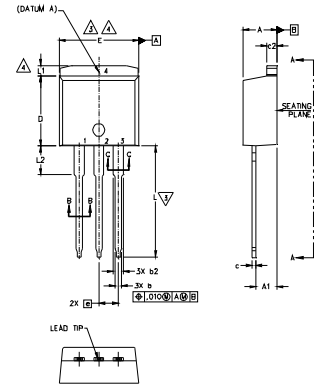


| SYMBOL | DIMENSIONS | | | | NOTES |
|---|---|---|---|---|---|
| | MILLIMETERS | | INCHES | | |
| | MIN. | MAX. | MIN. | MAX. | |
| A | 4.06 | 4.83 | .160 | .190 | |
| A1 | 2.03 | 3.02 | .080 | .119 | |
| b | 0.51 | 0.99 | .020 | .039 | |
| b1 | 0.51 | 0.89 | .020 | .035 | 5 |
| b2 | 1.14 | 1.78 | .045 | .070 | |
| b3 | 1.14 | 1.73 | .045 | .068 | 5 |
| c | 0.38 | 0.74 | .015 | .029 | |
| c1 | 0.38 | 0.58 | .015 | .023 | 5 |
| c2 | 1.14 | 1.65 | .045 | .065 | |
| D | 8.38 | 9.65 | .330 | .380 | 3 |
| D1 | 6.86 | – | .270 | – | 4 |
| E | 9.65 | 10.67 | .380 | .420 | 3,4 |
| E1 | 6.22 | – | .245 | | 4 |
| e | 2.54 BSC | | .100 BSC | | |
| L | 13.46 | 14.10 | .530 | .555 | |
| L1 | – | 1.65 | – | .065 | 4 |
| L2 | 3.56 | 3.71 | .140 | .146 | |

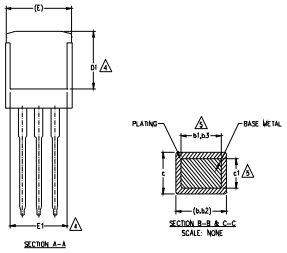


NOTES:

1. DIMENSIONING AND TOLERANCING PER ASME Y14.5M-1994
2. DIMENSIONS ARE SHOWN IN MILLIMETERS [INCHES].
3. DIMENSION D & E DO NOT INCLUDE MOLD FLASH. MOLD FLASH SHALL NOT EXCEED 0.127 [.005"] PER SIDE. THESE DIMENSIONS ARE MEASURED AT THE OUTMOST EXTREMES OF THE PLASTIC BODY.
4. THERMAL PAD CONTOUR OPTIONAL WITHIN DIMENSION E, L1, D1 & E1.
5. DIMENSION b1 AND c1 APPLY TO BASE METAL ONLY.
6. CONTROLLING DIMENSION: INCH.
7.- OUTLINE CONFORM TO JEDEC TO-262 EXCEPT A1(max.), b(min.) AND D1(min.) WHERE DIMENSIONS DERIVED THE ACTUAL PACKAGE OUTLINE.

LEAD ASSIGNMENTS

IGBTs, CoPACK

1.- GATE
2.- COLLECTOR
3.- EMITTER
4.- COLLECTOR

HEXFET

1.- GATE
2.- DRAIN
3.- SOURCE
4.- DRAIN

DIODES

1.- ANODE (TWO DIE) / OPEN (ONE DIE)
2, 4.- CATHODE
3.- ANODE

## TO-262 Part Marking Information

EXAMPLE: THIS IS AN IRL3103L
LOT CODE 1789
ASSEMBLED ON WW 19, 1997
IN THE ASSEMBLY LINE "C"

Note: "P" in assembly line position indicates "Lead-Free"

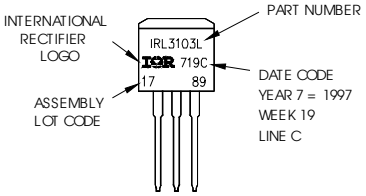


OR

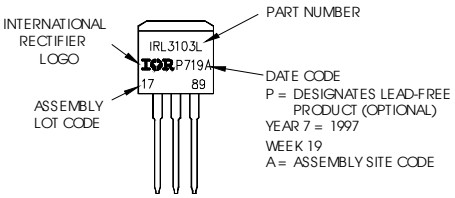


Note: For the most current drawing please refer to IR website at http://www.irf.com/package/

# D²Pak Tape & Reel Information

Dimensions are shown in millimeters (inches)

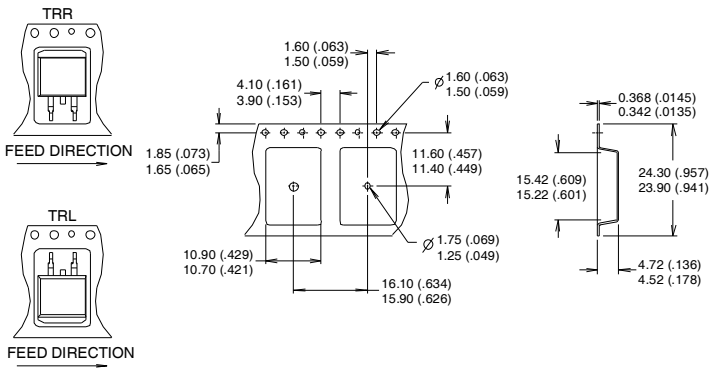


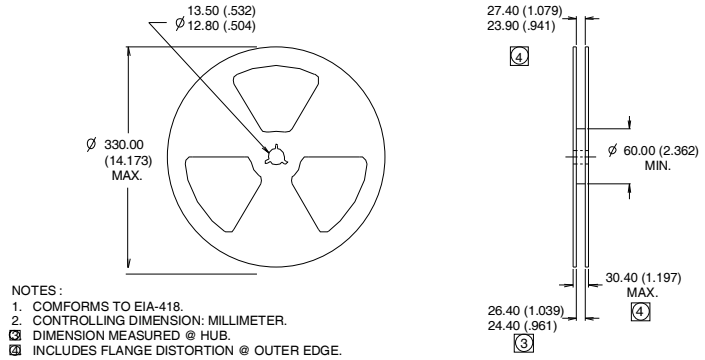


Notes:

① This is only applied to TO-220AB package

② This is applied to D²Pak, when mounted on 1" square PCB ( FR-4 or G-10 Material ).
For recommended footprint and soldering techniques refer to application note #AN-994.

③ Energy losses include "tail" and diode reverse recovery.

④ $V_{CC}$ = 80% ($V_{CES}$), $V_{GE}$ = 20V, L = 100 µH, $R_G$ = 100Ω.

Data and specifications subject to change without notice.
This product has been designed and qualified for Industrial market.
Qualification Standards can be found on IR's Web site.

International
IOR Rectifier

**IR WORLD HEADQUARTERS:** 101N. Sepulveda, El Segundo, California 90245, USA Tel: (310) 252-7105
TAC Fax: (310) 252-7903
Visit us at www.irf.com for sales contact information. 01/2013