# CLW-2424-W2E-ER series

*24V / 1A Wall mounted type AC/DC adaptor*

**Features:**

- *Universal AC input / Full range*
- *ErP step II / CEC level VI compliance*
- *No load power consumption P < 0.075W*
- *Protections: Overload / Short circuit / Over Voltage*

CONSTANT VOLTAGE

## ELECTRICAL SPECIFICATION

| MODEL | CLW-2424-W2E-ER |
|---|---|
| **OUTPUT** | |
| *Rated Voltage* | 24V |
| *Rated Current* | 1A |
| *Current Range* | 0 ÷ 1A |
| *Rated Power* | 24W |
| *Line Regulation* | ± 1% |
| *Load Regulation* | ± 5% |
| *Tolerance [3]* | ± 8% |
| *Ripple & Noise (max.) [2]* | $200mV_{P-P}$ |
| *Setup, Rise Time [4]* | 5000ms, 30ms / 230VAC at full load |
| *Hold up Time (typ.)* | 4ms / 230VAC at full load |
| **INPUT** | |
| *Voltage Range* | 90 ÷ 264VAC |
| *Frequency Range* | 47 ÷ 63Hz |
| *Efiiciency (typ.)* | 86.81% |
| *AC Current (typ.)* | 0.8A / 115VAC, 0.4A / 230VAC |
| *No load Power Consumption (max.)* | 0.075W |
| **PROTECTIONS** | |
| *Overload* | Range: 105-200% |
| | Auto-recovery. |
| *Short Circuit* | Type: hiccup mode, auto-recovery. |
| *Over Voltage* | Type: auto-recovery. |

# CLW-2424-W2E-ER series

*24V / 1A Wall mounted type AC/DC adaptor*

## WORKING ENVIRONMENT

| | |
|---|---|
| ***Working Temperature*** | 0°C ÷ 40°C |
| ***Working Humidity*** | 10 ÷ 90% RH non-condensing |
| ***Storage Temperature and Humidity*** | -20°C ÷ 85°C, 5 ÷ 90% RH non-condensing |

## SAFETY and EMC REGULATIONS

| | |
|---|---|
| ***Safety Standards*** | Compliance to EN 62368 |
| ***Withstand Voltage*** | IN/OUT: 3.6kVAC |
| ***Isolation Resistance*** | IN/OUT: 50MΩ/500VDC/25°C/70% |
| ***EMC Emission*** | Compliance to EN55032 |
| ***EMC Immunity*** | Compliance to EN61000-4-2, -3, -4, -5 |
| ***Harmonic Current*** | Compliance to EN61000-3-3; EN61000-3-2 |

## OTHERS

| | | |
|---|---|---|
| ***DC wire and plug*** | Wire: 24AWG*2C, length = 1500mm | Plug: 2.1/5.5, positive inside |
| ***Dimensions*** | 82 x 32.6 x 74.1mm (L x W x H) | |
| ***Net Weight*** | 111.2g | |

*1. All parameters NOT specially mentioned are measured at 230VAC input, rated load and 25°C of ambient temperature.*
*2. Ripple & noise are measured at 20MHz of bandwidth by using a 12" twisted pair-wire terminated with a 0.1μF i 47μF parallel capacitor.*
*3. Tolerance includes set up tolerance, line regulation and load regulation.*
*4. Setup and rise time is measured from 0 to 90% rated output voltage.*
*5.Power supply is considered as component not indented to apply by end-user. Power supply meets safety and EMC standards however the final equipment with power supply must be re-quality to comply with EMC Directives.*

## MECHANICAL SPECIFICATION

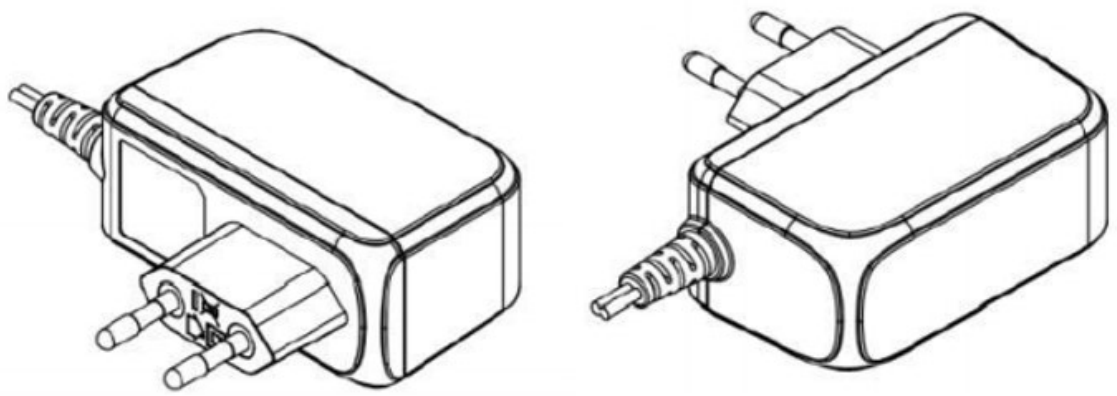

# CLW-2424-W2E-ER series

*24V / 1A Wall mounted type AC/DC adaptor*

## MECHANICAL SPECIFICATION

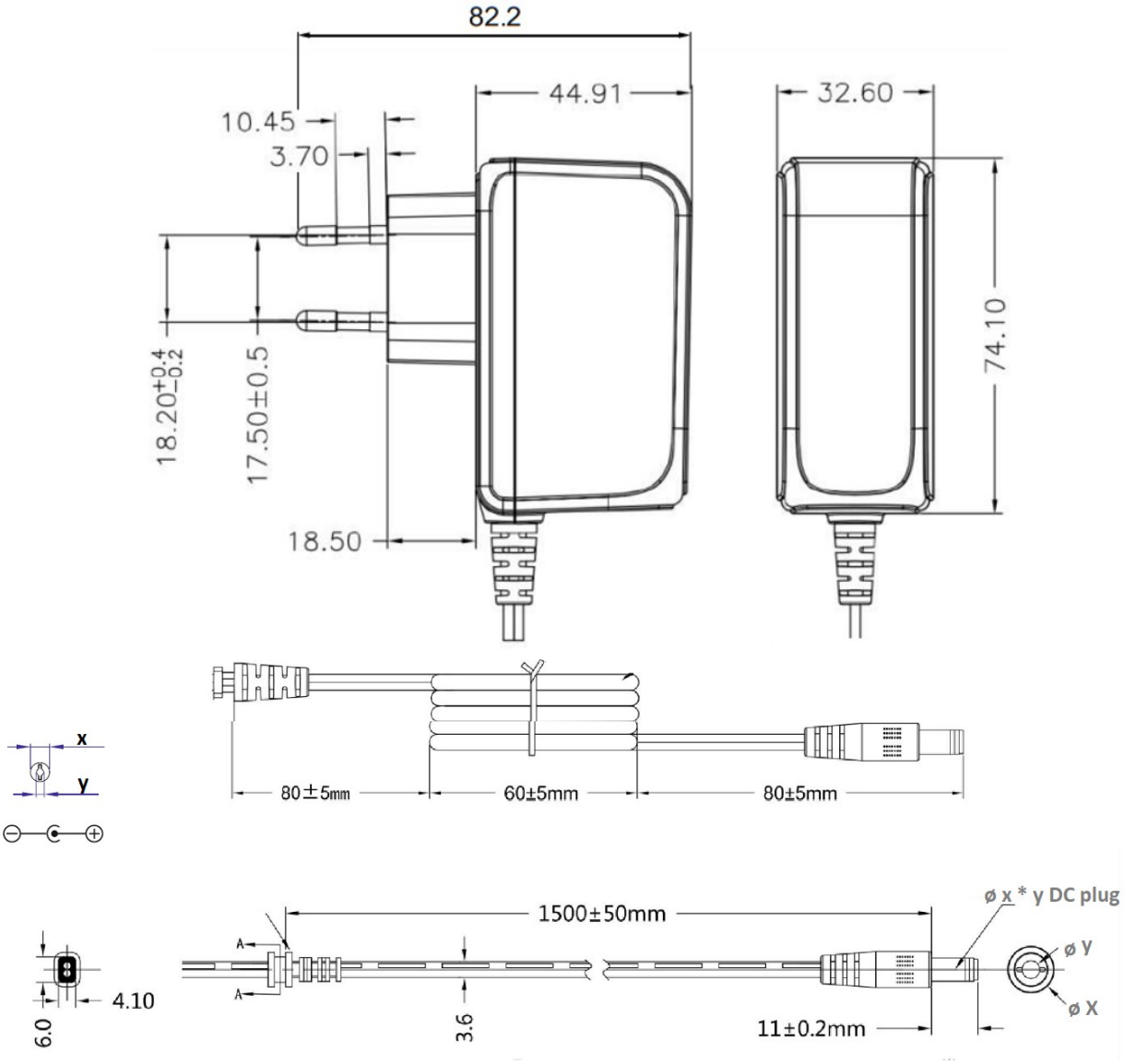


| *MODEL | DC PLUG | X [mm} | Y [mm] | Polarity |
|---|---|---|---|---|
| **CLW-2424-W2E-ER** | **5.5x2.1mm** | **5.5** | **2.1** | **center positive** |
| CLW-2424-W2E-ER25 | 5.5x2.5mm | 5.5 | 2.5 | center positive |
| CLW-2424-W2E-ER13 | 3.5x1.3mm | 3.5 | 1.3 | center positive |
| CLW-2424-W2E-ER40 | 4.0x1.7mm | 4.0 | 1.7 | center positive |
| CLW-2424-W2E-ER48 | 4.8x1.7mm | 4.8 | 1.7 | center positive |
| CLW-2424-W2E-ER-CN | 5.5x2.1mm | 5.5 | 2.1 | center negative |
| CLW-2424-W2E-ER25-CN | 5.5x2.5mm | 5.5 | 2.5 | center negative |
| CLW-2424-W2E-ER13-CN | 3.5x1.3mm | 3.5 | 1.3 | center negative |
| CLW-2424-W2E-ER40-CN | 4.0x1.7mm | 4.0 | 1.7 | center negative |
| CLW-2424-W2E-ER48-CN | 4.8x1.7mm | 4.8 | 1.7 | center negative |