Si823x Data Sheet

0.5 and 4.0 Amp ISOdrivers (2.5 and 5 kV_{RMS})

The Si823x isolated driver family combines two independent, isolated drivers into a single package. The Si8230/1/3/4 are high-side/low-side drivers, while the Si8232/5/7/8 are dual drivers. Versions with peak output currents of 0.5 A (Si8230/1/2/7) and 4.0 A (Si8233/4/5/8) are available. All drivers operate with a maximum supply voltage of 24 V.

The Si823x drivers utilize Silicon Labs' proprietary silicon isolation technology, which provides up to 5 kV_{RMS} withstand voltage per UL1577 and fast 45 ns propagation times. Driver outputs can be grounded to the same or separate grounds or connected to a positive or negative voltage. The TTL level compatible inputs with >400 mV hysteresis are available in individual control input (Si8230/2/3/5/7/8) or PWM input (Si8231/4) configurations. High integration, low propagation delay, small installed size, flexibility, and cost-effectiveness make the Si823x family ideal for a wide range of isolated MOSFET/IGBT gate drive applications.

Automotive Grade is available for certain part numbers. These products are built using automotive-specific flows at all steps in the manufacturing process to ensure the robustness and low defectivity required for automotive applications.

Industrial Applications

- Power delivery systems
- Motor control systems
- Isolated dc-dc power supplies
- Lighting control systems
- Plasma displays
- Solar and industrial inverters

Safety Regulatory Approvals

- UL 1577 recognized
  - Up to 5000 V_{RMS} for 1 minute
- CSA component notice 5A approval
  - IEC 60950-1, 62368-1, 60601-1 (reinforced insulation)
- VDE certification conformity
  - VDE 0884-10
  - EN60950-1 (reinforced insulation)
- CQC certification approval
  - GB4943.1

Automotive Applications

- On-board chargers
- Battery management systems
- Charging stations
- Traction inverters
- Hybrid Electric Vehicles
- Battery Electric Vehicles

KEY FEATURES

- Two completely isolated drivers in one package
  - Up to 5 kV_{RMS} input-to-output isolation
  - Up to 1500 V_{DC} peak driver-to-driver differential voltage
- HS/LS and dual driver versions
- Up to 8 MHz switching frequency
- 0.5 A peak output (Si8230/1/2/7)
- 4.0 A peak output (Si8233/4/5/8)
- High electromagnetic immunity
- RoHS-compliant packages:
  - SOIC-14/16 wide body
  - SOIC-16 narrow body
  - LGA-14
  - QFN-14 (pin to pin compatible with LGA-14 packages)
- AEC-Q100 qualification
- Automotive-grade OPNs available
  - AIAG compliant PPAP documentation support
  - IMDS and CAMDS listing support

sales@prom-elec.com / ООО ПРОМЭЛЕКТРОНИКА

1. Ordering Guide

Table 1.1. Si823x Ordering Guide [1, 2, 3]

Ordering Part Number (OPN)	Inputs	Configuration	Peak Current	UVLO Voltage	Isolation Rating	Temp Range	Package Type	Legacy Ordering Part Number (OPN) 2.5 kV Only
Wide Body (WB) Package Options								
Si8230BB-D-IS	VIA, VIB	High Side/ Low Side	0.5 A	8 V	2.5 kVrms	–40 to +125 °C	SOIC-16 Wide Body	Si8230-A-IS
Si8231BB-D-IS	PWM	High Side/ Low Side						Si8231-A-IS
Si8232BB-D-IS	VIA,VIB	Dual Driver						Si8232-A-IS
Si8234CB-D-IS	PWM	High Side/ Low Side	4.0 A	10 V				N/A
Si8233BB-D-IS	VIA,VIB	High Side/ Low Side		8 V				Si8233-B-IS
Si8234BB-D-IS	PWM	High Side/ Low Side						Si8234-B-IS
Si8235BB-D-IS	VIA,VIB	Dual Driver						Si8235-B-IS
Si8230AB-D-IS	VIA, VIB	High Side/ Low Side	0.5 A	5 V	2.5 kVrms	–40 to +125 °C	SOIC-16 Wide Body	N/A
Si8231AB-D-IS	PWM							N/A
Si8232AB-D-IS	VIA,VIB	Dual Driver						N/A
Si8233AB-D-IS	VIA,VIB	High Side/ Low Side	4.0 A	5 V				N/A
Si8234AB-D-IS	PWM							N/A
Si8235AB-D-IS	VIA,VIB	Dual Driver						N/A
Narrow Body (NB) Package Options								
Si8230BB-D-IS1	VIA,VIB	High Side/ Low Side	0.5 A	8 V	2.5 kVrms	–40 to +125 °C	SOIC-16 Narrow Body	N/A
Si8231BB-D-IS1	PWM	High Side/ Low Side						
Si8232BB-D-IS1	VIA,VIB	Dual Driver						
Si8233BB-D-IS1	VIA,VIB	High Side/ Low Side	4.0 A	8 V				
Si8234BB-D-IS1	PWM	High Side/ Low Side						
Si8235BB-D-IS1	VIA,VIB	Dual Driver						
Si8235BA-D-IS1	VIA,VIB	Dual Driver			1.0 kVrms			

Ordering Part Number (OPN)	Inputs	Configuration	Peak Current	UVLO Voltage	Isolation Rating	Temp Range	Package Type	Legacy Ordering Part Number (OPN) 2.5 kV Only
Si8230AB-D-IS1	VIA,VIB	High Side/ Low Side	0.5 A	5 V	2.5 kVrms	–40 to +125 °C	SOIC-16 Narrow Body	N/A
Si8231AB-D-IS1	PWM							N/A
Si8232AB-D-IS1	VIA,VIB	Dual Driver						N/A
Si8233AB-D-IS1	VIA,VIB	High Side/ Low Side	4.0 A	5 V				N/A
Si8234AB-D-IS1	PWM							N/A
Si8235AB-D-IS1	VIA,VIB	Dual Driver						N/A
LGA Package Options								
Si8233CB-D-IM	VIA,VIB	High Side/ Low Side	4.0 A	10 V	2.5 kVrms	–40 to +125 °C	LGA-14 5x5 mm	N/A
Si8233BB-D-IM				8 V				Si8233-B-IM
Si8233AB-D-IM				5 V				N/A
Si8234BB-D-IM	PWM			8 V				Si8234-B-IM
Si8234AB-D-IM				5 V				N/A
Si8235BB-D-IM	VIA,VIB	Dual Driver		8 V				Si8235-B-IM
Si8235AB-D-IM				5 V				N/A
QFN Package Options								
SI8233AB-D-IM1	VIA,VIB	High Side/ Low Side	4.0 A	5 V	2.5 kVrms	–40 to +125 °C	QFN-14	N/A
SI8233BB-D-IM1				8 V				N/A
SI8234AB-D-IM1	PWM			5 V				N/A
SI8234BB-D-IM1				8 V				N/A
SI8235AB-D-IM1	VIA,VIB	Dual Driver		5 V				N/A
SI8235BB-D-IM1				8 V				N/A
5 kV Ordering Options								
Si8230BD-D-IS	VIA, VIB	High Side/ Low Side	0.5 A	8 V	5.0 kVrms	–40 to +125 °C	SOIC-16 Wide Body	N/A
Si8231BD-D-IS	PWM	High Side/ Low Side						
Si8232BD-D-IS	VIA, VIB	Dual Driver						
Si8233BD-D-IS	VIA, VIB	High Side/ Low Side	4.0 A					
Si8234BD-D-IS	PWM	High Side/ Low Side						
Si8235BD-D-IS	VIA, VIB	Dual Driver						

Ordering Part Number (OPN)	Inputs	Configuration	Peak Current	UVLO Voltage	Isolation Rating	Temp Range	Package Type	Legacy Ordering Part Number (OPN) 2.5 kV Only
Si8230AD-D-IS	VIA, VIB	High Side/ Low Side	0.5 A	5 V	5.0 kVrms	–40 to +125 °C	SOIC-16 Wide Body	N/A
Si8231AD-D-IS	PWM							N/A
Si8232AD-D-IS	VIA, VIB	Dual Driver						N/A
Si8233AD-D-IS	VIA, VIB	High Side/ Low Side	4.0 A	5 V				N/A
Si8234AD-D-IS	PWM							N/A
Si8235AD-D-IS	VIA, VIB	Dual Driver						N/A
SI8230AD-D-IS3	VIA, VIB	High Side/ Low Side	0.5 A				SOIC-14 Wide Body with increased creepage	N/A
SI8230BD-D-IS3	VIA, VIB			8 V				N/A
SI8233AD-D-IS3	VIA, VIB		4.0 A	5 V				N/A
SI8233BD-D-IS3	VIA, VIB			8 V				N/A
SI8235AD-D-IS3	VIA, VIB	Dual Driver		5 V				N/A
SI8235BD-D-IS3	VIA, VIB			8 V				N/A
3 V VDDI Ordering Options								
Si8237AB-D-IS1	VIA, VIB	Dual Driver	0.5 A	5 V	2.5 kVrms	–40 to +125 °C	SOIC-16 Narrow Body	N/A
Si8237BB-D-IS1	VIA, VIB	Dual Driver		8 V				
Si8238AB-D-IS1	VIA, VIB	Dual Driver	4.0 A	5 V				
Si8238BB-D-IS1	VIA, VIB	Dual Driver		8 V				
Si8237AD-D-IS	VIA, VIB	Dual Driver	0.5 A	5 V	5.0 kVrms		SOIC-16 Wide Body	
Si8237BD-D-IS	VIA, VIB	Dual Driver		8 V				
Si8238AD-D-IS	VIA, VIB	Dual Driver	4.0 A	5 V				
Si8238BD-D-IS	VIA, VIB	Dual Driver		8 V				
SI8238AD-D-IS3	VIA, VIB	Dual Driver		5 V			SOIC-14 Wide Body with increased creepage	
SI8238BD-D-IS3	VIA, VIB	Dual Driver		8 V				

1. All packages are RoHS-compliant with peak reflow temperatures of 260 °C according to the JEDEC industry standard classifications and peak solder temperatures.
2. “Si” and “SI” are used interchangeably.
3. An "R" at the end of the part number denotes tape and reel packaging option.

Automotive Grade OPNs

Automotive-grade devices are built using automotive-specific flows at all steps in the manufacturing process to ensure robustness and low defectivity. These devices are supported with AIAG-compliant Production Part Approval Process (PPAP) documentation, and feature International Material Data System (IMDS) and China Automotive Material Data System (CAMDS) listing. Qualifications are compliant with AEC-Q100, and a zero-defect methodology is maintained throughout definition, design, evaluation, qualification, and mass production steps.

Table 1.2. Ordering Guide for Automotive Grade OPNs[1, 2, 4, 5]

Ordering Part Number (OPN)	Inputs	Configuration	Peak Current	UVLO Voltage	Isolation Rating	Temp Range	Package Type
Wide Body (WB) Package Options							
Si8233BB-AS	VIA, VIB	High Side/Low Side	4.0 A	8 V	2.5 kVrms	–40 to +125 °C	SOIC-16 Wide Body
Narrow Body (NB) Package Options							
Si8230BB-AS1	VIA, VIB	High Side/Low Side	0.5 A	8 V	2.5 kVrms	–40 to +125 °C	SOIC-16 Narrow Body
Si8233BB-AS1	VIA, VIB	High Side/Low Side	4.0 A	8 V	2.5 kVrms	–40 to +125 °C	SOIC-16 Narrow Body
Si8235BB-AS1	VIA, VIB	High Side/Low Side	4.0 A	8 V	2.5 kVrms	–40 to +125 °C	SOIC-16 Narrow Body
Si8233AB-AS1	VIA, VIB	High Side/Low Side	4.0 A	5 V	2.5 kVrms	–40 to +125 °C	SOIC-16 Narrow Body
LGA Package Option							
Si8235BB-AM	VIA, VIB	Dual Driver	4.0 A	8 V	2.5 kVrms	–40 to +125 °C	LGA-14 5x5 mm
5 kV Ordering Options							
Si8233BD-AS	VIA, VIB	High Side/Low Side	4.0 A	8 V	5.0	–40 to +125 °C	SOIC-16 Wide Body
Si8235BD-AS	VIA, VIB	Dual Driver	4.0 A	8 V	5.0	–40 to +125 °C	SOIC-16 Wide Body
3 V VDDI Ordering Options							
Si8238BB-AS1	VIA, VIB	Dual Driver	4.0 A	8 V	2.5 kVrms	–40 to +125 °C	SOIC-16 Narrow Body
Si8238BD-AS	VIA, VIB	Dual Driver	4.0 A	8 V	5.0 kVrms	–40 to +125 °C	SOIC-16 Wide Body

Note:

1. All packages are RoHS-compliant with peak reflow temperatures of 260 °C according to the JEDEC industry standard classifications.
2. “Si” and “SI” are used interchangeably.
3. An "R" at the end of the part number denotes tape and reel packaging option.
4. Automotive-Grade devices (with an "–A" suffix) are identical in construction materials, topside marking, and electrical parameters to their Industrial-Grade (with a "–I" suffix) version counterparts. Automotive-Grade products are produced utilizing full automotive process flows and additional statistical process controls throughout the manufacturing flow. The Automotive-Grade part number is included on shipping labels.
5. Additional Ordering Part Numbers may be available in Automotive-Grade. Please contact your local Silicon Labs sales representative for further information.

Table of Contents

1. Ordering Guide . . . 2

2. System Overview . . . 8

2.1 Top Level Block Diagrams . . . 8

2.2 Functional Description . . . 10

2.3 Typical Operating Characteristics (0.5 Amp) . . . 11

2.4 Typical Operating Characteristics (4.0 Amp) . . . 14

2.5 Family Overview and Logic Operation During Startup . . . 16

2.5.1 Products . . . 16

2.5.2 Device Behavior . . . 17

2.6 Power Supply Connections . . . 18

2.7 Power Dissipation Considerations . . . 19

2.8 Layout Considerations . . . 20

2.9 Undervoltage Lockout Operation . . . 21

2.9.1 Device Startup . . . 21

2.9.2 Undervoltage Lockout . . . 21

2.9.3 Undervoltage Lockout (UVLO) . . . 21

2.9.4 Control Inputs . . . 22

2.9.5 Disable Input . . . 22

2.10 Programmable Dead Time and Overlap Protection . . . 23

3. Electrical Specifications . . . 25

3.1 Test Circuits . . . 28

4. Applications . . . 34

4.1 High-Side/Low-Side Driver . . . 34

4.2 Dual Driver . . . 35

5. Pin Descriptions . . . 36

6. Package Outlines . . . 42

6.1 Package Outline: 16-Pin Wide Body SOIC . . . 42

6.2 Package Outline: 14-Pin Wide Body SOIC . . . 44

6.3 Package Outline: 16-Pin Narrow Body SOIC . . . 46

6.4 Package Outline: 14 LD LGA (5 x 5 mm) . . . 47

6.5 Package Outline: 14 LD QFN . . . 48

7. Land Patterns . . . 49

7.1 Land Pattern: 16-Pin Wide Body SOIC . . . 49

7.2 Land Pattern: 14-Pin Wide Body SOIC . . . 50

7.3 Land Pattern: 16-Pin Narrow Body SOIC . . . 51

7.4 Land Pattern: 14 LD LGA/QFN . . . 52

8. Top Markings 53
8.1 Si823x Top Marking (14/16-Pin Wide Body SOIC). 53
8.2 Si823x Top Marking (16-Pin Narrow Body SOIC) 54
8.3 Si823x Top Marking (14 LD LGA/QFN) 55
9. Revision History 56

2. System Overview

2.1 Top Level Block Diagrams

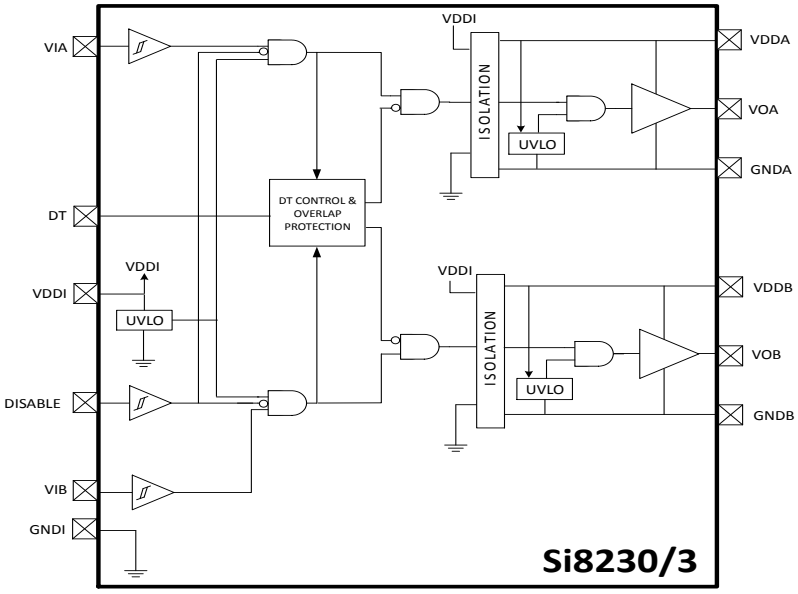

Figure 2.1. Si8230/3 Two-Input High-Side/Low-Side Isolated Drivers

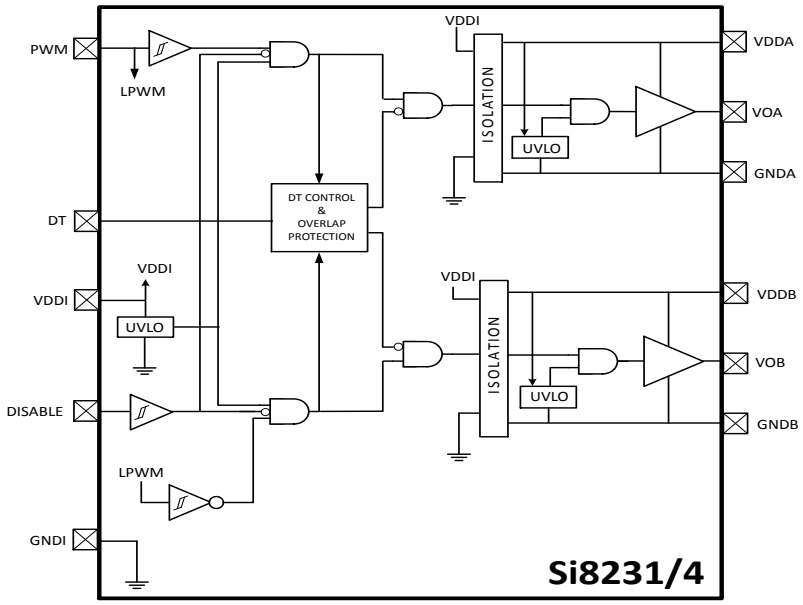

Figure 2.2. Si8231/4 Single-Input High-Side/Low-Side Isolated Drivers

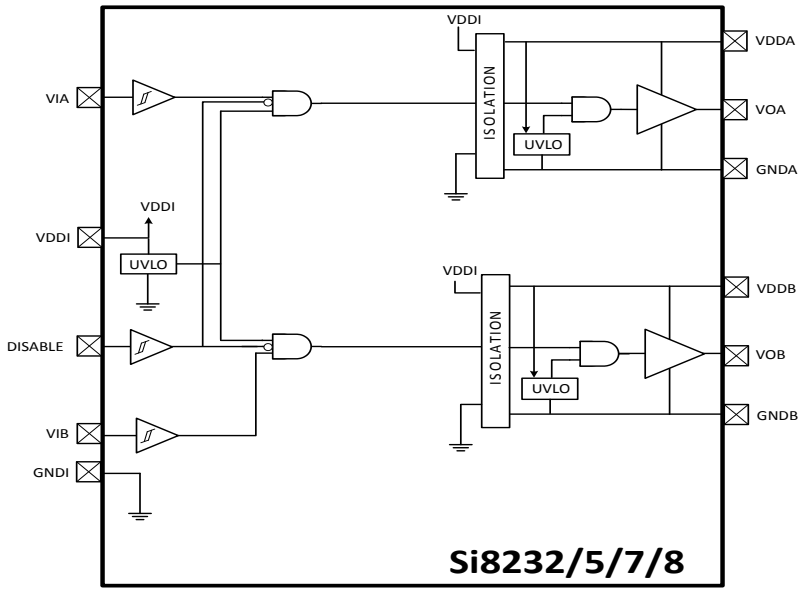

Figure 2.3. Si8232/5/7/8 Dual Isolated Drivers

2.2 Functional Description

The operation of an Si823x channel is analogous to that of an optocoupler and gate driver, except an RF carrier is modulated instead of light. This simple architecture provides a robust isolated data path and requires no special considerations or initialization at start-up. A simplified block diagram for a single Si823x channel is shown in the figure below.

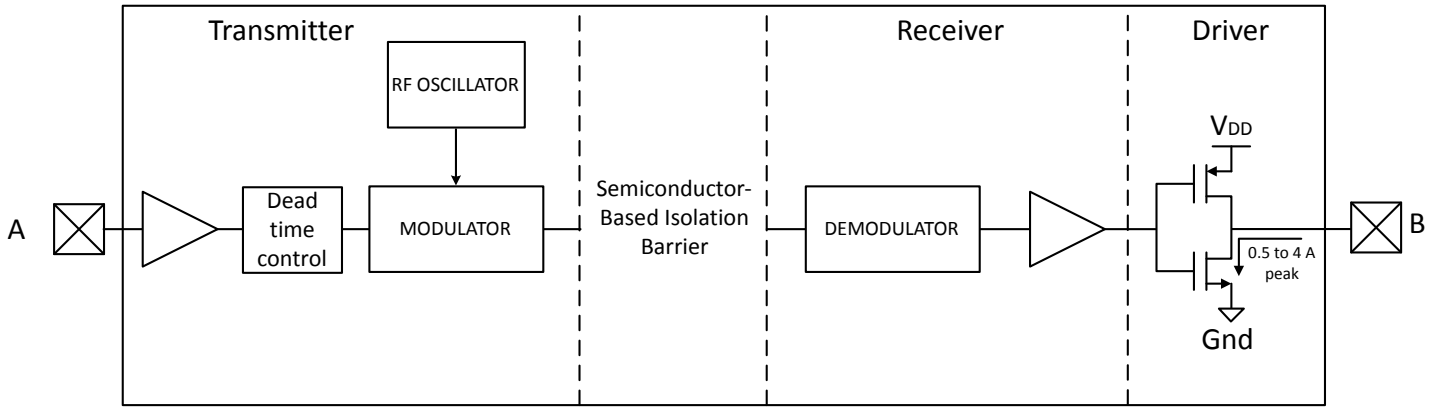

Figure 2.4. Simplified Channel Diagram

A channel consists of an RF Transmitter and RF Receiver separated by a semiconductor-based isolation barrier. Referring to the Transmitter, input A modulates the carrier provided by an RF oscillator using on/off keying. The Receiver contains a demodulator that decodes the input state according to its RF energy content and applies the result to output B via the output driver. This RF on/off keying scheme is superior to pulse code schemes as it provides best-in-class noise immunity, low power consumption, and better immunity to magnetic fields. See the figure below for more details.

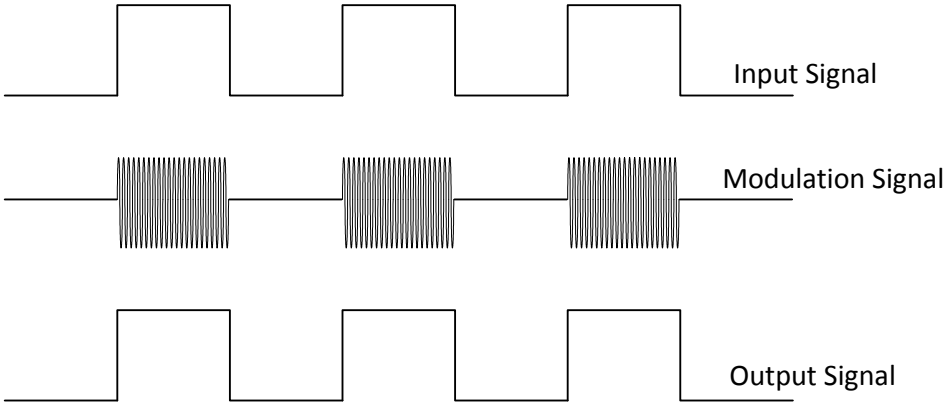

Figure 2.5. Modulation Scheme

2.3 Typical Operating Characteristics (0.5 Amp)

The typical performance characteristics depicted in Figure 2.6 Rise/Fall Time vs. Supply Voltage on page 11 through Figure 2.15 Output Source Current vs. Temperature on page 12 are for information purposes only. Refer to Table 3.1 Electrical Characteristics[1] on page 25 for actual specification limits.

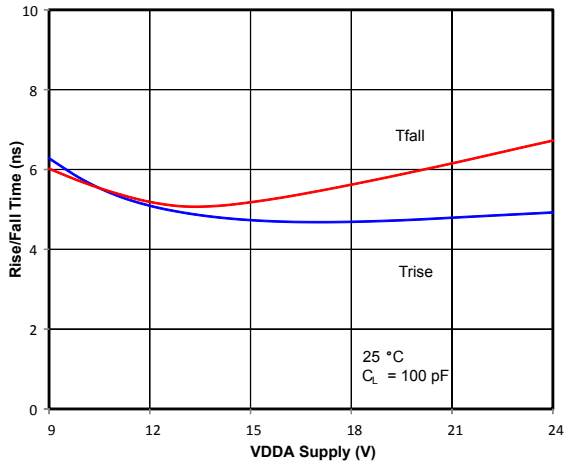

Figure 2.6. Rise/Fall Time vs. Supply Voltage

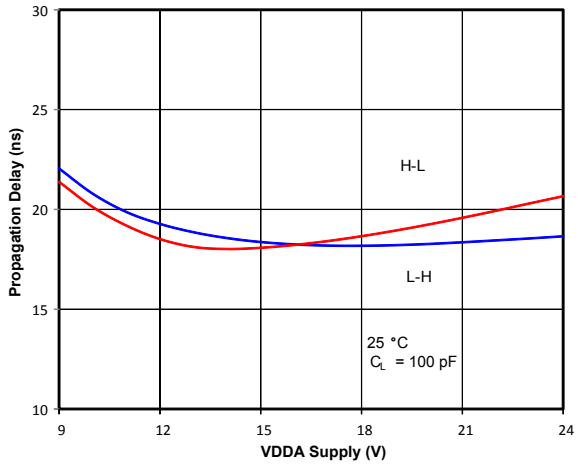

Figure 2.7. Propagation Delay vs. Supply Voltage

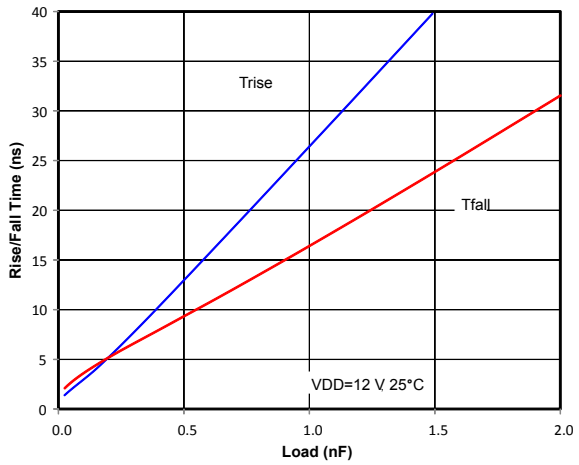

Figure 2.8. Rise/Fall Time vs. Load

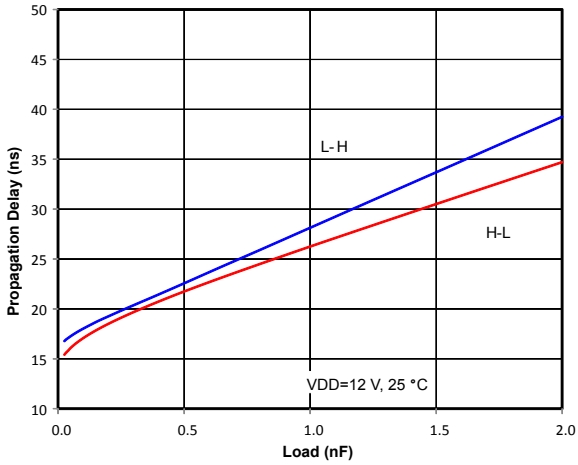

Figure 2.9. Propagation Delay vs. Load

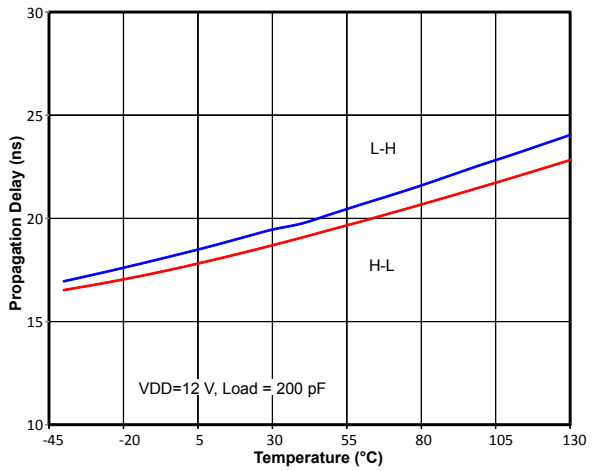

Figure 2.10. Propagation Delay vs. Temperature

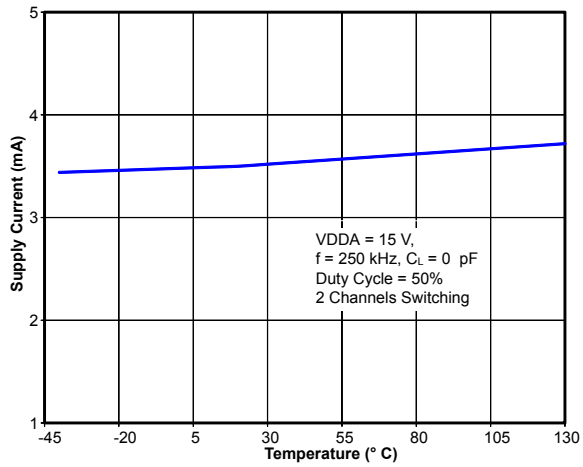

Figure 2.11. Supply Current vs. Temperature

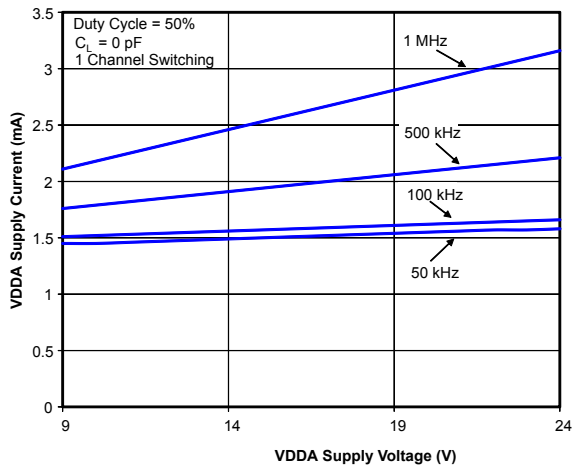

Figure 2.12. Supply Current vs. Supply Voltage

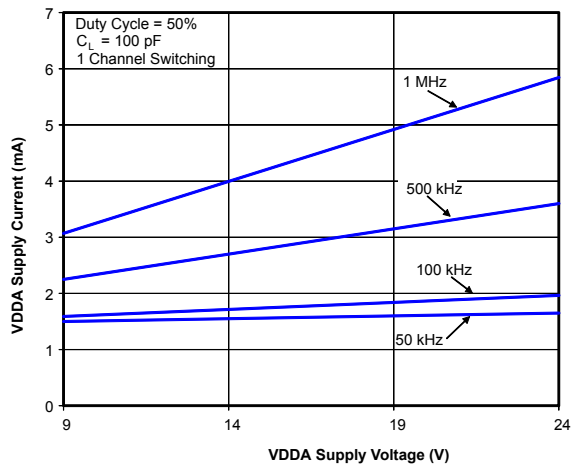

Figure 2.13. Supply Current vs. Supply Voltage

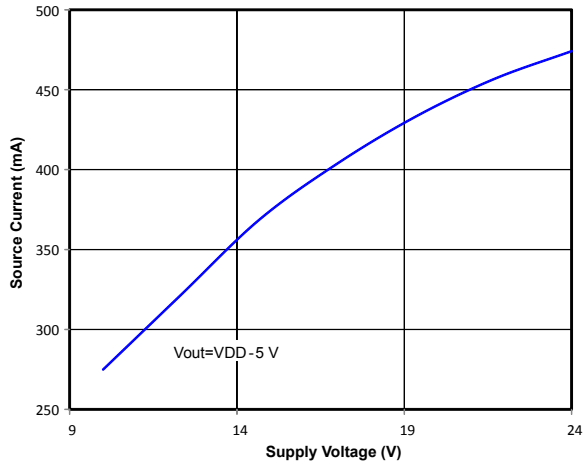

Figure 2.14. Output Source Current vs. Supply Voltage

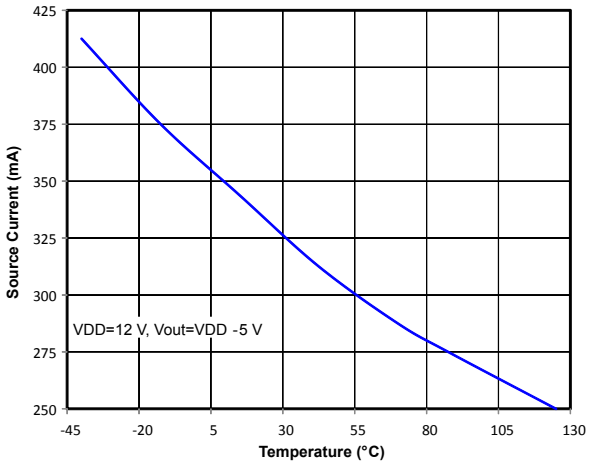

Figure 2.15. Output Source Current vs. Temperature

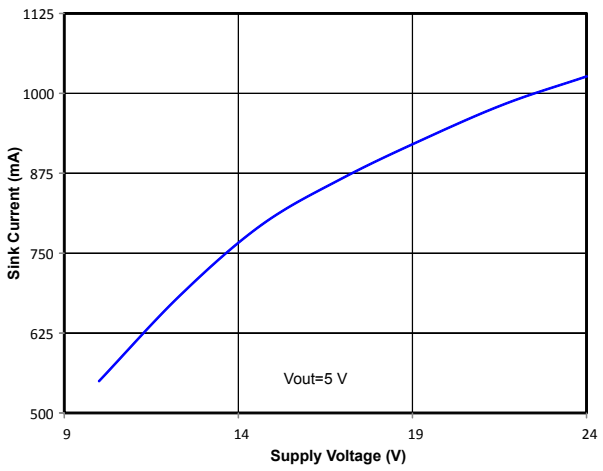

Figure 2.16. Output Sink Current vs. Supply Voltage

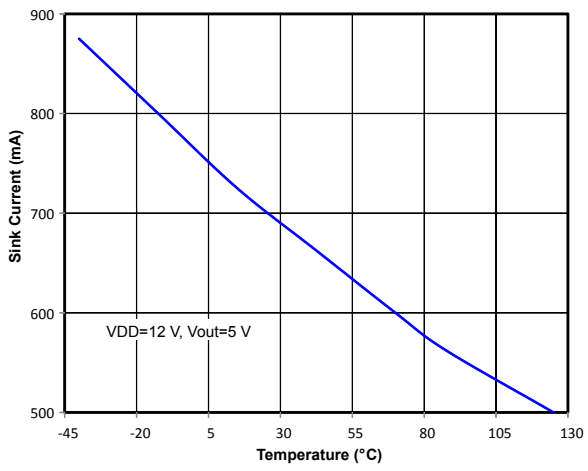

Figure 2.17. Output Sink Current vs. Temperature

2.4 Typical Operating Characteristics (4.0 Amp)

The typical performance characteristics depicted in Figure 2.18 Rise/Fall Time vs. Supply Voltage on page 14 through Figure 2.27 Output Source Current vs. Temperature on page 15 are for information purposes only. Refer to Table 3.1 Electrical Characteristics[1] on page 25 for actual specification limits.

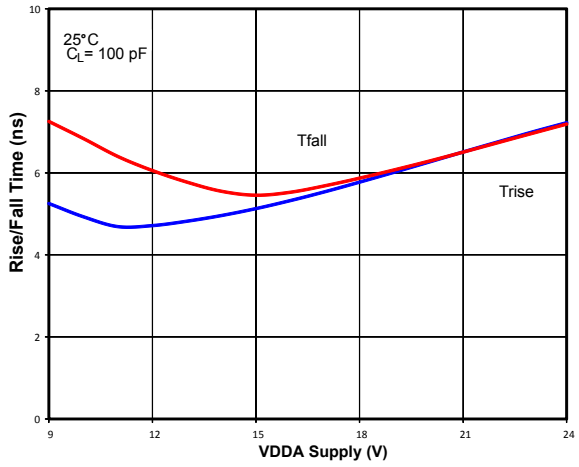

Figure 2.18. Rise/Fall Time vs. Supply Voltage

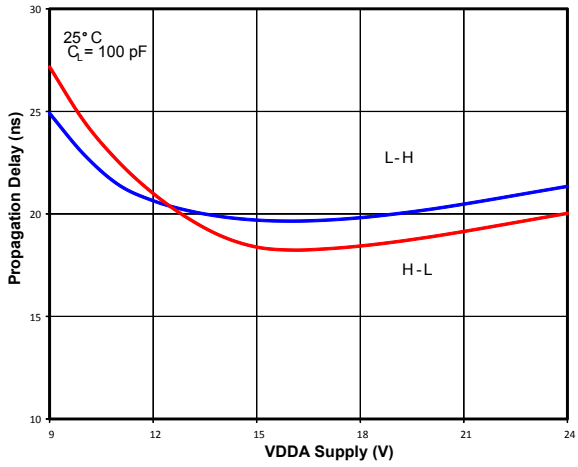

Figure 2.19. Propagation Delay vs. Supply Voltage

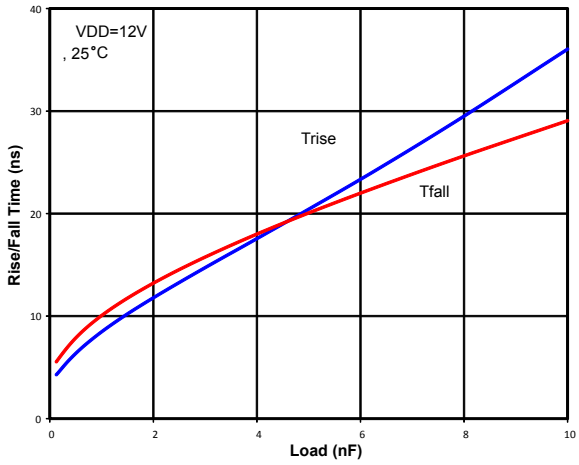

Figure 2.20. Rise/Fall Time vs. Load

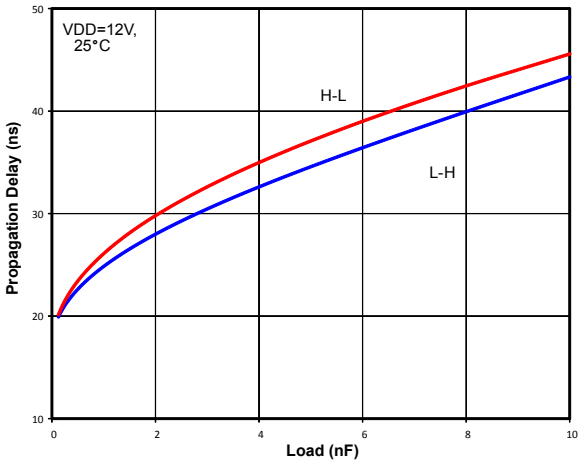

Figure 2.21. Propagation Delay vs. Load

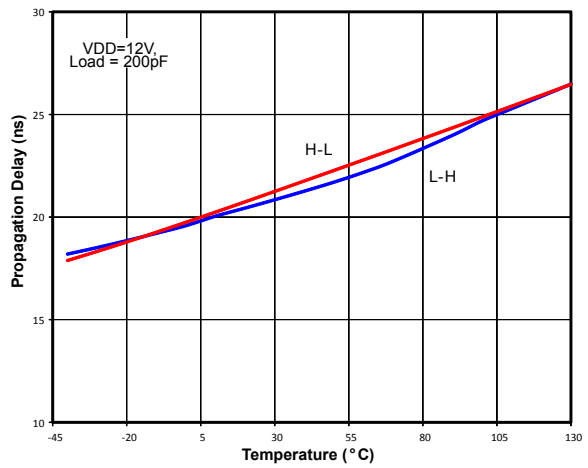

Figure 2.22. Propagation Delay vs. Temperature

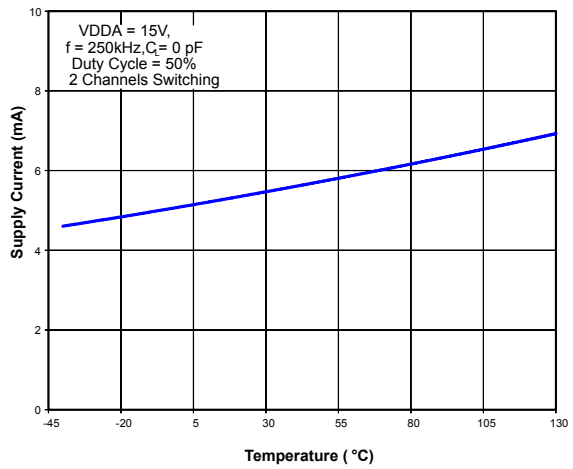

Figure 2.23. Supply Current vs. Temperature

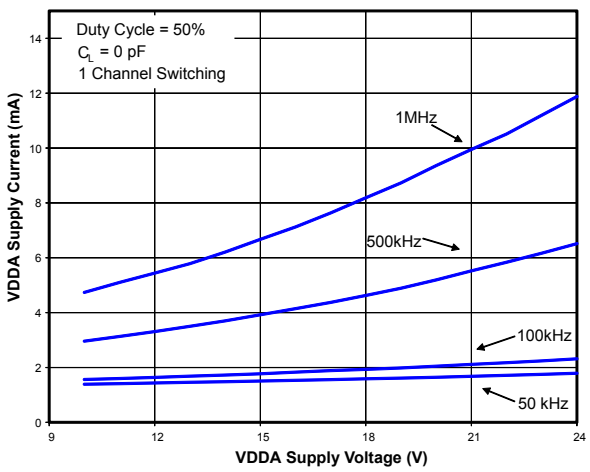

Figure 2.24. Supply Current vs. Supply Voltage

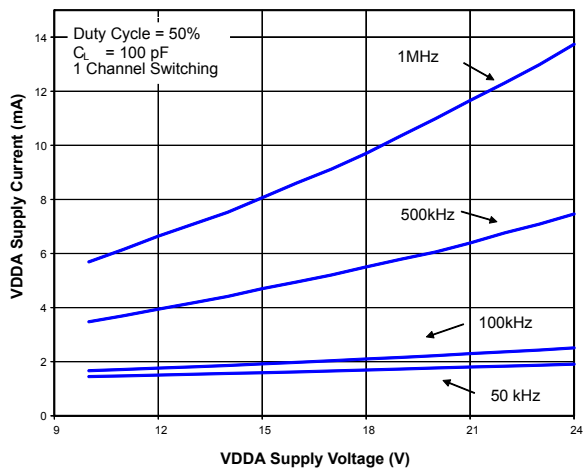

Figure 2.25. Supply Current vs. Supply Voltage

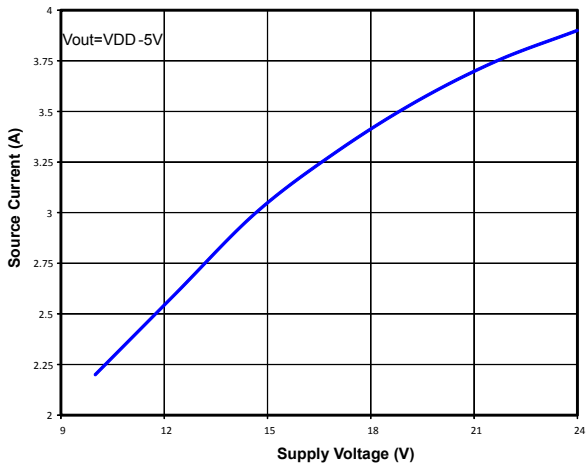

Figure 2.26. Output Source Current vs. Supply Voltage

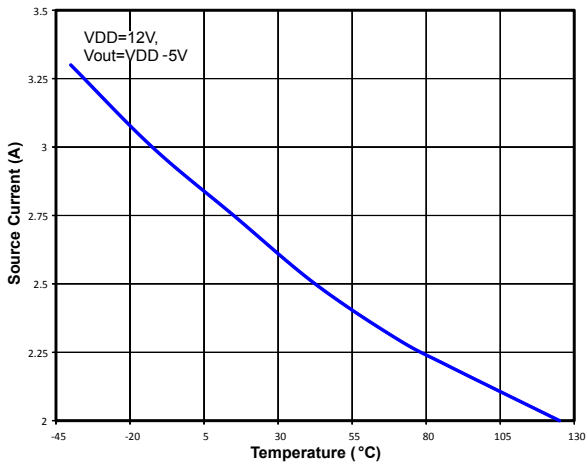

Figure 2.27. Output Source Current vs. Temperature

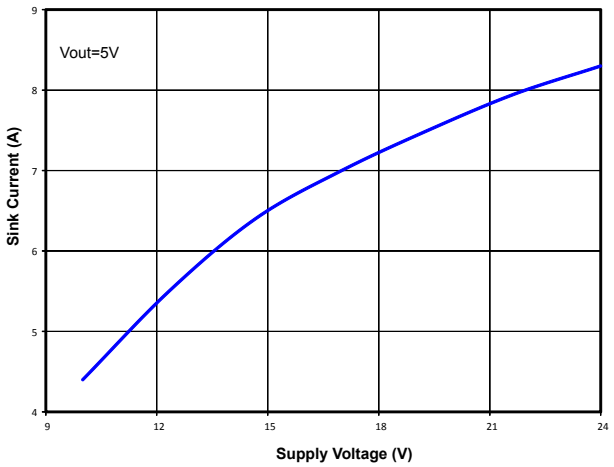

Figure 2.28. Output Sink Current vs. Supply Voltage

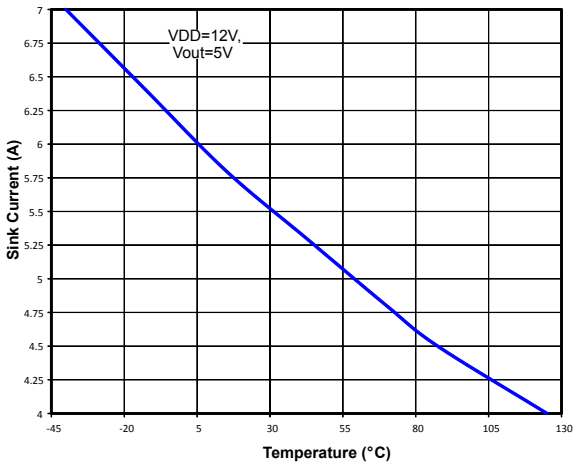

Figure 2.29. Output Sink Current vs. Temperature

2.5 Family Overview and Logic Operation During Startup

The Si823x family of isolated drivers consists of high-side, low-side, and dual driver configurations.

2.5.1 Products

The table below shows the configuration and functional overview for each product in this family.

Table 2.1. Si823x Family Overview

Part Number	Configuration	Overlap Protection	Programmable Dead Time	Inputs	Peak Output Current (A)
Si8230	High-Side/Low-Side	√	√	VIA, VIB	0.5
Si8231	High-Side/Low-Side	√	√	PWM	0.5
Si8232/7	Dual Driver	—	—	VIA, VIB	0.5
Si8233	High-Side/Low-Side	√	√	VIA, VIB	4.0
Si8234	High-Side/Low-Side	√	√	PWM	4.0
Si8235/8	Dual Driver	—	—	VIA, VIB	4.0

2.5.2 Device Behavior

The table below consists of truth tables for the Si8230/3, Si8231/4, and Si8232/5/7/8 families.

Table 2.2. Si823x Family Truth Table[1]

Si8230/3 (High-Side/Low-Side) Truth Table						
Inputs		**VDDI State**	**Disable**	**Output**		**Notes**
VIA	**VIB**			**VOA**	**VOB**	
L	L	Powered	L	L	L	Output transition occurs after internal dead time expires.
L	H	Powered	L	L	H	Output transition occurs after internal dead time expires.
H	L	Powered	L	H	L	Output transition occurs after internal dead time expires.
H	H	Powered	L	L	L	Invalid state. Output transition occurs after internal dead time expires.
X[2]	X[2]	Unpowered	X	L	L	Output returns to input state within 7 µs of VDDI power restoration.
X	X	Powered	H	L	L	Device is disabled.
Si8231/4 (PWM Input High-Side/Low-Side) Truth Table						
PWM Input		**VDDI State**	**Disable**	**Output**		**Notes**
				VOA	**VOB**	
H		Powered	L	H	L	Output transition occurs after internal dead time expires.
L		Powered	L	L	H	Output transition occurs after internal dead time expires.
X[2]		Unpowered	X	L	L	Output returns to input state within 7 µs of VDDI power restoration.
X		Powered	H	L	L	Device is disabled.
Si8232/5/7/8 (Dual Driver) Truth Table						
Inputs		**VDDI State**	**Disable**	**Output**		**Notes**
VIA	**VIB**			**VOA**	**VOB**	
L	L	Powered	L	L	L	Output transition occurs immediately (no internal dead time).
L	H	Powered	L	L	H	Output transition occurs immediately (no internal dead time).
H	L	Powered	L	H	L	Output transition occurs immediately (no internal dead time).
H	H	Powered	L	H	H	Output transition occurs immediately (no internal dead time).
X[2]	X[2]	Unpowered	X	L	L	Output returns to input state within 7 µs of VDDI power restoration.
X	X	Powered	H	L	L	Device is disabled.

Notes:

1. This truth table assumes VDDA and VDDB are powered. If VDDA and VDDB are below UVLO, see 2.9 Undervoltage Lockout Operation for more information.
2. Note that an input can power the input die through an internal diode if its source has adequate current.

2.6 Power Supply Connections

Isolation requirements mandate individual supplies for VDDI, VDDA, and VDDB. The decoupling caps for these supplies must be placed as close to the VDD and GND pins of the Si823x as possible. The optimum values for these capacitors depend on load current and the distance between the chip and the regulator that powers it. Low effective series resistance (ESR) capacitors, such as Tantalum, are recommended.

2.7 Power Dissipation Considerations

Proper system design must assure that the Si823x operates within safe thermal limits across the entire load range.The Si823x total power dissipation is the sum of the power dissipated by bias supply current, internal parasitic switching losses, and power dissipated by the series gate resistor and load. Equation 1 shows total Si823x power dissipation.

$$P_D = (V_{DDI})(I_{DDI}) + 2(I_{DD2})(V_{DD2}) + (f)(Q_{TL})(V_{DD2})\left[\frac{R_p}{R_p + R_g}\right] + (f)(Q_{TL})(V_{DD2})\left[\frac{R_p}{R_p + R_g}\right] + 2fCintV_{DD2}^2$$

where:

P_D is the total Si823x device power dissipation (W)

I_{DDI} is the input-side maximum bias current (3 mA)

I_{DD2} is the driver die maximum bias current (2.5 mA)

C_{int} is the internal parasitic capacitance (75 pF for the 0.5 A driver and 370 pF for the 4.0 A driver)

VDDI is the input-side VDD supply voltage (2.7 to 5.5 V)

V_{DD2} is the driver-side supply voltage (10 to 24 V)

f is the switching frequency (Hz)

Q_{TL} is the gate charge of the FET being driven

R_G is the external gate resistor

R_P is the $R_{DS(ON)}$ of the driver pull-up switch: (Rp = 15 Ω for the 0.5 A driver; Rp = 2.7 Ω for the 4.0 A driver)

R_n is the $R_{DS(ON)}$ of the driver pull-down switch: (Rn = 5 Ω for the 0.5 A driver and 1 Ω for the 4.0 A driver)

Equation 1

Power dissipation example for 0.5 A driver using Equation 1 with the following givens:

V_{DDI} = 5.0 V

V_{DD2} = 12 V

f = 350 kHz

R_G = 22 Ω

Q_{TL} = 25 nC

$$Pd = 0.015 + 0.060 + (350 \times 10^3)(25 \times 10^{-9})(12)\left[\frac{5}{5 + 22}\right] + 2[(350 \times 10^3)(75 \times 10^{-12})(144)] = 145 \text{ mW}$$

From which the driver junction temperature is calculated using Equation 2, where:

Pd is the total Si823x device power dissipation (W)

θja is the thermal resistance from junction to air (105 °C/W in this example)

T_A is the ambient temperature

$$T_j = P_d \times \Theta_{ja} \times T_A = (0.145)(105) + 20 = 35.2^oC$$

The maximum power dissipation allowable for the Si823x is a function of the package thermal resistance, ambient temperature, and maximum allowable junction temperature, as shown in Equation 2:

$$P_{Dmax} \leq \frac{T_{jmax} - T_A}{\Theta ja}$$

where:

P_{Dmax} = Maximum Si823x power dissipation (W)

T_{jmax} = Si823x maximum junction temperature (150 °C)

T_A = Ambient temperature (°C)

Θja = Si823x junction-to-air thermal resistance (105 °C/W)

f = Si823x switching frequency (Hz)

Equation 2

Substituting values for P_{Dmax} T_{jmax}, T_A, and θ_{ja} into Equation 2 results in a maximum allowable total power dissipation of 1.19 W. Maximum allowable load is found by substituting this limit and the appropriate data sheet values from Table 3.1 Electrical Characteristics[1] on page 25 into Equation 1 and simplifying. The result is Equation 3 (0.5 A driver) and Equation 4 (4.0 A driver), both of which assume VDDI = 5 V and VDDA = VDDB = 18 V.

$$C_{L(MAX)} = \frac{1.4 \times 10^{-3}}{f} - 7.5 \times 10^{-11}$$

Equation 3

$$C_{L(MAX)} = \frac{1.4 \times 10^{-3}}{f} - 3.7 \times 10^{-10}$$

Equation 4

Equation 3 and Equation 4 are graphed in the figure below, where the points along the load line represent the package dissipation-limited value of CL for the corresponding switching frequency.

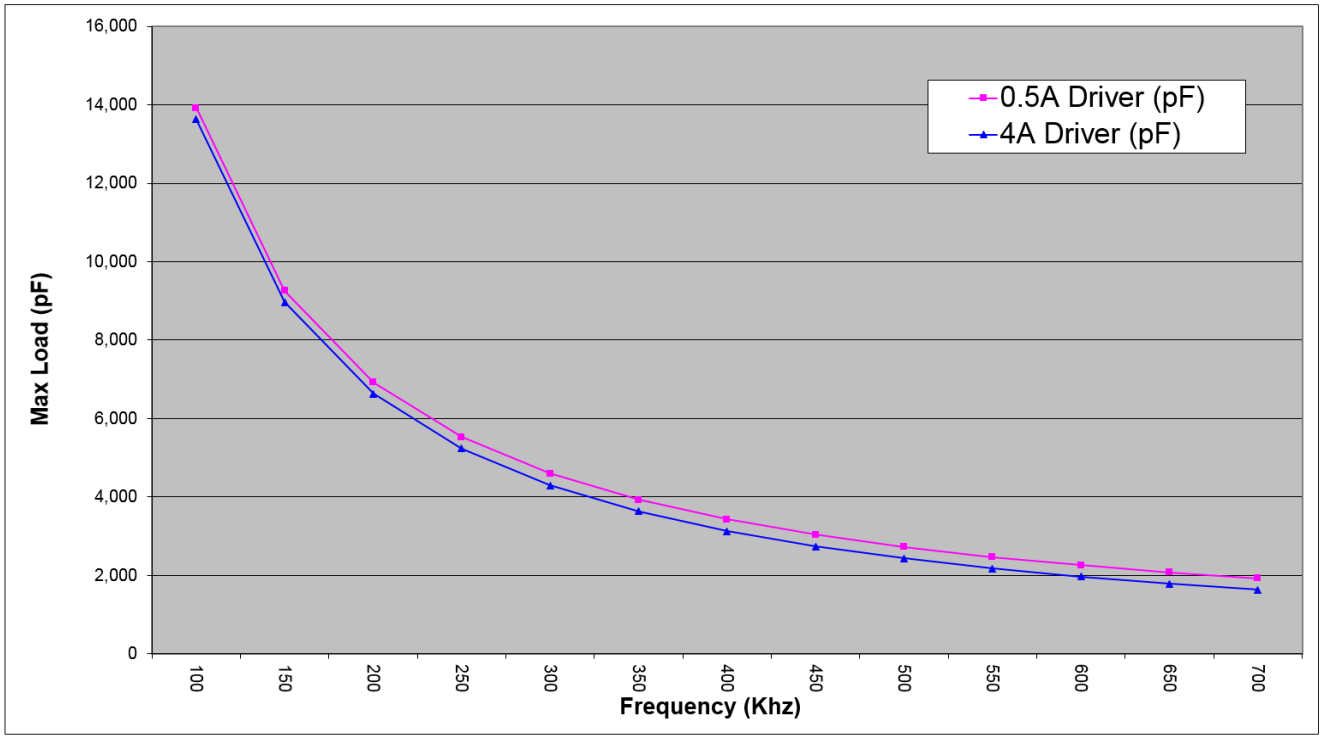

2.8 Layout Considerations

It is most important to minimize ringing in the drive path and noise on the Si823x VDD lines. Care must be taken to minimize parasitic inductance in these paths by locating the Si823x as close to the device it is driving as possible. In addition, the VDD supply and ground trace paths must be kept short. For this reason, the use of power and ground planes is highly recommended. A split ground plane system having separate ground and VDD planes for power devices and small signal components provides the best overall noise performance.

2.9 Undervoltage Lockout Operation

Device behavior during start-up, normal operation and shutdown is shown in Figure 2.30 Device Behavior during Normal Operation and Shutdown on page 21, where UVLO+ and UVLO- are the positive-going and negative-going thresholds respectively. Note that outputs VOA and VOB default low when input side power supply (VDDI) is not present.

2.9.1 Device Startup

Outputs VOA and VOB are held low during power-up until VDD is above the UVLO threshold for time period tSTART. Following this, the outputs follow the states of inputs VIA and VIB.

2.9.2 Undervoltage Lockout

Undervoltage Lockout (UVLO) is provided to prevent erroneous operation during device startup and shutdown or when VDD is below its specified operating circuits range. The input (control) side, Driver A and Driver B, each have their own undervoltage lockout monitors.

The Si823x input side enters UVLO when VDDI $\leq$ $VDDI_{UV-}$, and exits UVLO when VDDI > $VDDI_{UV+}$. The driver outputs, VOA and VOB, remain low when the input side of the Si823x is in UVLO and their respective VDD supply (VDDA, VDDB) is within tolerance. Each driver output can enter or exit UVLO independently. For example, VOA unconditionally enters UVLO when VDDA falls below $VDDA_{UV-}$ and exits UVLO when VDDA rises above $VDDA_{UV+}$.

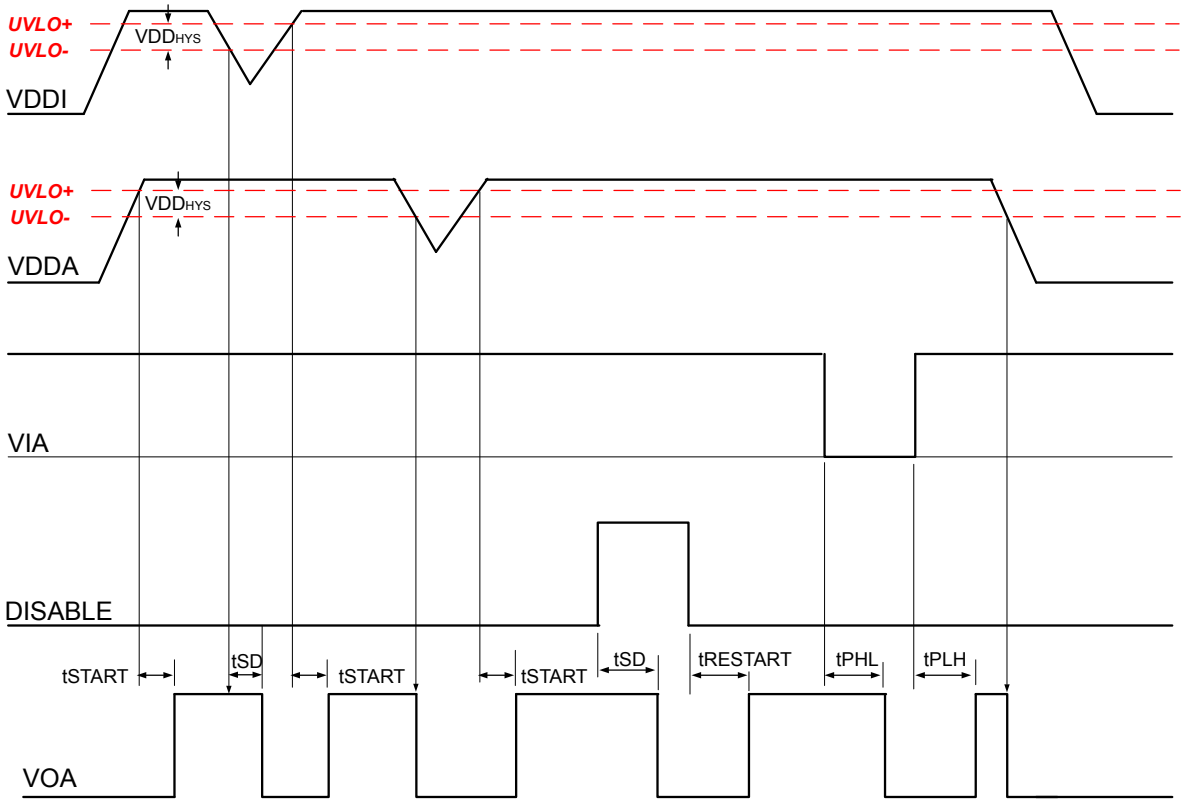

Figure 2.30. Device Behavior during Normal Operation and Shutdown

2.9.3 Undervoltage Lockout (UVLO)

The UVLO circuit unconditionally drives VO low when VDD is below the lockout threshold. Upon power up, the Si823x is maintained in UVLO until VDD rises above VDD_{UV+}. During power down, the Si823x enters UVLO when VDD falls below the UVLO threshold plus hysteresis (i.e., VDD $\leq$ VDD_{UV+} – VDD_{HYS}).

2.9.4 Control Inputs

VIA, VIB, and PWM inputs are high-true, TTL level-compatible logic inputs. A logic high signal on VIA or VIB causes the corresponding output to go high. For PWM input versions (Si8231/4), VOA is high and VOB is low when the PWM input is high, and VOA is low and VOB is high when the PWM input is low.

2.9.5 Disable Input

When brought high, the DISABLE input unconditionally drives VOA and VOB low regardless of the states of VIA and VIB. Device operation terminates within tSD after DISABLE =V_{IH} and resumes within tRESTART after DISABLE = V_{IL}. The DISABLE input has no effect if VDDI is below its UVLO level (i.e., VOA, VOB remain low).

2.10 Programmable Dead Time and Overlap Protection

All high-side/low-side drivers (Si8230/1/3/4) include programmable overlap protection to prevent outputs VOA and VOB from being high at the same time. These devices also include programmable dead time, which adds a user-programmable delay between transitions of VOA and VOB. When enabled, dead time is present on all transitions, even after overlap recovery. The amount of dead time delay (DT) is programmed by a single resistor (RDT) connected from the DT input to ground per Equation 5. Note that the dead time pin can be tied to VDDI or left floating to provide a nominal dead time at approximately 400 ps.

$$DT \approx 10 \times RDT$$

where:

DT = dead time (ns) and

RDT = dead time programing resistor (kΩ)

Equation 5

The device driving VIA and VIB should provide a minimum dead time of TDD to avoid activating overlap protection. Input/output timing waveforms for the two-input drivers are shown in Figure 2.31 Input / Output Waveforms for High-Side / Low-Side Two-Input Drivers on page 23, and dead time waveforms are shown in Figure 2.32 Dead Time Waveforms for High-Side / Low-Side Two-input Drivers on page 24.

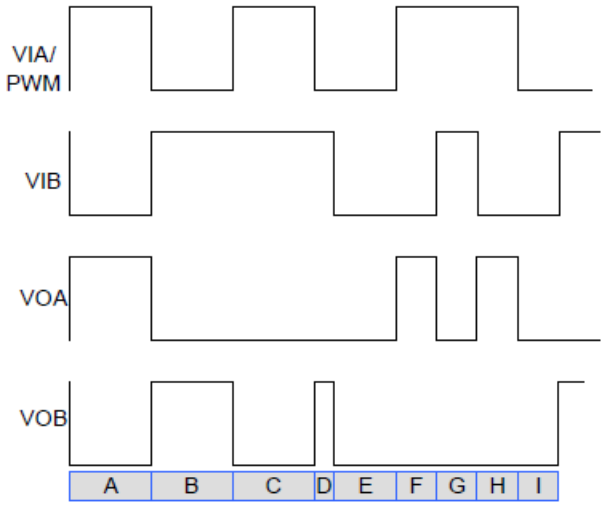

Ref	Description
A	Normal operation: VIA high, VIB low.
B	Normal operation: VIB high, VIA low.
C	Contention: VIA = VIB = high.
D	Recovery from contention: VIA transitions low.
E	Normal operation: VIA = VIB = low.
F	Normal operation: VIA high, VIB low.
G	Contention: VIA = VIB = high.
H	Recovery from contention: VIB transitions low.
I	Normal operation: VIB transitions high.

Figure 2.31. Input / Output Waveforms for High-Side / Low-Side Two-Input Drivers

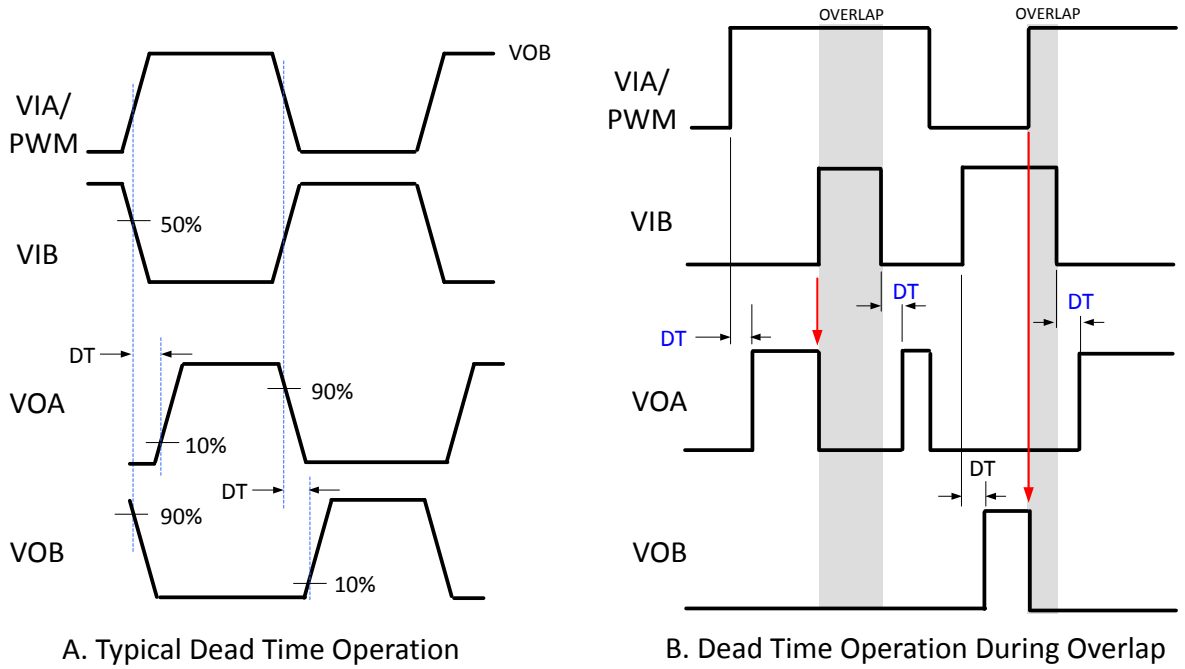

Figure 2.32. Dead Time Waveforms for High-Side / Low-Side Two-input Drivers

3. Electrical Specifications

Table 3.1. Electrical Characteristics[1]

2.7 V < VDDI < 5.5 V, VDDA = VDDB = 12 V or 15 V, TA = –40 to +125 °C, Typical specs at 25 °C, T_J = -40 to +150 °C

Parameter	Symbol	Test Condition	Min	Typ	Max	Unit
DC Specifications						
Input-side Power Supply Voltage	VDDI	Si8230/1/2/3/4/5	4.5	—	5.5	V
		Si8237/8	2.7	—	5.5	
Driver Supply Voltage	VDDA, VDDB	Voltage between VDDA and GNDA, and VDDB and GNDB (See 1. Ordering Guide)	6.5	—	24	V
Input Supply Quiescent Current	IDDI(Q)	Si8230/2/3/5/7/8	—	2	3	mA
		Si8231/4	—	3.5	5	mA
Output Supply Quiescent Current	IDDA(Q), IDDB(Q)	Current per channel	—	—	3.0	mA
Input Supply Active Current	IDDI	Input freq = 500 kHz, no load	—	3.5	—	mA
Output Supply Active Current	IDDA IDDB	Current per channel with Input freq = 500 kHz, no load	—	6	—	mA
Input Pin Leakage Current	IVIA, IVIB, IPWM		–10	—	+10	µA dc
Input Pin Leakage Current (Si8230/1/2/3/4/5)	IDISABLE		–10	—	+10	µA dc
Input Pin Leakage Current (Si8237/8)			-1000	+1000		
Logic High Input Threshold	VIH		2.0	—	—	V
Logic Low Input Threshold	VIL		—	—	0.8	V
Input Hysteresis	VI_{HYST}	Si8230/1/2/3/4/5/7/8	400	450	—	mV
Logic High Output Voltage	VOAH, VOBH	IOA, IOB = –1 mA	(VDDA / VDDB) — 0.04	—	—	V
Logic Low Output Voltage	VOAL, VOBL	IOA, IOB = 1 mA	—	—	0.04	V
Output Short-Circuit Pulsed Sink Current	IOA(SCL), IOB(SCL)	Si8230/1/2/7, Figure 3.1 IOL Sink Current Test Circuit on page 28	—	0.5	—	A
		Si8233/4/5/8, Figure 3.1 IOL Sink Current Test Circuit on page 28	—	4.0	—	A
Output Short-Circuit Pulsed Source Current	IOA(SCH), IOB(SCH)	Si8230/1/2/7, Figure 3.2 IOH Source Current Test Circuit on page 28	—	0.25	—	A
		Si8233/4/5/8, Figure 3.2 IOH Source Current Test Circuit on page 28	—	2.0	—	A

Parameter	Symbol	Test Condition	Min	Typ	Max	Unit
Output Sink Resistance	$R_{ON(SINK)}$	Si8230/1/2/7	—	5.0	—	Ω
		Si8233/4/5/8	—	1.0	—	Ω
Output Source Resistance	$R_{ON(SOURCE)}$	Si8230/1/2/7	—	15	—	Ω
		Si8233/4/5/8	—	2.7	—	Ω
VDDI Undervoltage Threshold	$VDDI_{UV+}$	VDDI rising (Si8230/1/2/3/4/5)	3.60	4.0	4.45	V
VDDI Undervoltage Threshold	$VDDI_{UV-}$	VDDI falling (Si8230/1/2/3/4/5)	3.30	3.70	4.15	V
VDDI Lockout Hysteresis	$VDDI_{HYS}$	(Si8230/1/2/3/4/5)	—	250	—	mV
VDDI Undervoltage Threshold	$VDDI_{UV+}$	VDDI rising (Si8237/8)	2.15	2.3	2.5	V
VDDI Undervoltage Threshold	$VDDI_{UV-}$	VDDI falling (Si8237/8)	2.10	2.22	2.40	V
VDDI Lockout Hysteresis	$VDDI_{HYS}$	(Si8237/8)	—	75	—	mV
VDDA, VDDB Undervoltage Threshold	$VDDA_{UV+}$, $VDDB_{UV+}$	VDDA, VDDB rising				
5 V Threshold			5.20	5.80	6.30	V
8 V Threshold			7.50	8.60	9.40	V
10 V Threshold			9.60	11.1	12.2	V
12.5 V Threshold			12.4	13.8	14.8	V
VDDA, VDDB Undervoltage Threshold	$VDDA_{UV-}$, $VDDB_{UV-}$	VDDA, VDDB falling				
5 V Threshold			4.90	5.52	6.0	V
8 V Threshold			7.20	8.10	8.70	V
10 V Threshold			9.40	10.1	10.9	V
12.5 V Threshold			11.6	12.8	13.8	V
VDDA, VDDB Lockout Hysteresis	$VDDA_{HYS}$, $VDDB_{HYS}$	UVLO voltage = 5 V	—	280	—	mV
VDDA, VDDB Lockout Hysteresis	$VDDA_{HYS}$, $VDDB_{HYS}$	UVLO voltage = 8 V	—	600	—	mV
VDDA, VDDB Lockout Hysteresis	$VDDA_{HYS}$, $VDDB_{HYS}$	UVLO voltage = 10 V or 12.5 V	—	1000	—	mV
AC Specifications						
Minimum Pulse Width			—	10	—	ns
Propagation Delay	t_{PHL}, t_{PLH}	CL = 200 pF	—	30	45	ns
Pulse Width Distortion $\lvert t_{PLH} - t_{PHL} \rvert$	PWD		—	—	5.60	ns
Minimum Overlap Time[2]	TDD	DT = VDDI, No-Connect	—	0.4	—	ns

Parameter	Symbol	Test Condition	Min	Typ	Max	Unit
Programmed Dead Time[3]	DT	Figure 2.32 Dead Time Waveforms for High-Side / Low-Side Two-input Drivers on page 24, RDT = 100 k	730	900	1170	ns
		Figure 2.32 Dead Time Waveforms for High-Side / Low-Side Two-input Drivers on page 24, RDT = 6 k	55	70	75	ns
Output Rise and Fall Time	t_R,t_F	C_L = 200 pF (Si8230/1/2/7)	—	—	20	ns
		C_L = 200 pF (Si8233/4/5/8)	—	—	12	ns
Shutdown Time from Disable True	t_{SD}		—	—	60	ns
Restart Time from Disable False	$t_{RESTART}$		—	—	60	ns
Device Start-up Time	t_{START}	Time from VDD_ = VDD_UV+ to VOA, VOB = VIA, VIB	—	—	40	µs
Common Mode Transient Immunity	CMTI	VIA, VIB, PWM = VDDI or 0 V V_{CM} = 1500 V (see Figure 3.3 Common Mode Transient Immunity Test Circuit on page 29)	20	45	—	kV/µs

Notes:

1. VDDA = VDDB = 12 V for 5, 8, and 10 V UVLO devices; VDDA = VDDB = 15 V for 12.5 V UVLO devices.
2. TDD is the minimum overlap time without triggering overlap protection (Si8230/1/3/4 only).
3. The largest RDT resistor that can be used is 220 kΩ.

3.1 Test Circuits

Figures Figure 3.1 IOL Sink Current Test Circuit on page 28, Figure 3.2 IOH Source Current Test Circuit on page 28, and Figure 3.3 Common Mode Transient Immunity Test Circuit on page 29 depict sink current, source current, and common-mode transient immunity test circuits, respectively.

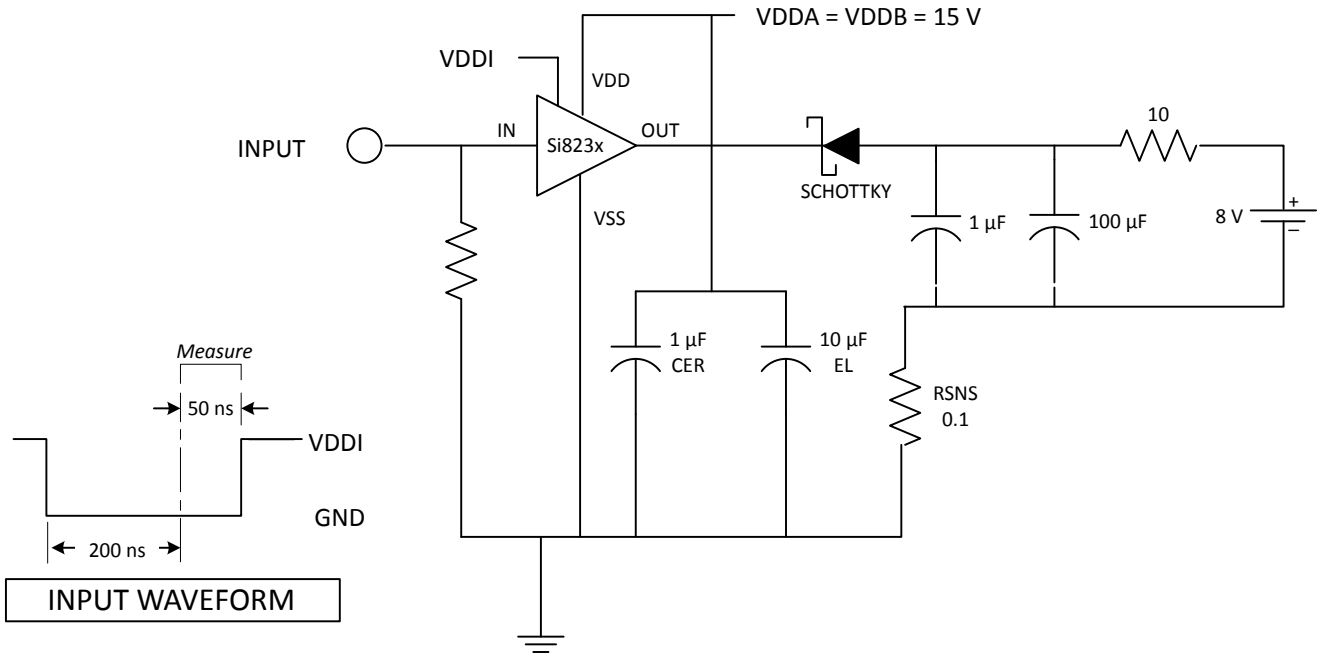

Figure 3.1. IOL Sink Current Test Circuit

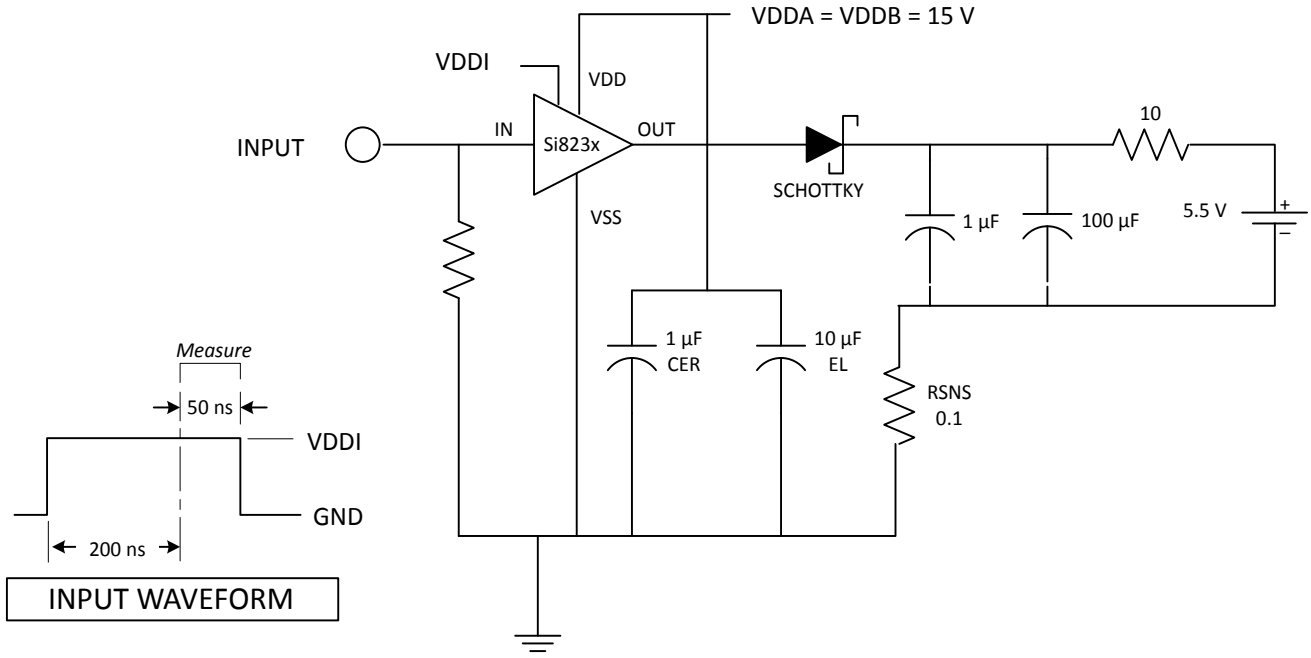

Figure 3.2. IOH Source Current Test Circuit

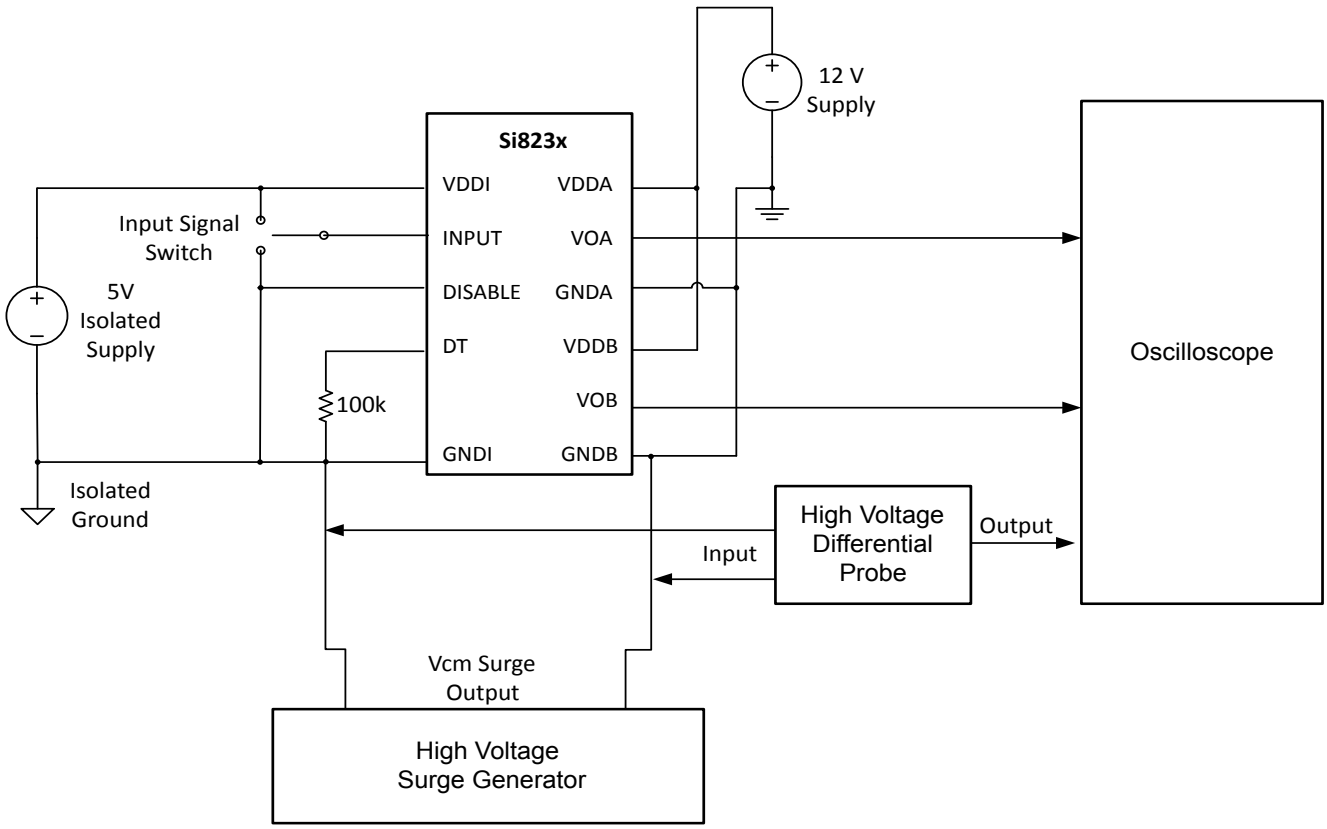

Figure 3.3. Common Mode Transient Immunity Test Circuit

Table 3.2. Regulatory Information[1]

CSA
The Si823x is certified under CSA Component Acceptance Notice 5A. For more details, see Master Contract Number 232873.
60950-1, 62368-1: Up to 600 V_{RMS} reinforced insulation working voltage; up to 1000 V_{RMS} basic insulation working voltage.
60601-1: Up to 250 V_{RMS} working voltage and 2 MOPP (Means of Patient Protection).
VDE
The Si823x is certified according to VDE 0884-10 and EN 60950-1. For more details, see certificates 40018443, 40030763.
0884-10: Up to 891 Vpeak for basic insulation working voltage.
60950-1: Up to 600 V_{RMS} reinforced insulation working voltage; up to 1000 V_{RMS} basic insulation working voltage.
UL
The Si823x is certified under UL1577 component recognition program. For more details, see File E257455.
Rated up to 5000 V_{RMS} isolation voltage for basic protection.
CQC
The Si823x is certified under GB4943.1-2011. For more details, see certificates CQC13001096106, CQC13001096108, and CQC 17001178087.
Rated up to 600 V_{RMS} reinforced insulation working voltage; up to 1000 V_{RMS} basic insulation working voltage.

Note:

1. Regulatory Certifications apply to 2.5 kV_{RMS} rated devices which are production tested to 3.0 kV_{RMS} for 1 sec. Regulatory Certifications apply to 3.75 kV_{RMS} rated devices which are production tested to 4.5 kV_{RMS} for 1 sec. Regulatory Certifications apply to 5.0 kV_{RMS} rated devices which are production tested to 6.0 kV_{RMS} for 1 sec.
   For more information, see 1. Ordering Guide.

Table 3.3. Insulation and Safety-Related Specifications

Parameter	Symbol	Test Condition	Value			Unit
			WBSOIC-14/16 5 kV_{RMS}	WBSOIC-14/16 NBSOIC-16 2.5 kV_{RMS}	14 LD LGA /QFN 2.5 kV_{RMS}	
Nominal External Air Gap (Clearance)[1]	CLR		8.0	8.0/4.01	3.5	mm
Nominal External Tracking (Creepage)[1]	CPG		8.0	8.0/4.01	3.5	mm
Minimum Internal Gap (Internal Clearance)	DTI		0.014	0.014	0.014	mm
Tracking Resistance	CTI or PTI	IEC60112	600	600	600	V
Erosion Depth	ED		0.019/0.122	0.019/0.122	0.021	mm
Resistance (Input-Output)[2]	R_{IO}		10^{12}	10^{12}	10^{12}	Ω
Capacitance (Input-Output)[2]	C_{IO}	f = 1 MHz	1.4	1.4	1.4	pF
Input Capacitance[3]	C_I		4.0	4.0	4.0	pF

Notes:

1. The values in this table correspond to the nominal creepage and clearance values as detailed in 6.1 Package Outline: 16-Pin Wide Body SOIC, 6.2 Package Outline: 14-Pin Wide Body SOIC, 6.3 Package Outline: 16-Pin Narrow Body SOIC, 6.4 Package Outline: 14 LD LGA (5 x 5 mm), 6.5 Package Outline: 14 LD QFN. VDE certifies the clearance and creepage limits as 4.7 mm minimum for the NB SOIC and 8.5 mm minimum for the WB SOIC package. UL does not impose a clearance and creepage minimum for component level certifications. CSA certifies the clearance and creepage of the WB SOIC package with designation "IS3" as 8 mm minimum. CSA certifies the clearance and creepage limits as 3.9 mm minimum for the NB SOIC and 7.6 mm minimum for the WB SOIC package with package designation "IS" as listed in the data sheet.
2. To determine resistance and capacitance, the Si823x is converted into a 2-terminal device. Pins 1–8 (1–7, 14 LD LGA/QFN) are shorted together to form the first terminal and pins 9–16 (8–14, 14 LD LGA/QFN) are shorted together to form the second terminal. The parameters are then measured between these two terminals.
3. Measured from input pin to ground.

Table 3.4. IEC 60664-1 Ratings

Parameter	Test Condition	Specification		
		WB SOIC-14/16	NB SOIC-16	14 LD LGA/QFN
Basic Isolation Group	Material Group	I	I	I
Installation Classification	Rated Mains Voltages < 150 V_{RMS}	I-IV	I-IV	I-IV
	Rated Mains Voltages < 300 V_{RMS}	I-IV	I-III	I-III
	Rated Mains Voltages < 400 V_{RMS}	I-III	I-II	I-II
	Rated Mains Voltages < 600 V_{RMS}	I-III	I-II	I-II

Table 3.5. VDE 0884-10 Insulation Characteristics[1]

Parameter	Symbol	Test Condition	Characteristic		Unit	
			WB SOIC-14/16	NB SOIC-16 14 LD LGA/QFN		
Maximum Working Insulation Voltage	V_{IORM}		891	560	V peak	
Input to Output Test Voltage	V_{PR}	Method b1 (V_{IORM} x 1.875 = V_{PR}, 100% Production Test, t_m = 1 sec, Partial Discharge < 5 pC)	1671	1050	V peak	
Transient Overvoltage	V_{IOTM}	t = 60 s	6000	4000	V peak	
Surge Voltage	V_{IOSM}	Tested per IEC 60065 with surge voltage of 1.2 µs/50 µs Si823xxB/C/D tested with 4000 V	3077	3077	3077	Vpeak
Pollution Degree (DIN VDE 0110, Table 1)			2	2		
Insulation Resistance at T_S, V_{IO} = 500 V	R_S		$>10^9$	$>10^9$	Ω	

***Note:**

1. Maintenance of the safety data is ensured by protective circuits. The Si823x provides a climate classification of 40/125/21.

Table 3.6. VDE 0884-10 Safety Limiting Values[1]

Parameter	Symbol	Test Condition	WB SOIC-14/16	NB SOIC-16	14 LD LGA/QFN	Unit
Case Temperature	T_S		150	150	150	°C
Safety Input Current	I_S	θ_{JA} = 100 °C/W (WB SOIC-14/16), 105 °C/W (NB SOIC-16, 14 LD LGA/QFN) V_{DDI} = 5.5 V, V_{DDA} = V_{DDB} = 24 V, T_J = 150 °C, T_A = 25 °C	50	50	50	mA
Device Power Dissipation[2]	P_D		1.2	1.2	1.2	W

Notes:

1. Maximum value allowed in the event of a failure. Refer to the thermal derating curve in Figures Figure 3.4 WB SOIC, NB SOIC, 14 LD LGA/QFN Thermal Derating Curve, Dependence of Safety Limiting Values with Case Temperature per VDE 0884-10 on page 32.
2. The Si82xx is tested with V_{DDI} = 5.5 V, V_{DDA} = V_{DDB} = 24 V, T_J = 150 ºC, C_L = 100 pF, input 2 MHz 50% duty cycle square wave.

Table 3.7. Thermal Characteristics

Parameter	Symbol	WB SOIC-14/16	NB SOIC-16	14 LD LGA/QFN	Unit
IC Junction-to-Air Thermal Resistance	θ_{JA}	100	105	105	°C/W

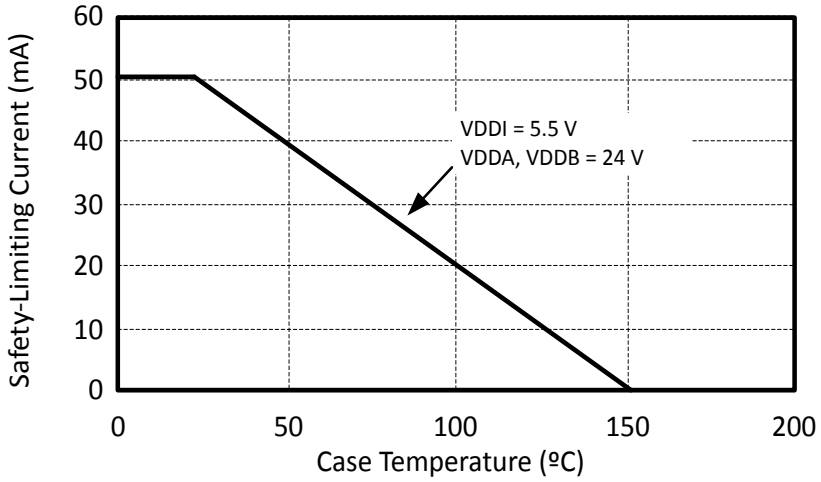

Figure 3.4. WB SOIC, NB SOIC, 14 LD LGA/QFN Thermal Derating Curve, Dependence of Safety Limiting Values with Case Temperature per VDE 0884-10

Table 3.8. Absolute Maximum Ratings[1]

Parameter	Symbol	Min	Max	Unit
Storage Temperature[2]	T_{STG}	–65	+150	°C
Ambient Temperature under Bias	T_A	–40	+125	°C
Junction Temperature	T_J	—	+150	°C
Input-side Supply Voltage	VDDI	–0.6	6.0	V
Driver-side Supply Voltage	VDDA, VDDB	–0.6	30	V
Voltage on any Pin with respect to Ground	V_{IO}	–0.5	VDD + 0.5	V
Peak Output Current (t_{PW} = 10 µs, duty cycle = 0.2%) (0.5 Amp versions)	I_{OPK}	—	0.5	A
Peak Output Current (t_{PW} = 10 µs, duty cycle = 0.2%) (4.0 Amp versions)	I_{OPK}	—	4.0	A
Lead Solder Temperature (10 s)		—	260	°C
Maximum Isolation (Input to Output) (1 s) WB SOIC		—	6500	V_{RMS}
Maximum Isolation (Output to Output) (1 s) WB SOIC		—	2500	V_{RMS}
Maximum Isolation (Input to Output) (1 s) NB SOIC		—	4500	V_{RMS}
Maximum Isolation (Output to Output) (1 s) NB SOIC		—	2500	V_{RMS}
Maximum Isolation (Input to Output) (1 s) 14 LD LGA/QFN		—	3850	V_{RMS}
Maximum Isolation (Output to Output) (1 s) 14 LD LGA/QFN		—	650	V_{RMS}

Notes:

1. Permanent device damage may occur if the absolute maximum ratings are exceeded. Functional operation should be restricted to the conditions as specified in the operational sections of this data sheet. Exposure to absolute maximum rating conditions for extended periods may affect device reliability.
2. VDE certifies storage temperature from –40 to 150 °C.

4. Applications

The following examples illustrate typical circuit configurations using the Si823x.

4.1 High-Side/Low-Side Driver

The Figure A in the drawing below shows the Si8230/3 controlled using the VIA and VIB input signals, and Figure B shows the Si8231/4 controlled by a single PWM signal.

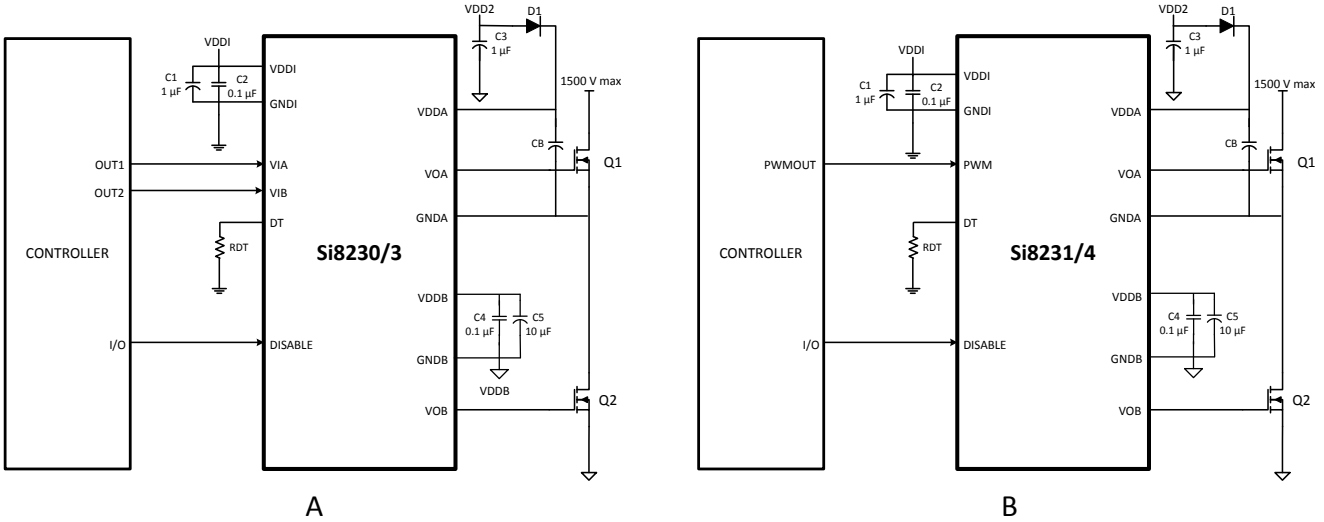

Figure 4.1. Si823x in Half-Bridge Application

For both cases, D1 and CB form a conventional bootstrap circuit that allows VOA to operate as a high-side driver for Q1, which has a maximum drain voltage of 1500 V. The boot-strap start up time will depend on the CB cap chosen. See application note, “AN486: High-Side Bootstrap Design Using Si823x ISODrivers in Power Delivery Systems”. VOB is connected as a conventional low-side driver, and, in most cases, VDD2 is the same as VDDB. Note that the input side of the Si823x requires VDD in the range of 4.5 to 5.5 V (2.7 to 5.5 V for Si8237/8), while the VDDA and VDDB output side supplies must be between 6.5 and 24 V with respect to their respective grounds. It is recommended that bypass capacitors of 0.1 and 1 µF value be used on the Si823x input side and that they be located as close to the chip as possible. Moreover, it is recommended that 0.1 and 10 µF bypass capacitors, located as close to the chip as possible, be used on the Si823x output side to reduce high-frequency noise and maximize performance.

4.2 Dual Driver

The figure below shows the Si823x configured as a dual driver. Note that the drain voltages of Q1 and Q2 can be referenced to a common ground or to different grounds with as much as 1500 V dc between them.

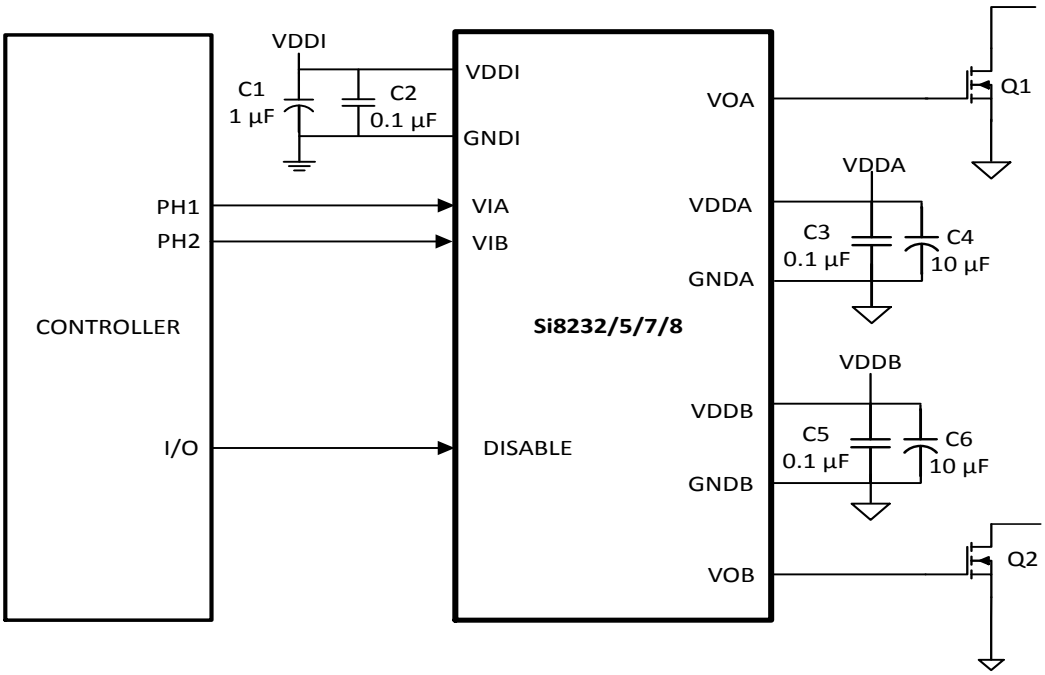

Figure 4.2. Si8232/5/7/8 in a Dual Driver Application

Because each output driver resides on its own die, the relative voltage polarities of VOA and VOB can reverse without damaging the driver. That is, the voltage at VOA can be higher or lower than that of VOB by VDD without damaging the driver. Therefore, a dual driver in a low-side high side/low side drive application can use either VOA or VOB as the high side driver. Similarly, a dual driver can operate as a dual low-side or dual high-side driver and is unaffected by static or dynamic voltage polarity changes.

5. Pin Descriptions

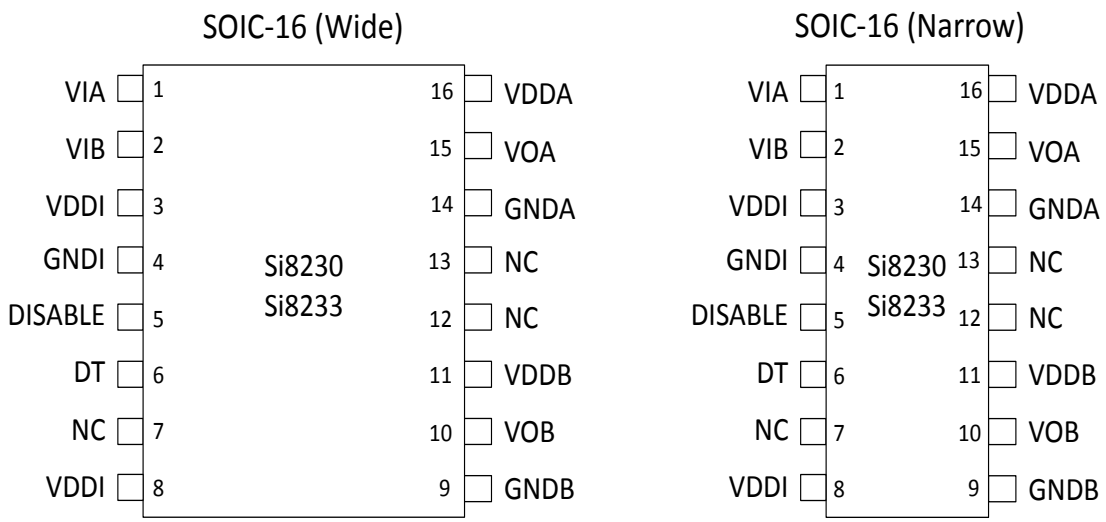

Table 5.1. Si8230/3 Two-Input HS/LS Isolated Driver (SOIC-16). WB SOIC-14 with IS3 package designation, has pins 12 & 13 missing

Pin	Name	Description
1	VIA	Non-inverting logic input terminal for Driver A.
2	VIB	Non-inverting logic input terminal for Driver B.
3	VDDI	Input-side power supply terminal; connect to a source of 4.5 to 5.5 V.
4	GNDI	Input-side ground terminal.
5	DISABLE	Device Disable. When high, this input unconditionally drives outputs VOA, VOB LOW. It is strongly recommended that this input be connected to external logic level to avoid erroneous operation due to capacitive noise coupling.
6	DT	Dead time programming input. The value of the resistor connected from DT to ground sets the dead time between output transitions of VOA and VOB. Defaults to 400 ps dead time when connected to VDDI or left open (see 2.10 Programmable Dead Time and Overlap Protection).
7	NC	No connection.
8	VDDI	Input-side power supply terminal; connect to a source of 4.5 to 5.5 V.
9	GNDB	Ground terminal for Driver B.
10	VOB	Driver B output (low-side driver).
11	VDDB	Driver B power supply voltage terminal; connect to a source of 6.5 to 24 V.
12	NC	No connection.
13	NC	No connection.
14	GNDA	Ground terminal for Driver A.
15	VOA	Driver A output (high-side driver).
16	VDDA	Driver A power supply voltage terminal; connect to a source of 6.5 to 24 V.

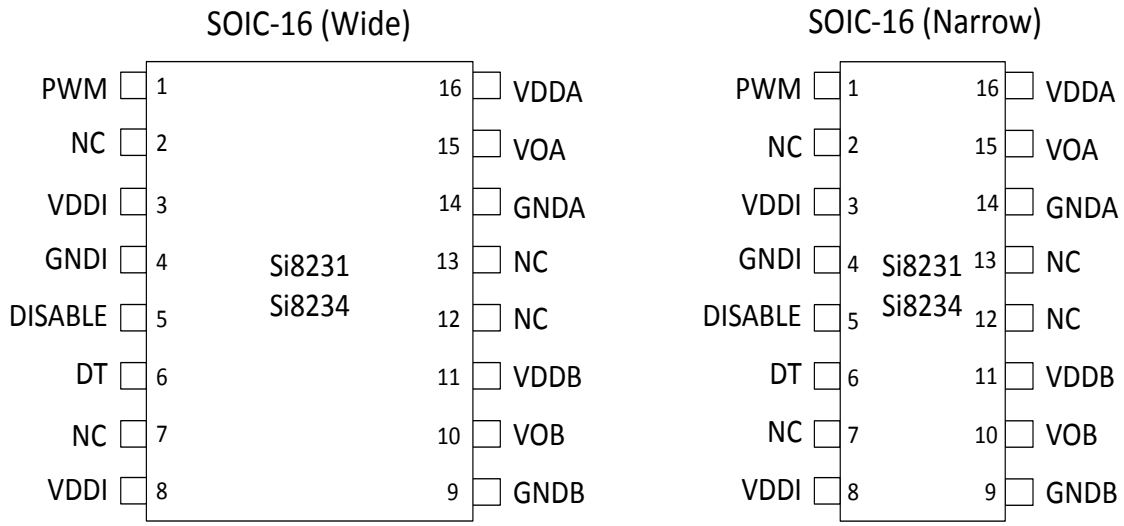

Table 5.2. Si8231/4 PWM Input HS/LS Isolated Driver (SOIC-16). WB SOIC-14 with IS3 package designation, has pins 12 & 13 missing

Pin	Name	Description
1	PWM	PWM input.
2	NC	No connection.
3	VDDI	Input-side power supply terminal; connect to a source of 4.5 to 5.5 V.
4	GNDI	Input-side ground terminal.
5	DISABLE	Device Disable. When high, this input unconditionally drives outputs VOA, VOB LOW. It is strongly recommended that this input be connected to external logic level to avoid erroneous operation due to capacitive noise coupling.
6	DT	Dead time programming input. The value of the resistor connected from DT to ground sets the dead time between output transitions of VOA and VOB. Defaults to 400 ps dead time when connected to VDDI or left open (see 2.10 Programmable Dead Time and Overlap Protection).
7	NC	No connection.
8	VDDI	Input-side power supply terminal; connect to a source of 4.5 to 5.5 V.
9	GNDB	Ground terminal for Driver B.
10	VOB	Driver B output (low-side driver).
11	VDDB	Driver B power supply voltage terminal; connect to a source of 6.5 to 24 V.
12	NC	No connection.
13	NC	No connection.
14	GNDA	Ground terminal for Driver A.
15	VOA	Driver A output (high-side driver).
16	VDDA	Driver A power supply voltage terminal; connect to a source of 6.5 to 24 V.

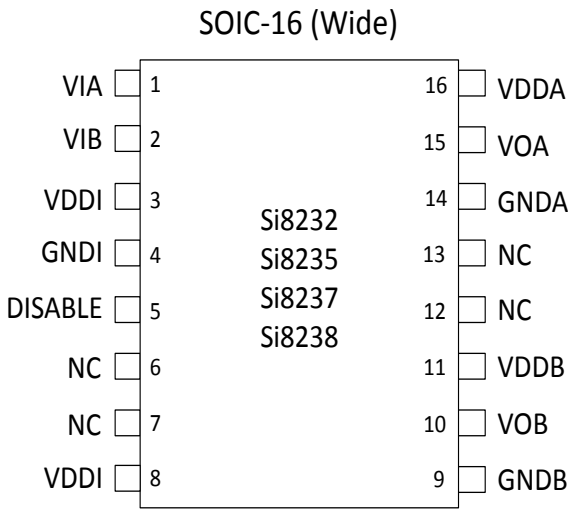

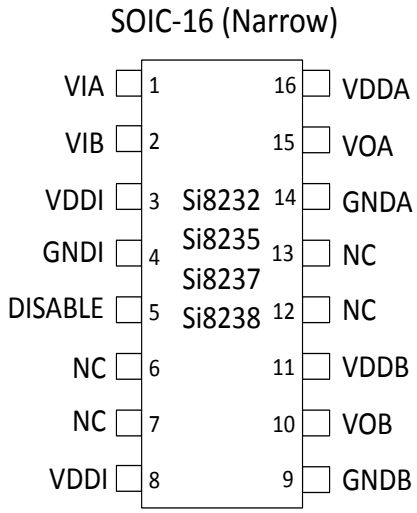

Table 5.3. Si8232/5/7/8 Dual Isolated Driver (SOIC-16). WB SOIC-14 with IS3 package designation, has pins 12 & 13 missing

Pin	Name	Description
1	VIA	Non-inverting logic input terminal for Driver A.
2	VIB	Non-inverting logic input terminal for Driver B.
3	VDDI	Input-side power supply terminal; connect to a source of 4.5 to 5.5 V, (2.7 to 5.5 V for Si8237/8).
4	GNDI	Input-side ground terminal.
5	DISABLE	Device Disable. When high, this input unconditionally drives outputs VOA, VOB LOW. It is strongly recommended that this input be connected to external logic level to avoid erroneous operation due to capacitive noise coupling.
6	NC	No connection.
7	NC	No connection.
8	VDDI	Input-side power supply terminal; connect to a source of 4.5 to 5.5 V, (2.7 to 5.5 V for Si8237/8).
9	GNDB	Ground terminal for Driver B.
10	VOB	Driver B output.
11	VDDB	Driver B power supply voltage terminal; connect to a source of 6.5 to 24 V.
12	NC	No connection.
13	NC	No connection.
14	GNDA	Ground terminal for Driver A.
15	VOA	Driver A output.
16	VDDA	Driver A power supply voltage terminal; connect to a source of 6.5 to 24 V.

LGA-14 and QFN-14 (5 x 5 mm)

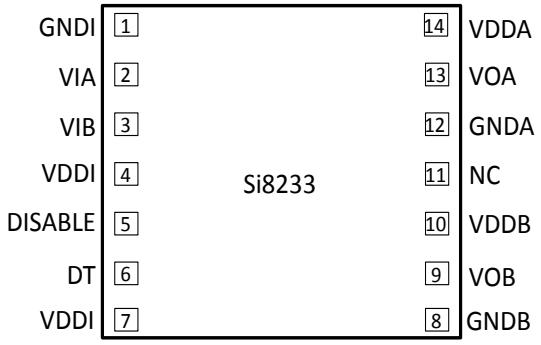

Table 5.4. Si8233 Two-Input HS/LS Isolated Driver (14 LD LGA and QFN)

Pin	Name	Description
GNDI	1	Input-side ground terminal.
VIA	2	Non-inverting logic input terminal for Driver A.
VIB	3	Non-inverting logic input terminal for Driver B.
VDDI	4	Input-side power supply terminal; connect to a source of 4.5 to 5.5 V.
DISABLE	5	Device Disable. When high, this input unconditionally drives outputs VOA, VOB LOW. It is strongly recommended that this input be connected to external logic level to avoid erroneous operation due to capacitive noise coupling.
DT	6	Dead time programming input. The value of the resistor connected from DT to ground sets the dead time between output transitions of VOA and VOB. Defaults to 400 ps dead time when connected to VDDI or left open (see2.10 Programmable Dead Time and Overlap Protection).
VDDI	7	Input-side power supply terminal; connect to a source of 4.5 to 5.5 V.
GNDB	8	Ground terminal for Driver B.
VOB	9	Driver B output (low-side driver).
VDDB	10	Driver B power supply voltage terminal; connect to a source of 6.5 to 24 V.
NC	11	No connection.
GNDA	12	Ground terminal for Driver A.
VOA	13	Driver A output (high-side driver).
VDDA	14	Driver A power supply voltage terminal; connect to a source of 6.5 to 24 V.

LGA-14 and QFN-14 (5 x 5 mm)

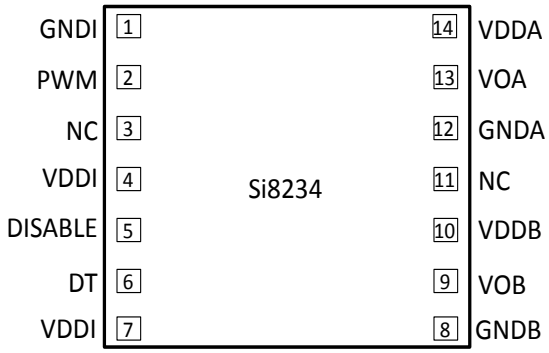

Table 5.5. Si8234 PWM Input HS/LS Isolated Driver (14 LD LGA and QFN)

Pin	Name	Description
GNDI	1	Input-side ground terminal.
PWM	2	PWM input.
NC	3	No connection.
VDDI	4	Input-side power supply terminal; connect to a source of 4.5 to 5.5 V.
DISABLE	5	Device Disable. When high, this input unconditionally drives outputs VOA, VOB LOW. It is strongly recommended that this input be connected to external logic level to avoid erroneous operation due to capacitive noise coupling.
DT	6	Dead time programming input. The value of the resistor connected from DT to ground sets the dead time between output transitions of VOA and VOB. Defaults to 400 ps dead time when connected to VDDI or left open (see 2.10 Programmable Dead Time and Overlap Protection).
VDDI	7	Input-side power supply terminal; connect to a source of 4.5 to 5.5 V.
GNDB	8	Ground terminal for Driver B.
VOB	9	Driver B output (low-side driver).
VDDB	10	Driver B power supply voltage terminal; connect to a source of 6.5 to 24 V.
NC	11	No connection.
GNDA	12	Ground terminal for Driver A.
VOA	13	Driver A output (high-side driver).
VDDA	14	Driver A power supply voltage terminal; connect to a source of 6.5 to 24 V.

LGA-14 and QFN-14 (5 x 5 mm)

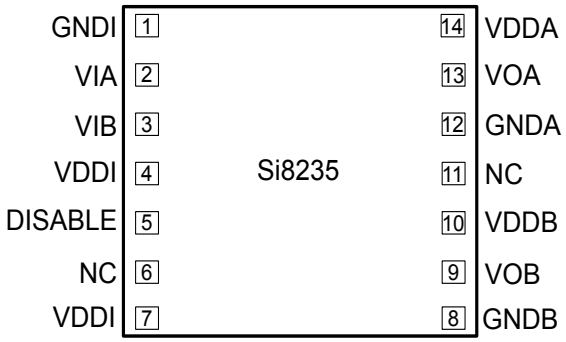

Table 5.6. Si8235 Dual Isolated Driver (14 LD LGA and QFN)

Pin	Name	Description
GNDI	1	Input-side ground terminal.
VIA	2	Non-inverting logic input terminal for Driver A.
VIB	3	Non-inverting logic input terminal for Driver B.
VDDI	4	Input-side power supply terminal; connect to a source of 4.5 to 5.5 V.
DISABLE	5	Device Disable. When high, this input unconditionally drives outputs VOA, VOB LOW. It is strongly recommended that this input be connected to external logic level to avoid erroneous operation due to capacitive noise coupling.
NC	6	No connection.
VDDI	7	Input-side power supply terminal; connect to a source of 4.5 to 5.5 V.
GNDB	8	Ground terminal for Driver B.
VOB	9	Driver B output (low-side driver).
VDDB	10	Driver B power supply voltage terminal; connect to a source of 6.5 to 24 V.
NC	11	No connection.
GNDA	12	Ground terminal for Driver A.
VOA	13	Driver A output (high-side driver).
VDDA	14	Driver A power supply voltage terminal; connect to a source of 6.5 to 24 V.

6. Package Outlines

6.1 Package Outline: 16-Pin Wide Body SOIC

Figure 6.1 16-Pin Wide Body SOIC on page 42 illustrates the package details for the Si823x in a 16-Pin Wide Body SOIC. Table 6.1 Package Diagram Dimensions on page 42 lists the values for the dimensions shown in the illustration.

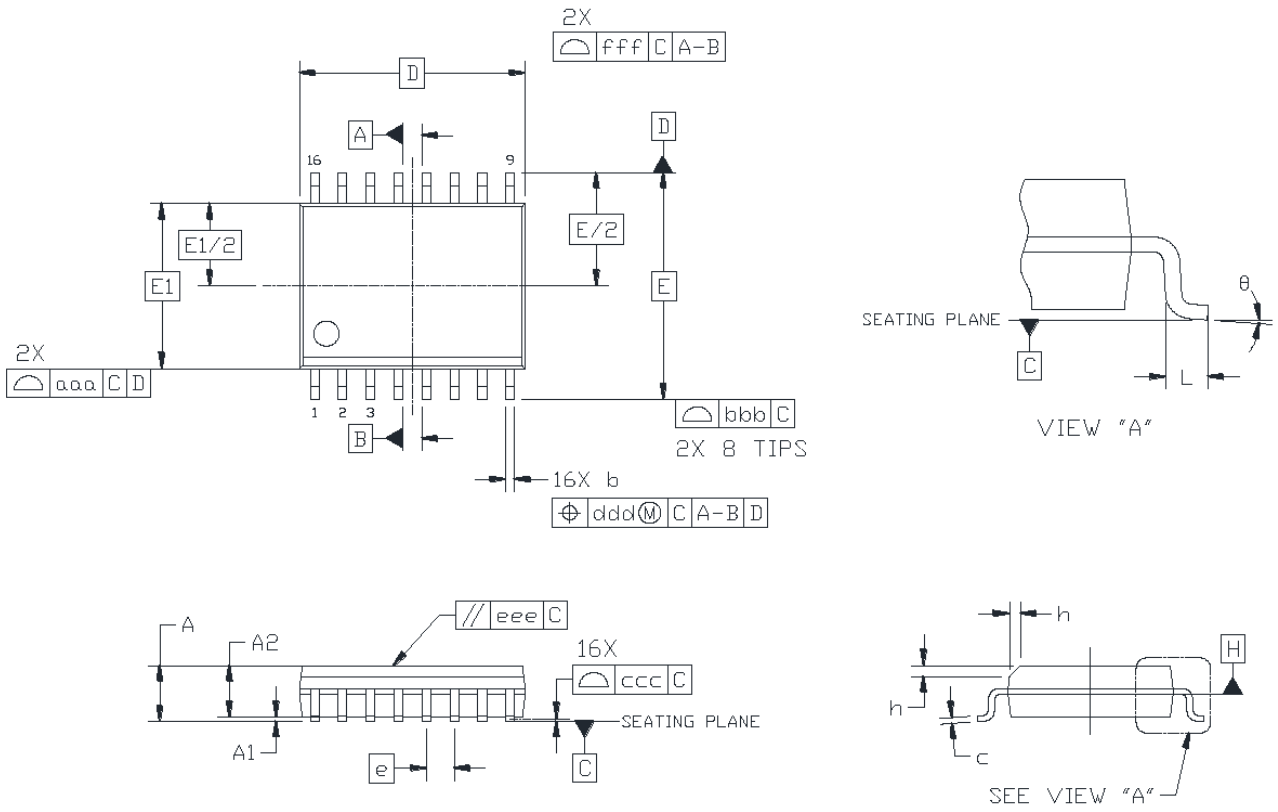

Figure 6.1. 16-Pin Wide Body SOIC

Table 6.1. Package Diagram Dimensions

Dimension	Min	Max
A	—	2.65
A1	0.10	0.30
A2	2.05	—
b	0.31	0.51
c	0.20	0.33
D	10.30 BSC	
E	10.30 BSC	
E1	7.50 BSC	
e	1.27 BSC	
L	0.40	1.27
h	0.25	0.75
θ	0°	8°

Dimension	Min	Max
ααα	—	0.10
bbb	—	0.33
ccc	—	0.10
ddd	—	0.25
eee	—	0.10
fff	—	0.20

Notes:

1. All dimensions shown are in millimeters (mm) unless otherwise noted.
2. Dimensioning and Tolerancing per ANSI Y14.5M-1994.
3. This drawing conforms to JEDEC Outline MS-013, Variation AA.
4. Recommended reflow profile per JEDEC J-STD-020 specification for small body, lead-free components.

6.2 Package Outline: 14-Pin Wide Body SOIC

Figure 6.2 Si823x 14-pin WB SOIC Outline on page 44 illustrates the package details for the Si823x in a 14-Pin Wide Body SOIC. Table 6.2 Package Diagram Dimensions on page 44 lists the values for the dimensions shown in the illustration.

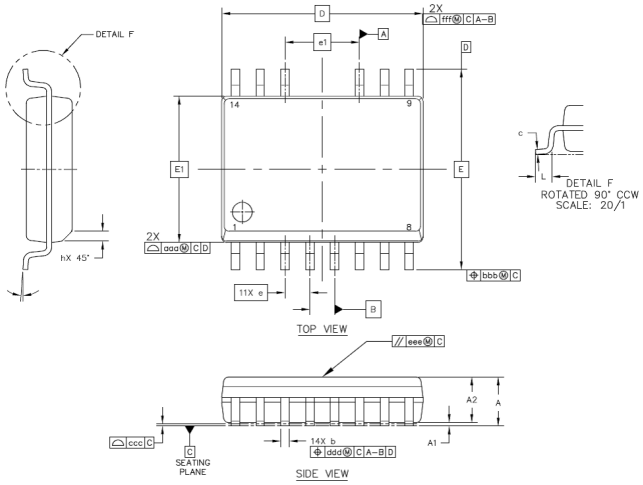

Figure 6.2. Si823x 14-pin WB SOIC Outline

Table 6.2. Package Diagram Dimensions

Dimension	MIN	MAX
A	—	2.65
A1	0.10	0.30
A2	2.05	—
b	0.31	0.51
c	0.20	0.33
D	10.30 BSC	
E	10.30 BSC	
E1	7.50 BSC	
e	1.27 BSC	
L	0.40	1.27
h	0.25	0.75
Θ	0°	8°
aaa	—	0.10
bbb	—	0.33
ccc	—	0.10
ddd	—	0.25
eee	—	0.10
fff	—	0.20

Dimension	MIN	MAX

Notes:

1. All dimensions shown are in millimeters (mm) unless otherwise noted.
2. Dimensioning and Tolerancing per ANSI Y14.5M-1994.
3. This drawing conforms to JEDEC Outline MS-013, Variation AA.
4. Recommended reflow profile per JEDEC J-STD-020 specification for small body, lead-free components.

6.3 Package Outline: 16-Pin Narrow Body SOIC

Figure 6.3 16-pin Small Outline Integrated Circuit (SOIC) Package on page 46 illustrates the package details for the Si823x in a 16-pin narrow-body SOIC. Table 6.3 Package Diagram Dimensions on page 46 lists the values for the dimensions shown in the illustration.

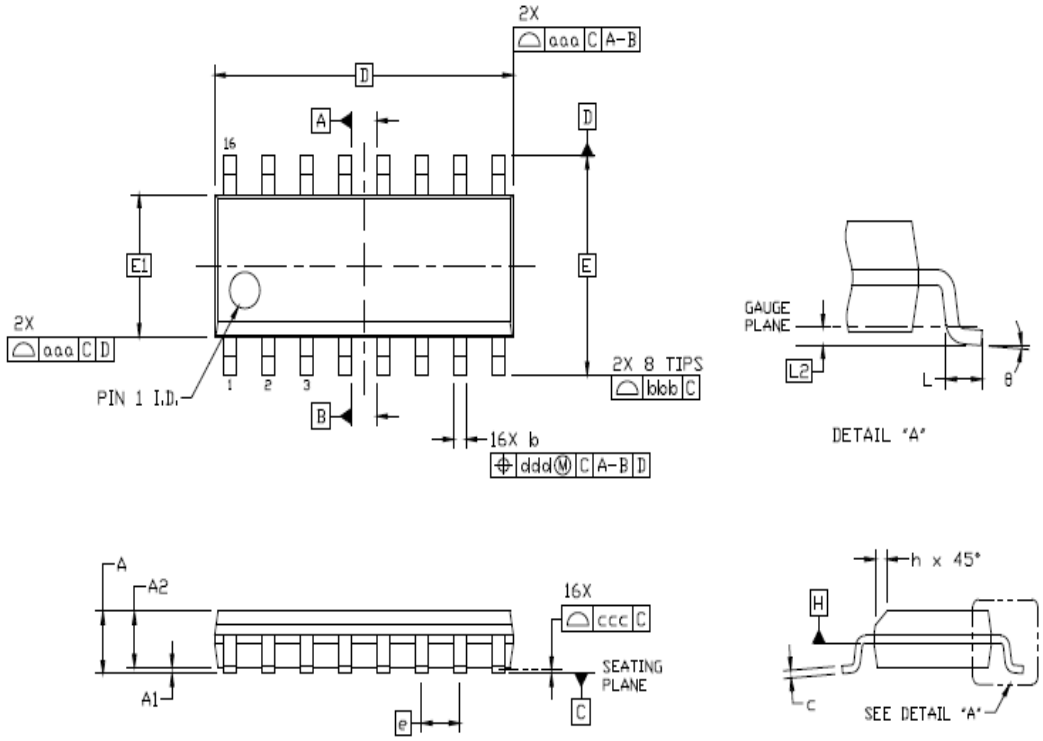

Figure 6.3. 16-pin Small Outline Integrated Circuit (SOIC) Package

Table 6.3. Package Diagram Dimensions

Dimension	Min	Max		Dimension	Min	Max
A	—	1.75		L	0.40	1.27
A1	0.10	0.25		L2	0.25 BSC	
A2	1.25	—		h	0.25	0.50
b	0.31	0.51		θ	0°	8°
c	0.17	0.25		aaa	0.10	
D	9.90 BSC			bbb	0.20	
E	6.00 BSC			ccc	0.10	
E1	3.90 BSC			ddd	0.25	
e	1.27 BSC					

Notes:

1. All dimensions shown are in millimeters (mm) unless otherwise noted.
2. Dimensioning and Tolerancing per ANSI Y14.5M-1994.
3. This drawing conforms to the JEDEC Solid State Outline MS-012, Variation AC.
4. Recommended card reflow profile is per the JEDEC/IPC J-STD-020 specification for Small Body Components.

6.4 Package Outline: 14 LD LGA (5 x 5 mm)

Figure 6.4 Si823x LGA Outline on page 47 illustrates the package details for the Si823x in an LGA outline. Table 6.4 Package Diagram Dimensions on page 47 lists the values for the dimensions shown in the illustration.

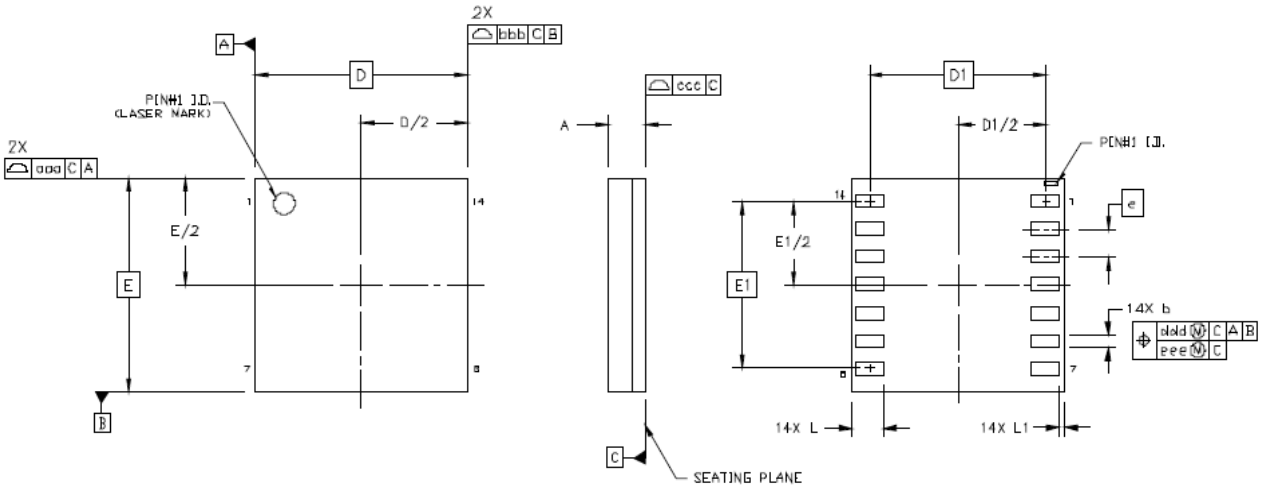

Figure 6.4. Si823x LGA Outline

Table 6.4. Package Diagram Dimensions

Dimension	MIN	NOM	MAX
A	0.74	0.84	0.94
b	0.25	0.30	0.35
D		5.00 BSC	
D1		4.15 BSC	
e		0.65 BSC	
E		5.00 BSC	
E1		3.90 BSC	
L	0.70	0.75	0.80
L1	0.05	0.10	0.15
aaa	—	—	0.10
bbb	—	—	0.10
ccc	—	—	0.08
ddd	—	—	0.15
eee	—	—	0.08

Notes:

1. All dimensions shown are in millimeters (mm) unless otherwise noted.
2. Dimensioning and Tolerancing per ANSI Y14.5M-1994.

6.5 Package Outline: 14 LD QFN

Figure 6.5 Si823x 14-pin LD QFN Outline on page 48 illustrates the package details for the Si823x in an QFN outline. Table 6.5 Package Diagram Dimensions on page 48 lists the values for the dimensions shown in the illustration.

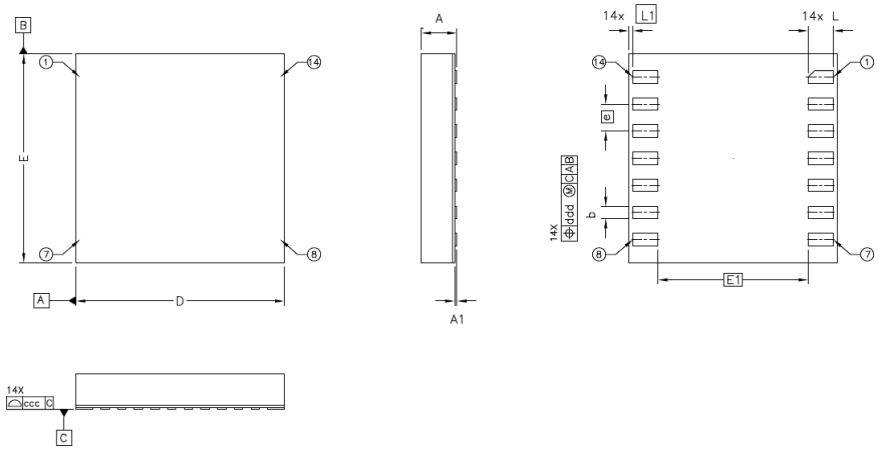

Figure 6.5. Si823x 14-pin LD QFN Outline

Table 6.5. Package Diagram Dimensions

Dimension	MIN	NOM	MAX
A	0.74	0.85	0.90
A1	0	0.025	0.05
b	0.25	0.30	0.35
D		5.00 BSC	
e		0.65 BSC	
E		5.00 BSC	
E1		3.60 BSC	
L	0.50	0.60	0.70
L1[3]	—	0.10 BSC	—
ccc	—	—	0.08
ddd	—	—	0.10

Notes:

1. All dimensions shown are in millimeters (mm) unless otherwise noted.
2. Dimensioning and Tolerancing per ANSI Y14.5M-1994.
3. L1 shall not be less than 0.01 mm.

7. Land Patterns

7.1 Land Pattern: 16-Pin Wide Body SOIC

Figure 7.1 16-Pin SOIC Land Pattern on page 49 illustrates the recommended land pattern details for the Si823x in a 16-pin wide-body SOIC. Table 7.1 16-Pin Wide Body SOIC Land Pattern Dimensions on page 49 lists the values for the dimensions shown in the illustration.

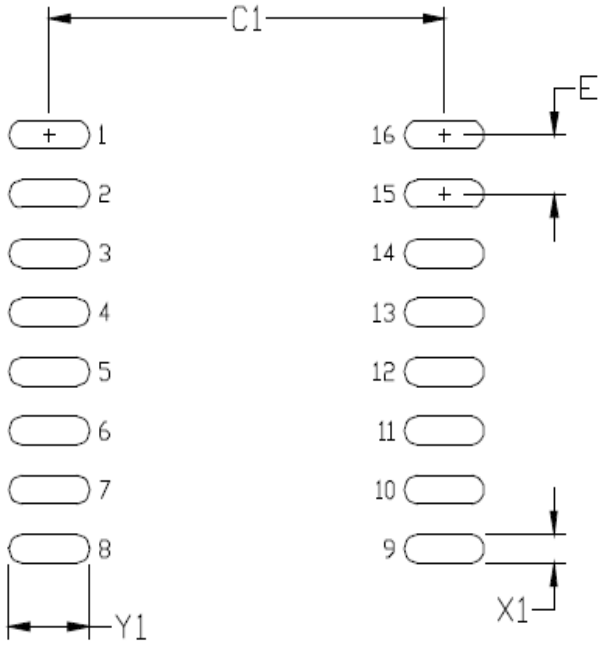

Figure 7.1. 16-Pin SOIC Land Pattern

Table 7.1. 16-Pin Wide Body SOIC Land Pattern Dimensions

Dimension	Feature	(mm)
C1	Pad Column Spacing	9.40
E	Pad Row Pitch	1.27
X1	Pad Width	0.60
Y1	Pad Length	1.90

Notes:

1. This Land Pattern Design is based on IPC-7351 pattern SOIC127P1032X265-16AN for Density Level B (Median Land Protrusion).
2. All feature sizes shown are at Maximum Material Condition (MMC) and a card fabrication tolerance of 0.05 mm is assumed.

7.2 Land Pattern: 14-Pin Wide Body SOIC

Figure 7.2 14-Pin WB SOIC Land Pattern on page 50 illustrates the recommended land pattern details for the Si823x in a 14-pin Wide Body SOIC. Table 7.2 14-Pin WB SOIC Land Pattern Dimensions on page 50 lists the values for the dimensions shown in the illustration.

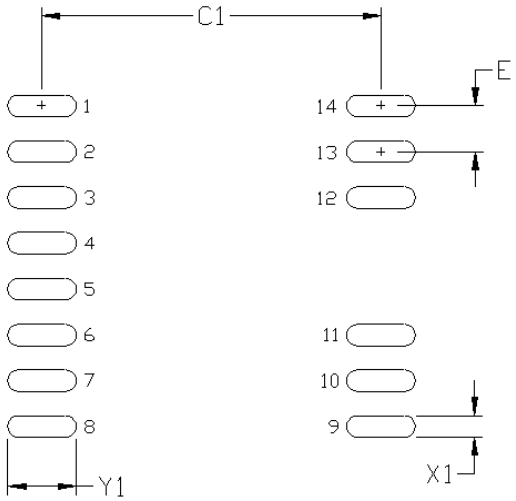

Figure 7.2. 14-Pin WB SOIC Land Pattern

Table 7.2. 14-Pin WB SOIC Land Pattern Dimensions

Dimension	Feature	(mm)
C1	Pad Column Spacing	4.20
E	Pad Row Pitch	1.50
X1	Pad Width	4.25
Y1	Pad Length	0.65

Notes:

1. This Land Pattern Design is based on IPC-7351 pattern SOIC127P1032X265-16AN for Density Level B (Median Land Protrusion).
2. All feature sizes shown are at Maximum Material Condition (MMC) and a card fabrication tolerance of 0.05 mm is assumed.

7.3 Land Pattern: 16-Pin Narrow Body SOIC

Figure 7.3 16-Pin Narrow Body SOIC PCB Land Pattern on page 51 illustrates the recommended land pattern details for the Si823x in a 16-pin narrow-body SOIC. Table 7.3 16-Pin Narrow Body SOIC Land Pattern Dimensions on page 51 lists the values for the dimensions shown in the illustration.

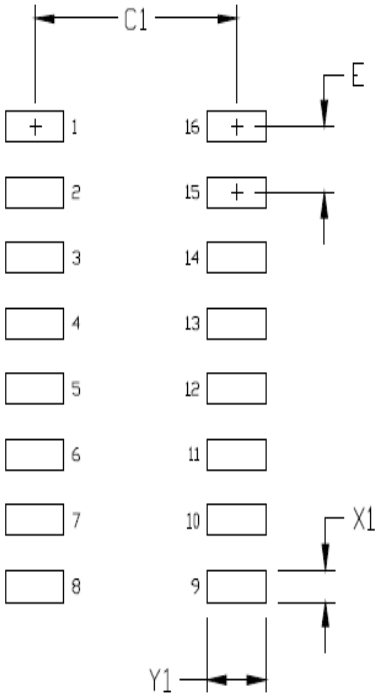

Figure 7.3. 16-Pin Narrow Body SOIC PCB Land Pattern

Table 7.3. 16-Pin Narrow Body SOIC Land Pattern Dimensions

Dimension	Feature	(mm)
C1	Pad Column Spacing	5.40
E	Pad Row Pitch	1.27
X1	Pad Width	0.60
Y1	Pad Length	1.55

Notes:

1. This Land Pattern Design is based on IPC-7351 pattern SOIC127P600X165-16N for Density Level B (Median Land Protrusion).
2. All feature sizes shown are at Maximum Material Condition (MMC) and a card fabrication tolerance of 0.05 mm is assumed.

7.4 Land Pattern: 14 LD LGA/QFN

Figure 7.4 14-Pin LGA/QFN Land Pattern on page 52 illustrates the recommended land pattern details for the Si823x in a 14-pin LGA/QFN. Table 7.4 14-Pin LGA/QFN Land Pattern Dimensions on page 52 lists the values for the dimensions shown in the illustration.

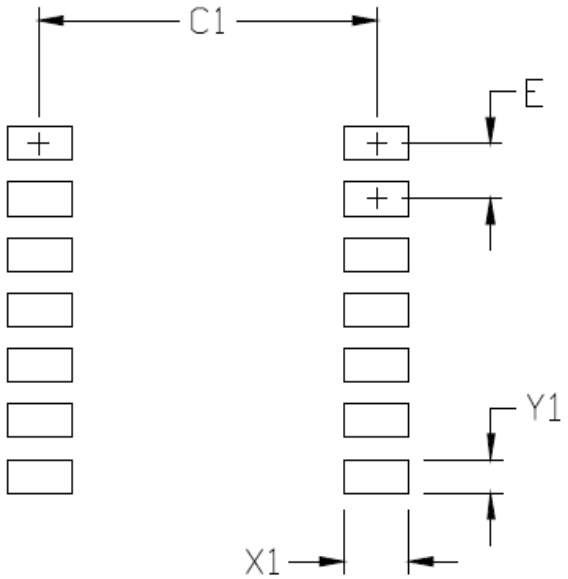

Figure 7.4. 14-Pin LGA/QFN Land Pattern

Table 7.4. 14-Pin LGA/QFN Land Pattern Dimensions

Dimension	(mm)
C1	4.20
E	0.65
X1	0.80
Y1	0.40

Notes:

General

1. All dimensions shown are in millimeters (mm).
2. This Land Pattern Design is based on the IPC-7351 guidelines.
3. All dimensions shown are at Maximum Material Condition (MMC). Least Material Condition (LMC) is calculated based on a Fabrication Allowance of 0.05 mm.

Solder Mask Design

1. All metal pads are to be non-solder mask defined (NSMD). Clearance between the solder mask and the metal pad is to be 60 µm minimum, all the way around the pad.

Stencil Design

1. A stainless steel, laser-cut and electro-polished stencil with trapezoidal walls should be used to assure good solder paste release.
2. The stencil thickness should be 0.125 mm (5 mils).
3. The ratio of stencil aperture to land pad size should be 1:1.

Card Assembly

1. A No-Clean, Type-3 solder paste is recommended.
2. The recommended card reflow profile is per the JEDEC/IPC J-STD-020 specification for Small Body Components.

8. Top Markings

8.1 Si823x Top Marking (14/16-Pin Wide Body SOIC)

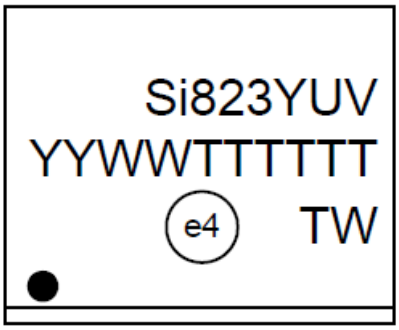

Table 8.1. Top Marking Explanation (14/16-Pin Wide Body SOIC)

Line 1 Marking:	Base Part Number Ordering Options See Ordering Guide for more information.	Si823 = ISOdriver product series Y = Peak output current 0, 1, 2, 7 = 0.5 A 3, 4, 5, 8 = 4.0 A U = UVLO level A = 5 V; B = 8 V; C = 10 V; D = 12.5 V V = Isolation rating B = 2.5 kV; C = 3.75 kV; D = 5.0 kV
Line 2 Marking:	YY = Year WW = Workweek	Assigned by the Assembly House. Corresponds to the year and workweek of the mold date.
	TTTTTT = Mfg Code	Manufacturing Code from Assembly Purchase Order form.
Line 3 Marking:	Circle = 1.5 mm Diameter (Center Justified)	“e4” Pb-Free Symbol
	Country of Origin ISO Code Abbreviation	TW = Taiwan (as shown), TH = Thailand

8.2 Si823x Top Marking (16-Pin Narrow Body SOIC)

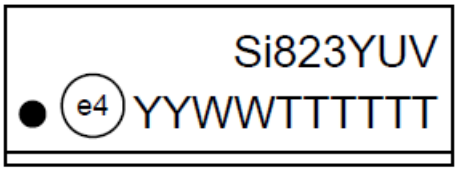

Line 1 Marking:	Base Part Number Ordering Options See Ordering Guide for more information.	Si823 = ISOdriver product series Y = Peak output current 0, 1, 2, 7 = 0.5 A 3, 4, 5, 8 = 4.0 A U = UVLO level A = 5 V; B = 8 V; C = 10 V; D = 12.5 V V = Isolation rating A = 1.0 kV; B = 2.5 kV; C = 3.75 kV
Line 2 Marking:	YY = Year WW = Workweek	Assigned by the Assembly House. Corresponds to the year and workweek of the mold date.
	TTTTTT = Mfg Code	Manufacturing Code from Assembly Purchase Order form.

8.3 Si823x Top Marking (14 LD LGA/QFN)

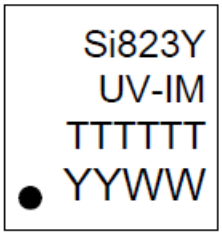

Line 1 Marking:	Base Part Number Ordering Options See Ordering Guide for more information.	Si823 = ISOdriver product series Y = Peak output current 0, 1, 2 = 0.5 A 3, 4, 5 = 4.0 A
Line 2 Marking:	Ordering options	U = UVLO level A = 5 V; B = 8 V; C = 10 V; D = 12.5 V V = Isolation rating A = 1.0 kV; B = 2.5 kV; C = 3.75 kV I = –40 to +125 °C ambient temperature range M = LGA package type M1 = QFN package type
Line 3 Marking:	TTTTTT	Manufacturing Code from Assembly
Line 4 Marking:	Circle = 1.5 mm diameter	Pin 1 identifier
	YYWW	Manufacturing date code

9. Revision History

Revision 2.1.1

January 2018

- Added new table to Ordering Guide for Automotive-Grade OPN options.

Revision 2.1

October 2017

- Added IS3 and IM1 packaging options
- Added IEC 62368-1 references throughout
- Changed max propagation delay spec from 60 ns to 45 ns based on new test limits
- Removed references to IEC 61010
- Removed references to IEC 60747, replaced with references to VDE 0884-10

Revision 2.0

August 7, 2017

Revision 1.9

July 7, 2017

- Updated 1. Ordering Guide to designate tape and reel packaging option.

Revision 1.8

May 17, 2016

- Converted document from Framemaker to DITA.

Revision 1.7

- Updated 3.1 Test Circuits
  - Added CQC certificate numbers.
- Updated Table 3.3 Insulation and Safety-Related Specifications on page 30
  - Updated Erosion Depth.
- Updated Table 3.5 VDE 0884-10 Insulation Characteristics[1] on page 31
  - Updated V_{PR} for WBSOIC-16.
- Updated Table 3.8 Absolute Maximum Ratings[1] on page 33
  - Removed Io and added Peak Output Current specifications.
- Updated Equation 1.
- Updated Figure 4.1 Si823x in Half-Bridge Application on page 34.
- Updated Figure 4.2 Si8232/5/7/8 in a Dual Driver Application on page 35.
- Updated Ordering Guide Table 1.1 Si823x Ordering Guide [1, 2, 3] on page 2

Revision 1.6

- Updated Table 1.1 Si823x Ordering Guide [1, 2, 3] on page 2, Ordering Part Numbers.
- Added Revision D Ordering Part Numbers.
- Removed all Ordering Part Numbers of previous revisions.

Revision 1.5

- Updated Table 3.1 Electrical Characteristics[1] on page 25, input and output supply current.
- Added references to AEC-Q100 qualified throughout.
- Changed all 60747-5-2 references to 60747-5-5.
- Added references to CQC throughout.
- Updated pin descriptions throughout.
  - Corrected dead time default to 400 ps from 1 ns.
- Updated Table 1.1 Si823x Ordering Guide [1, 2, 3] on page 2, Ordering Part Numbers.
  - Removed moisture sensitivity level table notes.

Revision 1.4

- Updated 1. Ordering Guide.
  - Updated "3 V VDDI Ordering Options".

Revision 1.3

- Added Si8237/8 throughout.
- Updated Table 3.1 Electrical Characteristics[1] on page 25.
- Updated Figure 3.1 IOL Sink Current Test Circuit on page 28.
- UpdatedFigure 3.2 IOH Source Current Test Circuit on page 28.
- Added Figure 3.3 Common Mode Transient Immunity Test Circuit on page 29.
- Updated Si823x Family Truth Table to include notes 1 and 2.
- Updated 2.10 Programmable Dead Time and Overlap Protection.
- Removed references to Figures 26A and 26B.
- Updated Table 1.1 Si823x Ordering Guide [1, 2, 3] on page 2.
- Added Si8235-BA-C-IS1 ordering part number.
- Added table note.

Revision 1.2

- Updated 1. Ordering Guide.
  - Updated moisture sensitivity level (MSL) for all package types.
- Updated Table 3.8 Absolute Maximum Ratings[1] on page 33.
  - Added junction temperature spec.
- Updated 3.1 Test Circuits with new notes.
- Updated Figures Figure 2.16 Output Sink Current vs. Supply Voltage on page 13, Figure 2.14 Output Source Current vs. Supply Voltage on page 12, Figure 2.17 Output Sink Current vs. Temperature on page 13, and Figure 2.15 Output Source Current vs. Temperature on page 12 to reflect correct y-axis scaling.
- Updated Figure 4.2 Si8232/5/7/8 in a Dual Driver Application on page 35.
- Updated .
- Updated 6.1 Package Outline: 16-Pin Wide Body SOIC.
- Updated Table 6.1 Package Diagram Dimensions on page 42.
- Change references to 1.5 kV_{RMS} rated devices to 1.0 kV_{RMS} throughout.
- Updated 2.7 Power Dissipation Considerations.

Revision 1.1

- Updated .
  - Updated CMTI specification.
- Updated Table 3.1 Electrical Characteristics[1] on page 25.
  - Updated CMTI specification.
- Updated Table 3.5 VDE 0884-10 Insulation Characteristics[1] on page 31.
- Updated 4.2 Dual Driver.
- Updated 1. Ordering Guide.
- Replaced pin descriptions on page 1 with chip graphics.

Revision 1.0

- Updated Tables 3.1 Test Circuits, Table 3.3 Insulation and Safety-Related Specifications on page 30, Table 3.4 IEC 60664-1 Ratings on page 31, and Table 3.5 VDE 0884-10 Insulation Characteristics[1] on page 31.
- Updated 1. Ordering Guide.
  - Added 5 V UVLO ordering options
- Added Device Marking sections.

Revision 0.3

- Moved Sections 2, 3, and 4 to after Section 5.
- Updated Tables Table 5.4 Si8233 Two-Input HS/LS Isolated Driver (14 LD LGA and QFN) on page 39, Table 5.5 Si8234 PWM Input HS/LS Isolated Driver (14 LD LGA and QFN) on page 40.
  - Removed Si8230, Si8231, and Si8232 from pinout and from title.
- Updated and added Ordering Guide footnotes.
- Updated UVLO specifications in Table 3.1 Electrical Characteristics[1] on page 25.
- Added PWD and Output Supply Active Current specifications in Table 3.1 Electrical Characteristics[1] on page 25.
- Updated and added typical operating condition graphs in 2.3 Typical Operating Characteristics (0.5 Amp) and 2.4 Typical Operating Characteristics (4.0 Amp).

Revision 0.2

- Updated all specs to reflect latest silicon revision.
- Updated Table 3.1 Electrical Characteristics[1] on page 25 to include new UVLO options.
- Updated Table 3.8 Absolute Maximum Ratings[1] on page 33 to reflect new maximum package isolation ratings
- Added Figures 34, 35, and 36.
- Updated Ordering Guide to reflect new package offerings.
- Added "Undervoltage Lockout (UVLO)" section to describe UVLO operation.

Revision 0.11

- Initial release.

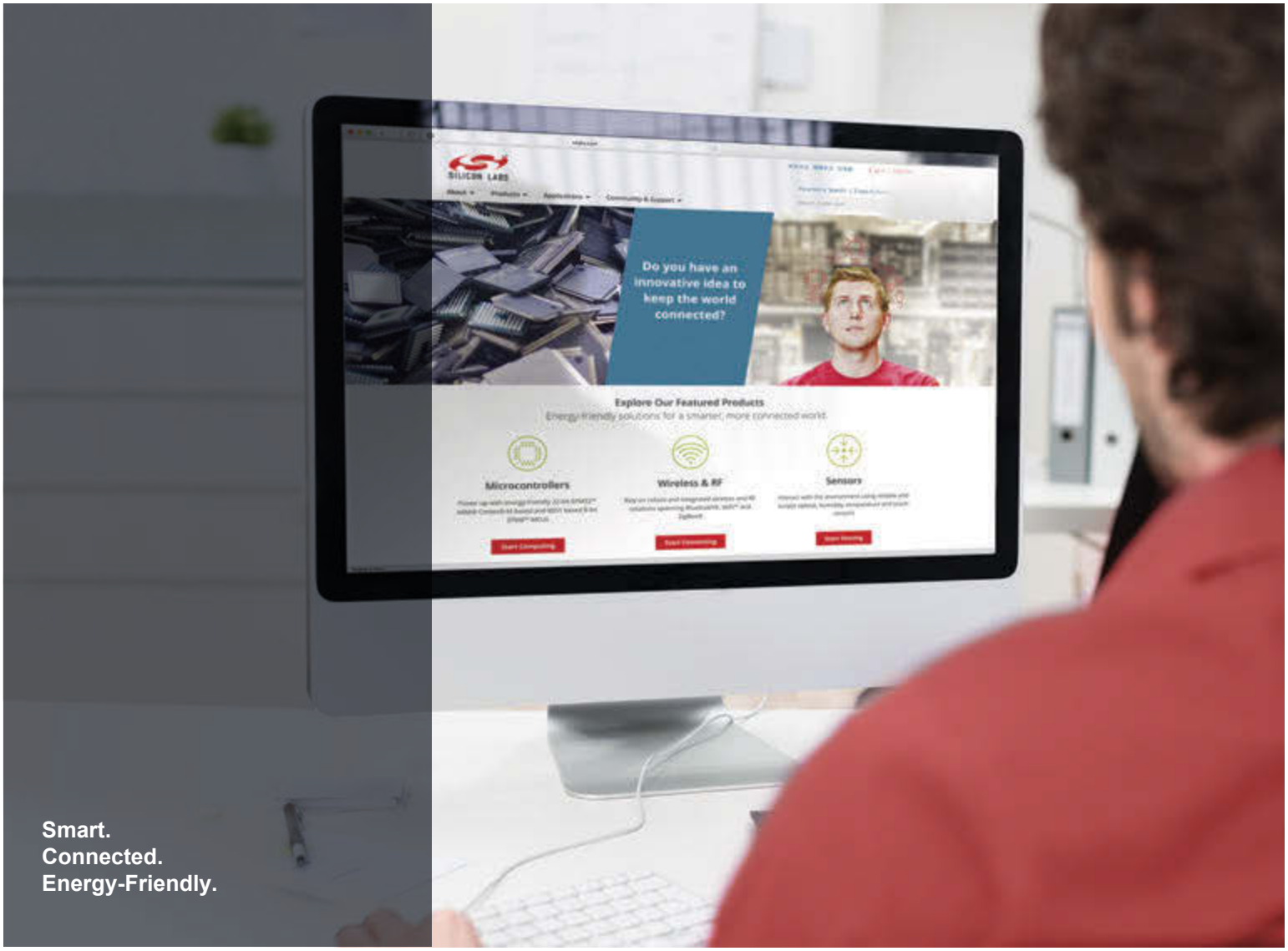

Products
www.silabs.com/products

Quality
www.silabs.com/quality

Support and Community
community.silabs.com

Disclaimer
Silicon Labs intends to provide customers with the latest, accurate, and in-depth documentation of all peripherals and modules available for system and software implementers using or intending to use the Silicon Labs products. Characterization data, available modules and peripherals, memory sizes and memory addresses refer to each specific device, and "Typical" parameters provided can and do vary in different applications. Application examples described herein are for illustrative purposes only. Silicon Labs reserves the right to make changes without further notice and limitation to product information, specifications, and descriptions herein, and does not give warranties as to the accuracy or completeness of the included information. Silicon Labs shall have no liability for the consequences of use of the information supplied herein. This document does not imply or express copyright licenses granted hereunder to design or fabricate any integrated circuits. The products are not designed or authorized to be used within any Life Support System without the specific written consent of Silicon Labs. A "Life Support System" is any product or system intended to support or sustain life and/or health, which, if it fails, can be reasonably expected to result in significant personal injury or death. Silicon Labs products are not designed or authorized for military applications. Silicon Labs products shall under no circumstances be used in weapons of mass destruction including (but not limited to) nuclear, biological or chemical weapons, or missiles capable of delivering such weapons.

Trademark Information
Silicon Laboratories Inc.® , Silicon Laboratories®, Silicon Labs®, SiLabs® and the Silicon Labs logo®, Bluegiga®, Bluegiga Logo®, Clockbuilder®, CMEMS®, DSPLL®, EFM®, EFM32®, EFR, Ember®, Energy Micro, Energy Micro logo and combinations thereof, "the world's most energy friendly microcontrollers", Ember®, EZLink®, EZRadio®, EZRadioPRO®, Gecko®, ISOmodem®, Micrium, Precision32®, ProSLIC®, Simplicity Studio®, SiPHY®, Telegesis, the Telegesis Logo®, USBXpress®, Zentri and others are trademarks or registered trademarks of Silicon Labs. ARM, CORTEX, Cortex-M3 and THUMB are trademarks or registered trademarks of ARM Holdings. Keil is a registered trademark of ARM Limited. All other products or brand names mentioned herein are trademarks of their respective holders.

SILICON LABS

Silicon Laboratories Inc.
400 West Cesar Chavez
Austin, TX 78701
USA

http://www.silabs.com