ALS60/61 Series, +85°C

Electronic Components KEMET CHARGED.

Overview

KEMET's ALS60/61 Series of screw terminal capacitors is designed for high voltage, high ripple current applications. They are ideally suited for industrial and commercial applications demanding high reliability and long-life expectancy such as frequency converters, uninterruptible power supply (UPS) systems and switch mode power supplies (SMPS).

Applications

Typical applications for KEMET's ALS60/61 Series of capacitors include smoothing, energy storage, demanding power supplies, AC motor control, traction and welding.

Benefits

- Long life, up to 20,000 hours at +85°C (V_R, I_R applied)
- High ripple current
- Excellent surge voltage capability
- Optimized designs available upon request

Click image above for interactive 3D content

Open PDF in Adobe Reader for full functionality

Part Number System

ALS6	0	A	561	KE	550
Series	Stud Option	Termination	Capacitance Code (µF)	Size Code	Rated Voltage (VDC)
Screw Terminal Aluminum Electrolytic	0 = Plain Can 1 = Threaded mounting stud	See Termination Table	First two digits represent significant figures. Third digit specifies number of zeros.	See Dimension Table	550 = 550

© KEMET Electronics Corporation • P.O. Box 5928 • Greenville, SC 29606 • 864-963-6300 • www.kemet.com

sales@prom-elec.com / ООО ПРОМЭЛЕКТРОНИКА

Performance Characteristics

Item	Performance Characteristics		
Capacitance Range	560 – 3,300 µF		
Rated Voltage	550 VDC		
Operating Temperature	−40 to +85°C		
Storage Temperature Range	−55 to +85°C		
Capacitance Tolerance	±20% at 100 Hz/+20°C		
Operational Lifetime	D (mm)	Rated Voltage and Ripple Current at +85°C (hours)	Rated Voltage at +85°C (hours)
	51	18,000	36,000
	66	19,000	38,000
	77, 90	20,000	40,000
End of Life Requirement	Δ C/C < ±15%, ESR < 3 x initial ESR limit, IL < initial specified limit		
Shelf Life	2,000 hours at +85°C or 30,000 hours at +40°C 0 VDC		
Leakage Current	I = 0.003 CV or 6,000 (µA, whichever is smaller)		
	C = rated capacitance (µF), V = rated voltage (VDC). Voltage applied for 5 minutes at +20°C.		
Vibration Test Specifications		Procedure	Requirements
	Case Length < 220 mm	0.75 mm displacement amplitude or 10 g maximum acceleration. Vibration applied for three 2-hour sessions at 10 – 55 Hz (capacitor clamped by body).	No leakage of electrolyte or other visible damage. Deviations in capacitance from initial measurements must not exceed: Δ C/C < 5%
Standards	IEC 60384–4 long life grade 40/85/56		

Surge Voltage

Condition	Voltage (VDC)
	550
≤ 30 s surge followed by a no load period of 330 s, 1,000 cycles at 85°C	605

Test Method & Performance

Endurance Life Test		
Conditions	Performance	
Temperature	+85°C	
Test Duration	2,000 hours	
Ripple Current	Rated ripple current in specified table	
Voltage	The sum of DC voltage and the peak AC voltage must not exceed the rated voltage of the capacitor	
Performance	**The following specifications will be satisfied when the capacitor is tested at +20°C:**	
Capacitance Change	> 160 V	Within 10% of the initial value
Equivalent Series Resistance	Does not exceed 1.5 x initial limit	
Leakage Current	Does not exceed leakage current limit	

Dimensions – Millimeters

Size Code	Dimensions in mm						Approximate Weight Grams
	D	L	LT	S	V	Mounting Stud (M x H)	
	±1	±2	±1	±0.5	Nominal	±1	
KE	51	82	86.5	22.2	13.7	M12 x 16	220
KF	51	105	110.5	22.2	13.7	M12 x 16	300
KJ	51	115	119	22.2	13.7	M12 x 16	340
KM	51	131	136	22.2	13.7	M12 x 16	385
ME	66	82	86	28.5	15.8	M12 x 16	428
MF	66	105	110.5	28.5	15.8	M12 x 16	505
MJ	66	115	119	28.5	15.8	M12 x 16	540
MM	66	131	135	28.5	15.8	M12 x 16	610
MP	66	146	150	28.5	15.8	M12 x 16	675
NF	77	105	110.5	31.8	19	M12 x 16	690
NJ	77	115	119	31.8	19	M12 x 16	765
NM	77	131	135	31.8	19	M12 x 16	860
NP	77	146	150.5	31.8	19	M12 x 16	960
QH	90	98	103.5	31.8	25	M12 x 16	900

Note: Dimensions include sleeving. LT listed is for A-type termination code.
Information for other termination codes is available upon request.

Termination Tables

Termination Code Diameter (mm)	A	C
51	•	
66	•	•
77	•	•
90	•	•

Termination Code	Thread	Termination Style	T ±0.5	DT ±0.5	Thread Depth (TD) Minimum	Z Nominal
Standard Termination Option						
A	M5	Oval	5.5	13	10	10
C	M6	Round	5.5	13	10	
Dimensions in mm						

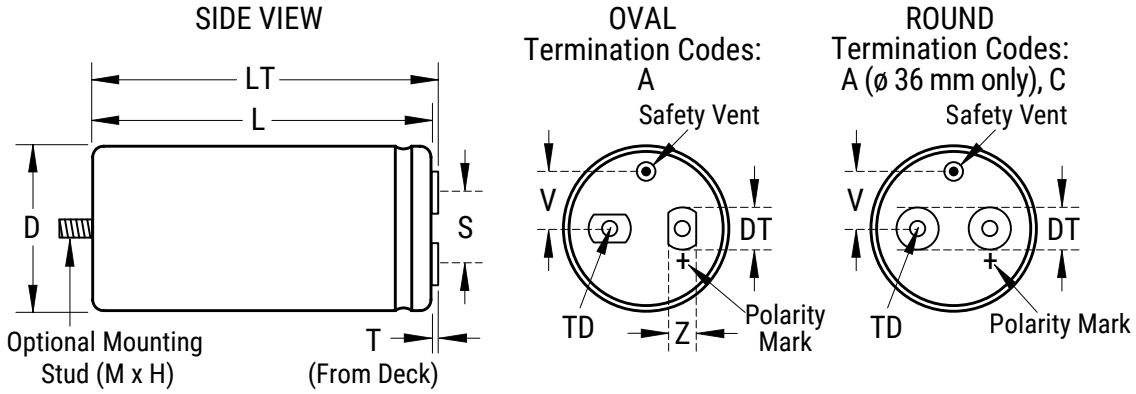

Case Polarity

Due to the presence of electrolyte in the capacitor, the aluminum can and stud mounting will essentially be at the same polarity as the negative terminal. We recommend that the stud and can be insulated (see accessories for insulating nuts).

Terminations

Aluminum inserts with M5 threads as standard, maximum torque 2NM. Optional M6 threaded inserts have a maximum torque 4NM. Maximum torque for stud mounting M8:4NM and M12:8NM.

Shelf Life

The capacitance, ESR and impedance of a capacitor will not change significantly after extended storage periods, however the leakage current will very slowly increase. KEMET products are particularly stable and allow a shelf life in excess of three years at 40°C. See sectional specification under each product series for specific data.

Re-age (Reforming) Procedure

Apply the rated voltage to the capacitor at room temperature for a period of one hour, or until the leakage current has fallen to a steady value below the specified limit. During re-aging a maximum charging current of twice the specified leakage current or 5 mA (whichever is greater) is suggested.

Reliability

The reliability of a component can be defined as the probability that it will perform satisfactorily under a given set of conditions for a given length of time.

In practice, it is impossible to predict with absolute certainty how any individual component will perform; thus, we must utilize probability theory. It is also necessary to clearly define the level of stress involved (e.g. operating voltage, ripple current, temperature and time). Finally, the meaning of satisfactory performance must be defined by specifying a set of conditions which determine the end of life of the component.

Reliability as a function of time, R(t), is normally expressed as: $R(t)=e^{-\lambda t}$
where R(t) is the probability that the component will perform satisfactorily for time t, and λ is the failure rate.

Failure Rate

The failure rate is the number of components failing per unit time. The failure rate of most electronic components follows the characteristic pattern:

- Early failures are removed during the manufacturing process.
- The operational life is characterized by a constant failure rate.
- The wear out period is characterized by a rapidly increasing failure rate.

The failures in time (FIT) are given with a 60% confidence level for the various type codes. By convention, FIT is expressed as 1×10^{-9} failures per hour. Failure rate is also expressed as a percentage of failures per 1,000 hours.
e.g., 100FIT = 1×10^{-7} failures per hour = 0.01%/1,000 hours

End of Life Definition
Catastrophic Fail: short circuit, open circuit or safety vent operation
Parametric Failure:

- Change in capacitance > ±15%
- Leakage current > specified limit
- ESR > 3 x initial ESR limit

Failure Rate cont'd

MTBF

The mean time between failures (MTBF) is simply the inverse of the failure rate.
MTBF= 1/λ

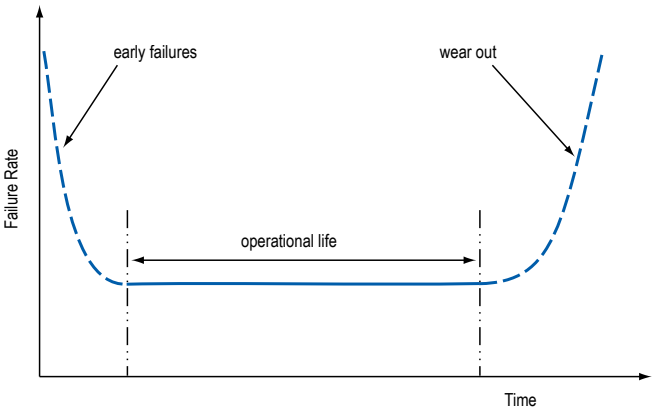

The failure rate is derived from our periodic test results. The failure rate (λ_R) is, therefore, only given at test temperature for life tests. An estimation is also given at 40°C. The expected failure rate for this capacitor range is based on our periodic test results for capacitors with structural similarity. Failure rate is frequently quoted in FIT (Failures In Time) where 1 FIT = 1 x 10^{-9} failures per hour. Failure rates include both catastrophic and parametric failures.

Environmental Compliance

As an environmentally conscious company, KEMET is working continuously with improvements concerning the environmental effects of both our capacitors and their production. In Europe (RoHS Directive) and in some other geographical areas like China, legislation has been put in place to prevent the use of some hazardous materials, such as lead (Pb), in electronic equipment. All products in this catalog are produced to help our customers' obligations to guarantee their products and fulfill these legislative requirements. The only material of concern in our products has been lead (Pb), which has been removed from all designs to fulfill the requirement of containing less than 0.1% of lead in any homogeneous material. KEMET will closely follow any changes in legislation world wide and makes any necessary changes in its products, whenever needed.

Some customer segments such as medical, military and automotive electronics may still require the use of lead in electrode coatings. To clarify the situation and distinguish products from each other, a special symbol is used on the packaging labels for RoHS compatible capacitors.

Because of customer requirements, there may appear additional markings such as LF = Lead Free or LFW = Lead Free Wires on the label.

Table 1 – Ratings & Part Number Reference

VDC	Rated Capacitance	Size Code	Case Size	Ripple Current		ESR Maximum	Impedance Maximum	Part Number
	100 Hz 20°C (µF)		D x L (mm)	100 Hz 85°C (A)	10 kHz 85°C (A)	100 Hz 20°C (mΩ)	10 kHz 20°C (mΩ)	
550	560	KE	51 x 82	4.6	7.4	536	475	ALS6(1)(2)561KE550
550	680	KF	51 x 105	4.9	8.1	441	391	ALS6(1)(2)681KF550
550	820	KF	51 x 105	5.7	9.0	367	325	ALS6(1)(2)821KF550
550	1,000	KJ	51 x 115	6.4	10.1	302	268	ALS6(1)(2)102KJ550
550	1,000	ME	66 x 82	6.5	10.6	303	269	ALS6(1)(2)102ME550
550	1,200	KM	51 x 131	7.1	11.0	252	224	ALS6(1)(2)122KM550
550	1,200	MF	66 x 105	7.8	12.4	254	225	ALS6(1)(2)122MF550
550	1,500	MJ	66 x 115	9.0	14.1	204	181	ALS6(1)(2)152MJ550
550	1,800	MM	66 x 131	10.2	15.6	171	151	ALS6(1)(2)182MM550
550	1,800	NF	77 x 105	10.3	16.0	167	147	ALS6(1)(2)182NF550
550	2,200	MP	66 x 146	11.3	17.1	140	124	ALS6(1)(2)222MP550
550	2,200	NJ	77 x 115	11.7	17.5	137	121	ALS6(1)(2)222NJ550
550	2,200	QH	90 x 98	12.2	18.8	137	120	ALS6(1)(2)222QH550
550	2,700	NM	77 x 131	13.2	19.1	113	100	ALS6(1)(2)272NM550
550	3,300	NP	77 x 146	14.6	20.9	93	83	ALS6(1)(2)332NP550
VDC	**Rated Capacitance**	**Size Code**	**Case Size**	**Ripple Current**		**ESR**	**IMP**	**Part Number**

(1) Mounting Code: 0 = plain can, 1 = threaded mounting stud
(2) Termination Code: See Termination Tables for available options

Mechanical Data

Polarity and Reversed Voltage

Aluminium Electrolytic capacitors manufactured for use in DC applications contain an anode foil and a cathode foil. As such, they are polarized devices and must be connected with the +ve to the anode foil and the -ve to the cathode foil. If this were to be reversed then the electrolytic process that took place in forming the oxide layer on the anode would be recreated in trying to form an oxide layer on the cathode. In forming the cathode foil in this way, heat would be generated and gas given off within the capacitor, usually leading to catastrophic failure.

The cathode foil already possesses a thin stabilized oxide layer. This thin oxide layer is equivalent to a forming voltage of approximately 2 V. As a result, the capacitor can withstand a voltage reversal of up to 2 V for short periods. Above this voltage, the formation process will commence. Aluminium Electrolytic capacitors can also be manufactured for use in intermittent AC applications by using two anode foils in place of one anode and one cathode.

Mounting Position

The capacitor can be mounted in any position as long as the safety vent can operate. It is possible for some electrolyte to be expelled. As this is a conducting liquid, suitable precautions should be initiated by the system designer to avoid secondary short circuits.
The capacitors are designed to be mounted in free air and are not suitable for submersion in liquid.

Insulating Resistance

≥ 100 MΩ at 100 VDC across insulating sleeve.

Voltage Proof

≥ 2,500 VDC across insulating sleeve.

Safety Vent

A safety vent for overpressure is featured on the terminal deck in the form of a rubber plug designed to relieve build-up of internal pressure due to overstress or catastrophic failure.

Marking

Construction

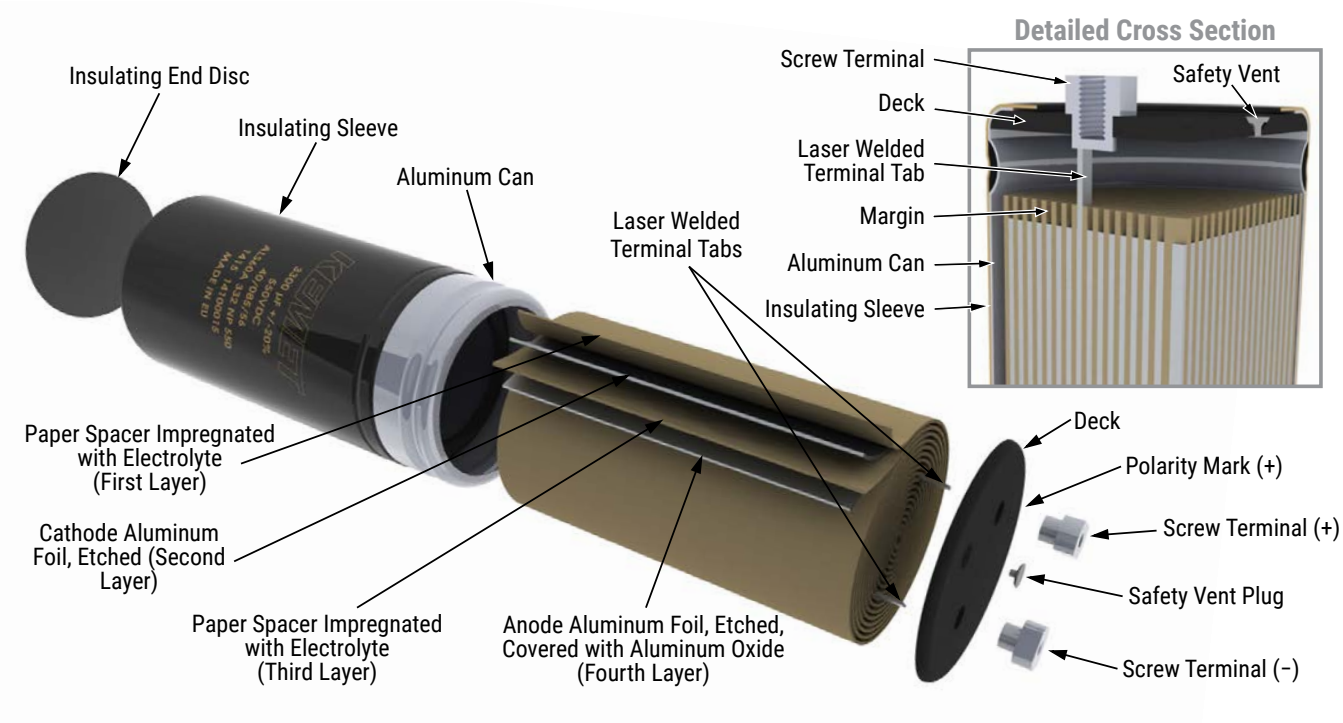

Construction Data

The manufacturing process begins with the anode foil being electrochemically etched to increase the surface area and then "formed" to produce the aluminum oxide layer. Both the anode and cathode foils are then interleaved with absorbent paper and wound into a cylinder. During the winding process, aluminum tabs are attached to each foil to provide the electrical contact.

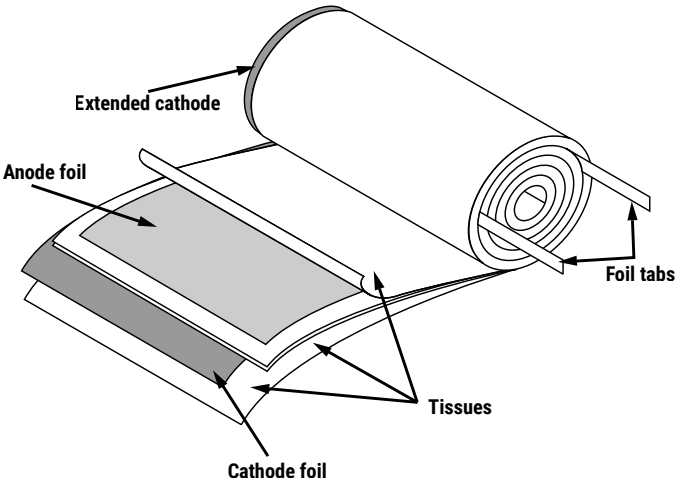

The deck, complete with terminals, is attached to the tabs and then folded down to rest on top of the winding. The complete winding is impregnated with electrolyte before being housed in a suitable container, usually an aluminum can, and sealed. Throughout the process, all materials inside the housing must be maintained at the highest purity and be compatible with the electrolyte.

Each capacitor is aged and tested before being sleeved and packed. The purpose of aging is to repair any damage in the oxide layer and thus reduce the leakage current to a very low level. Aging is normally carried out at the rated temperature of the capacitor and is accomplished by applying voltage to the device while carefully controlling the supply current. The process may take several hours to complete.

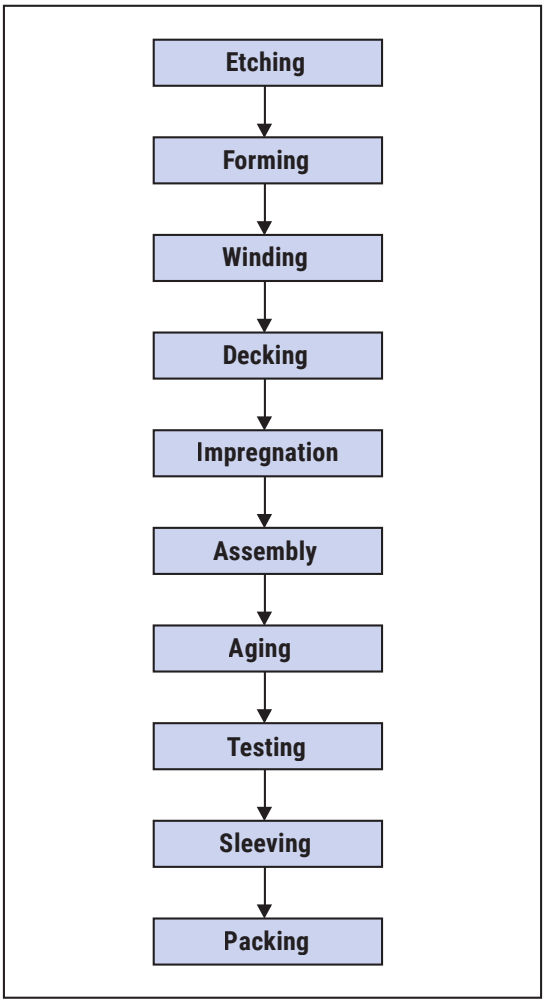

Damage to the oxide layer can occur due to variety of reasons:

- Slitting of the anode foil after forming
- Attaching the tabs to the anode foil
- Minor mechanical damage caused during winding

A sample from each batch is taken by the quality department after completion of the production process. This sample size is controlled by the use of recognized sampling tables defined in BS 6001.

The following tests are applied and may be varied at the request of the customer. In this case the batch, or special procedure, will determine the course of action.

Electrical:

- Leakage current
- Capacitance
- ESR
- Impedance
- Tan Delta

Mechanical/Visual:

- Overall dimensions
- Torque test of mounting stud
- Print detail
- Box labels
- Packaging, including packed quantity

KEMET Electronic Corporation Sales Offices

For a complete list of our global sales offices, please visit www.kemet.com/sales.

Disclaimer

All product specifications, statements, information and data (collectively, the "Information") in this datasheet are subject to change. The customer is responsible for checking and verifying the extent to which the Information contained in this publication is applicable to an order at the time the order is placed.

All Information given herein is believed to be accurate and reliable, but it is presented without guarantee, warranty, or responsibility of any kind, expressed or implied.

Statements of suitability for certain applications are based on KEMET Electronics Corporation's ("KEMET") knowledge of typical operating conditions for such applications, but are not intended to constitute – and KEMET specifically disclaims – any warranty concerning suitability for a specific customer application or use. The Information is intended for use only by customers who have the requisite experience and capability to determine the correct products for their application. Any technical advice inferred from this Information or otherwise provided by KEMET with reference to the use of KEMET's products is given gratis, and KEMET assumes no obligation or liability for the advice given or results obtained.

Although KEMET designs and manufactures its products to the most stringent quality and safety standards, given the current state of the art, isolated component failures may still occur. Accordingly, customer applications which require a high degree of reliability or safety should employ suitable designs or other safeguards (such as installation of protective circuitry or redundancies) in order to ensure that the failure of an electrical component does not result in a risk of personal injury or property damage.

Although all product–related warnings, cautions and notes must be observed, the customer should not assume that all safety measures are indicted or that other measures may not be required.

KEMET is a registered trademark of KEMET Electronics Corporation.