LEGEND ◊ = KEY PRODUCT CHARACTERRISTICS

REVISION HISTORY				
REV	DESCRIPTION	DATE	BY	CHG/No
0	FIRST ISSUE	26/09/14	MH	---

Amphenol Australia RoHS Compliant 2011/65/EU

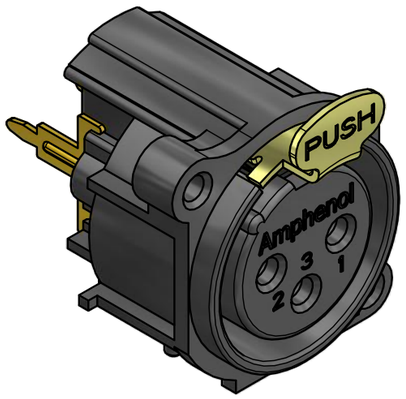

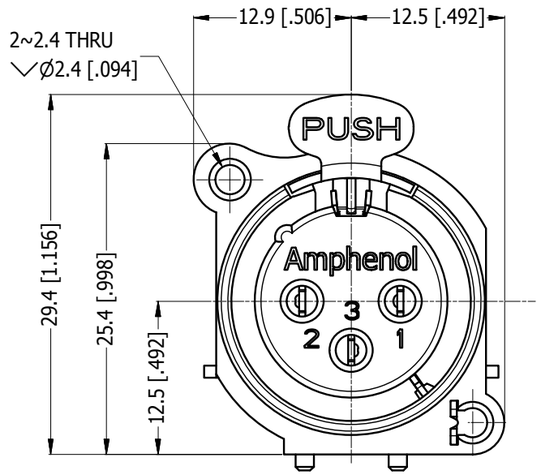

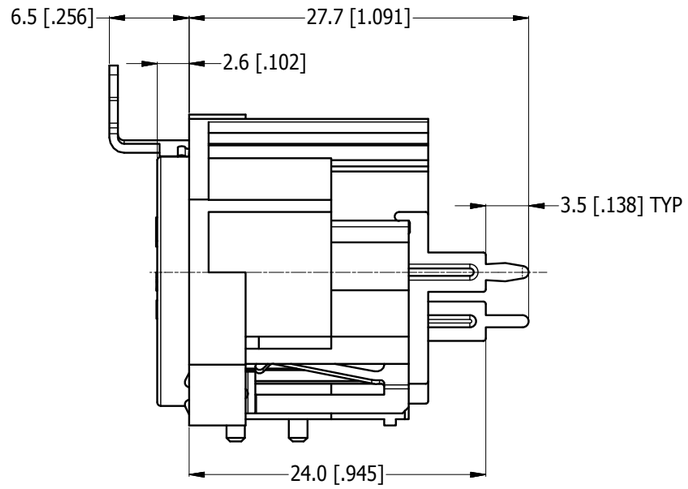

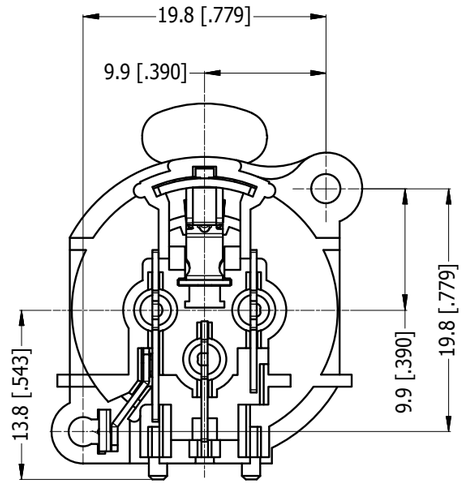

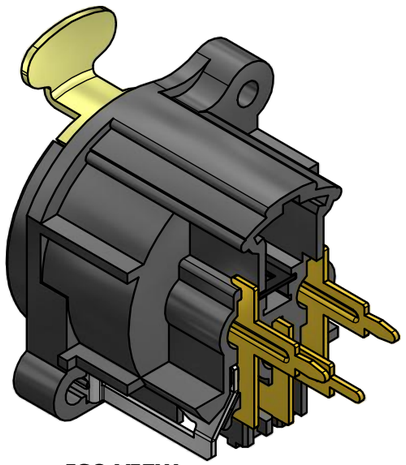

ISO VIEW

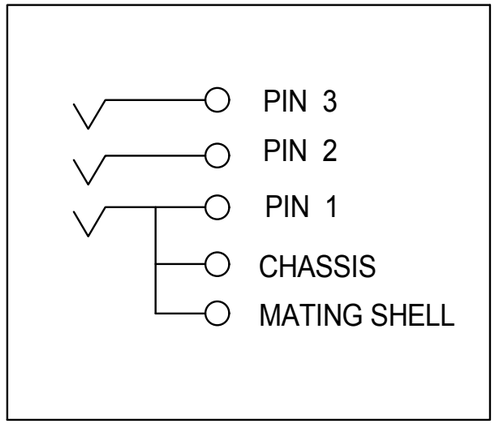

SCHEMATIC CHART

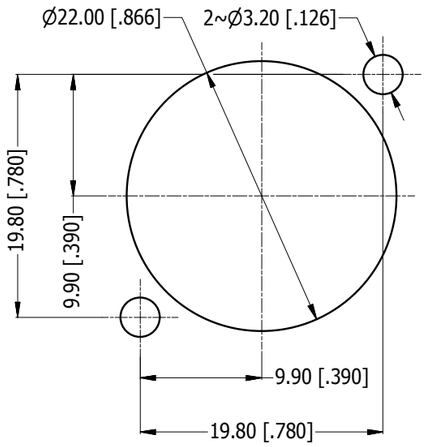

PANEL CUT OUT
REAR VIEW

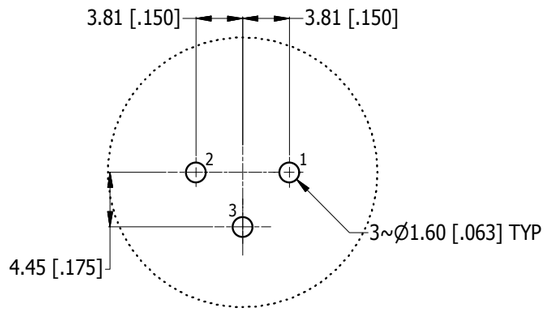

PCB-LAYOUT
COMPONENT SIDE
TOLERANCE: ± 0.05mm [.002"]

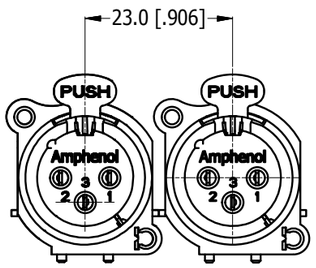

MIN MOUNTING PITCH
SCALE 1:1

UNLESS OTHERWISE SPECIFIED TOLERANCE TO BE		THIS DOCUMENT IS THE PROPERTY OF AMPHENOL AUSTRALIA PTY. LTD. . NO PART THEREOF MAY BE REPRODUCED AND USED WITHOUT THE PRIOR WRITTEN CONSENT OF THE OWNER			Amphenol	Amphenol Australia Pty.Ltd, 22 Industry Blvd, Carrum Downs, VIC 3201	
LINEAR	ANGULAR	MATERIAL: REFER TO COMPONENT	DRN: MH	DATE: 26/09/14	TITLE: AC3FAV1-AU-PRE A-TYPE VERTICAL CUSTOMER DRAWING	PART No: AC3FAV1-AU-PRE	
X ±0.5 X.X ±0.2 X.XX ±0.1	X ±1 X.X' ±30' X.X'X" ±15'		CKD: M.H	DATE: 26/09/14			
BREAK ALL SHARP EDGES AND REMOVE ALL BURRS							
DO NOT SCALE		FINISH: REFER TO COMPONENT	APP'D: P.M	DATE: 26/09/14		DRAWING NO. 55011050-000-2	SHEET 2/2
DIMENSIONS IN MILIMETRES		THIRD ANGLE PROJECTION	SCALE: 2:1	SIZE: A3	CAD FILE 55011050000220		

sales@prom-elec.com / ООО ПРОМЭЛЕКТРОНИКА