D COMPACT ENCLOSED SWITCH

Features

- High precision and long life.
- Suitable for applications demanding higher mechanical strength,
- Gasket diaphragm seal provides high environmental resistance.

Specifications

Item	Standard
Rating	10A, 125V or 250VAC
Contact Resistance	25mΩ max.(initial)
Insulation Resistance	100MΩ min. (at 500VDC)
Dielectric Strength	1,000VAC,50/60Hz for 1 minute
Service Life Mechanically:	1,000,000 operations min.
Service Life Electrically	100,000 operations min.

Product Selection

D □

1

HEAD AND ACTUATOR

5000: Push plunger type
5020: Roller plunger type
5040: Cross Roller plunger type
1000: Lever type
1020: Short Lever type
2000: Lever roller type
2020: Short Lever roller type

Mounting Hole

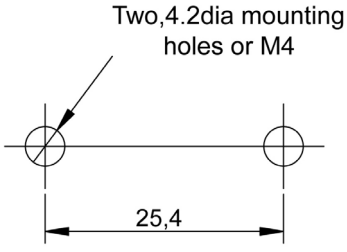

Contact Configuration

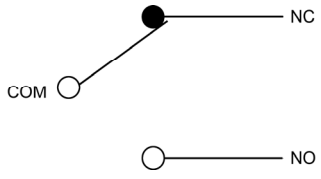

Design, specifications are subject to change without notice.

sales@prom-elec.com / ООО ПРОМЭЛЕКТРОНИКА

D COMPACT ENCLOSED SWITCH

Operating Characteristics

Unit : mm

Item NO. Dimensions

D5000

OF max.	600g
RF min.	100g
PT max.	1.6mm
OT min.	5mm
MD max.	0.2mm
OP	21.8± 1.2mm
FP	--

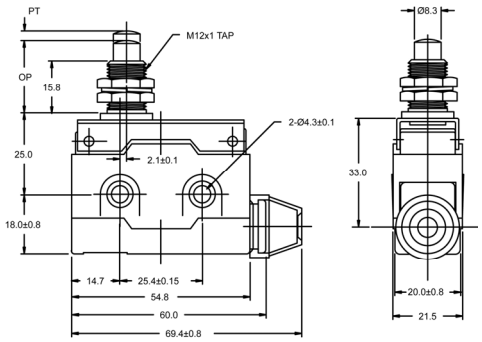

D5020

OF max.	600g
RF min.	100g
PT max.	1.6mm
OT min.	5mm
MD max.	0.2mm
OP	33.35± 1.2mm
FP	--

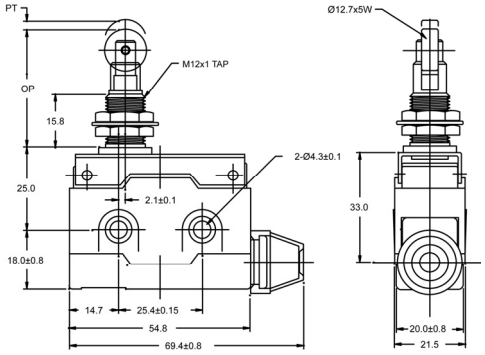

D5040

OF max.	600g
RF min.	100g
PT max.	1.6mm
OT min.	5mm
MD max.	0.2mm
OP	33.35± 1.2mm
FP	--

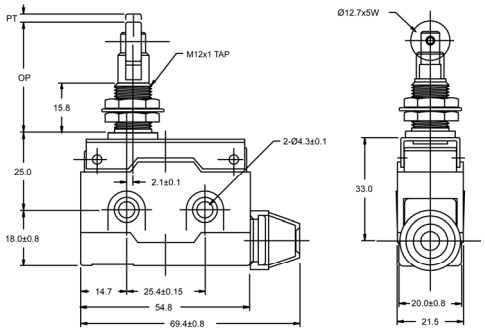

Design, specifications are subject to change without notice.

D COMPACT ENCLOSED SWITCH

Operating Characteristics

Unit : mm

Item NO. | Dimensions

D2000

OF max.	195g
RF min.	28g
PT max.	8.5mm
OT min.	3.2mm
MD max.	2.6mm
OP	40± 1mm
FP	50mm

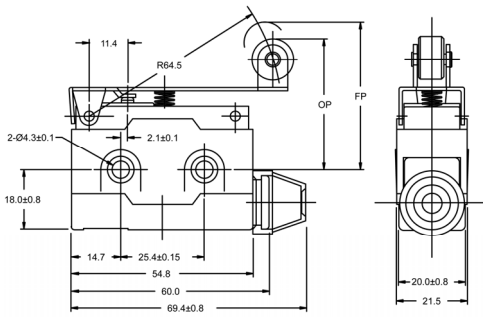

D2020

OF max.	300g
RF min.	40g
PT max.	6mm
OT min.	2mm
MD max.	1.5mm
OP	40±1mm
FP	46mm

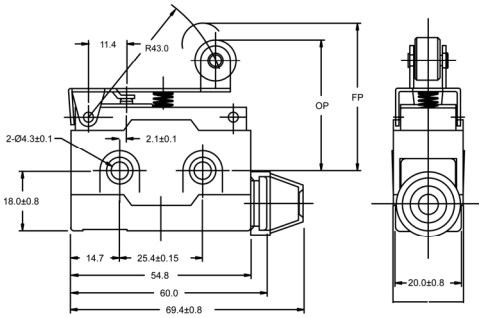

D1000

OF max.	170g
RF min.	25g
PT max.	10mm
OT min.	4mm
MD max.	3mm
OP	25± 1mm
FP	35mm

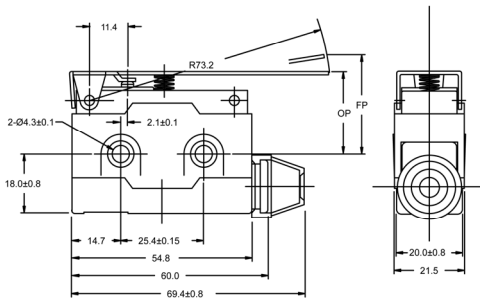

Design, specifications are subject to change without notice.

D COMPACT ENCLOSED SWITCH

Operating Characteristics

Unit : mm

Item NO. **Dimensions**

D1020

OF max.	260g
RF min.	35g
PT max.	7mm
OT min.	2.5mm
MD max.	1.7mm
OP	25± 1mm
FP	32mm

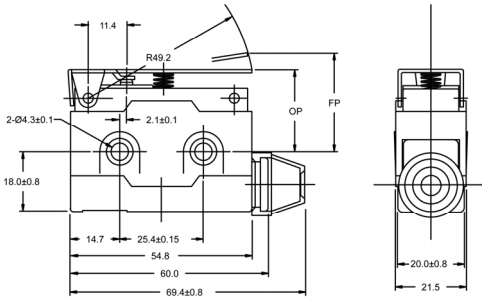

NOTE:

Design, specifications are subject to change without notice.