MEDER electronic
Products for tomorrow...

Europe: +49 / 7731 8399 0 | Email: info@meder.com
USA: +1 / 508 295 0771 | Email: salesusa@meder.com
Asia: +852 / 2955 1682 | Email: salesasia@meder.com

Item No.:
3205172011
Item:
DIP05-1A72-11L

Dimensions (mm)

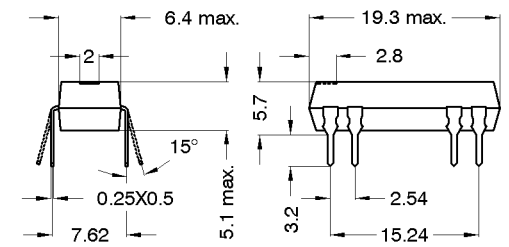

Layout 11L Pitch 2.54/Top View

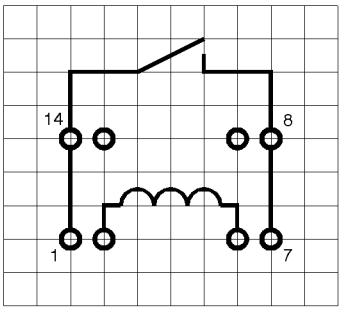

Marking

MEDER-label, type
Production Code
EN 60062

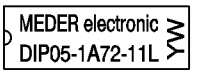

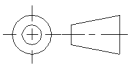

unspec. tol. ±0.1 mm

Coil Data at 20 °C	Conditions	Min	Typ	Max	Unit
Coil resistance		450	500	550	Ohm
Coil voltage			5		VDC
Rated power			50		mW
Coil current			10		mA
Thermal resistance	max. Relay temperature = operating temperature + self heating		112		K/W
Inductance			35		mH
Pull-In voltage				3,5	VDC
Drop-Out voltage		0,75			VDC

Contact data 66	Conditions	Min	Typ	Max	Unit
Contact rating	Any DC combination of V & A not to exceed their individual max.'s			10	W
Switching voltage (>20 AT)	DC or Peak AC			200	V
Switching current	DC or Peak AC			0,5	A
Carry current	DC or Peak AC			1,25	A
Contact resistance static	Measured with 40% overdrive Start Value			150	mOhm
Insulation resistance	RH <45 %, 100 VDC test voltage	5			TOhm
Breakdown voltage (>20 AT)	according to IEC 255-5	0,5			kV DC
Operate time incl. bounce	measured with 40% overdrive			0,5	ms
Release time	measured with no coil excitation			0,1	ms
Capacitance	@ 10 kHz across open switch		0,2		pF

Special Product Data	Conditions	Min	Typ	Max	Unit
Number of contacts		1			
Contact - form		A - NO			
Dielectric Strength Coil/Contact	according to IEC 255-5	1,5			kV DC
Insulation resistance Coil/Contact	40°C, 95% R.H.	5			TOhm
Capacity Coil/Contact	@ 10 kHz		1		pF
Case colour		black			
Housing material		epoxy resin			
Connection pins		Copper alloy tin plated			
Magnetic Shield		no			
Reach / RoHS conformity		yes			
Approval		UL File No. NRNT2.E156887			
Approval		UL File No. NRNT8.E156887			

sales@prom-elec.com / ООО ПРОМЭЛЕКТРОНИКА

MEDER electronic
Products for tomorrow...

Europe: +49 / 7731 8399 0 | Email: info@meder.com
USA: +1 / 508 295 0771 | Email: salesusa@meder.com
Asia: +852 / 2955 1682 | Email: salesasia@meder.com

Item No.:
3205172011
Item:
DIP05-1A72-11L

Environmental data	Conditions	Min	Typ	Max	Unit
Shock	1/2 sine wave duration 11ms			50	g
Vibration	from 10 - 2000 Hz			20	g
Operating temperature		-20		70	°C
Storage temperature		-35		95	°C
Soldering temperature	wave soldering max. 5 sec.			260	°C
Washability		fully sealed			

General data	Conditions	Min	Typ	Max	Unit
Total weigth			1,4		g
Packaging		Tube per 25 piece			