Super Flux Pure White LED
OSPW7161D-L

■Features

- High Power LEDs
- 7.62*7.62mm Standard Directivity
- Superior Weather-resistance
- Water Clear Type
- RoHS Compliant

■Applications

- Automotive Dashboard Lighting

■Directivity

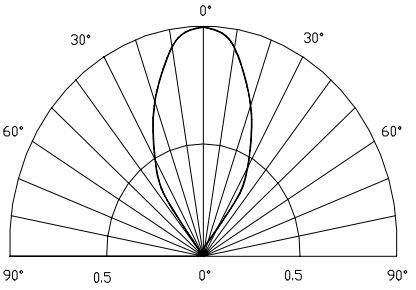

■Outline Dimension

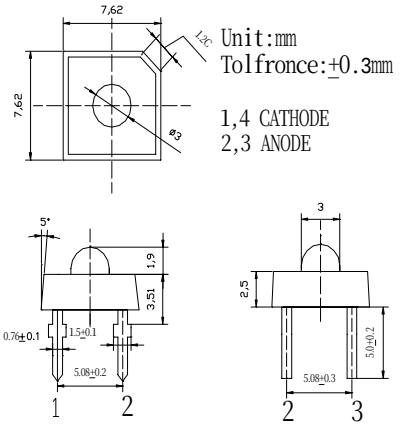

■Absolute Maximum Rating (Ta=25℃)

Item	Symbol	Value	Unit
DC Forward Current	I_F	75	mA
Pulse Forward Current*	I_{FP}	100	mA
Reverse Voltage	V_R	5	V
Power Dissipation	P_D	120	mW
Operating Temperature	Topr	-30~+80	℃
Storage Temperature	Tstg	-30~+100	℃
Lead Soldering Temperature	Tsol	260℃/3sec	-

*Pulse width Max.10ms Duty ratio max 1/10

■Chromaticity Ranks

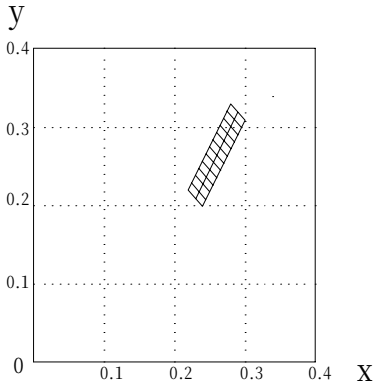

■Electrical -Optical Characteristics (Ta=25℃)

Item	Symbol	Condition	Min.	Typ.	Max.	Unit
DC Forward Voltage	V_F	I_F=20mA	2.8	3.4	4.0	V
DC Reverse Current	I_R	V_R=5V	-	-	10	Ua
Luminous Intensity	I_V	I_F=20mA	1120	2180	-	mcd
Chromaticity Coordinate*	Item		Bottom	Left	Top	Right
	x	I_F=20mA	0.24	0.22	0.28	0.30
	y	I_F=20mA	0.20	0.22	0.33	0.31
50% Power Angle	$2\theta_{1/2}$	I_F=20mA	-	60	-	deg

*Please refer to CIE 1931 chromaticity diagram.

Rank	Chromaticity		Rank	Chromaticity	
	x	y		x	y
A1	0.24	0.20	A2	0.23	0.21
	0.23	0.21		0.22	0.22
	0.25	0.275		0.24	0.26
	0.26	0.283		0.25	0.28
B1	0.26	0.283	B2	0.25	0.28
	0.25	0.275		0.24	0.26
	0.27	0.31		0.26	0.29
	0.28	0.326		0.27	0.31
C1	0.28	0.326	C2	0.27	0.31
	0.27	0.31		0.26	0.29
	0.29	0.32		0.28	0.33
	0.30	0.31		0.29	0.32

sales@prom-elec.com / ООО ПРОМЭЛЕКТРОНИКА