Panasonic

SAFETY COMPONENTS

MAC-I LIMIT SWITCHES

sales@prom-elec.com / ООО ПРОМЭЛЕКТРОНИКА

Features

The MAC-I limit switches are developed and manufactured according to the rules set out in IEC international publications and EN European standards.

Easy to use, electromechanical limit switches offer specific qualities:

- Visible operation
- Able to switch strong currents (10A conventional thermal current)
- Precise operating points (consistency)
- Immune to electromagnetic disturbances
- Electrically separated contacts
- N.C. contacts with positive opening operation

Content

MA150 series 4

MA160 series 5

SLC/SLZ series 30mm 6

SLC/SLZ series 50mm 7

SLF series metal casing 30/50mm 8

SLF series aluminium casing 40/60mm 9

MAP/MAM/MDP/MDM series 30mm 10

MAP/MAM/MDP/MDM series 50mm 11

Dimensions 12-17

Specifications 18

Accessories 19

European Standards

- EN 50005 Low-voltage switchgear and controlgear for industrial use - Terminal marking and distinctive number: General rules (CEI 17-17).
- EN 50013 Low-voltage switchgear and controlgear for industrial use - Terminal marking and distinctive number for particular control switches (CEI 17-17).
- EN 50041 Low-voltage switchgear and controlgear for industrial use - Control switches - Position switches 42,5 x 80 - Dimensions and characteristics.
- EN 50047 Low-voltage switchgear and controlgear for industrial use - Control switches - Position switches 30 x 55 - Dimensions and characteristics.
- EN 60947-1 Low-voltage switchgear and controlgear for industrial use - Part 1: General rules (CEI EN 60947-1).
- EN 60947-5-1 Low-voltage switchgear and controlgear for industrial use - Part 5: Control circuit devices and switching elements - Section 1: Electromechanical control circuit devices (CEI EN 60947-5-1) - Chapter 3: Special requirements for control switches with positive opening operation.
- EN 60529 Degrees of protection provided by enclosures (IP code).
- EN 61058-1 Switches for appliances. Part 1: General requirements.

Electrical connection

Replace the symbol "•" with the required thread:

0: for PG 13.5 cable gland

On request:

2: for 1/2" NPT cable gland (with adapter in MA150 and MA160 series)

3: for PG11 cable gland

4: for M16 x 1.5 cable gland

5: for M20 x 1.5 cable gland

MA150
90° adjustable head

MA150T
Fully turnable head

Available contact blocks

X11: Slow action break before make 1NO + 1NC

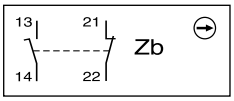

X12P: Slow action break before make 1NO + 2NC

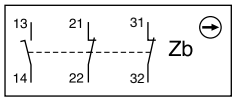

X21P: Slow action break before make 2NO + 1NC

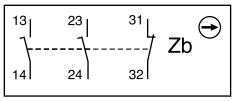

W02: Simultaneous slow action 2NC

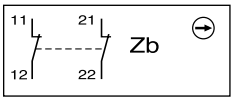

W03P: Simultaneous slow action 3NC

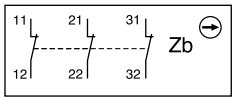

MA150 series

30mm polymeric casing.
1 cable inlet. IP65

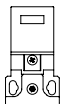

Contact blocks		
X11 (1NO+1NC)	MA15•T••X11	MA15•FT••X11
X12P (1NO+2NC)	MA15•T••X12P	MA15•FT••X12P
X21P (2NO+1NC)	MA15•T••X21P	MA15•FT••X21P
W02 (2NC)	MA15•T••W02	MA15•FT••W02
W03P (3NC)	MA15•T••W03P	MA15•FT••W03P

MA150M series

30mm metal casing.
1 cable inlet. IP66

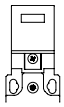

Contact blocks		
X11(1NO+1NC)	MA15•MT••X11	MA15•MFT••X11
X12P (1NO+2NC)	MA15•MT••X12P	MA15•MFT••X12P
X21P (2NO+1NC)	MA15•MT••X21P	MA15•MFT••X21P
W02 (2NC)	MA15•MT••W02	MA15•MFT••W02
W03P (3NC)	MA15•MT••W03P	MA15•MFT••W03P

Ordering code MA150 (T) series :

M A 1 5 0 M F T 8 3 X 1 1

Electrical connection
see top of page

Metal casing

Fully turnable head

Operating keys
T83, T84, T85
T86, T87, T88, T90
(see page 10)

Contact blocks

X11: Slow action break before make 1NO + 1NC

X12P: Slow action break before make 1NO + 2NC

X21P: Slow action break before make 2NO + 1NC

W02: Simultaneous slow action 2NC

W03P: Simultaneous slow action 3NC

Electrical connection

Replace the symbol "•" with the required thread:

0: for PG 13.5 cable gland

On request:

2: for 1/2" NPT cable gland (with adapter in MA150 and MA160 series)

3: for PG11 cable gland

4: for M16 x 1.5 cable gland

5: for M20 x 1.5 cable gland

MA160
90° adjustable head

MA160T
Fully turnable head

Available contact blocks

X11: Slow action break before make 1NO + 1NC

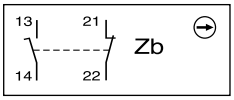

X12P: Slow action break before make 1NO + 2NC

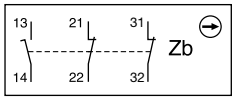

X21P: Slow action break before make 2NO + 1NC

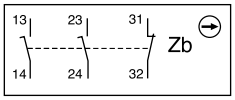

W02: Simultaneous slow action 2NC

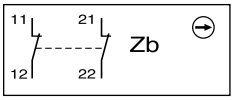

W03P: Simultaneous slow action 3NC

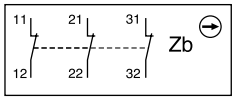

MA160 series

50mm polymeric casing.
2 cable inlets. IP65

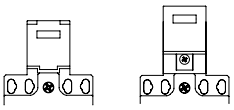

Contact blocks		
X11 (1NO+1NC)	MA16•T••X11	MA16•FT••X11
X12P (1NO+2NC)	MA16•T••X12P	MA16•FT••X12P
X21P (2NO+1NC)	MA16•T••X21P	MA16•FT••X21P
W02 (2NC)	MA16•T••W02	MA16•FT••W02
W03P (3NC)	MA16•T••W03P	MA16•FT••W03P

MA160M series

50mm metal casing.
3 cable inlets. IP66

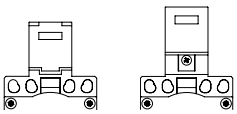

Contact blocks		
X11 (1NO+1NC)	MA16•MT••X11	MA16•MFT••X11
X12P (1NO+2NC)	MA16•MT••X12P	MA16•MFT••X12P
X21P (2NO+1NC)	MA16•MT••X21P	MA16•MFT••X21P
W02 (2NC)	MA16•MT••W02	MA16•MFT••W02
W03P (3NC)	MA16•MT••W03P	MA16•MFT••W03P

Ordering code MA160 (T) series :

M A 1 6 0 M F T 8 3 X 1 1

Electrical connection
see top of page

Metal casing

Fully turnable head

Operating keys
T83, T84, T85
T86, T87, T88, T90
(see page 10)

Contact blocks

X11: Slow action break before make 1NO + 1NC

X12P: Slow action break before make 1NO + 2NC

X21P: Slow action break before make 2NO + 1NC

W02: Simultaneous slow action 2NC

W03P: Simultaneous slow action 3NC

Electrical connection

Replace the symbol "•" with the required thread:
1: for PG 13.5 cable gland
On request:
2: for 1/2" NPT cable gland
(with adapter in MA150 and MA160 series)
3: for PG11 cable gland
4: for M16 x 1.5 cable gland
5: for M20 x 1.5 cable gland

C71
Zinc plated steel shaft
C72
Stainless steel shaft

Z61
Zinc plated steel lever

C71
Zinc plated steel shaft
C72
Stainless steel shaft

Z61
Zinc plated steel lever

Available contact blocks

X11: Slow action break before make 1NO + 1NC

X12P: Slow action break before make 1NO + 2NC

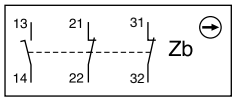

X21P: Slow action break before make 2NO + 1NC

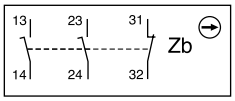

W02: Simultaneous slow action 2NC

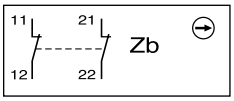

W03P: Simultaneous slow action 3NC

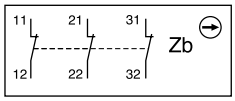

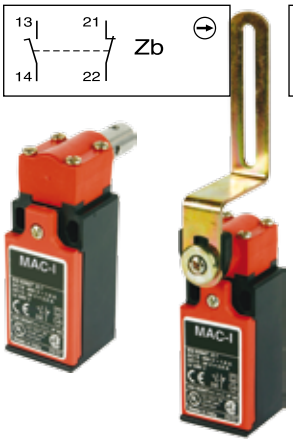

SLC & SLZ series

30mm polymeric casing.
1 cable inlet. IP65

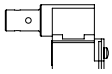

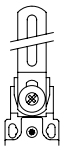

Contact blocks		
X11 (1NO+1NC)	SL•C7•X11	SL•Z61X11
X12P (1NO+2NC)	SL•C7•X12P	SL•Z61X12P
X21P (2NO+1NC)	SL•C7•X21P	SL•Z61X21P
W02 (2NC)	SL•C7•W02	SL•Z61W02
W03P (3NC)	SL•C7•W03P	SL•Z61W03P

SLC & SLZ series

30mm metal casing.
1 cable inlet. IP66

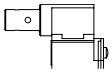

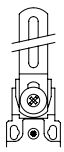

Contact blocks		
X11 (1NO+1NC)	SL•MC7•X11	SL•MZ61X11
X12P (1NO+2NC)	SL•MC7•X12P	SL•MZ61X12P
X21P (2NO+1NC)	SL•MC7•X21P	SL•MZ61X21P
W02 (2NC)	SL•MC7•W02	SL•MZ61W02
W03P(3NC)	SL•MC7•W03P	SL•MZ61W03P

Ordering code SLC / SLZ (M) series :

S L 1 M C 7 1 X 1 1

Electrical connection
see top of page

Metal casing

Shaft SLC type
C71, C72

Lever SLZ type
Z61

Contact blocks

X11: Slow action break before make 1NO + 1NC
X12P: Slow action break before make 1NO + 2NC
X21P: Slow action break before make 2NO + 1NC
W02: Simultaneous slow action 2NC
W03P: Simultaneous slow action 3NC

Electrical connection

Replace the symbol "•" with the required thread:

1: for PG 13.5 cable gland

On request:

2: for 1/2" NPT cable gland
(with adapter in MA150 and MA160 series)

3: for PG11 cable gland

4: for M16 x 1.5 cable gland

5: for M20 x 1.5 cable gland

C71
Zinc plated steel shaft
C72
Stainless steel shaft

Z61
Zinc plated steel lever

C71
Zinc plated steel shaft
C72
Stainless steel shaft

Z61
Zinc plated steel lever

Available contact blocks

X11: Slow action break before make 1NO + 1NC

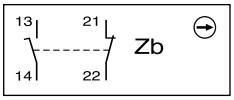

X12P: Slow action break before make 1NO + 2NC

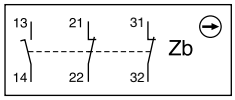

X21P: Slow action break before make 2NO + 1NC

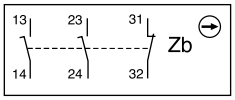

W02: Simultaneous slow action 2NC

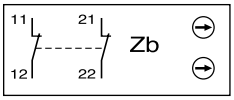

W03P: Simultaneous slow action 3NC

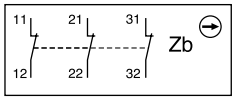

SLC & SLZ series

50mm polymeric casing.
2 cable inlet. IP65

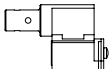

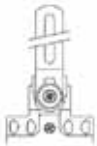

Contact blocks		
X11(1NO+1NC)	SL•5C7•X11	SL•5Z61X11
X12P (1NO+2NC)	SL•5C7•X12P	SL•5Z61X12P
X21P (2NO+1NC)	SL•5C7•X21P	SL•5Z61X21P
W02 (2NC)	SL•5C7•W02	SL•5Z61W02
W03P (3NC)	SL•5C7•W03P	SL•5Z61W03P

SLC & SLZ series

50mm metal casing.
3 cable inlet. IP66

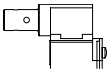

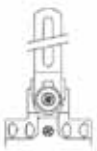

Contact blocks		
X11(1NO+1NC)	SL•M5C7•X11	SL•M5Z61X11
X12P (1NO+2NC)	SL•M5C7•X12P	SL•M5Z61X12P
X21P (2NO+1NC)	SL•M5C7•X21P	SL•M5Z61X21P
W02 (2NC)	SL•M5C7•W02	SL•M5Z61W02
W03P (3NC)	SL•M5C7•W03P	SL•M5Z61W03P

Ordering code SLC / SLZ (M) series :

S L 1 5 M C 7 1 X 1 1

Electrical connection
see top of page

50mm

Metal casing

Shaft SLC type
C71, C72

Lever SLZ type
Z61

Contact blocks

X11: Slow action break before make 1NO + 1NC

X12P: Slow action break before make 1NO + 2NC

X21P: Slow action break before make 2NO + 1NC

W02: Simultaneous slow action 2NC

W03P: Simultaneous slow action 3NC

Electrical connection

Replace the symbol "•" with the required thread:

1: for PG 13.5 cable gland

On request

2: for 1/2" NPT cable gland (with adapter in MA150 and MA160 series)

3: for PG11 cable gland

4: for M16 x 1.5 cable gland

5: for M20 x 1.5 cable gland

F96
Pull wire without reset for simple stop

F98
Pull wire with reset for emergency stop

Available contact blocks

X11: Slow action break before make 1NO + 1NC

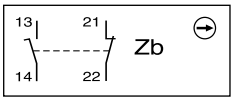

X12P: Slow action break before make 1NO + 2NC

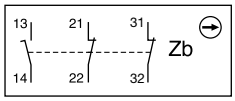

X21P: Slow action break before make 2NO + 1NC

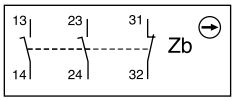

W02: Simultaneous slow action 2NC

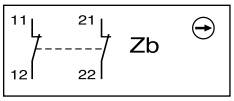

W03P: Simultaneous slow action 3NC

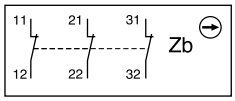

SLF series

30mm metal casing
1 cable inlet. IP66

Contact blocks		
X11(1NO+1NC)	SL•F96X11	SL•F98X11
X12P (1NO+2NC)	SL•F96X12P	SL•F98X12P
X21P (2NO+1NC)	SL•F96X21P	SL•F98X21P
W02 (2NC)	SL•F96W02	SL•F98W02
W03P (3NC)	SL•F96W03P	SL•F98W03P

SLF series

50mm metal casing.
3 cable inlet. IP66

Contact blocks		
X11(1NO+1NC)	SL•5F96X11	SL•5F98X11
X12P (1NO+2NC)	SL•5F96X12P	SL•5F98X12P
X21P (2NO+1NC)	SL•5F96X21P	SL•5F98X21P
W02 (2NC)	SL•5F96W02	SL•5F98W02
W03P (3NC)	SL•5F96W03P	SL•5F98W03P

Ordering code SLF (M) series :

SL 1 5 F96 X11

Electrical connection
see top of page

50mm Metal casing

F96 = pull wire w.o. reset
F98 = pull wire with reset

Contact blocks

X11: Slow action break before make 1NO + 1NC
X12P: Slow action break before make 1NO + 2NC
X21P: Slow action break before make 2NO + 1NC
W02: Simultaneous slow action 2NC
W03P: Simultaneous slow action 3NC

Electrical connection

Replace the symbol "•" with the required thread:

1: for PG 13.5 cable gland

On request:

2: for 1/2" NPT cable gland
(with adapter in MA150 and MA160 series)

5: for M20 x 1.5 cable gland

F97
Pull wire without reset for simple stop

F99
Pull wire with reset for emergency stop

Available contact blocks

X11: Slow action break before make 1NO + 1NC

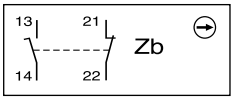

X12: Slow action break before make 1NO + 2NC

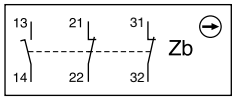

X21: Slow action break before make 2NO + 1NC

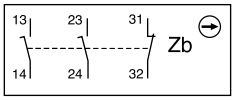

W02: Simultaneous slow action 2NC

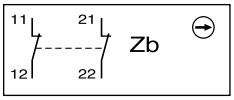

W03: Simultaneous slow action 3NC

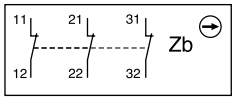

SLF series

40mm aluminium casing.
1 cable inlet. IP66

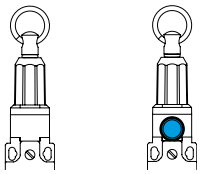

Contact blocks		
X11 (1NO+1NC)	SL•F97X11	SL•F99X11
X12 (1NO+2NC)	SL•F97X12	SL•F99X12
X21 (2NO+1NC)	SL•F97X21	SL•F99X21
W02 (2NC)	SL•F97W02	SL•F99W02
W03 (3NC)	SL•F97W03	SL•F99W03

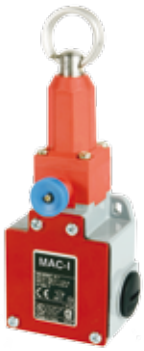

SLF series

60mm aluminium casing.
3 cable inlet. IP66

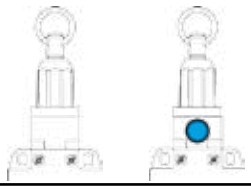

Contact blocks		
X11(1NO+1NC)	SL•6F97X11	SL•6F99X11
X12 (1NO+2NC)	SL•6F97X12	SL•6F99X12
X21 (2NO+1NC)	SL•6F97X21	SL•6F99X21
W02 (2NC)	SL•6F97W02	SL•6F99W02
W03 (3NC)	SL•6F97W03	SL•6F99W03

Ordering code SLF (A) series :

SL 1 6 F97 X11

Electrical connection
see top of page

60mm aluminium casing

F97 = pull wire w.o. reset
F99 = pull wire with reset

Contact blocks

X11: Slow action break before make 1NO + 1NC
X12: Slow action break before make 1NO + 2NC
X21: Slow action break before make 2NO + 1NC
W02: Simultaneous slow action 2NC
W03: Simultaneous slow action 3NC

Available contact blocks

X12P: Slow action break before make 1NO + 2NC

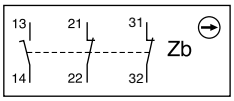

X21P: Slow action break before make 2NO + 1NC

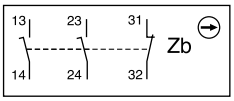

Z11: Snap action 1NO + 1NC

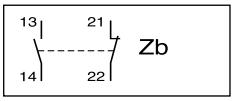

Z02: Snap action 2NC

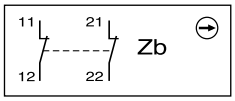

X11: Slow action break before make 1NO + 1NC

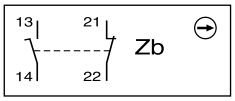

W02: Simultaneous slow action 2NC

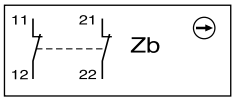

W03P: Simultaneous slow action 3NC

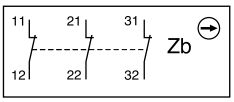

MAP-R series

30mm polymeric limit switches - IP65 - 1 cable inlet

Cable inlets
MAP1: PG 13.5
MAP2: 1/2" NPT (with adapter)
MAP3: PG 11
MAP4: M 16 x 1.5
MAP5: M 20 x 1.5

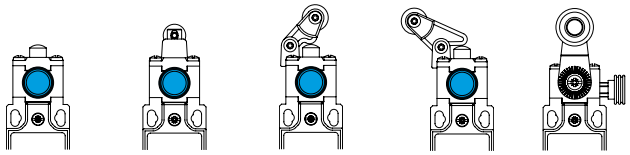

Contact blocks	Steel plunger with reset	Steel plunger with nylon roller with reset	Steel plunger with nylon roller with reset	Steel plunger with nylon roller with reset	Lever with nylon roller with reset
	R11	R13	R31	R32	R41
X11 Non overlapping Slow action contacts (1NO + 1NC)	MAP•R11X11	MAP•R13X11	MAP•R31X11	MAP•R32X11	MAP•R41X11
X12P Non overlapping Slow action contacts (1NO + 2NC)	MAP•R11X12P	MAP•R13X12P	MAP•R31X12P	MAP•R32X12P	MAP•R41X12P
X21P Non overlapping Slow action contacts (2NO + 1NC)	MAP•R11X21P	MAP•R13X21P	MAP•R31X21P	MAP•R32X21P	MAP•R41X21P
Z11 Snap action contacts (1NO + 1NC)	MAP•R11Z11	MAP•R13Z11	MAP•R31Z11	MAP•R32Z11	MAP•R41Z11
Z02 Snap action contacts (2NC)	MAP•R11Z02	MAP•R13Z02	MAP•R31Z02	MAP•R32Z02	MAP•R41Z02
W02 Slow action contacts (2NC)	MAP•R11W02	MAP•R13W02	MAP•R31W02	MAP•R32W02	MAP•R41W02
W03P Slow action contacts (3NC)	MAP•R11W03P	MAP•R13W03P	MAP•R31W03P	MAP•R32W03P	MAP•R41W03P

MAM-R series

30mm metal limit switches - with polymeric working heads - IP66 - 1 cable inlet

Cable inlets
MAM1: PG13.5
MAM2: 1/2" NPT
MAM3: PG11
MAM4: M16 x 1.5
MAM5: M20 x 1.5

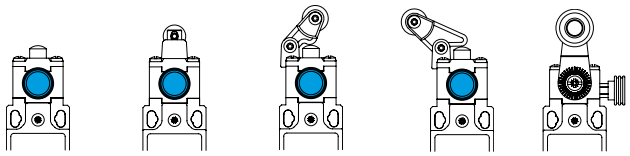

Contact blocks	Steel plunger with reset	Steel plunger with nylon roller with reset	Steel plunger with nylon roller with reset	Steel plunger with nylon roller with reset	Lever with nylon roller with reset
	R11	R13	R31	R32	R41
X11 Non overlapping Slow action contacts (1NO + 1NC)	MAM•R11X11	MAM•R13X11	MAM•R31X11	MAM•R32X11	MAM•R41X11
X12P Non overlapping Slow action contacts (1NO + 2NC)	MAM•R11X12P	MAM•R13X12P	MAM•R31X12P	MAM•R32X12P	MAM•R41X12P
X21P Non overlapping Slow action contacts (2NO + 1NC)	MAM•R11X21P	MAM•R13X21P	MAM•R31X21P	MAM•R32X21P	MAM•R41X21P
Z11 Snap action contacts (1NO + 1NC)	MAM•R11Z11	MAM•R13Z11	MAM•R31Z11	MAM•R32Z11	MAM•R41Z11
Z02 Snap action contacts (2NC)	MAM•R11Z02	MAM•R13Z02	MAM•R31Z02	MAM•R32Z02	MAM•R41Z02
W02 Slow action contacts (2NC)	MAM•R11W02	MAM•R13W02	MAM•R31W02	MAM•R32W02	MAM•R41W02
W03P Slow action contacts (3NC)	MAM•R11W03P	MAM•R13W03P	MAM•R31W03P	MAM•R32W03P	MAM•R41W03P

Other versions available on request

Ordering code MAP/MAM series :

M AP1 R11 Z11

Cable inlets
MAP1, MAP2, MAP3, MAP4, MAP5
MAM1, MAM2, MAM3, MAM4, MAM5
See product description.

Head types
R11, R13, R31, R32, R41

Contact blocks

Z11:	Snap action 1NO+1NC
Z02:	Snap action 2NC
X11:	Slow action break before make 1NO+1NC
X12P:	Slow action break before make 1NO+2NC
X21P:	Slow action break before make 2NO+1NC
W02:	Simultaneous slow action 2NC
W03P:	Simultaneous slow action 3NC

Available contact blocks

X12P: Slow action break before make 1NO + 2NC

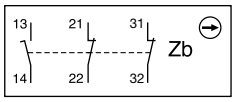

X21P: Slow action break before make 2NO + 1NC

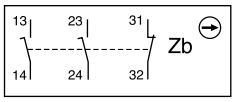

Z11: Snap action 1NO + 1NC

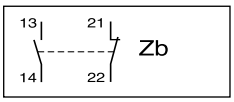

Z02: Snap action 2NC

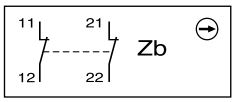

X11: Slow action break before make 1NO + 1NC

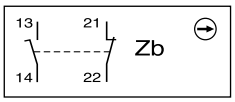

W02: Simultaneous slow action 2NC

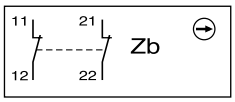

W03P: Simultaneous slow action 3NC

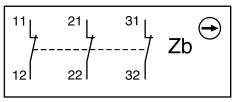

MDP-R series

50mm polymeric limit switches - IP65 - 2 cable inlets

Cable inlets
MDP1: PG 13.5
MDP2: 1/2" NPT (with adapter)
MDP3: PG 11
MDP4: M 16 x 1.5
MDP5:M 20 x 1.5

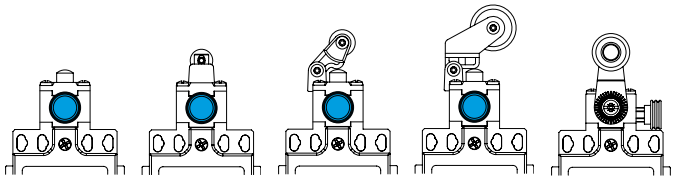

Contact blocks	Steel plunger with reset	Steel plunger with nylon roller with reset	Steel plunger with nylon roller with reset	Steel plunger with nylon roller with reset	Lever with nylon roller with reset
	R11	R13	R31	R38	R41
X11 Non overlapping Slow action contacts (1NO + 1NC)	MDP•R11X11	MDP•R13X11	MDP•R31X11	MDP•R38X11	MDP•R41X11
X12P Non overlapping Slow action contacts (1NO + 1NC)	MDP•R11X12P	MDP•R13X12P	MDP•R31X12P	MDP•R38X12P	MDP•R41X12P
X21P Non overlapping Slow action contacts (2NO + 1NC)	MDP•R11X21P	MDP•R13X21P	MDP•R31X21P	MDP•R38X21P	MDP•R41X21P
Z11 Snap action contacts (1NO + 1NC)	MDP•R11Z11	MDP•R13Z11	MDP•R31Z11	MDP•R38Z11	MDP•R41Z11
Z02 Snap action contacts (2NC)	MDP•R11Z02	MDP•R13Z02	MDP•R31Z02	MDP•R38Z02	MDP•R41Z02
W02 Slow action contacts (2NC)	MDP•R11W02	MDP•R13W02	MDP•R31W02	MDP•R38W02	MDP•R41W02
W03P Slow action contacts (3NC)	MDP•R11W03P	MDP•R13W03P	MDP•R31W03P	MDP•R38W03P	MDP•R41W03P

Other versions available on request

MDM-R series

50mm metal limit switches - with polymeric working heads - IP66 - 3 cable inlets

Cable inlets
MDM1: PG 13.5
MDM2: 1/2" NPT
MDM3: PG 11
MDM4: M 16 x 1.5
MDM5: M 20 x 1.5

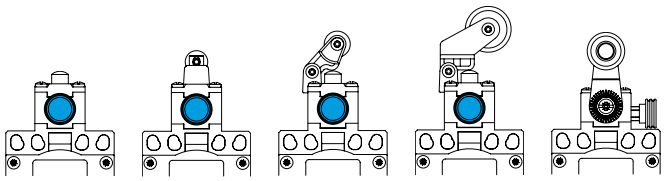

Contact blocks	Steel plunger with reset	Steel plunger with nylon roller with reset	Steel plunger with nylon roller with reset	Steel plunger with nylon roller with reset	Lever with nylon roller with reset
	R11	R13	R31	R38	R41
X11 Non overlapping Slow action contacts (1NO + 1NC)	MDM•R11X11	MDM•R13X11	MDM•R31X11	MDM•R38X11	MDM•R41X11
X12P Non overlapping Slow action contacts (1NO + 1NC)	MDM•R11X12P	MDM•R13X12P	MDM•R31X12P	MDM•R38X12P	MDM•R41X12P
X21P Non overlapping Slow action contacts (2NO + 1NC)	MDM•R11X21P	MDM•R13X21P	MDM•R31X21P	MDM•R38X21P	MDM•R41X21P
Z11 Snap action contacts (1NO + 1NC)	MDM•R11Z11	MDM•R13Z11	MDM•R31Z11	MDM•R38Z11	MDM•R41Z11
Z02 Snap action contacts (2NC)	MDM•R11Z02	MDM•R13Z02	MDM•R31Z02	MDM•R38Z02	MDM•R41Z02
W02 Slow action contacts (2NC)	MDM•R11W02	MDM•R13W02	MDM•R31W02	MDM•R38W02	MDM•R41W02
W03P Slow action contacts (3NC)	MDM•R11W03P	MDM•R13W03P	MDM•R31W03P	MDM•R38W03P	MDM•R41W03P

Other versions available on request

Ordering code MDP/MDM series :

M DP1 R11 Z11

Cable inlets
MDP1, MDP2, MDP3, MDP4, MDP5
MDM1, MDM2, MDM3, MDM4, MDM5
See product description.

Head types
R11, R13, R31, R38, R41

Contact blocks

Z11:	Snap action 1NO+1NC
Z02:	Snap action 2NC
X11:	Slow action break before make 1NO+1NC
X12P:	Slow action break before make 1NO+2NC
X21P:	Slow action break before make 2NO+1NC
W02:	Simultaneous slow action 2NC
W03P:	Simultaneous slow action 3NC

MA150

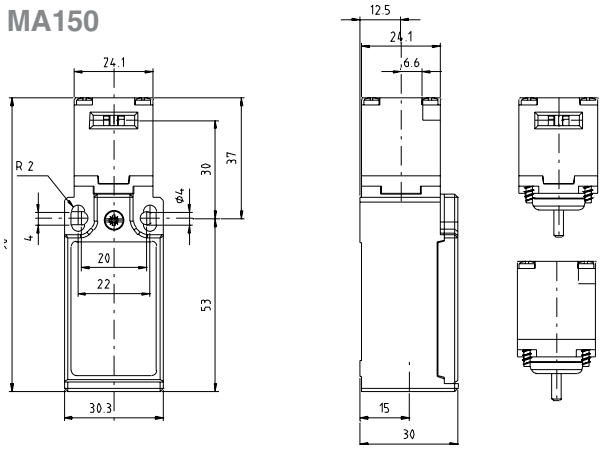

MA160

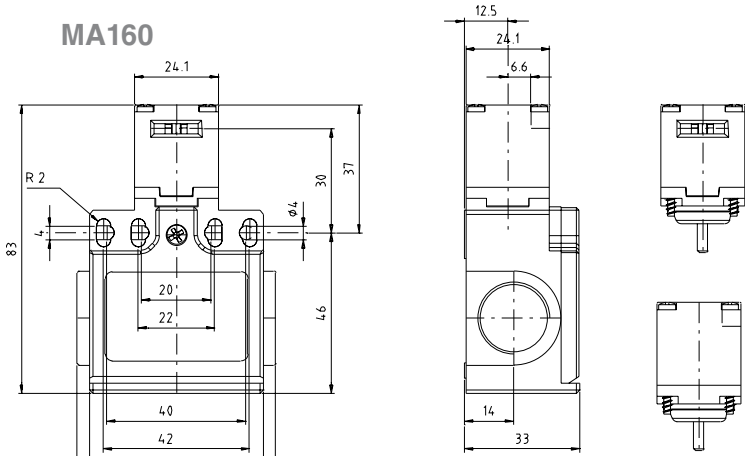

SLC 30mm

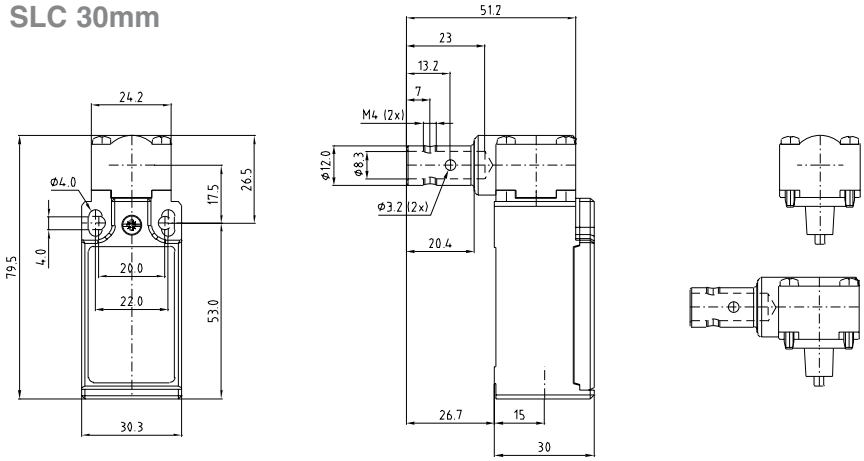

SLC 50mm

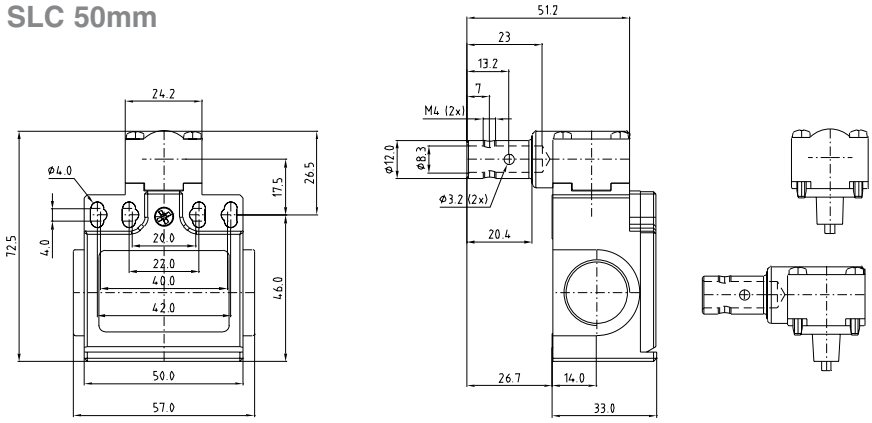

All measurements in mm

SLF 30mm without reset

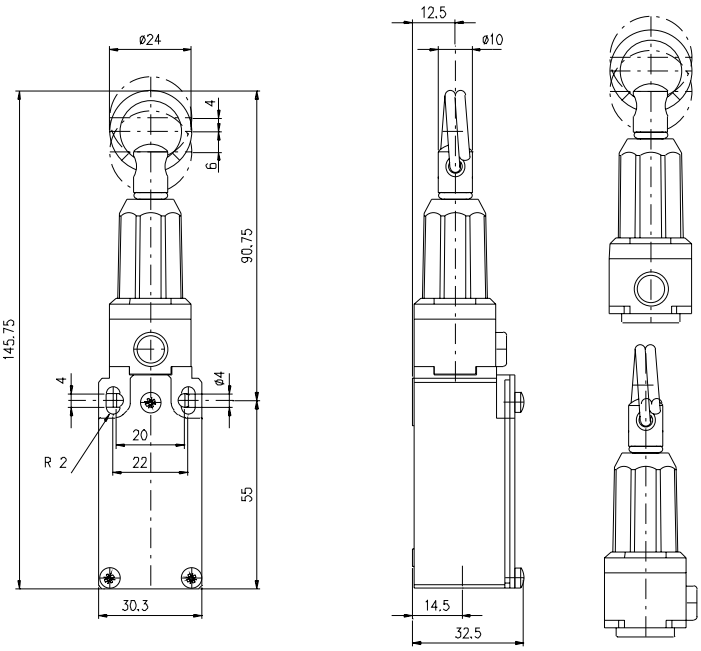

SLF 30mm with reset

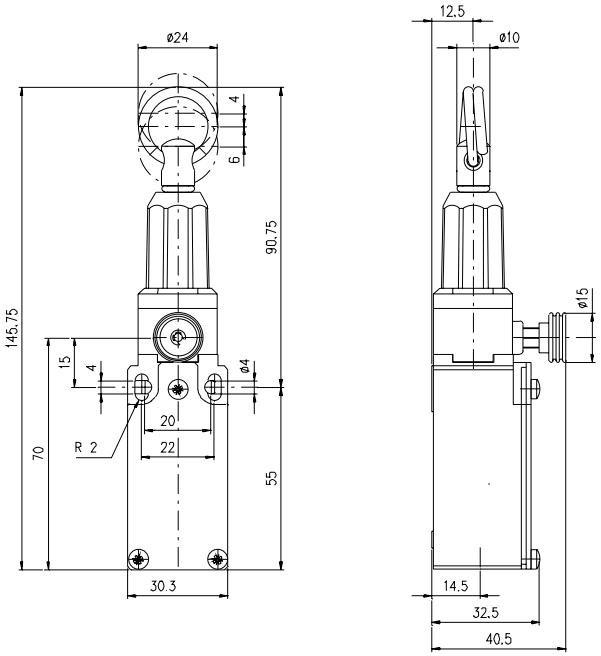

SLF 50mm without reset

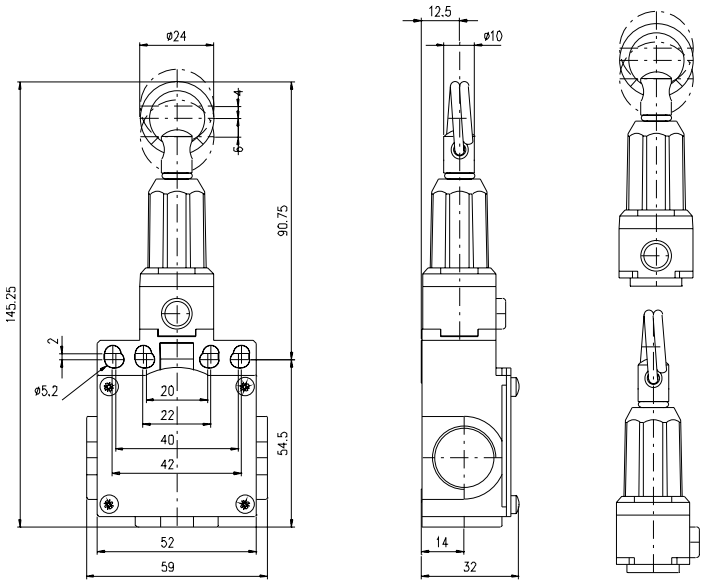

SLF 50mm with reset

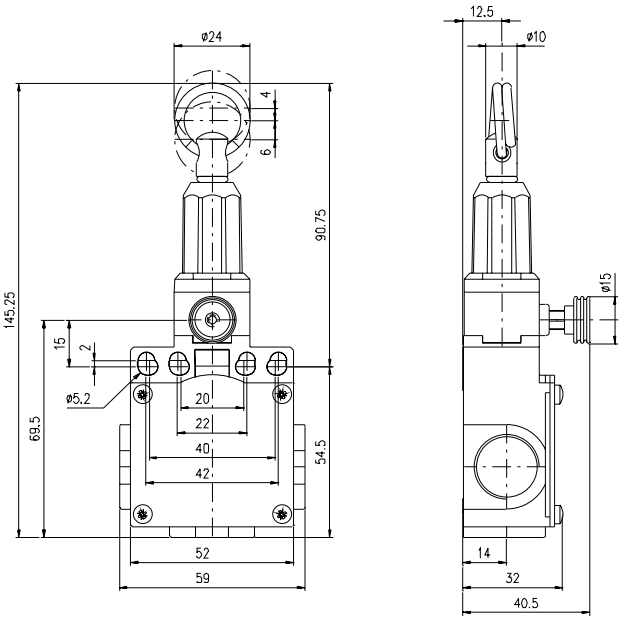

All measurements in mm

SLF 40mm

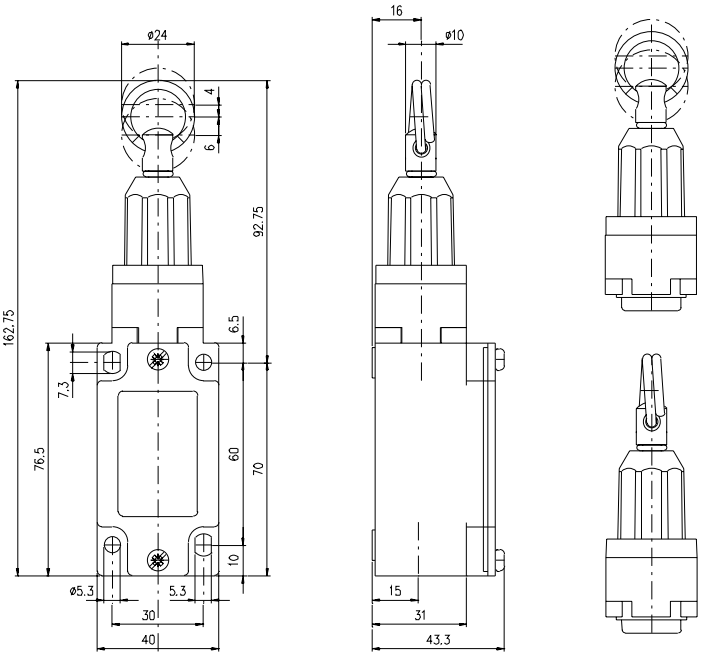

SLF 40mm with reset button

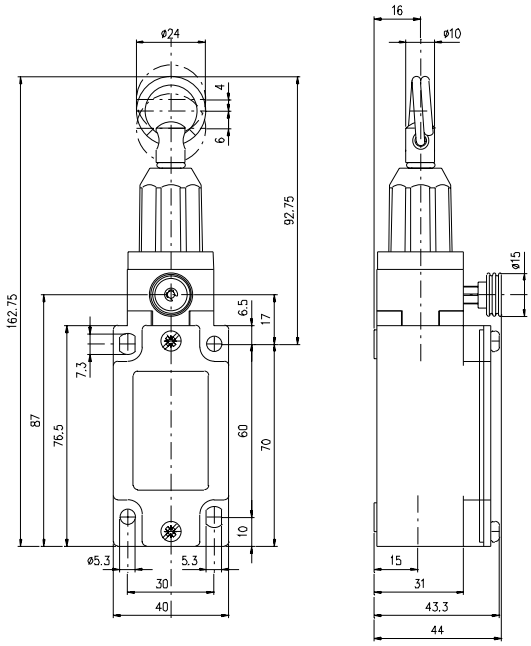

SLF 60mm

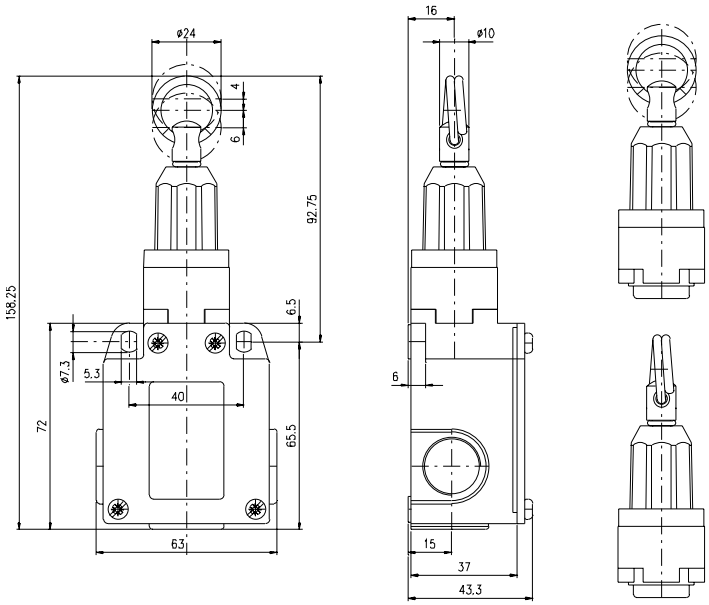

SLF 60mm with reset button

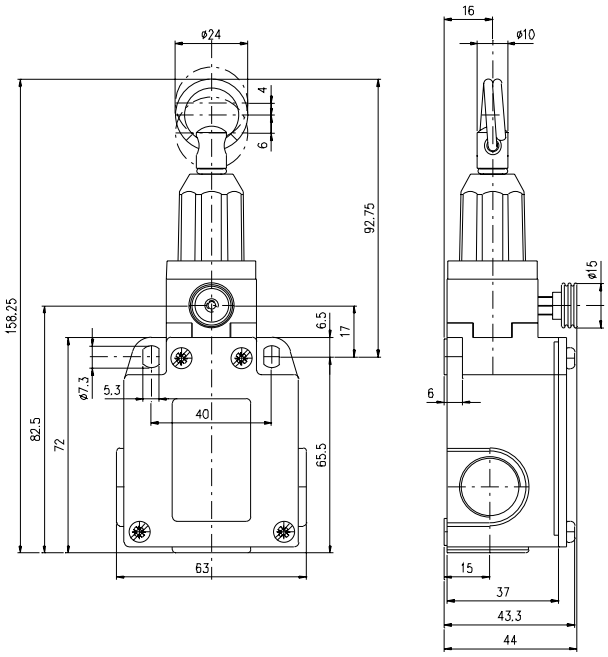

All measurements in mm

SLZ 30mm

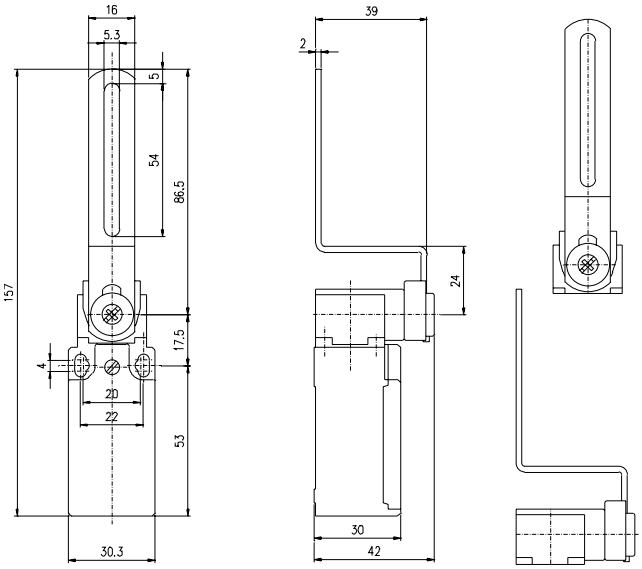

SLZ 50mm

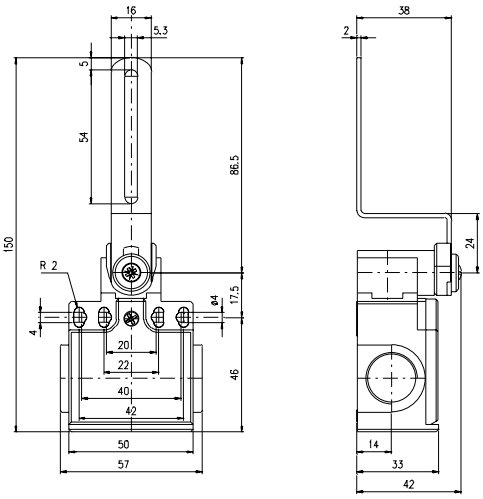

MAPR11

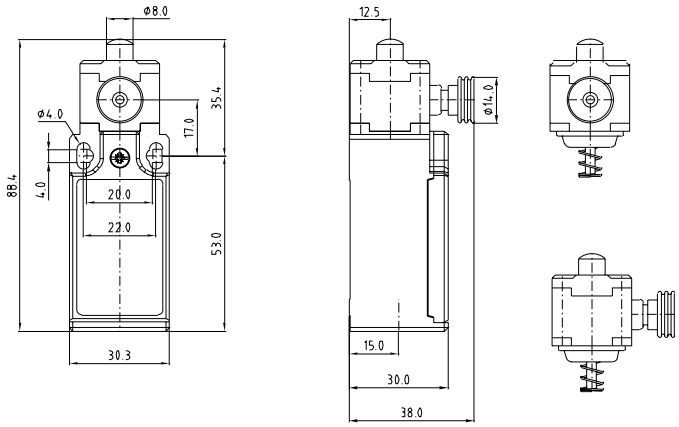

MAPR13

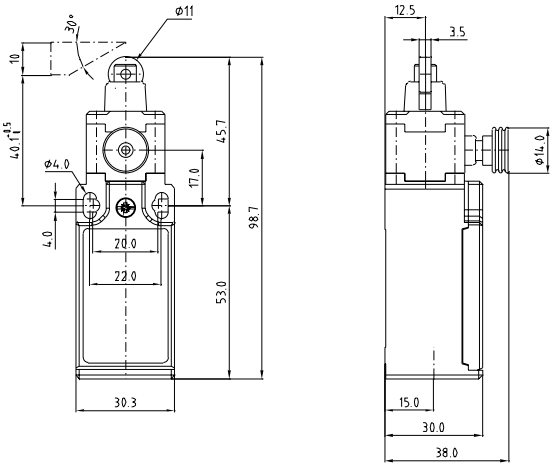

MAPR31

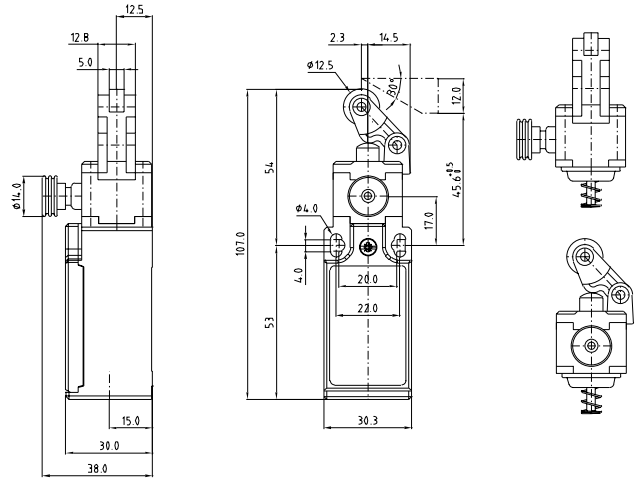

MAPR32

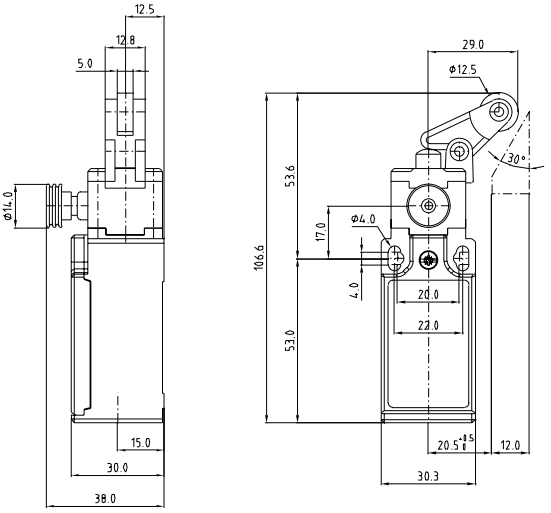

All measurements in mm

MAPR41

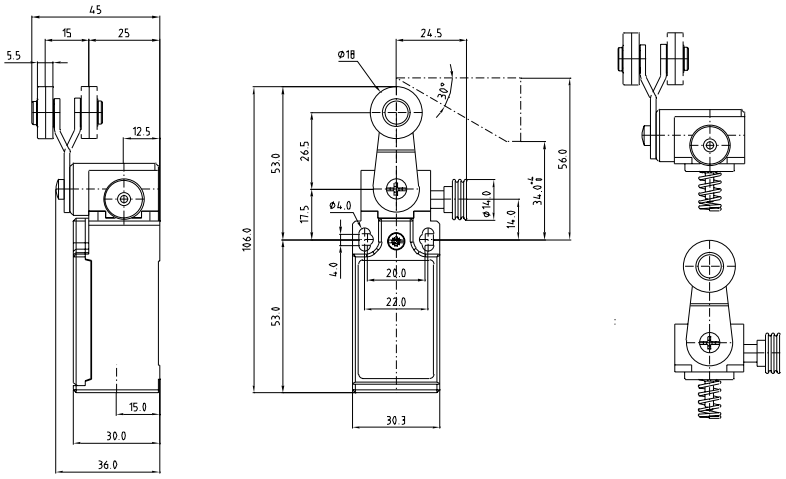

MDPR11

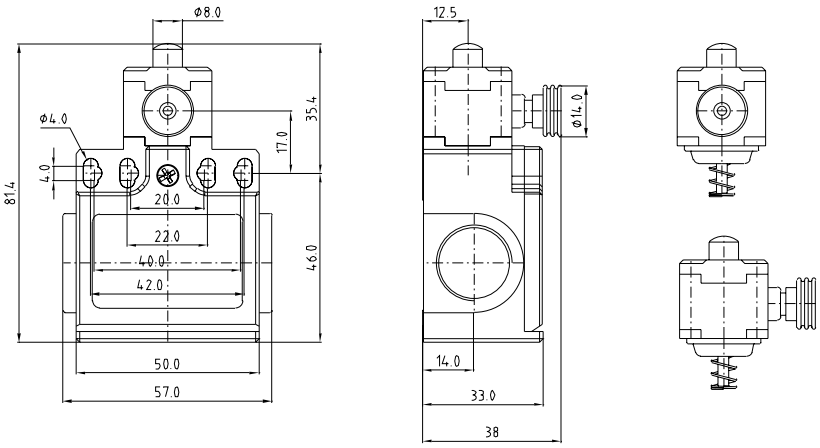

MDPR13

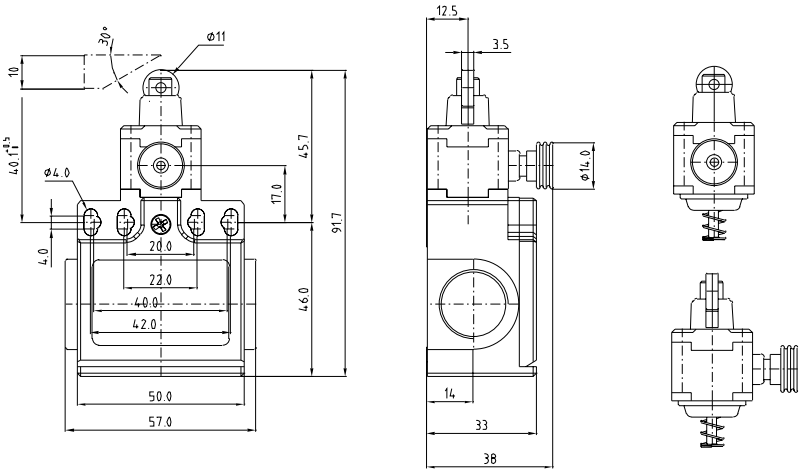

All measurements in mm

MDPR31

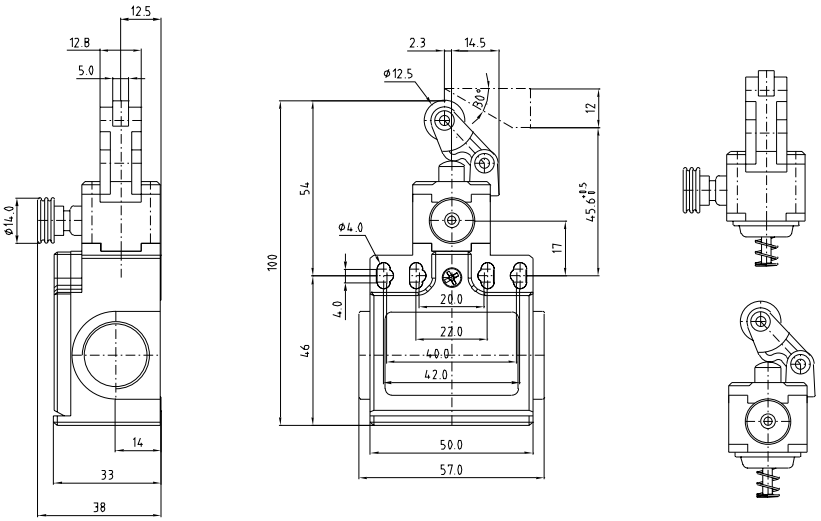

MDPR38

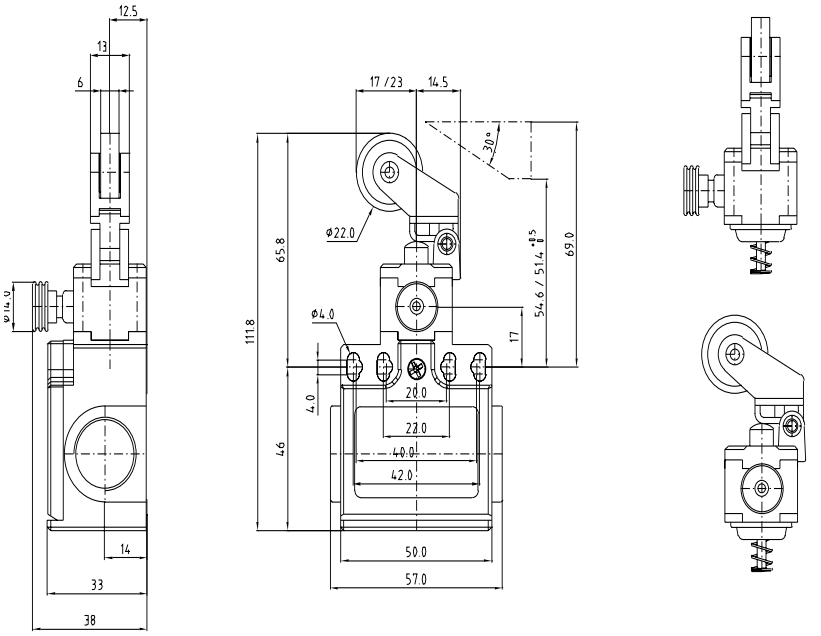

MDPR41

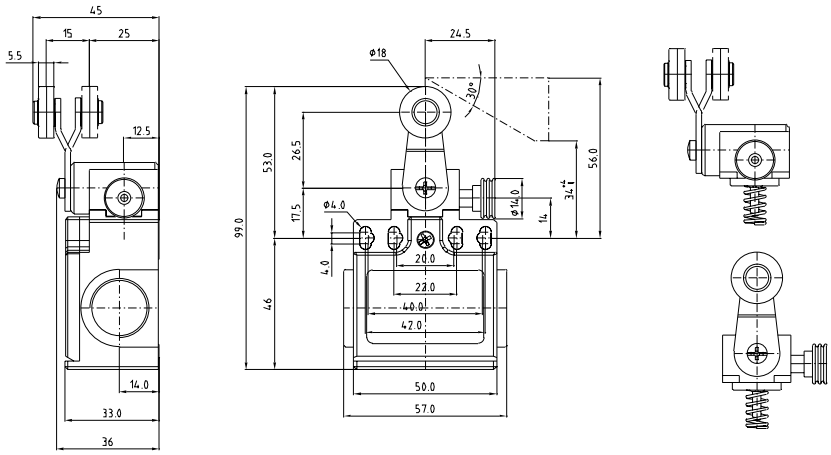

All measurements in mm

Specifications

Type	MAC-I MA 150/160	MAC-I SLC	MAC-I SLF	MAC-I SLZ	MAC-I MA-R	MAC-I MD-R
	limit switches with operating keys	limit switches with shaft lever	limit switches with pull wire	limit switches with steel lever	limit switches with pull button reset	limit switches with pull button reset
Casing	Polymeric		Metal	Polymeric/metal		
Standards	IEC 947-5-1, EN 60947-5-1, UL 508, CSA C22-2 No 14					
Operating temperature range	-25°C to +70°C					
Protection against electrical shock (IEC 536)	class II			class I		
Protection degree	IP65			IP66		
Rated insulation voltage (acc. to IEC 529)	Ui= 690V (MA150M/160M;SLC-M;SLZ-M;SLF-M series Ui=400V,)					
Rated impulsed withstand voltage (acc. to IEC 947-1)	Uimp= 4kV					
Short-circuit protection	10A type gG(gl)					
Rated operational current (acc. to IEC 947-5-1)	AC-15: 24V-10A; 230V-3,1A; 380V-1, 9A DC-13: 24V-2,8A; 250V-0,27A					

Specifications

Operating keys for MA150/160							
Description	**Bent key**	**Flat key**	**Bent key**	**Flat Key**	**Shock absorbing bent key**	**Shock absorbing flat key**	**Adjustable joint key**
Centre distance fixing holes	22mm	22mm	13mm	13mm	15mm	15mm	40mm
Order code	T83	T84	T85	T86	T87	T88	T90

You can find further information on our homepage: www.panasonic-electric-works.com

Accessories

OCC 08

Stay bolt

MOR 05

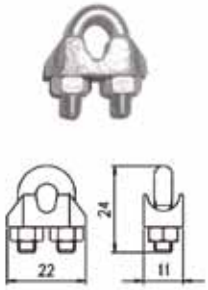

Rope clamp

RED 05

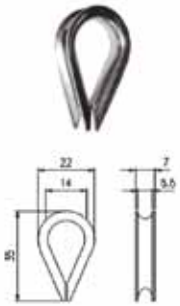

Rope eye

FUN 05

Code:	Meters
FUN05M010	10
FUN05M015	15
FUN05M020	20
FUN05M025	25
FUN05M102	102

Rope Ø 5mm

Key safety switch

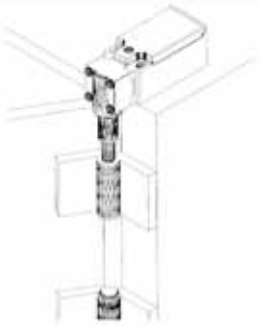

Shaft safety switch

Z lever safety switch

SLF series 30mm,50mm metal casing → 6m max.
SLF series 40mm, 60mm aluminium casing → 16m max.

SLF series 30mm,50mm metal casing → 15m max.
SLF series 40mm, 60mm aluminium casing → 25m max.

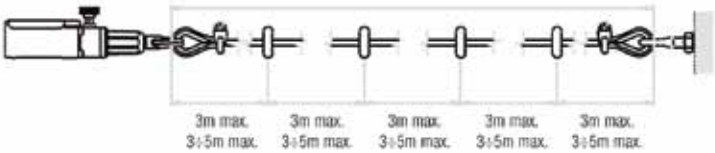

Notes

North America	Europe	Asia Pacific	China	Japan

Panasonic Electric Works

Please contact our Global Sales Companies in:

Europe

Headquarters	**Panasonic Electric Works Europe AG**	Rudolf-Diesel-Ring 2, 83607 Holzkirchen, Tel. +49 (0) 8024 648-0, Fax +49 (0) 8024 648-111, www.panasonic-electric-works.com
Austria	**Panasonic Electric Works Austria GmbH**	Josef Madersperger Str. 2, 2362 Biedermannsdorf, Tel. +43 (0) 2236-26846, Fax +43 (0) 2236-46133 www.panasonic-electric-works.at
	Panasonic Industrial Devices Materials Europe GmbH	Ennshafenstraße 30, 4470 Enns, Tel. +43 (0) 7223 883, Fax +43 (0) 7223 88333, www.panasonic-electronic-materials.com
Benelux	**Panasonic Electric Works Sales Western Europe B.V.**	De Rijn 4, (Postbus 211), 5684 PJ Best, (5680 AE Best), Netherlands, Tel. +31 (0) 499 372727, Fax +31 (0) 499 372185, www.panasonic-electric-works.nl
Czech Republic	**Panasonic Electric Works Europe AG**	Administrative centre PLATINIUM, Veveri 111, 616 00 Brno, Tel. +420 541 217 001, Fax +420 541 217 101, www.panasonic-electric-works.cz
France	**Panasonic Electric Works Sales Western Europe B.V.**	Succursale française, 10, rue des petits ruisseaux, 91370 Verrières Le Buisson, Tél. +33 (0) 1 6013 5757, Fax +33 (0) 1 6013 5758, www.panasonic-electric-works.fr
Germany	**Panasonic Electric Works Europe AG**	Rudolf-Diesel-Ring 2, 83607 Holzkirchen, Tel. +49 (0) 8024 648-0, Fax +49 (0) 8024 648-111, www.panasonic-electric-works.de
Hungary	**Panasonic Electric Works Europe AG**	Magyarországi Közvetlen Kereskedelmi Képviselet, 1117 Budapest, Neumann János u. 1., Tel. +36 1 999 89 26 www.panasonic-electric-works.hu
Ireland	**Panasonic Electric Works UK Ltd.**	Irish Branch Office, Dublin, Tel. +353 (0) 14600969, Fax +353 (0) 14601131, www.panasonic-electric-works.co.uk
Italy	**Panasonic Electric Works Italia srl**	Via del Commercio 3-5 (Z.I. Ferlina), 37012 Bussolengo (VR), Tel. +39 0456752711, Fax +39 0456700444, www.panasonic-electric-works.it
Nordic Countries	**Panasonic Electric Works Europe AG**	Filial Nordic, Knarrarnäsgatan 15, 164 40 Kista, Sweden, Tel. +46 859476680, Fax +46 859476690, www.panasonic-electric-works.se
	Panasonic Eco Solutions Nordic AB	Jungmansgatan 12, 21119 Malmö, Tel. +46 40 697 7000, Fax +46 40 697 7099, www.panasonic-fire-security.com
Poland	**Panasonic Electric Works Polska sp. z o.o**	ul. Wołoska 9A, 02-583 Warszawa, Tel. +48 22 338-11-33, Fax +48 22 338-12-00, www.panasonic-electric-works.pl
Spain	**Panasonic Electric Works España S.A.**	Barajas Park, San Severo 20, 28042 Madrid, Tel. +34 913293875, Fax +34 913292976, www.panasonic-electric-works.es
Switzerland	**Panasonic Electric Works Schweiz AG**	Grundstrasse 8, 6343 Rotkreuz, Tel. +41 (0) 41 7997050, Fax +41 (0) 41 7997055, www.panasonic-electric-works.ch
United Kingdom	**Panasonic Electric Works UK Ltd.**	Sunrise Parkway, Linford Wood, Milton Keynes, MK14 6LF, Tel. +44 (0) 1908 231555, Fax +44 (0) 1908 231599, www.panasonic-electric-works.co.uk

North & South America

USA	**Panasonic Industrial Devices Sales Company of America**	629 Central Avenue, New Providence, N.J. 07974, Tel. 1-908-464-3550, Fax 1-908-464-8513, www.pewa.panasonic.com

Asia Pacific/China/Japan

China	**Panasonic Electric Works Sales (China) Co. Ltd.**	Level 2, Tower W3, The Towers Oriental Plaza, No. 2, East Chang An Ave., Dong Cheng District, Beijing 100738, Tel. +86-10-5925-5988, Fax +86-10-5925-5973
Hong Kong	**Panasonic Industrial Devices Automation Controls Sales (Hong Kong) Co., Ltd.**	RM1205-9, 12/F, Tower 2, The Gateway, 25 Canton Road, Tsimshatsui, Kowloon, Hong Kong, Tel. +852-2956-3118, Fax +852-2956-0398
Japan	**Panasonic Corporation**	1048 Kadoma, Kadoma-shi, Osaka 571-8686, Japan, Tel. +81-6-6908-1050, Fax +81-6-6908-5781, www.panasonic.net
Singapore	**Panasonic Industrial Devices Automation Controls Sales Asia Pacific**	300 Beach Road, #16-01 The Concourse, Singapore 199555, Tel. +65-6390-3811, Fax +65-6390-3810

Copyright © 2014 • Printed in Germany
6105 euen 01/14

Panasonic®