Luckylight

0.31" Quadruple Digit Numeric Displays

Technical Data Sheet

Model No.: KW4-311XVA

sales@prom-elec.com / ООО ПРОМЭЛЕКТРОНИКА

Features:

- 0.31” (inch) digit height.
- Excellent segment uniformity.
- Sold state reliability.
- Industrial standard size.
- Low power consumption.
- The product itself will remain within RoHS compliant Version.

Descriptions:

- The KW4-311XXX series is a lager 8.0mm (0.31”) high seven segments display designed for viewing distances up to 7 meters.
- These displays provide excellent reliability in bright ambient light.
- These devices are made with white segments and gray surface

Applications:

- Audio equipment.
- Instrument panels.
- Digital read out display.

Device Selection Guide:

Model No.	Chip Material	Source Color	Description
KW4-311AVA	AlGaInP	Ultra Red	Common Anode
KW4-311CVA		Ultra Red	Common Cathode

Package Dimension:

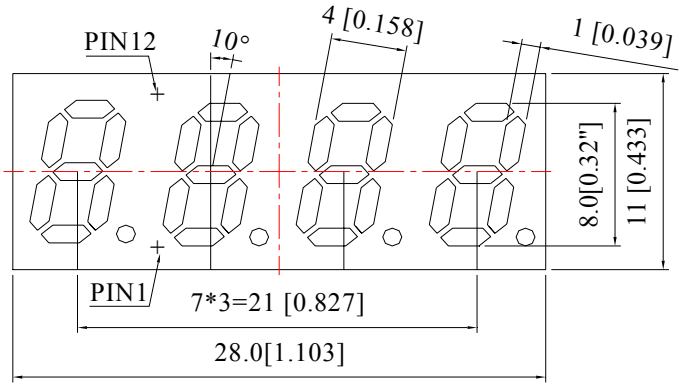

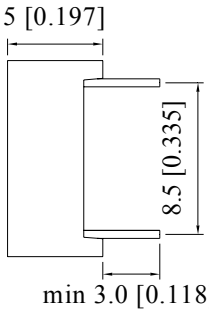

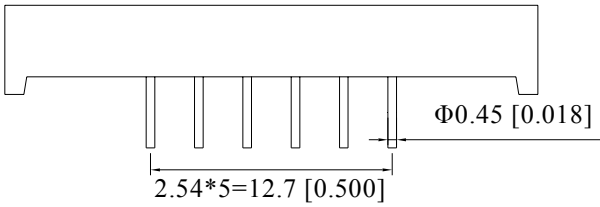

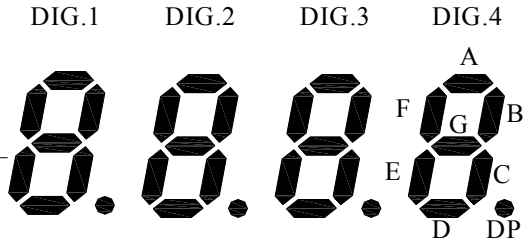

KW4-311AVA

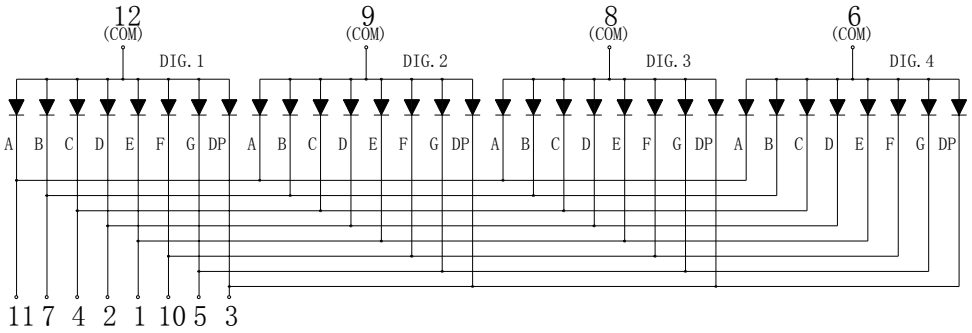

KW4-311CVA

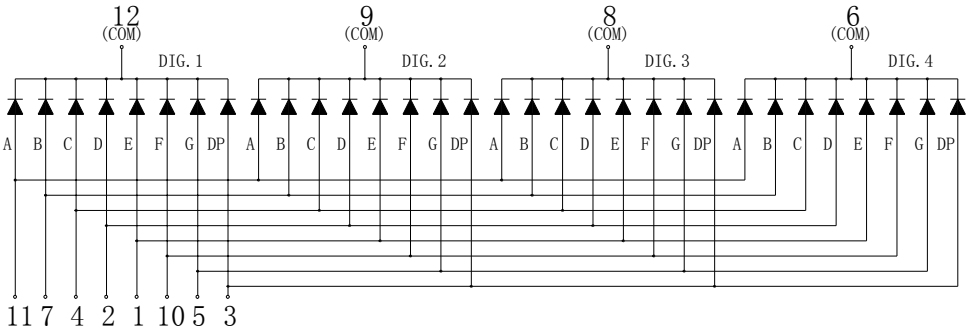

Notes:

1. All dimensions are in millimeters (inches).
2. Tolerance is ±0.25 mm (.010”) unless otherwise noted..
3. Specifications are subject to change without notice.

Absolute Maximum Ratings at Ta=25℃

Parameters	Symbol	Max.	Unit
Power Dissipation Per Segment	PD	65	mW
Peak Forward Current Per Segment (1/10 Duty Cycle, 0.1ms Pulse Width)	IFP	100	mA
Forward Current Per Segment	IF	25	mA
Dating Linear From 50℃		0.4	mA/℃
Reverse Voltage	VR	5	V
Operating Temperature Range	Topr	-40℃ to +80℃	
Storage Temperature Range	Tstg	-40℃ to +85℃	
Soldering Temperature	Tsld	260℃ for 5 Seconds	

Electrical Optical Characteristics at Ta=25℃

Parameters	Symbol	Min.	Typ.	Max.	Unit	Test Condition
Luminous Intensity	Iv	10.0	20.0	---	mcd	IF=20mA (Note 1)
Luminous Intensity Matching Ratio (Segment To Segment)	I_{v-m}	---	---	2:1		IF=10mA
Peak Emission Wavelength	λp	---	632	---	nm	IF=20mA
Dominant Wavelength	λd	---	624	---	nm	IF=20mA (Note 2)
Spectral Line Half-Width	△λ	---	20	---	nm	IF=20mA
Forward Voltage	VF	---	2.0	2.6	V	IF=20mA
Reverse Current	IR	---	---	50	μA	VR=5V

Notes:

1. Luminous intensity is measured with a light sensor and filter combination that approximates the CIE eye-response curve.
2. The dominant wavelength (λd) is derived from the CIE chromaticity diagram and represents the single wavelength which defines the color of the device.

Typical Electrical / Optical Characteristics Curves
(25℃ Ambient Temperature Unless Otherwise Noted)

Spectrum Distribution

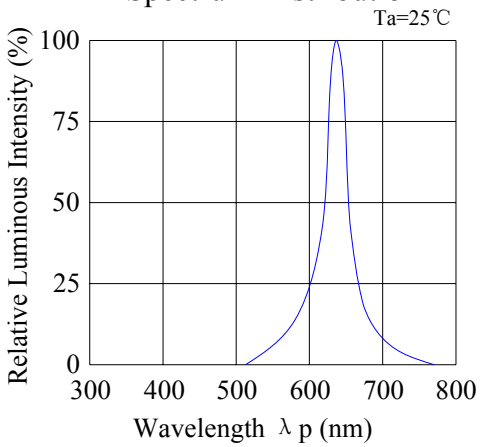

Forward Current & Forward Voltage

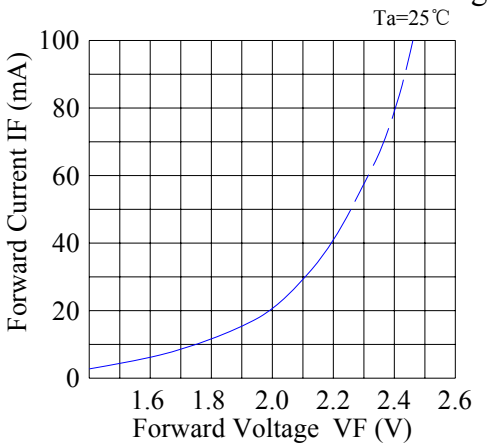

Luminous Intensity & Ambient Temperature

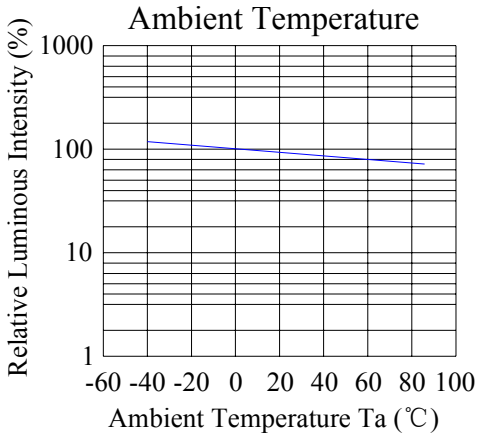

Luminous Intensity & Forward Current

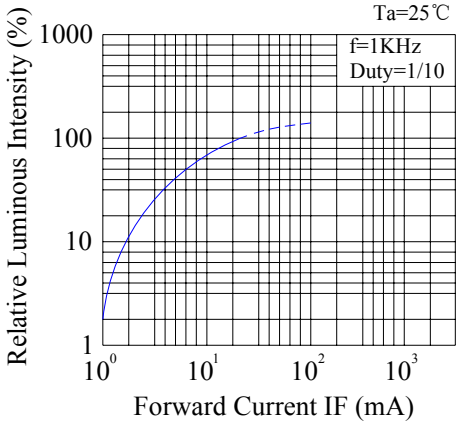

Forward Current Derating Curve

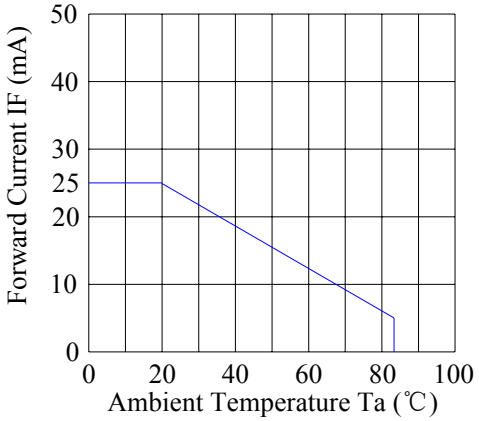

Please read the following notes before using the datasheets:

1. Over-current-proof

Customer must apply resistors for protection, otherwise slight voltage shift will cause big current change (Burn out will happen).

2. Storage

2.1 Do not open moisture proof bag before the products are ready to use.

2.2 Before opening the package, the LEDs should be kept at 30℃ or less and 90%RH or less.

2.3 The LEDs should be used within a year.

2.4 After opening the package, the LEDs should be kept at 30℃ or less and 70%RH or less.

3. Soldering Condition

3.1 Pb-free solder temperature profile.

3.2 Reflow soldering should not be done more than two times.

4. Soldering Iron

Each terminal is to go to the tip of soldering iron temperature less than 260℃ for 5 seconds within once in less than the soldering iron capacity 25W. Leave two seconds and more intervals, and do soldering of each terminal. Be careful because the damage of the product is often started at the time of the hand solder.

5. Repairing

Repair should not be done after the LEDs have been soldered. When repairing is unavoidable, a double-head soldering iron should be used. It should be confirmed beforehand whether the characteristics of the LEDs will or will not be damaged by repairing.