ALPHA & OMEGA SEMICONDUCTOR

AON7422G

30V N-Channel MOSFET

General Description

- Low $R_{DS(ON)}$
- Optimized for Load Switch
- High Current Capability
- ESD Protected
- RoHS and Halogen-Free Compliant

Applications

- Battery Charging & Discharging for NB Battery Pack

Product Summary

V_{DS}	30V
I_D (at V_{GS}=10V)	32A
$R_{DS(ON)}$ (at V_{GS}=10V)	< 4.6mΩ
$R_{DS(ON)}$ (at V_{GS}=4.5V)	< 7.2mΩ
Typical ESD protection	**HBM Class 2**

100% UIS Tested
100% Rg Tested

Green Product

DFN 3x3 EP

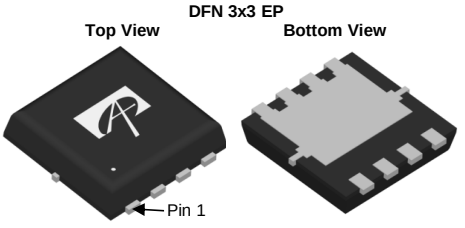

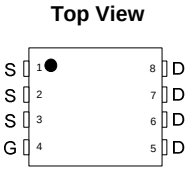

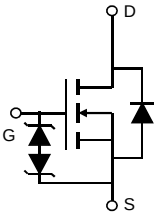

Orderable Part Number	Package Type	Form	Minimum Order Quantity
AON7422G	DFN 3x3 EP	Tape & Reel	5000

Absolute Maximum Ratings T_A=25°C unless otherwise noted

Parameter		Symbol	Maximum	Units
Drain-Source Voltage		V_{DS}	30	V
Gate-Source Voltage		V_{GS}	±20	V
Continuous Drain Current [G]	T_C=25°C	I_D	32	A
	T_C=100°C		32	
Pulsed Drain Current [C]		I_{DM}	118	
Continuous Drain Current	T_A=25°C	I_{DSM}	25	A
	T_A=70°C		20	
Avalanche Current [C]		I_{AS}	30	A
Avalanche energy	L=0.1mH [C]	E_{AS}	45	mJ
V_{DS} Spike	10µs	V_{SPIKE}	36	V
Power Dissipation [B]	T_C=25°C	P_D	28	W
	T_C=100°C		11	
Power Dissipation [A]	T_A=25°C	P_{DSM}	5	W
	T_A=70°C		3.2	
Junction and Storage Temperature Range		T_J, T_{STG}	-55 to 150	°C

Thermal Characteristics

Parameter		Symbol	Typ	Max	Units
Maximum Junction-to-Ambient [A]	t ≤ 10s	$R_{\theta JA}$	20	25	°C/W
Maximum Junction-to-Ambient [A D]	Steady-State		45	55	°C/W
Maximum Junction-to-Case	Steady-State	$R_{\theta JC}$	3.7	4.5	°C/W

sales@prom-elec.com / ООО ПРОМЭЛЕКТРОНИКА

Electrical Characteristics (T_J=25°C unless otherwise noted)

Symbol	Parameter	Conditions	Min	Typ	Max	Units
STATIC PARAMETERS						
BV_{DSS}	Drain-Source Breakdown Voltage	I_D=250µA, V_{GS}=0V	33			V
I_{DSS}	Zero Gate Voltage Drain Current	V_{DS}=30V, V_{GS}=0V			1	µA
		T_J=55°C			5	
I_{GSS}	Gate-Body leakage current	V_{DS}=0V, V_{GS}=±20V			±10	µA
$V_{GS(th)}$	Gate Threshold Voltage	V_{DS}=V_{GS}, I_D=250µA	1.3	1.85	2.4	V
$R_{DS(ON)}$	Static Drain-Source On-Resistance	V_{GS}=10V, I_D=20A		3.8	4.6	mΩ
		T_J=125°C		5.6	6.8	
		V_{GS}=4.5V, I_D=20A		5.2	7.2	mΩ
g_{FS}	Forward Transconductance	V_{DS}=5V, I_D=20A		100		S
V_{SD}	Diode Forward Voltage	I_S=1A, V_{GS}=0V		0.7	1	V
I_S	Maximum Body-Diode Continuous Current				30	A
DYNAMIC PARAMETERS						
C_{iss}	Input Capacitance	V_{GS}=0V, V_{DS}=15V, f=1MHz		2300		pF
C_{oss}	Output Capacitance			240		pF
C_{rss}	Reverse Transfer Capacitance			210		pF
R_g	Gate resistance	f=1MHz	1.2	2.5	4	Ω
SWITCHING PARAMETERS						
Q_g(10V)	Total Gate Charge	V_{GS}=10V, V_{DS}=15V, I_D=20A		38	60	nC
Q_g(4.5V)	Total Gate Charge			20	30	nC
Q_{gs}	Gate Source Charge			6		nC
Q_{gd}	Gate Drain Charge			12		nC
$t_{D(on)}$	Turn-On DelayTime	V_{GS}=10V, V_{DS}=15V, R_L=0.75Ω, R_{GEN}=3Ω		7		ns
t_r	Turn-On Rise Time			9		ns
$t_{D(off)}$	Turn-Off DelayTime			40		ns
t_f	Turn-Off Fall Time			11		ns
t_{rr}	Body Diode Reverse Recovery Time	I_F=20A, di/dt=500A/µs		11		ns
Q_{rr}	Body Diode Reverse Recovery Charge	I_F=20A, di/dt=500A/µs		15		nC

A. The value of $R_{\theta JA}$ is measured with the device mounted on 1in^2 FR-4 board with 2oz. Copper, in a still air environment with T_A =25° C. The Power dissipation P_{DSM} is based on $R_{\theta JA}$ t≤ 10s and the maximum allowed junction temperature of 150° C. The value in any given application depends on the user's specific board design.
B. The power dissipation P_D is based on $T_{J(MAX)}$=150° C, using junction-to-case thermal resistance, and is more useful in setting the upper dissipation limit for cases where additional heatsinking is used.
C. Single pulse width limited by junction temperature $T_{J(MAX)}$=150° C.
D. The $R_{\theta JA}$ is the sum of the thermal impedance from junction to case $R_{\theta JC}$ and case to ambient.
E. The static characteristics in Figures 1 to 6 are obtained using <300µs pulses, duty cycle 0.5% max.
F. These curves are based on the junction-to-case thermal impedance which is measured with the device mounted to a large heatsink, assuming a maximum junction temperature of $T_{J(MAX)}$=150° C. The SOA curve provides a single pulse rating.
G. The maximum current rating is package limited.
H. These tests are performed with the device mounted on 1 in^2 FR-4 board with 2oz. Copper, in a still air environment with T_A=25° C.

APPLICATIONS OR USE AS CRITICAL COMPONENTS IN LIFE SUPPORT DEVICES OR SYSTEMS ARE NOT AUTHORIZED. AOS DOES NOT ASSUME ANY LIABILITY ARISING OUT OF SUCH APPLICATIONS OR USES OF ITS PRODUCTS. AOS RESERVES THE RIGHT TO IMPROVE PRODUCT DESIGN,FUNCTIONS AND RELIABILITY WITHOUT NOTICE.

TYPICAL ELECTRICAL AND THERMAL CHARACTERISTICS

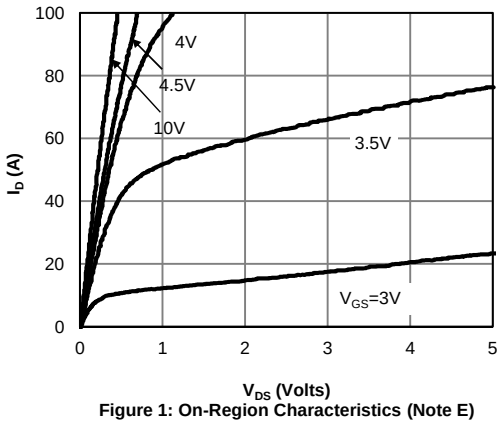

Figure 1: On-Region Characteristics (Note E)

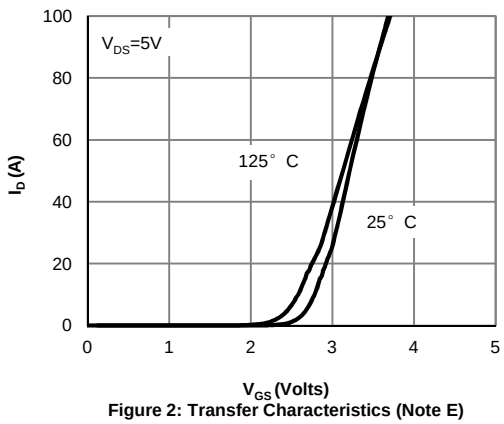

Figure 2: Transfer Characteristics (Note E)

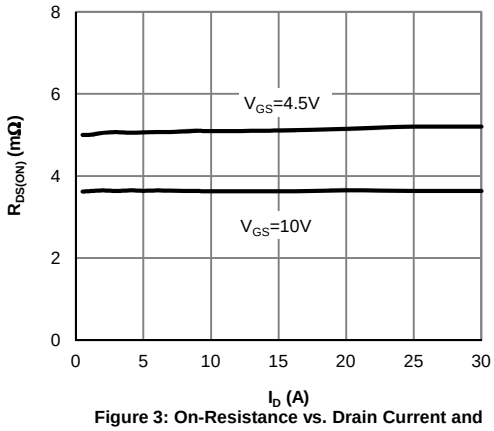

Figure 3: On-Resistance vs. Drain Current and Gate Voltage (Note E)

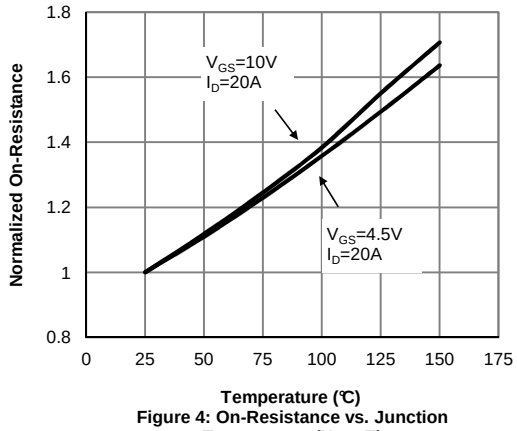

Figure 4: On-Resistance vs. Junction Temperature (Note E)

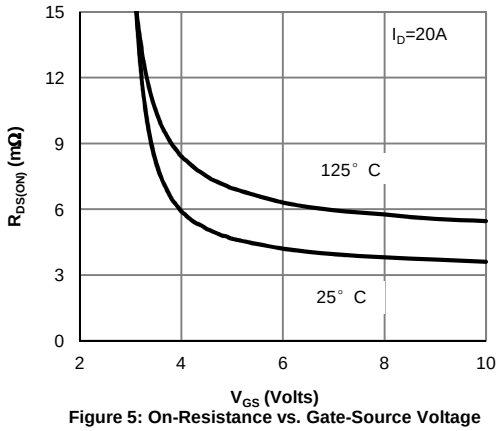

Figure 5: On-Resistance vs. Gate-Source Voltage (Note E)

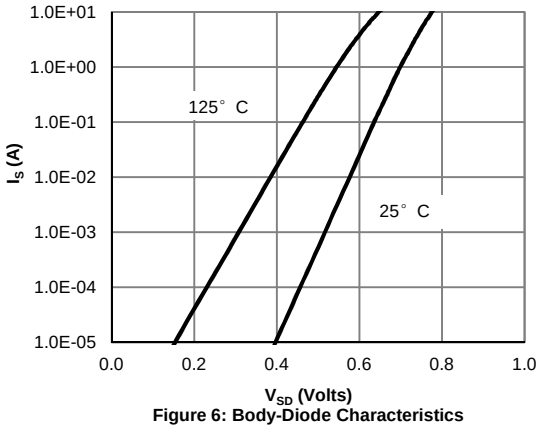

Figure 6: Body-Diode Characteristics (Note E)

TYPICAL ELECTRICAL AND THERMAL CHARACTERISTICS

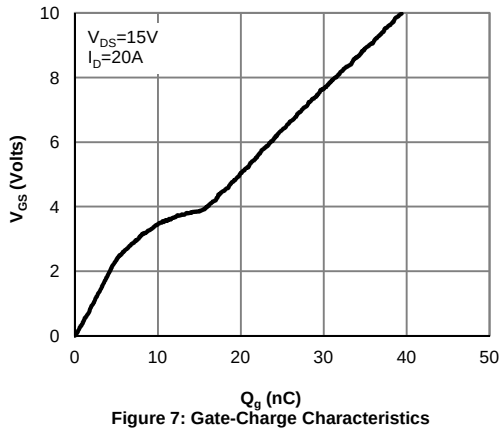

Figure 7: Gate-Charge Characteristics

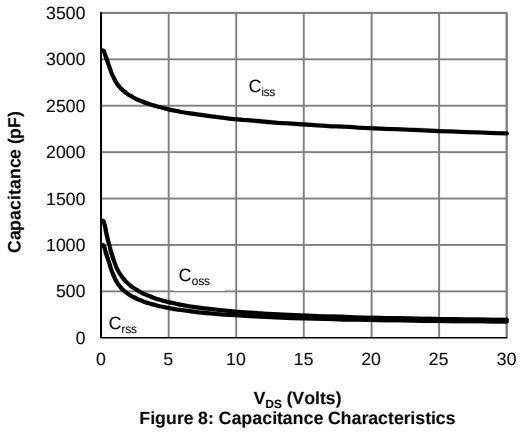

Figure 8: Capacitance Characteristics

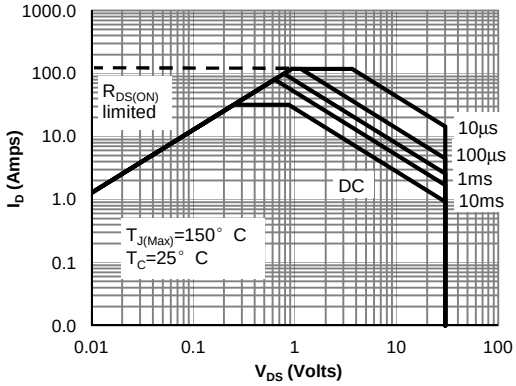

V_{GS}> or equal to 4.5V
Figure 9: Maximum Forward Biased Safe Operating Area (Note F)

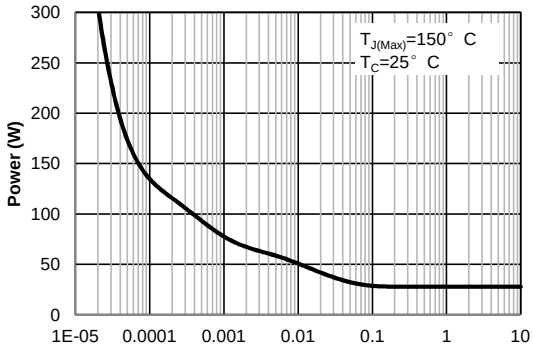

Figure 10: Single Pulse Power Rating Junction-to-Case (Note F)

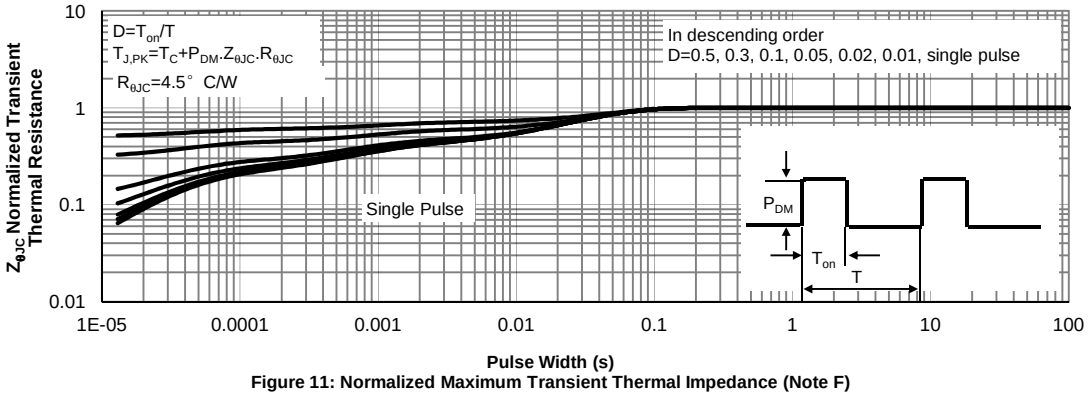

Figure 11: Normalized Maximum Transient Thermal Impedance (Note F)

TYPICAL ELECTRICAL AND THERMAL CHARACTERISTICS

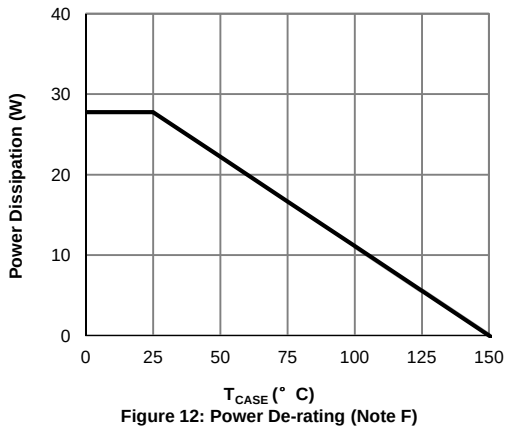

Figure 12: Power De-rating (Note F)

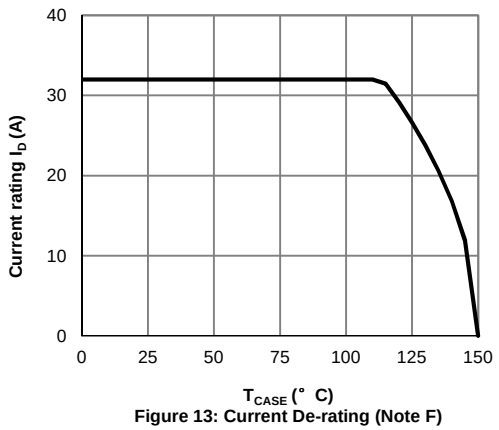

Figure 13: Current De-rating (Note F)

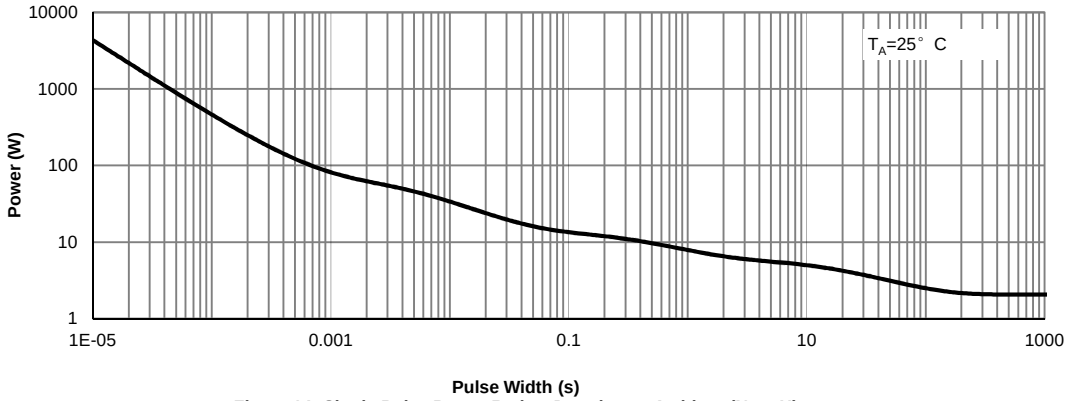

Figure 14: Single Pulse Power Rating Junction-to-Ambient (Note H)

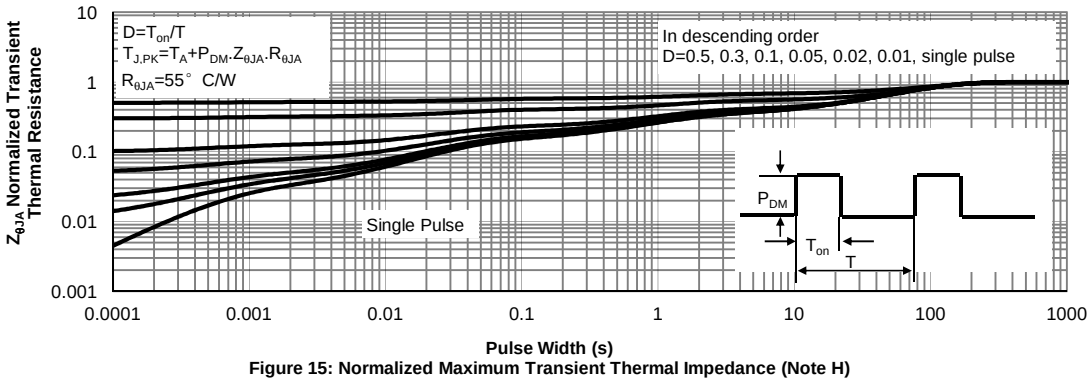

Figure 15: Normalized Maximum Transient Thermal Impedance (Note H)

Figure A: Gate Charge Test Circuit & Waveforms

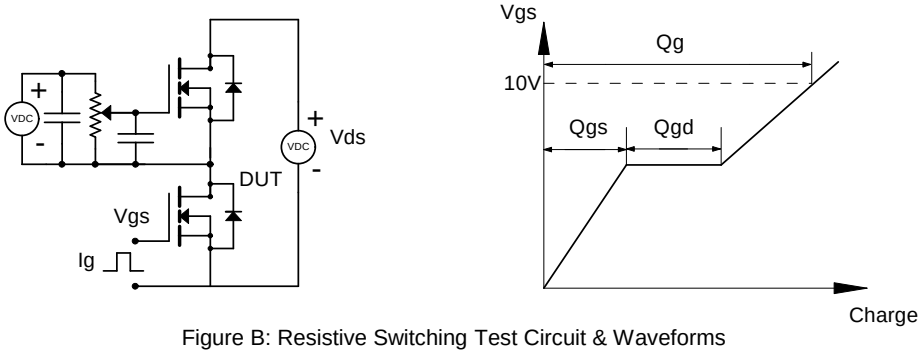

Figure B: Resistive Switching Test Circuit & Waveforms

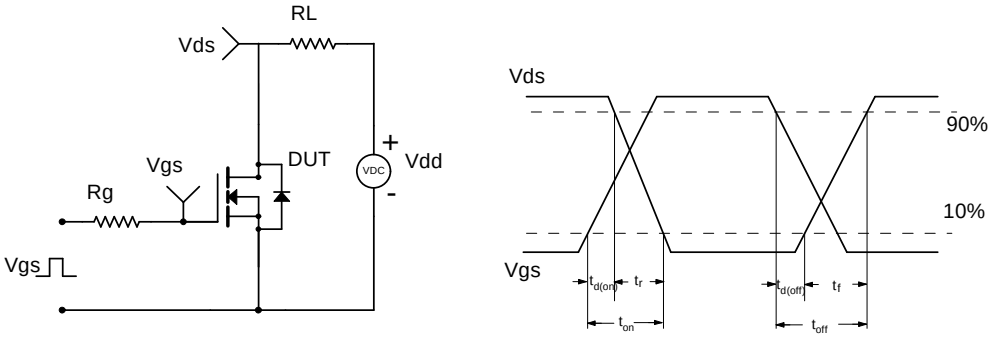

Figure C: Unclamped Inductive Switching (UIS) Test Circuit & Waveforms

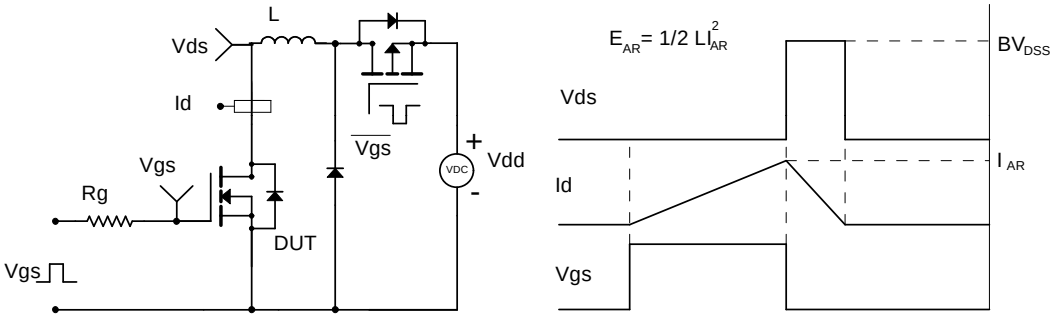
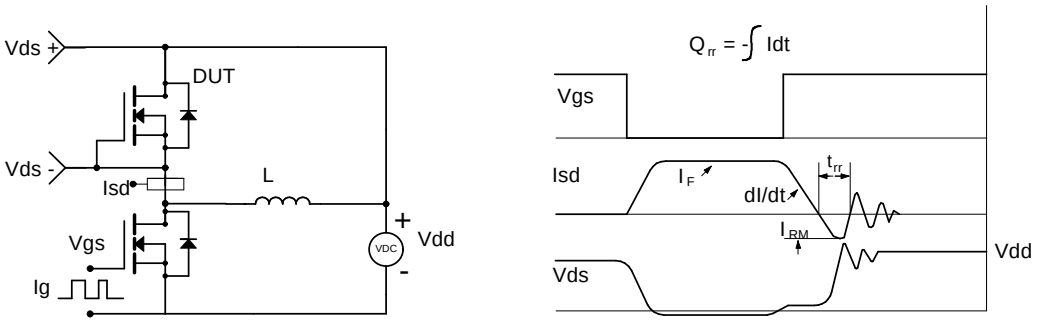
Figure D: Diode Recovery Test Circuit & Waveforms