SPECIFICATION FOR APPROVAL

業務部

TO: TME

PART NAME	EMI FILTER	YUNPEN SAMPLE NO	FTB-6181
YUNPEN MODEL	YR06A3	SAMPLE DATE	OCT.30.2015
MODEL NO		OUR DRAWING NO	DR-00475

1. PHYSICAL DIMENSIONS:(mm)

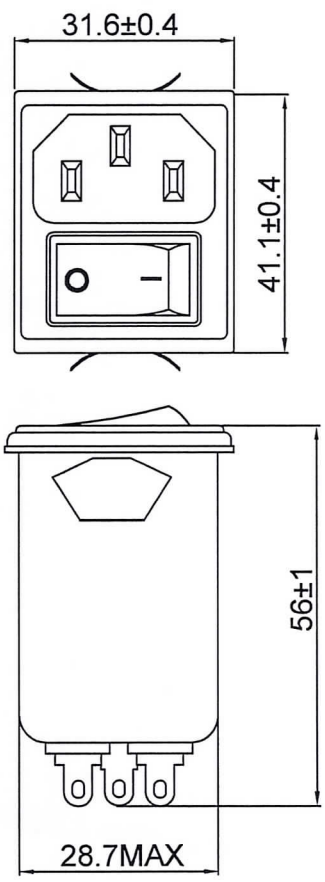

SUGGESTED CUTOUT MOUNTING DIMENSIONS OF SOCKET

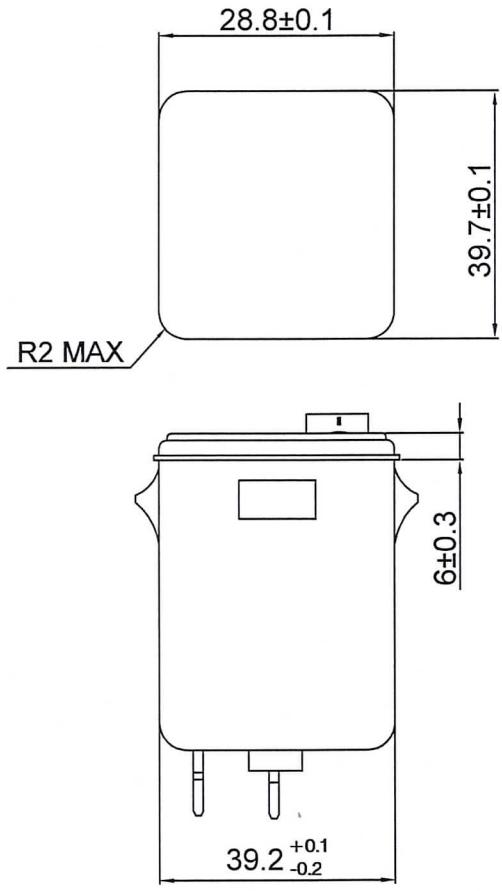

2. SCHEMATIC:

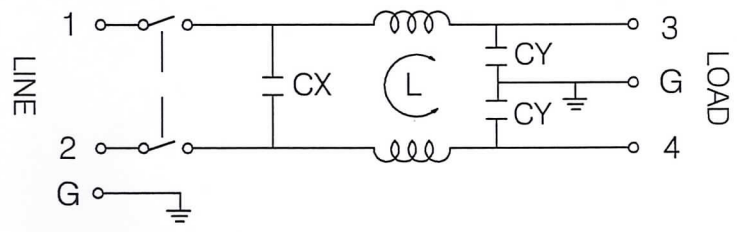

CX : 0.1uF
CY : 3300pF
L : 2X0.7mH

REPORTED BY	CHECKED BY	APPROVED BY	3	
工程部 10. 30 王張省		資材 王敬莉	2	
			REV. 1	

CK002 30101

YUNPEN ELECTRONIC CO.,LTD

3F., No.32, Zhongxing Rd., Xizhi Dist., New Taipei City 221, Taiwan (R.O.C.)

TEL:(02)2647-1327 FAX:(02)2647-1329 http://www.yunpen.com.tw

E-mail: sales@yunpen.com.tw

sales@prom-elec.com / ООО ПРОМЭЛЕКТРОНИКА

SPECIFICATION FOR APPROVAL

業務部

TO: TME

PART NAME	EMI FILTER	YUNPEN SAMPLE NO	FTB-6181
YUNPEN MODEL	YR06A3	SAMPLE DATE	OCT.30.2015
MODEL NO		OUR DRAWING NO	DR-00475

3.ELECTRICAL CHARACTERISTICS:

3-1.RATED VOLTAGE ····· **125/250VAC**
3-2.RATED CURRENT ····· **6 A**
3-3.OPERATING FREQUENCY ····· **50/60Hz**
3-4.LEAKAGE CURRENT:EACH LINE TO GROUND
250VAC 50Hz ····· **0.8mA MAX**
3-5.HIPOT RATING.(FOR ONE MINUTE)
LINE TO LINE ····· **1450VDC**
LINE TO GROUND ····· **1800VAC**
3-6.INSULATION RESISTANCE ····· **250VDC/100MOHM MIN**
3-7.DIRECT CURRENT RESISTANCE ····· **0.15 OHM MAX**
3-8.OPERATING TEMPERATURE ····· **-25 TO +85°C**

4..SAFETY COMPLIANCE:

UL FILE NO:E134751
VDE FILE NO:40028561
CQC FILE NO:12001067993
CE

REPORTED BY	CHECKED BY	APPROVED BY	3	
工程部 10. 30 王張賓		江敬新	2	
			REV. 1	

CK002 30101

YUNPEN ELECTRONIC CO.,LTD
3F., No.32, Zhongxing Rd., Xizhi Dist., New Taipei City 221, Taiwan (R.O.C.)
TEL:(02)2647-1327 FAX:(02)2647-1329 http://www.yunpen.com.tw
E-mail: sales@yunpen.com.tw