MOSFET Driver Selector Guide

A Leading Provider of Smart, Connected and Secure Embedded Control Solutions

SMART | CONNECTED | SECURE

MOSFET Driver Selector Guide

Rev A2 07/15/2020

What kind of Application are you using this driver for?

Automotive

Commercial

Motor Drive

MICROCHIP

Automotive Drivers

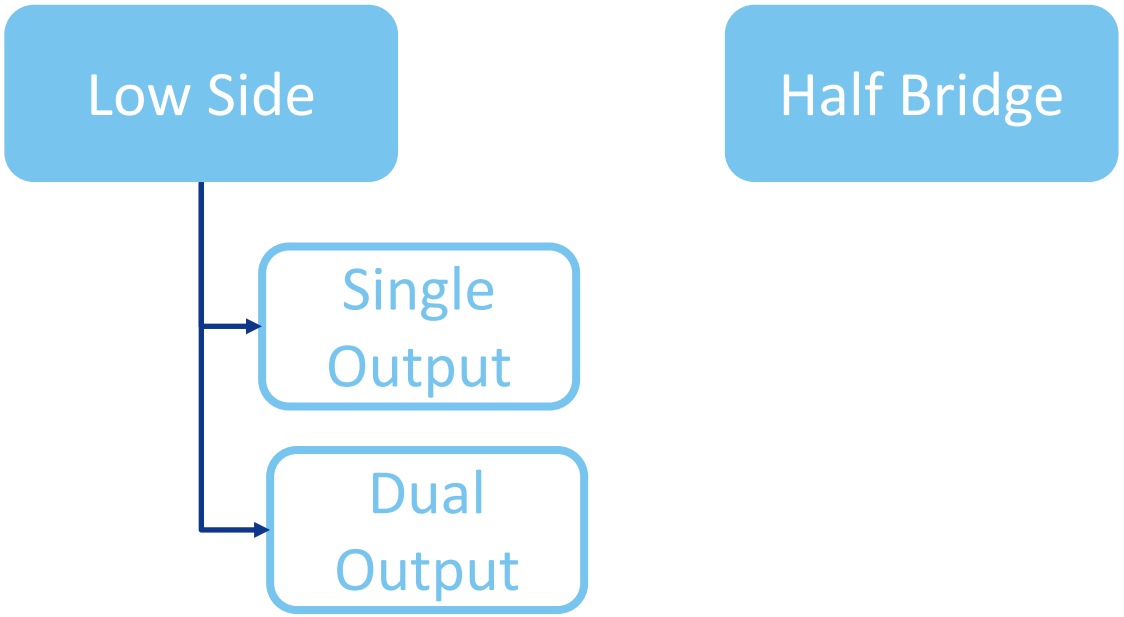

<< BACK

Automotive Single Output

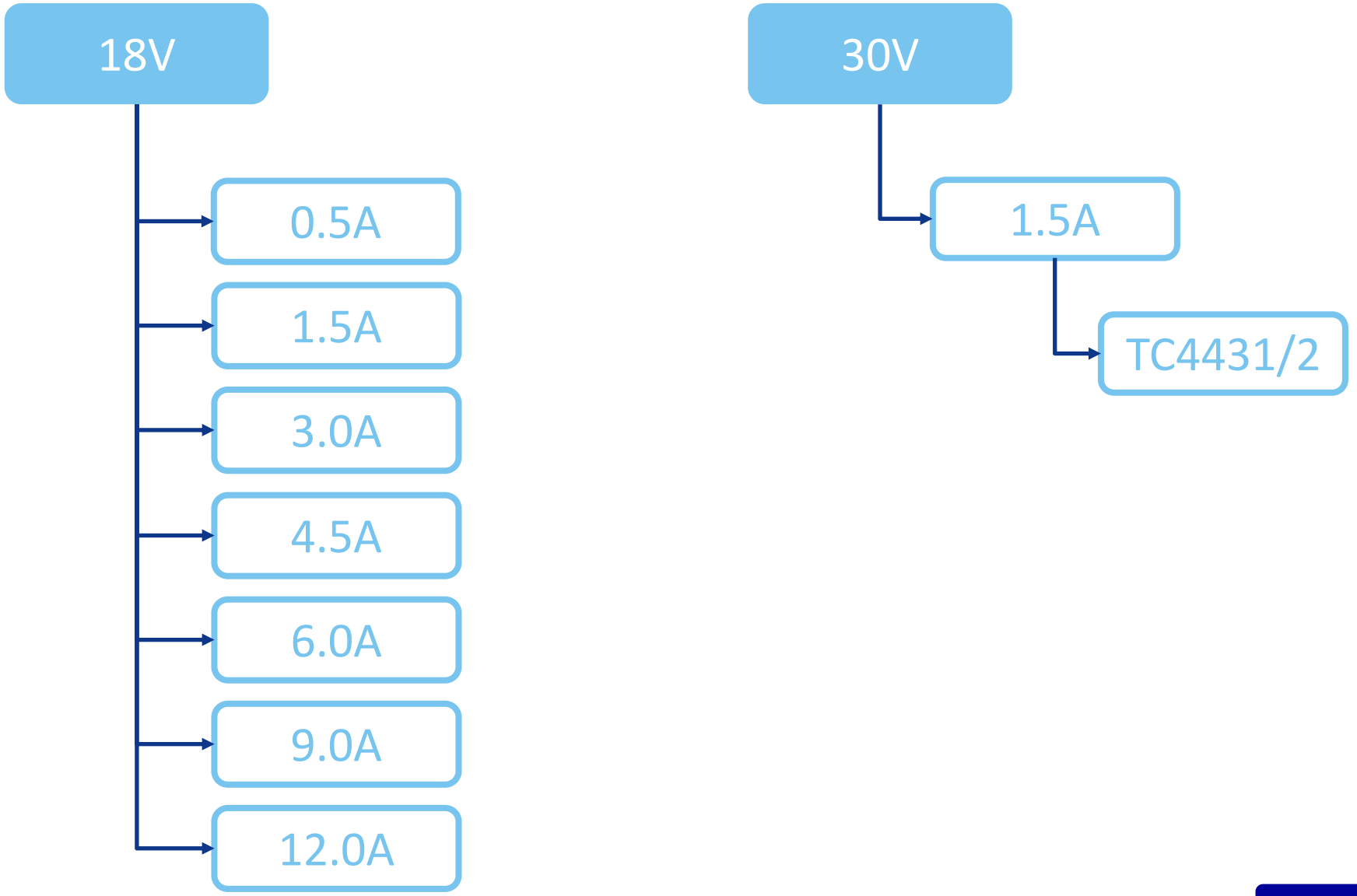

<< BACK

Automotive Single 0.5A Output

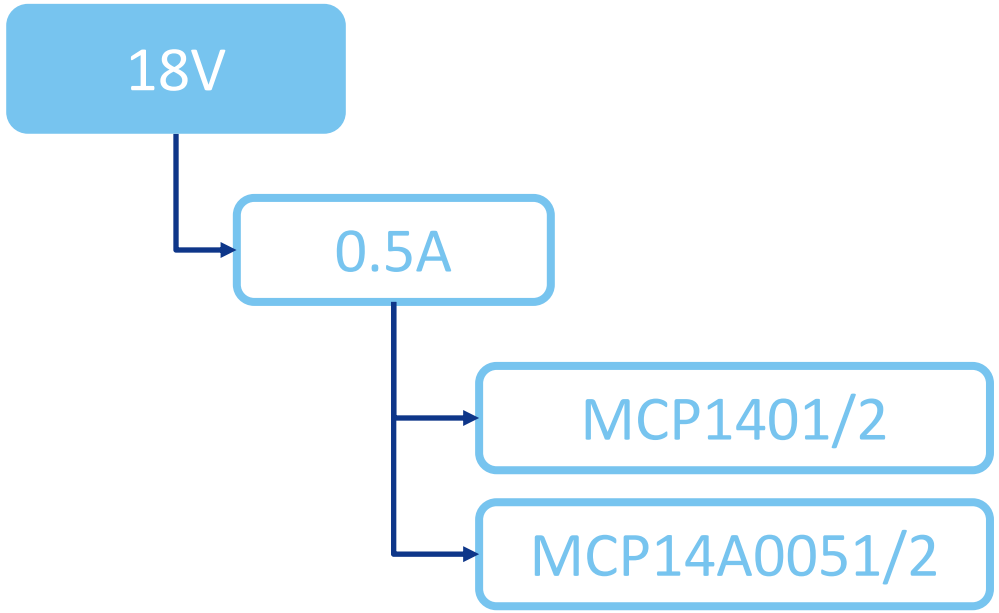

<< BACK

Automotive Single 1.5A Output

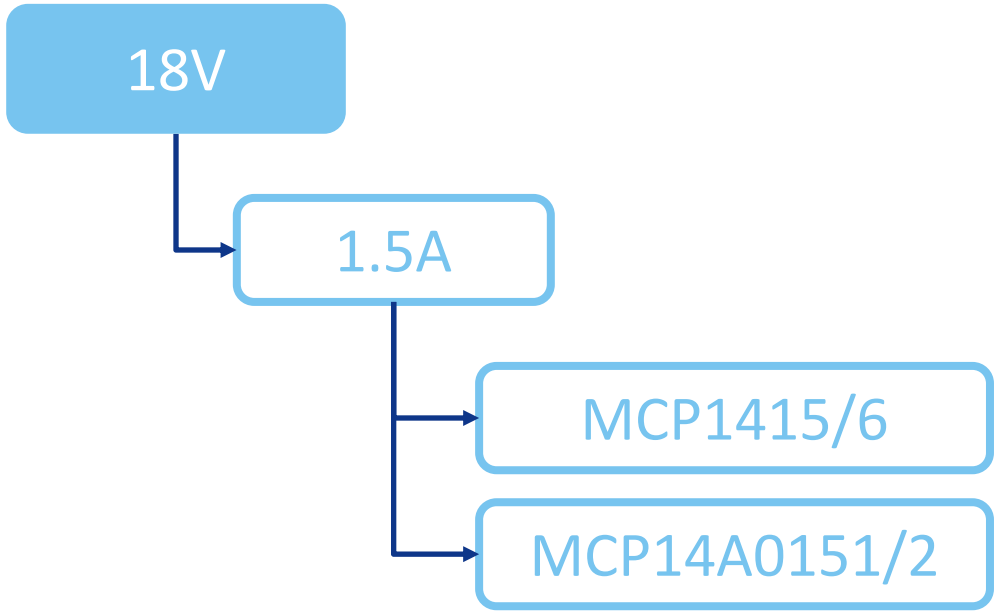

<< BACK

MICROCHIP

Automotive Single 3.0A Output

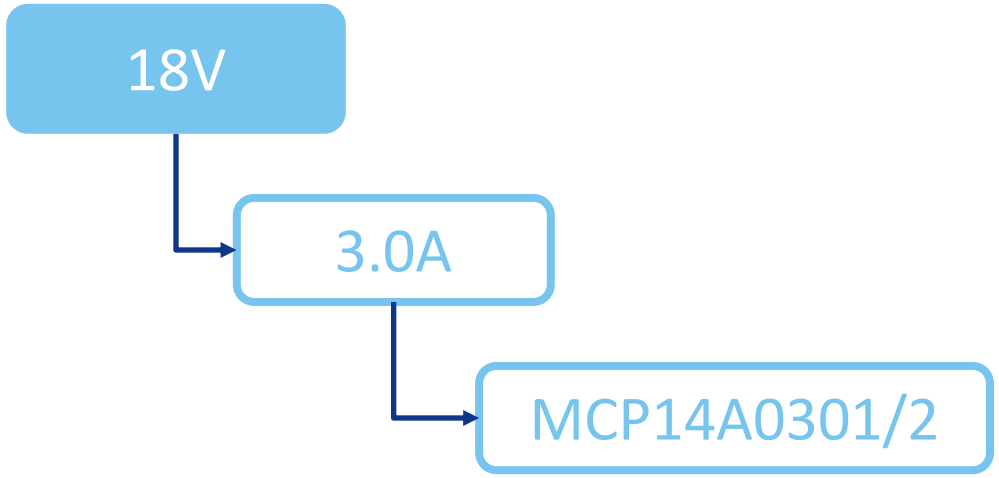

<< BACK

Automotive Single 4.5A Output

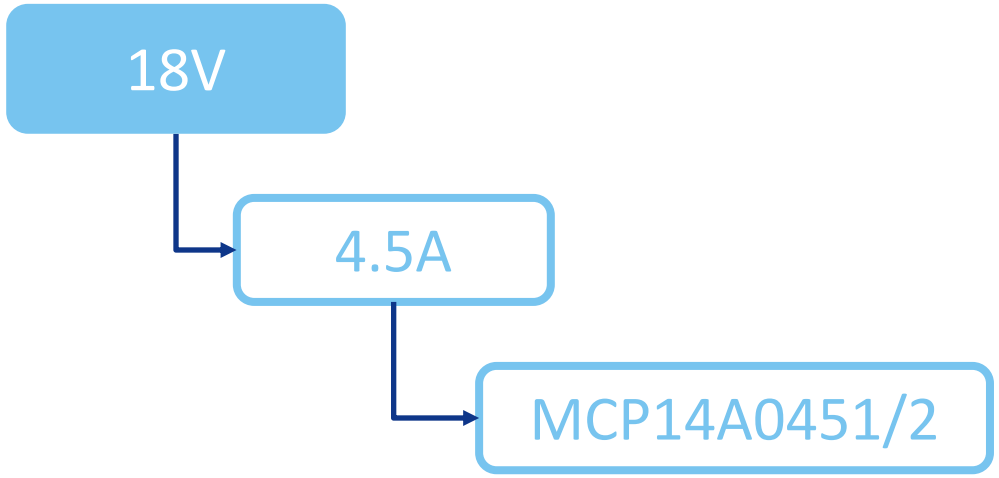

<< BACK

Automotive Single 6.0A Output

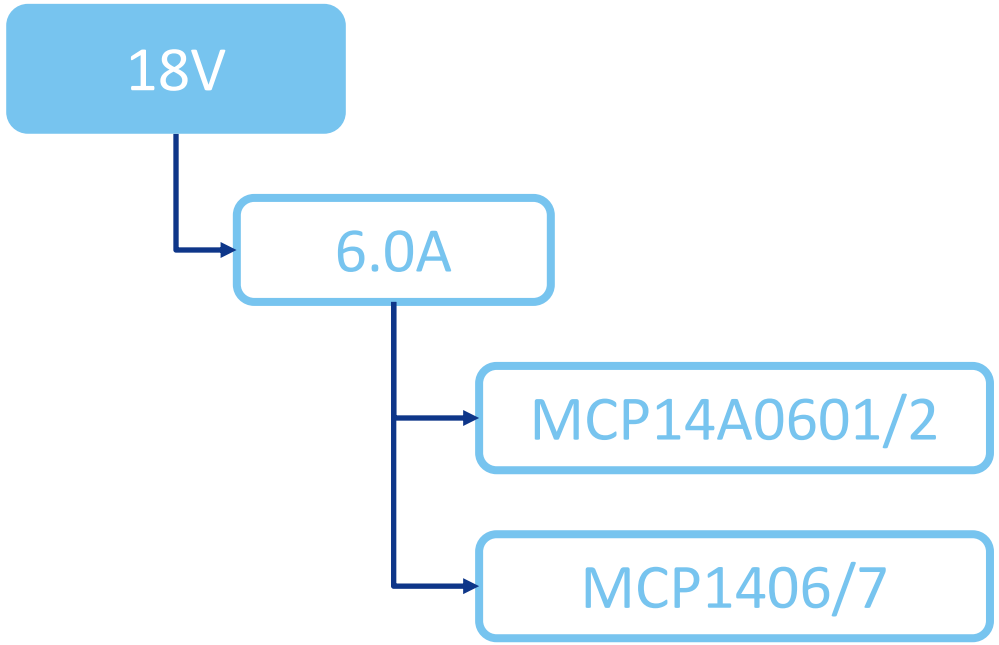

<< BACK

MICROCHIP

Automotive Single 9.0A Output

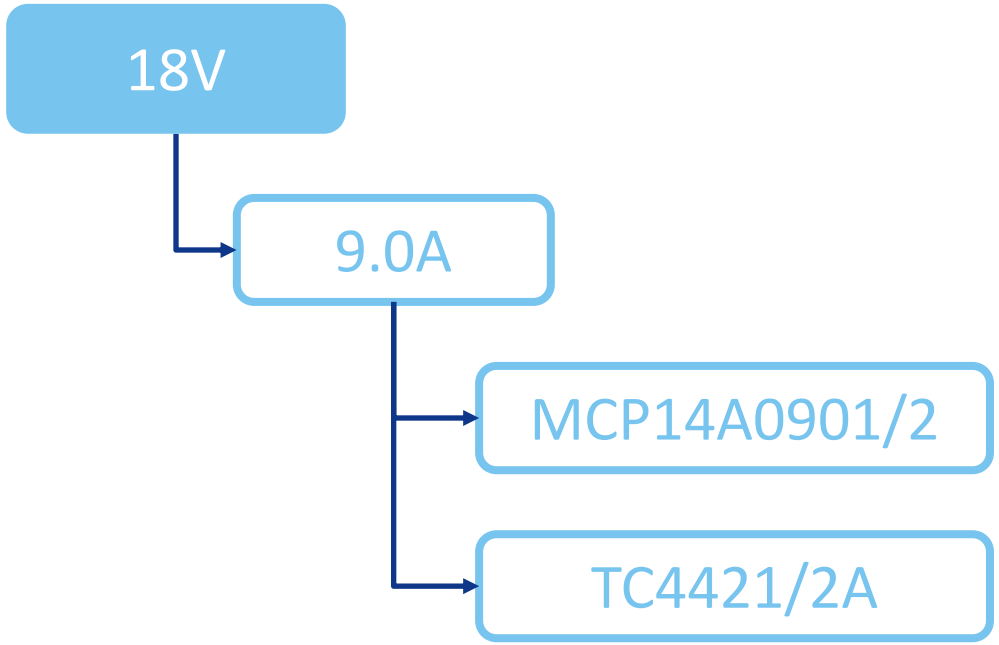

<< BACK

Automotive Single 12.0A Output

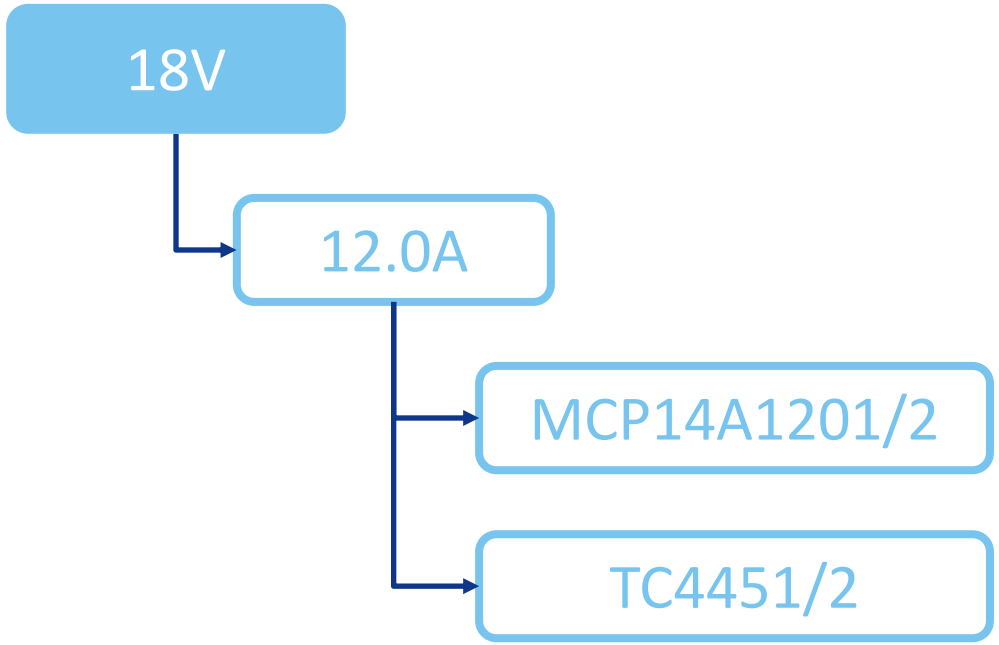

<< BACK

MICROCHIP

Automotive Half Bridge Driver

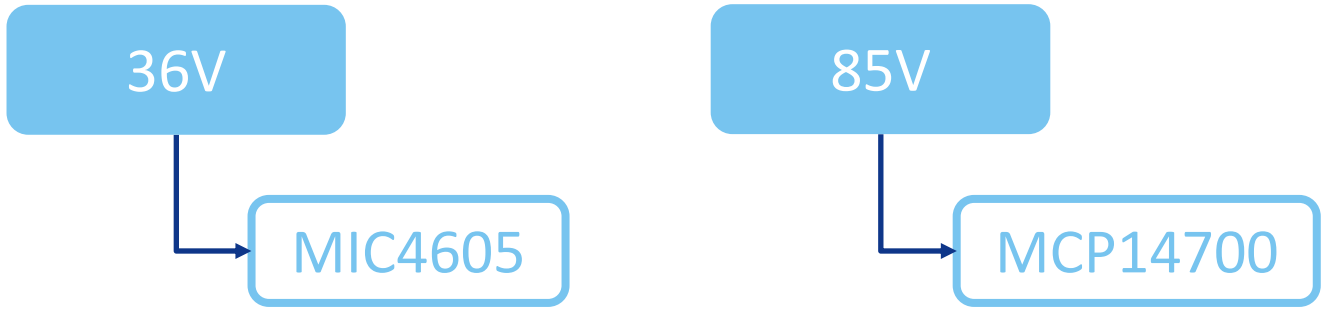

<< BACK

Automotive Dual Output

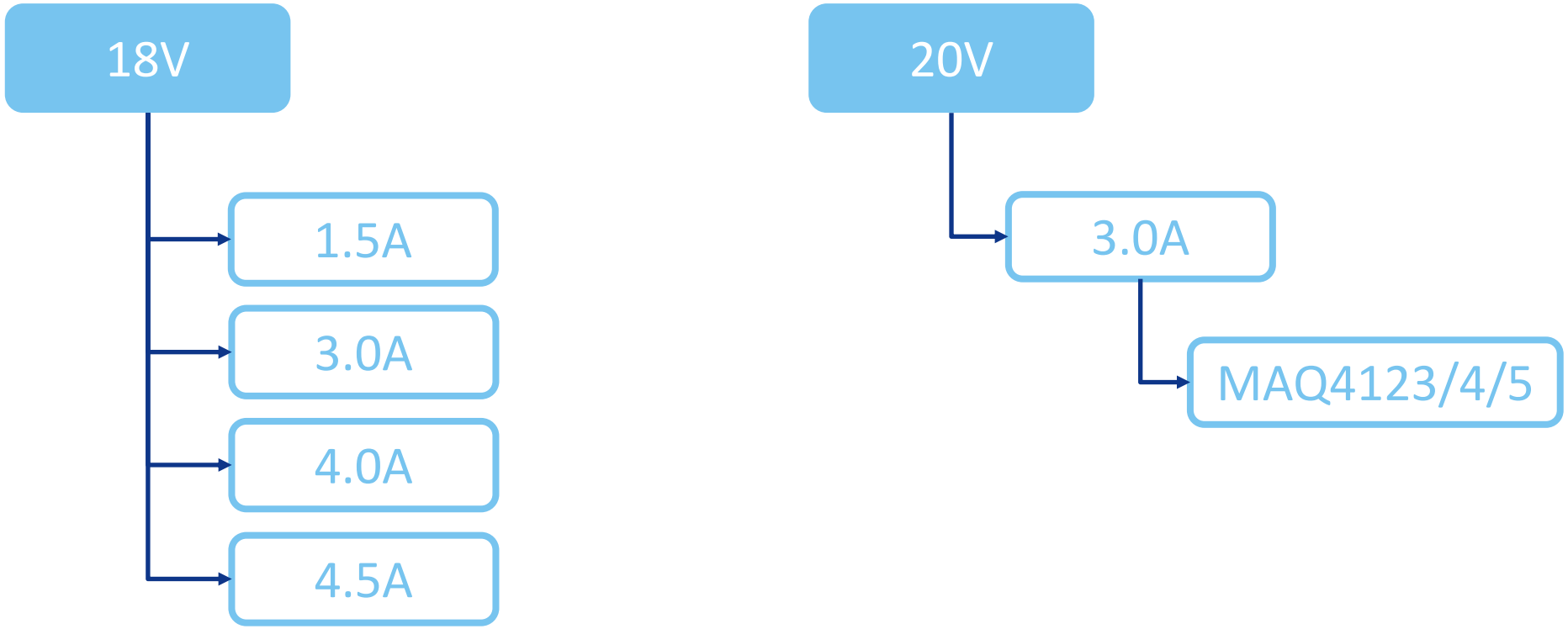

<< BACK

Automotive Dual 1.5A Output

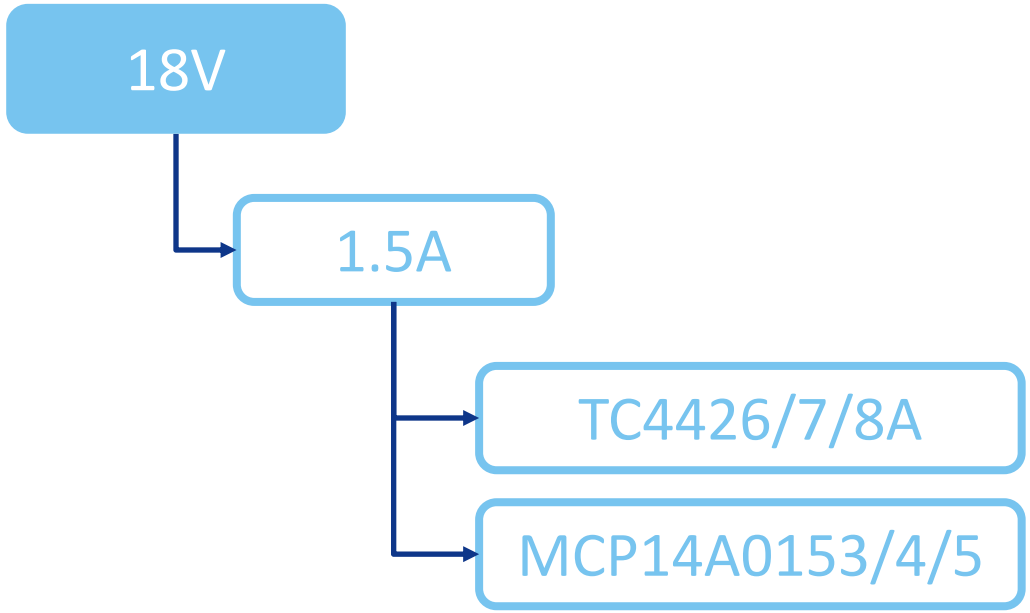

<< BACK

Automotive Dual 3.0A Output

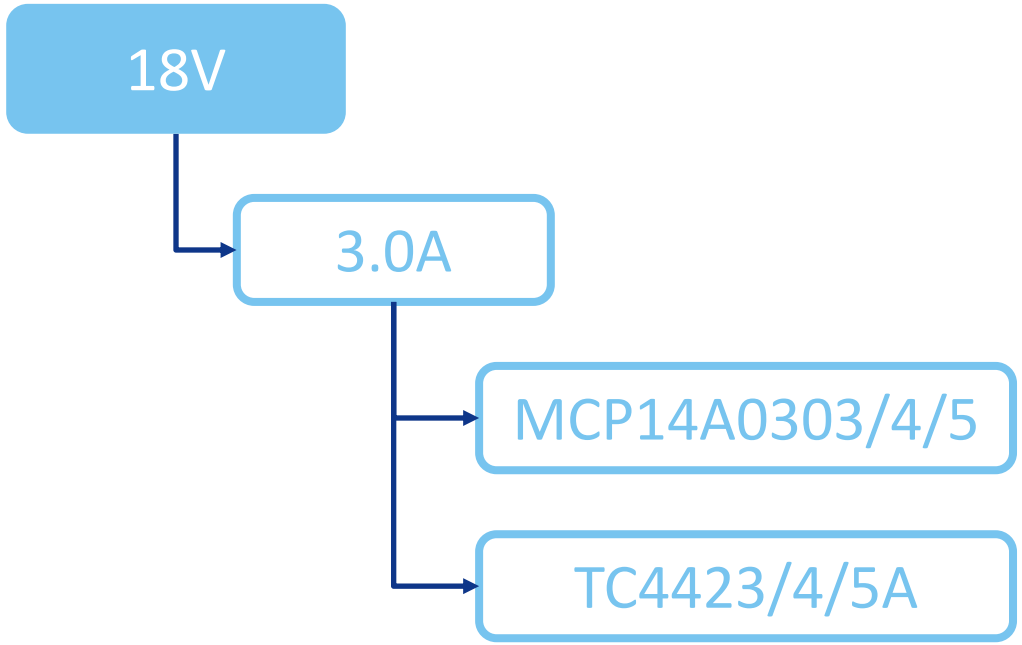

<< BACK

MICROCHIP

Automotive Dual 4.0A Output

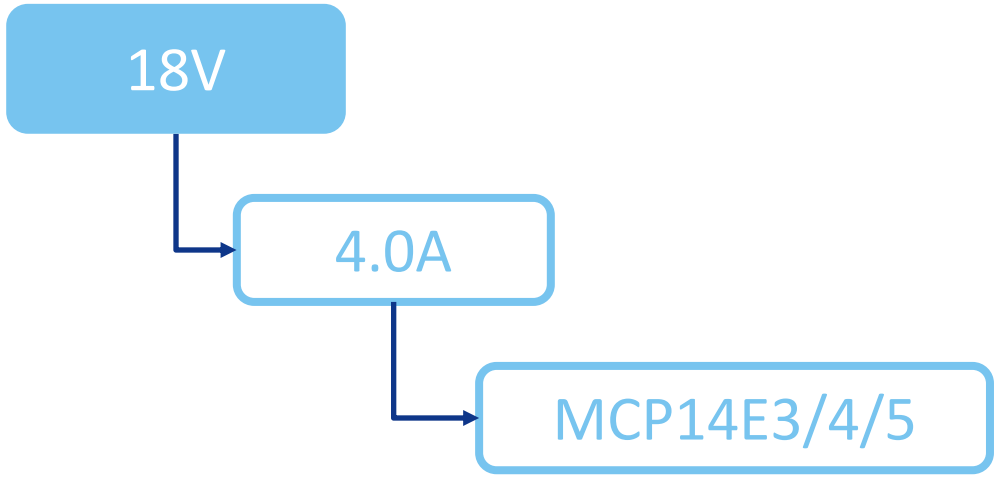

<< BACK

MICROCHIP

Automotive Dual 4.5A Output

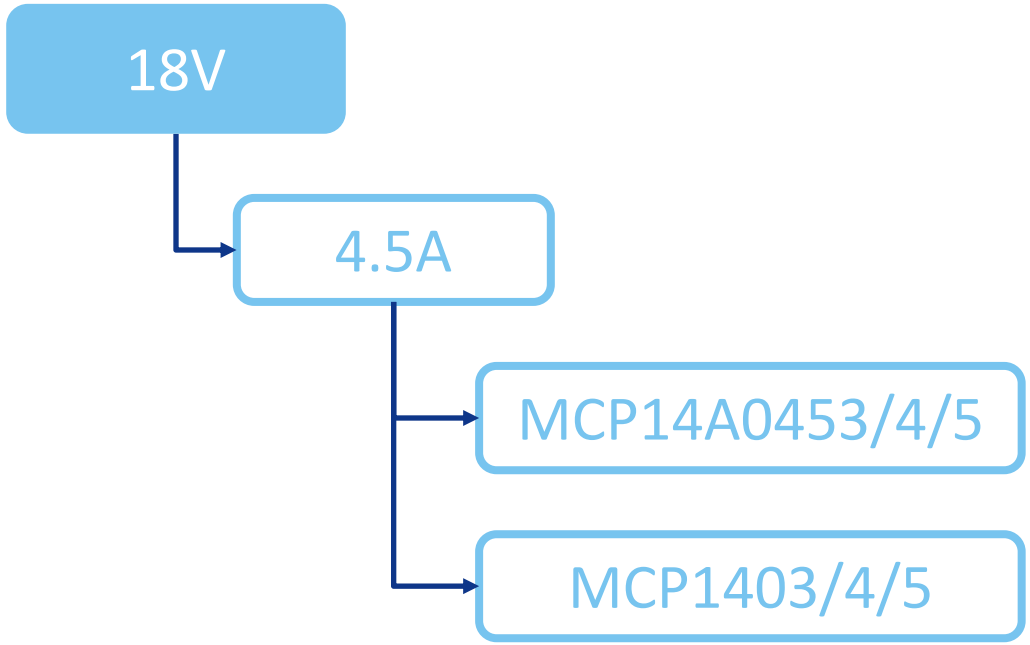

<< BACK

MICROCHIP

Commercial Drivers

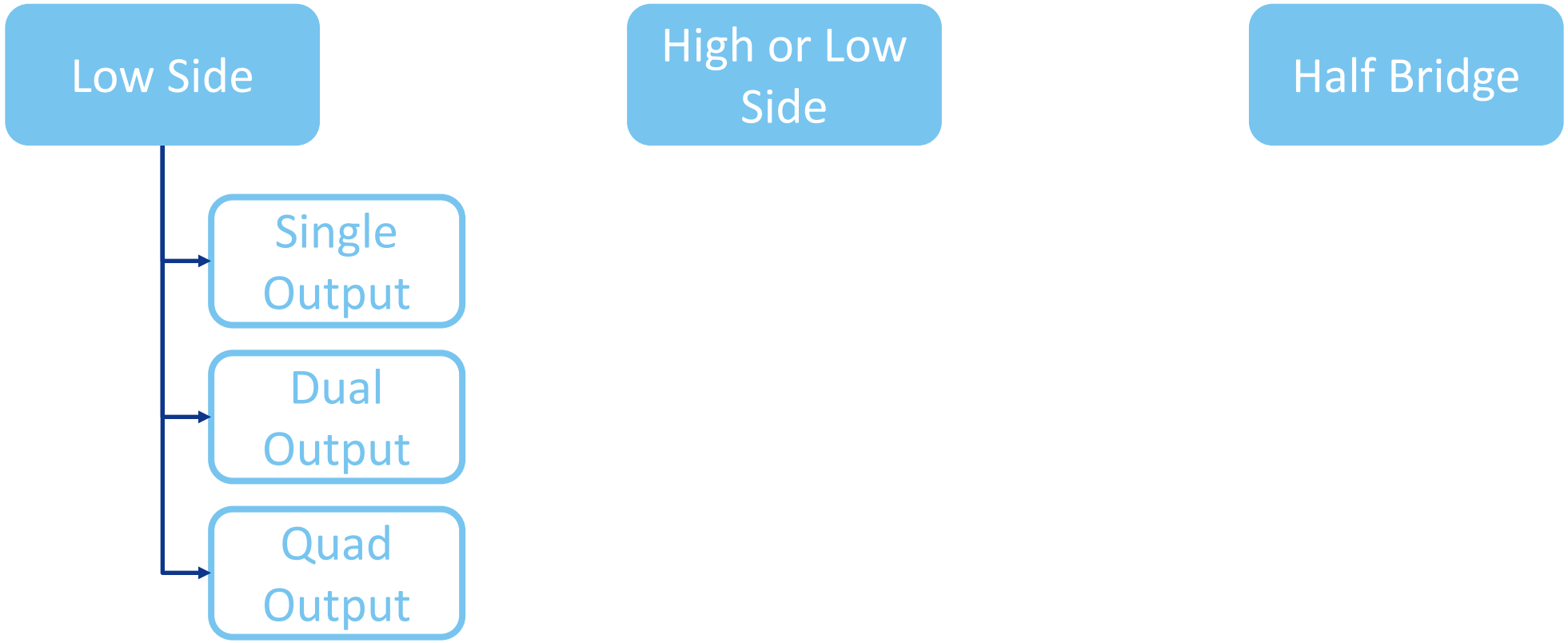

<< BACK

Commercial Low Side Single Output

- 6V
  - 2A
    - TC4626/7
- 13V
  - 6A
    - MIC44F18/9/20
- 20V
  - 6A
    - MIC4120/9
- 16V
  - TC1410N
  - TC1411N
  - TC1412N
  - TC1413N
- 18V
  - MIC4416/7
  - MIC4414/5
  - MIC4420/9
  - MIC4421/2A
  - MIC4451/2
- 50V
  - MIC5020

<< BACK

Commercial Low Side Dual Output

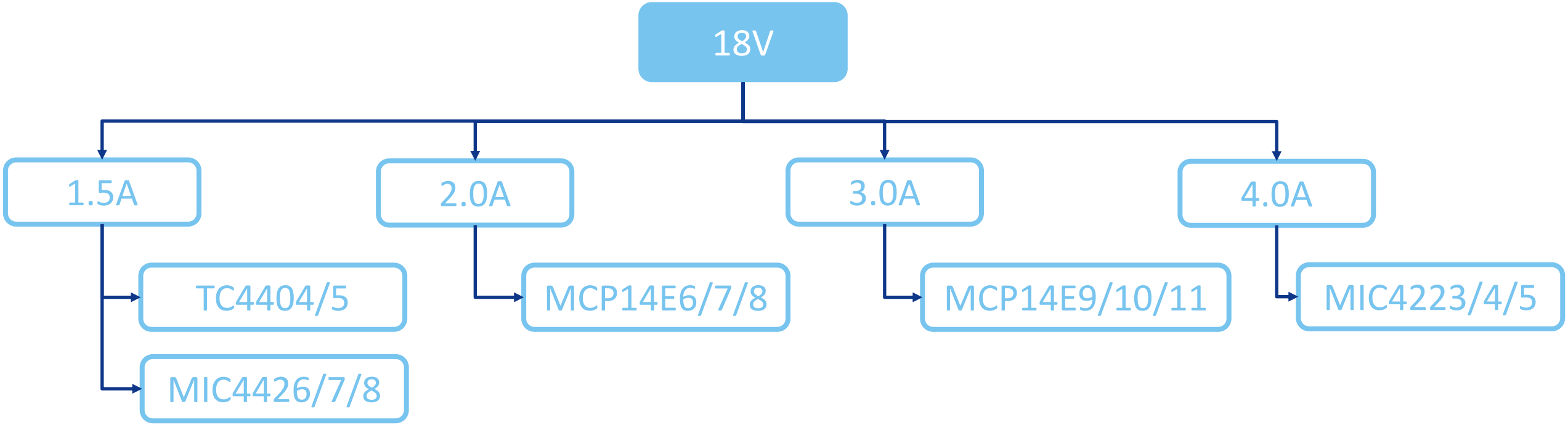

<< BACK

Commercial Low Side Quad Output

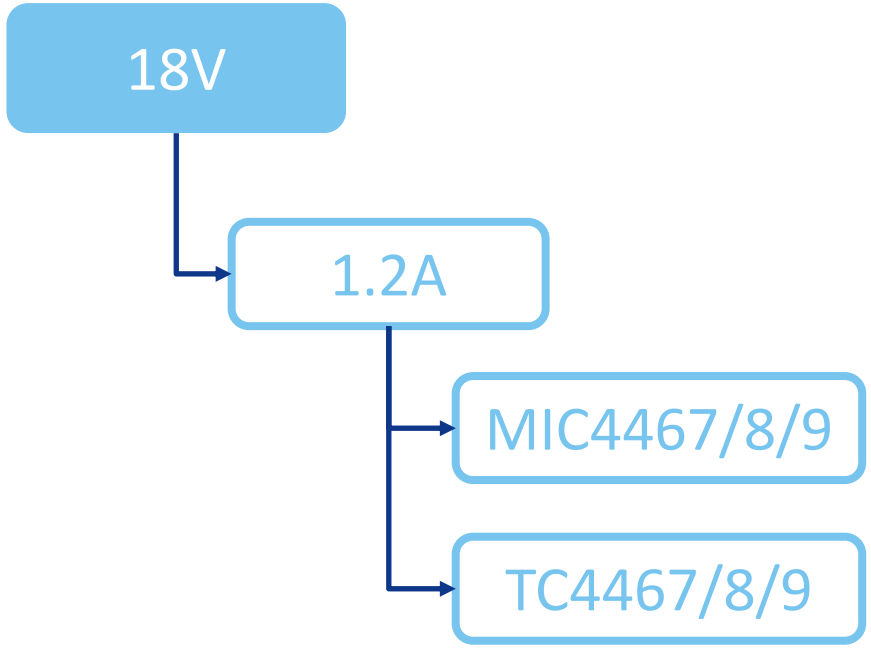

<< BACK

Commercial High/Low Side Drivers

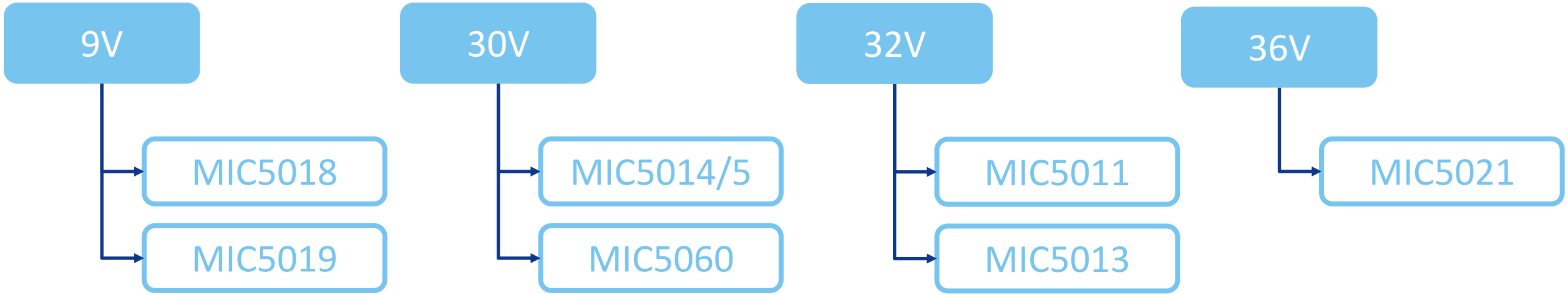

<< BACK

Commercial Half Bridge Drivers

- 28V
  - MIC4600
- 36V
  - MCP14628
- 85V
  - MIC4604
- 100V
  - MIC4100/1
  - MIC4102
  - MIC4103/4

<< BACK

Motor Drivers

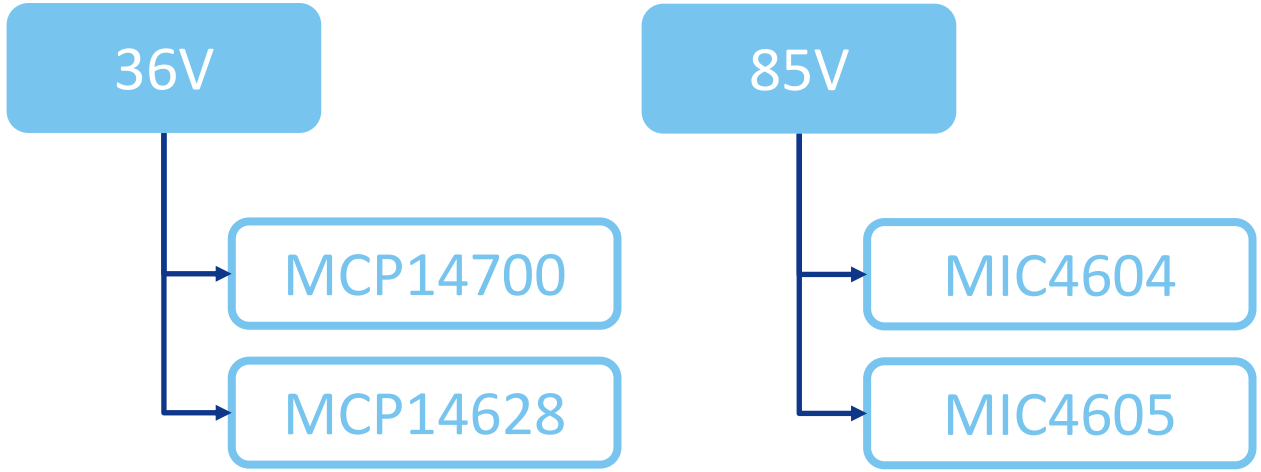

<< BACK

MICROCHIP

MIC5020

Current-Sensing Low-Side MOSFET Driver

Online Datasheet

Features:

- 11V to 50V operation
- 175ns rise/fall time driving 2000pF
- TTL compatible input with internal pull –
  - down resistor
- Overcurrent limit
- Fault output indication
- Gate to source protection
- Compatible with current sensing –
  - MOSFETs

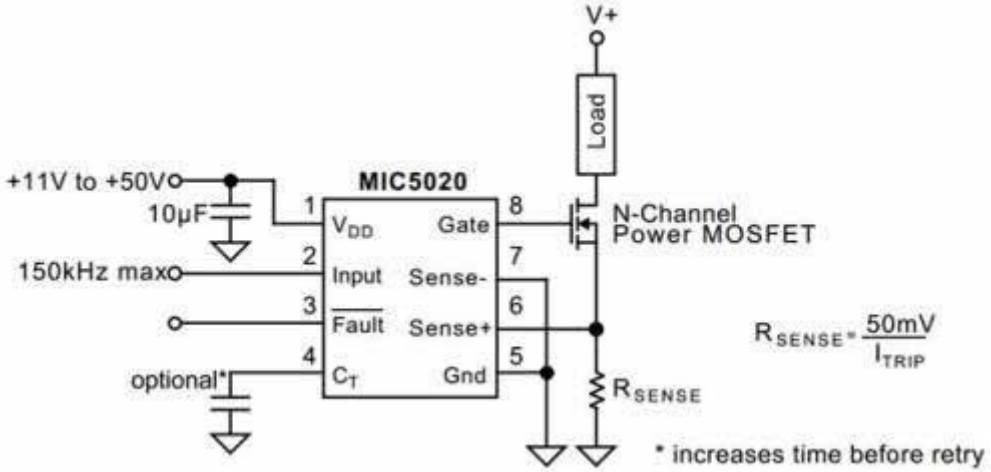

<< BACK

MICROCHIP

TC4431/2

1.5A High-Speed 30V MOSFET Drivers

Recommended for Automotive Designs

Online Datasheet

Features:

- High Peak Output Current: 1.5A
- Wide Operating Range: 4.5V to 30V
- High Capacitive Load Drive –
  - Capability: 1000pF in 25ns
- Short Delay Times: < 78ns (typ.)
- Low Supply Current:
  - With Logic ‘1’ Input: 2.5mA
  - With Logic ‘0’ Input: 300µA
- Low Output Impedance: 7Ω (typ.)
- Latch-Up Protected: Will Withstand -
  - > 300mA Reverse Current
- ESD Protected: 4kV
- Recommended for Automotive Design (TC4431)

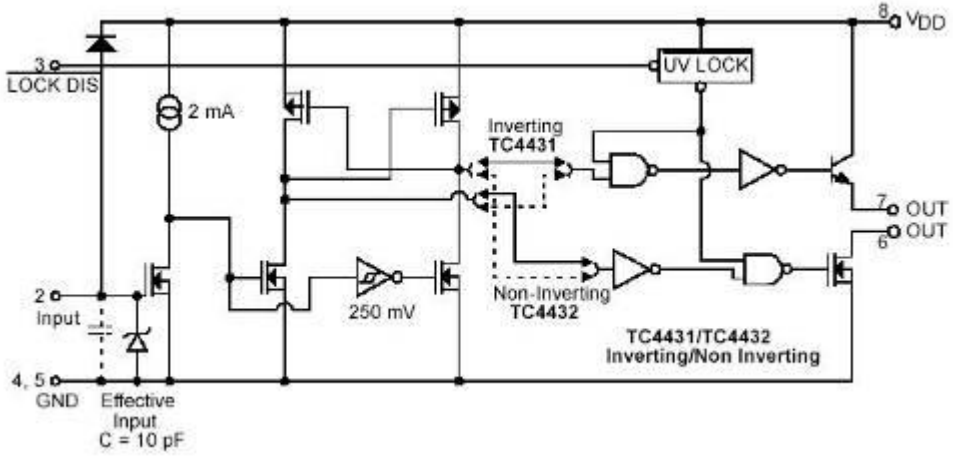

<< BACK

MICROCHIP

MIC4120/9

6A-Peak Low-Side MOSFET Driver Bipolar/CMOS/DMOS Process

Online Datasheet

Features:

- Latch-up protected: will withstand >200mA –
  - reverse output current
- Logic input withstands negative swing of up to 5V
- Matched rise and fall times of 25ns
- High peak output current at 6A
- Wide operating range from 4.5V to 20V
- High capacitive load drive of 10,000pF
- Logic high input for any voltage from 2.4V to VS
- Low equivalent input capacitance (typ) at 6pF
- Low supply current is 450µA with logic 1 input
- Low output impedance is 2.5Ω
- Output voltage swing within 25mV of ground or VS
- Exposed backside pad packaging reduces heat
  - ePad SOIC-8L (θJA = 58°C/W)
  - 3mm x 3mm MLF®-8L (θJA = 60°C/W)

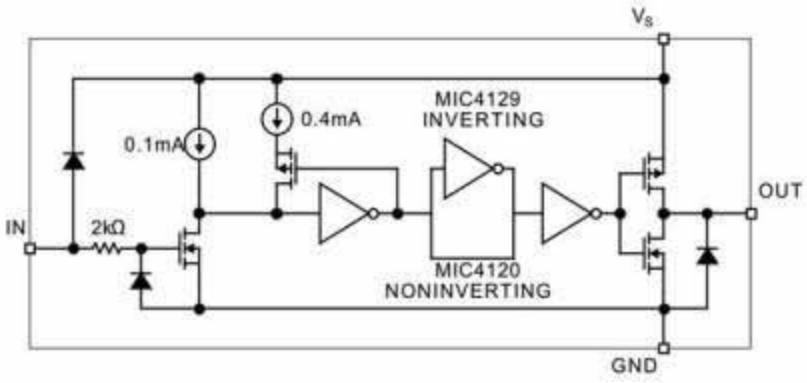

<< BACK

MCP14A1201/2

Description Sub-Title of the Device

Online Datasheet

Features List:

- High Peak Output Current: 12.0A (typical)
- Wide Input Supply Voltage Operating Range:
  - 4.5V to 18V
- Low Shoot-Through/Cross-Conduction Current in Output Stage
- High Capacitive Load Drive Capability:
  - 15,000 pF in 25 ns (typical)
- Short Delay Times: 28 ns (tD1), 28 ns (tD2) (typical)
- Low Supply Current: 360 µA (typical)
- Low-Voltage Threshold Input and Enable with Hysteresis
- Latch-Up Protected: Withstands 500 mA Reverse Current
- Space-Saving Packages:
  - 8-Lead MSOP
  - 8-Lead SOIC
  - 8-Lead 2 x 3 TDFN

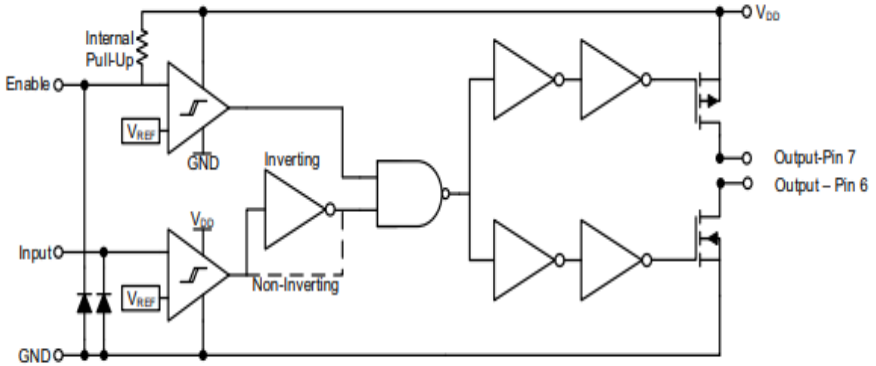

MCP14A1201 Inverting
MCP14A1202 Noninverting

<< BACK

MIC4451/2

12A Peak Low-Side MOSFET Driver Bipolar/CMOS/DMOS Process

Online Datasheet

Features:

- BiCMOS/DMOS construction
- Latch-up proof: fully isolated process is –
  - inherently immune to any latch-up.
- Input will withstand negative swing of –
  - up to 5V
- Matched rise and fall times 25ns
- High peak output current 12A peak
- Wide operating range 4.5V to 18V
- High capacitive load drive 62,000pF
- Low delay time 30ns typ.
- Logic high input for any voltage from 2.4V to VS
- Low equivalent input capacitance (typ.) 7pF
- Low supply current 450µA with logic 1 input
- Low output impedance 1.0Ω
- Output voltage swing to within 25mV of ground or VS

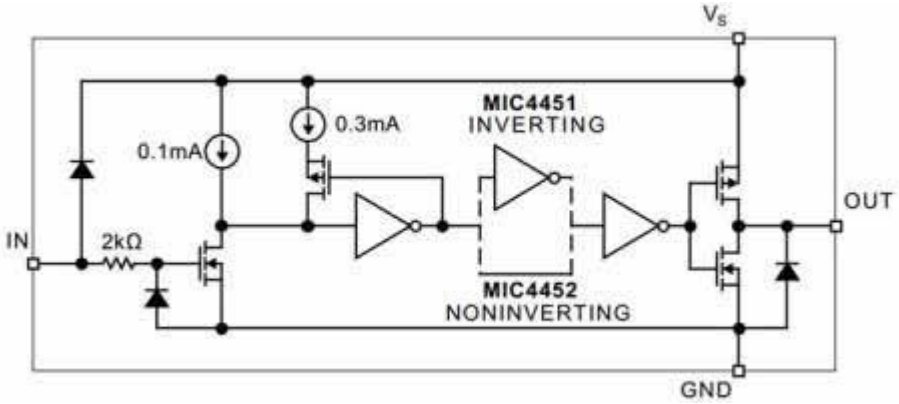

<< BACK

TC4451/4452

12A High-Speed MOSFET Drivers

Recommended for Automotive Designs

Online Datasheet

Features:

- High Peak Output Current: 13A (typ.)
- Wide Input Supply Voltage Operating Range:
  - 4.5V to 18V
- High Continuous Output Current:
  - 2.6A (max.)
- Matched Fast Rise and Fall Times:
  - 21ns with 10,000 pF Load
  - 42ns with 22,000 pF Load
- Matched Propagation Delays: 44ns (typ.)
- Low Supply Current:
  - With Logic ‘1’ Input: 140µA (typ.)
  - With Logic ‘0’ Input: 40µA (typ.)
- Low Output Impedance: 0.9Ω (typ.)
- Latch-Up Protected: Will Withstand 1.5A –
  - Output Reverse Current
- Input Will Withstand Negative Inputs up to 5V
- Pin-Compatible with the TC4420/TC4429, -
  - TC4421/TC4422 and TC4421A/TC4422A
- Space-Saving, Thermally-Enhanced, - 8-Pin DFN Package
- Recommended for Automotive Design (TC4451)

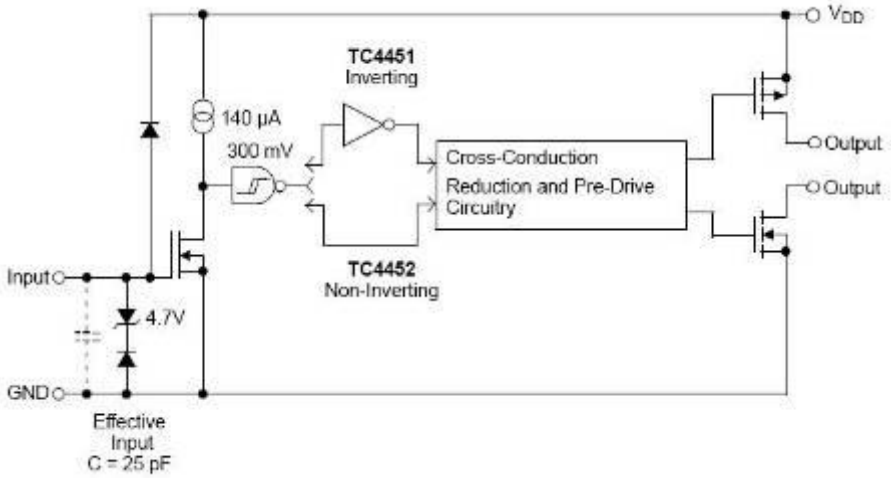

<< BACK

MICROCHIP

MIC4421A/2A

12A Peak Low-Side MOSFET Driver Bipolar/CMOS/DMOS Process

Online Datasheet

Features:

- High peak-output current: 9A peak (typ.)
- Wide operating range: 4.5V to 18V (typ.)
- Minimum pulse width: 50ns
- Input will withstand negative swing of up to 5V
- High capacitive load drive: 47,000pF
- Low delay time: 15ns (typ.)
- Logic high input for any voltage from 2.4V to VS
- Low equivalent input capacitance (typ.): 7pF
- Low supply current: 500µA (typ.)
- Latch-up proof: fully isolated process is inherently –
  - immune to any latch-up.
- Output voltage swing to within 25mV of ground or VS

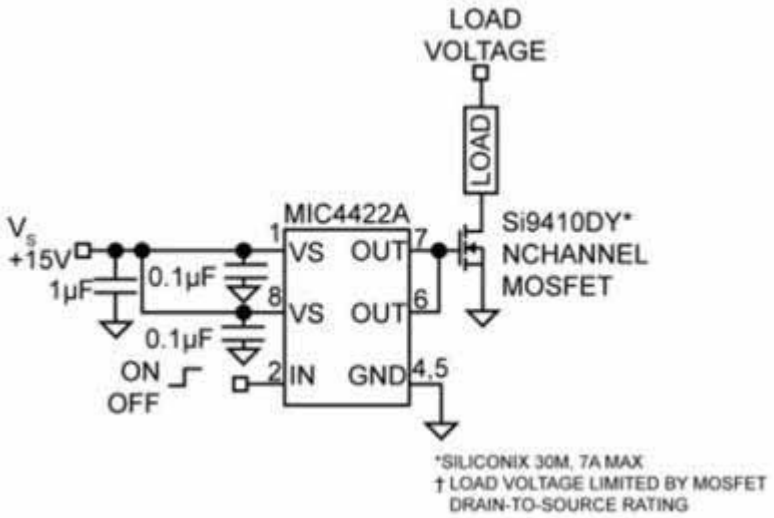

<< BACK

TC4421A/4422A

9A High-Speed MOSFET Drivers

Recommended for Automotive Designs

Online Datasheet

Features:

- High Peak Output Current: 9A
- Wide Input Supply Voltage Operating Range:
  - 4.5V to 18V
- High Continuous Output Current: 2A (max.)
- Fast Rise and Fall Times:
  - 30ns with 4,700pF Load
  - 180ns with 47,000pF Load
- Short Propagation Delays: 30ns (typ.)
- Low Supply Current:
  - With Logic ‘1’ Input: 200µA (typ.)
  - With Logic ‘0’ Input: 55µA (typ.)
- Low Output Impedance: 1.4Ω (typ.)
- Latch-Up Protected: Will Withstand 1.5A
  - Output Reverse Current
- Input Will Withstand Negative Inputs up to 5V
- Pin-Compatible with the TC4420/TC4429
- Space-saving 8-Pin 6x5 DFN Package
- Recommended for Automotive Design

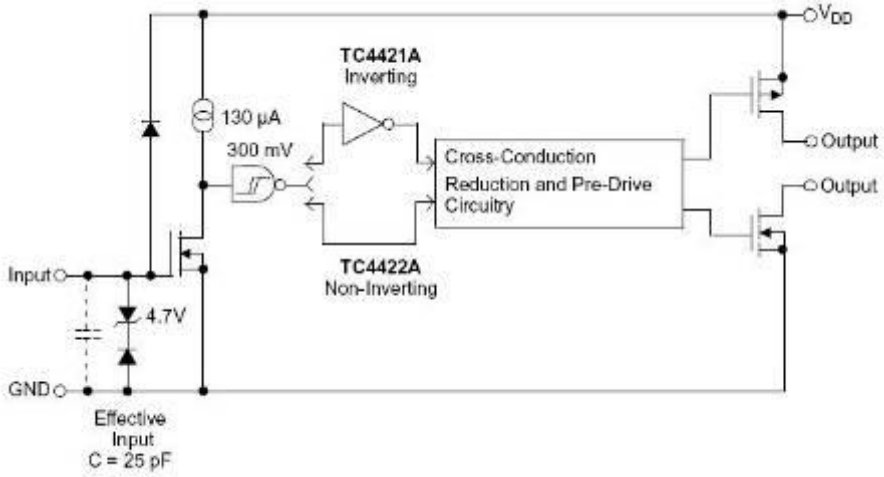

<< BACK

MCP14A0901/2

9A MOSFET Driver with Low Threshold Input and Enable

Online Datasheet

Features:

- High Peak Output Current: 9.0A (typical)
- Wide Input Supply Voltage Operating Range: -4.5V to 18V
- Low Shoot-Through/Cross-Conduction Current in Output Stage
- High Capacitive Load Drive Capability: -10,000 pF in 24 ns (typical)
- Short Delay Times: 27 ns (tD1), 27 ns (tD2) (typical)
- Low Supply Current: 360 µA (typical)
- Low-Voltage Threshold Input and Enable with Hysteresis
- Latch-Up Protected: Withstands 500 mA Reverse Current
- Space-Saving Packages:
  - -8-Lead MSOP
  - -8-Lead SOIC
  - -8-Lead 2 x 3 TDFN

MCP14A0901/MCP14A0902
MSOP/SOIC

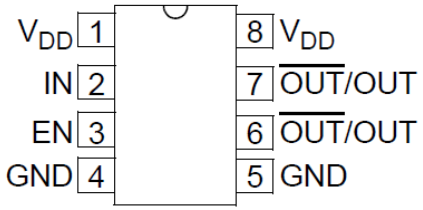

MCP14A0901/MCP14A0902
2 x 3 TDFN*

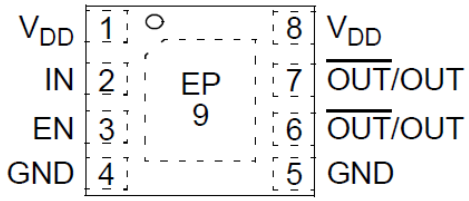

* Includes Exposed Thermal Pad (EP)

<< BACK

MCP1406/7

6A High-Speed Power MOSFET Drivers

Recommended for Automotive Designs

Online Datasheet

Features:

- High Peak Output Current: 6.0A (typ.)
- Wide Input Supply Voltage Operating Range:
  - 4.5V to 18V
- High Capacitive Load Drive Capability:
  - 2500pF in 20ns
  - 6800pF in 40ns
- Short Delay Times: 40ns (typ.)
- Matched Rise/Fall Times
- Low Supply Current:
  - With Logic ‘1’ Input: 130µA (typ.)
  - With Logic ‘0’ Input: 35µA (typ.)
- Latch-Up Protected: Will Withstand 1.5A
- Reverse Current
- Logic Input Will Withstand Negative
- Swing up to 5V
- Pin compatible with the TC4420/TC4429
- Space-saving 8-Pin SOIC, PDIP and 8-Pin
- 6x5 DFN Packages
- Recommended for Automotive Design

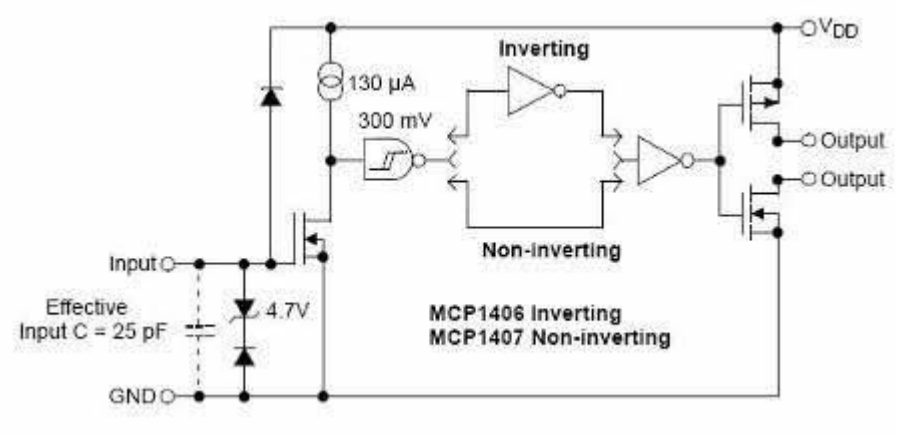

<< BACK

MIC4420/9

6A-Peak Low-Side MOSFET Driver Bipolar/CMOS/DMOS Process

Online Datasheet

Features:

- CMOS construction
- Latch-up protected: will withstand >500mA –
  - reverse output current
- Logic input withstands negative swing of up to 5V
- Matched rise and fall times of 25ns
- High peak output current at 6A
- Wide operating range from 4.5V to 18V
- High capacitive load drive of 10,000pF
- Low delay time of 55ns typical
- Low delay time 55ns typ.
- Logic high input for any voltage from 2.4V to VS
- Low equivalent input capacitance (typ.) 6pF
- Low supply current 450µA with logic 1 input
- Low output impedance 2.5Ω
- Output voltage swing within 25mV of ground or VS

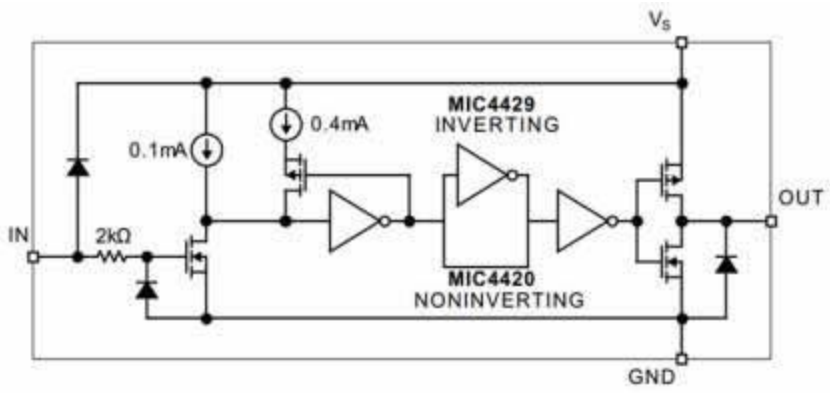

<< BACK

MCP14A0601/2

6A MOSFET Driver with Low Threshold Input and Enable

Online Datasheet

Features:

- Peak Output Current: 6 A (typical)
- Wide Supply Voltage Range: 4.5 V to 18 V
- Low Shoot-Through/Cross-Conduction Current –
  - in Output Stage
- High Capacitive Load Drive Capability:
  - 2500 pF in 10 ns (typ.)
  - Short Delay: 22 ns (tD1), 22 ns (tD2) (typ.)
- Low Supply Current: 375 µA (typ.)
- Low Voltage Threshold Input and Enable
  - Hysteresis: 1.2 to 1.6 V
- Latch-Up Protected:
  - Withstands 500 mA Reverse Current
- Small Packages:
  - 8- Lead MSOP
  - 8- Lead SOIC
  - 8- Lead 2x3 TDFN

Package Types

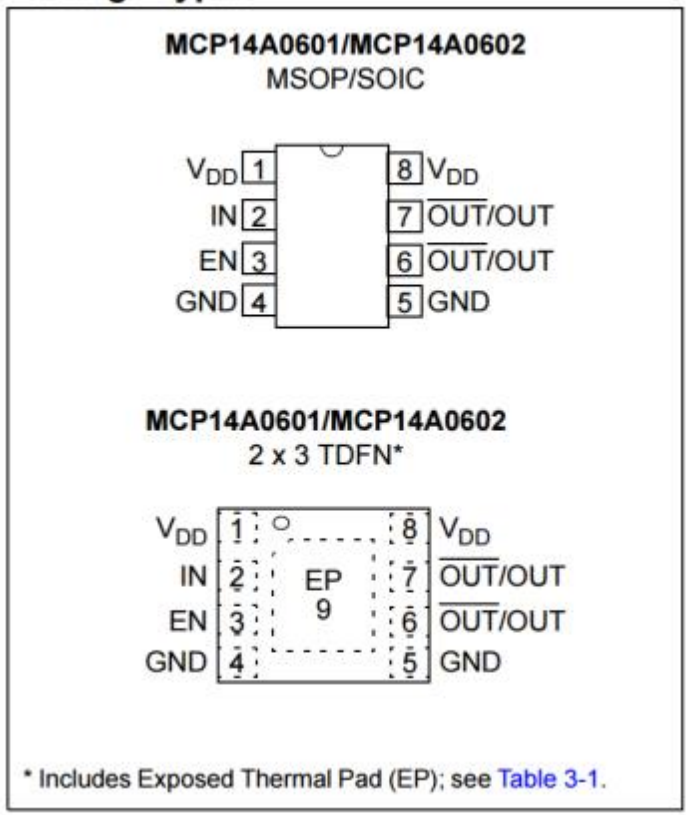

<< BACK

MCP14A0451/2

4.5A MOSFET Driver with Low Threshold Input and Enable

Online Datasheet

Features:

- Peak Output Current: 4.5 A (typical)
- Wide Supply Voltage Range: 4.5 V to 18 V
- Low Shoot-Through/Cross-Conduction –
  - Current in Output Stage
- High Capacitive Load Drive Capability:
  - 2200 pF in 9.5 ns (typ.)
  - Short Delay: 16 ns (tD1), 19.5 ns (tD2) –
    - (typ.)
- Low Supply Current: 355 µA (typ.)
- Low Voltage Threshold Input and Enable
  - Hysteresis: 1.2 to 1.6 V
- Latch-Up Protected:
  - Withstands 500 mA Reverse Current
- Small Packages:
  - 8- Lead MSOP
  - 8- Lead SOIC
  - 8- Lead 2x2 WDFN

Package Types

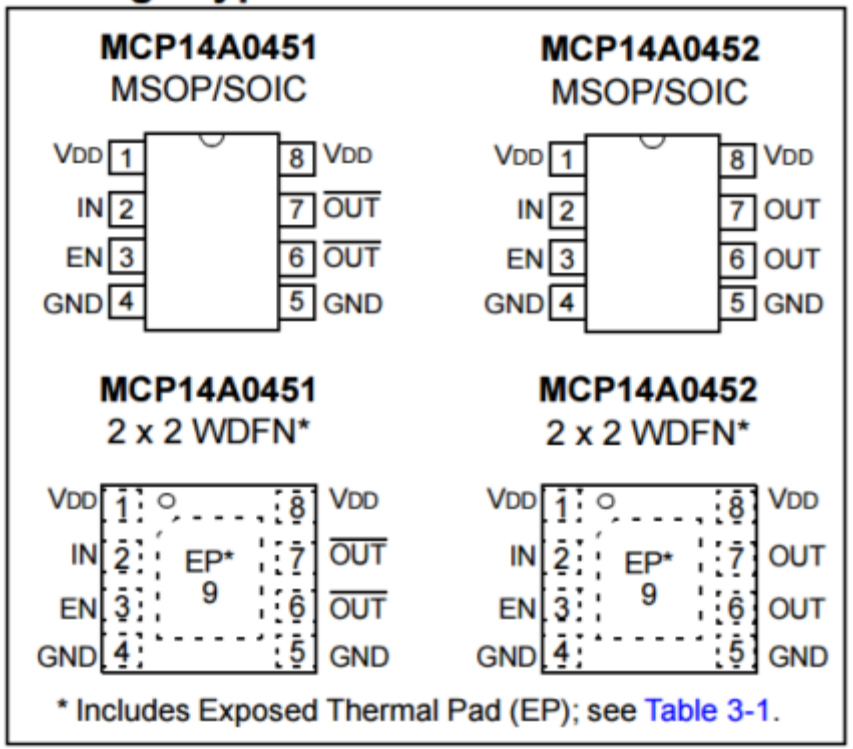

* Includes Exposed Thermal Pad (EP); see Table 3-1.

<< BACK

MCP14A0301/2

3A MOSFET Driver with Low Threshold Input and Enable

Online Datasheet

Features:

- Peak Output Current: 3.0 A (typical)
- Wide Supply Voltage Range: 4.5 V to 18 V
- Low Shoot-Through/Cross-Conduction –
  - Current in Output Stage
- High Capacitive Load Drive Capability:
  - 1800 pF in 13 ns (typ.)
  - Short Delay: 15 ns (tD1), 18 ns (tD2) –
    - (typ.)
- Low Supply Current: 360 µA (typ.)
- Low Voltage Threshold Input and Enable with Hysteresis
- Latch-Up Protected:
  - Withstands 500 mA Reverse Current
- Small Packages:
  - 8- Lead MSOP
  - 8- Lead SOIC
  - 8- Lead 2x2 WDFN

Package Types

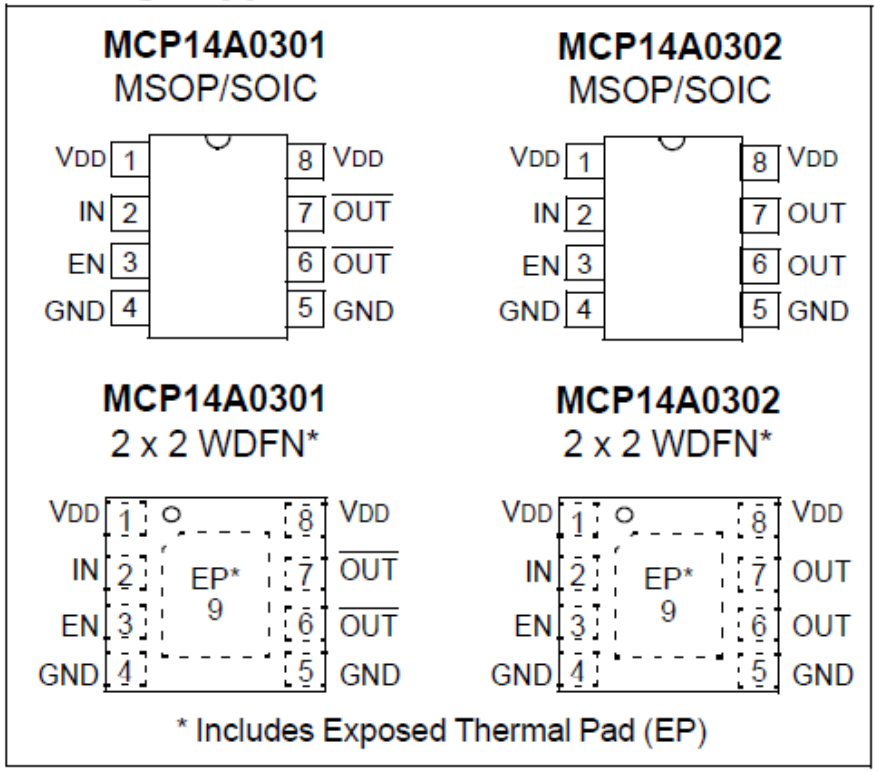

<< BACK

MIC4414/5

1.5A 4.5V to 18V Low-Side MOSFET Driver

Online Datasheet

Features:

- Ultra-small 4-pin 1.2mm x 1.2mm thin QFN –
  - package
- +4.5V to +18V operating supply voltage range
- 1.5A peak current
  - 3.5Ω output resistance at 18V
  - 9Ω output resistance at 5V
- Low steady-state supply current
  - 77µA control input low
  - 445µA control input high
- 12ns rise and fall times into 1000pF load
- MIC4414 (non-inverting)
- MIC4415 (inverting)
- -40ºC to +125ºC junction temperature
- MIC4414 (non-inverting)
- MIC4415 (inverting)

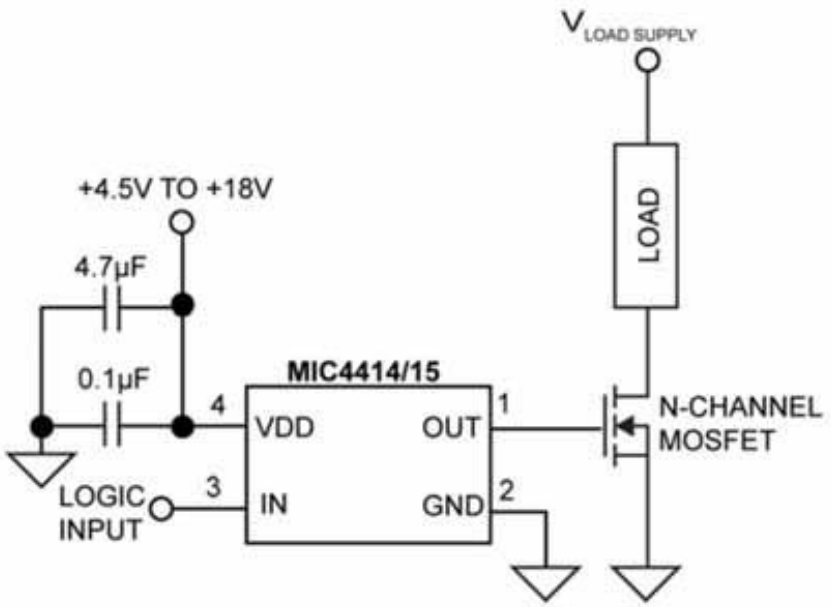

<< BACK

MICROCHIP

MCP1415/6

Dual Input Synchronous MOSFET Driver

Recommended for Automotive Designs

Online Datasheet

Features:

- High Peak Output Current:
  - 1.5A (typ.)
- Wide Input Supply Voltage Operating Range:
  - 4.5V to 18V
- Low Shoot-Through/Cross-Conduction -
  - Current in Output Stage
- High Capacitive Load Drive Capability:
  - 470pF in 13ns (typ.)
  - 1000pF in 20ns (typ.)
- Short Delay Times: 41ns (t_{D1}), 48ns (t_{D2}), (typ.)
- Low Supply Current:
  - With Logic '1' Input: 0.65mA (typ.)
  - With Logic '0' Input: 0.1mA (typ.)
- Latch-Up Protected: Will Withstand 500mA –
  - Reverse Current
- Logic Input Withstands Negative Swing up to 5V
- Space-saving 5-SOT-23 Package
- Recommended for Automotive Design

Functional Block Diagram

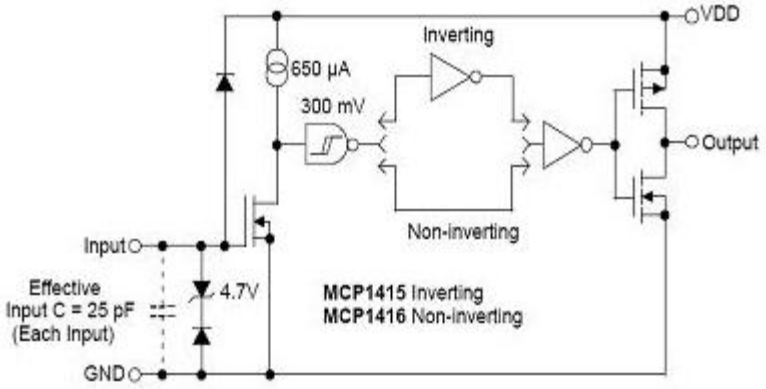

Note: Unused inputs should be grounded.

SOT-23-5

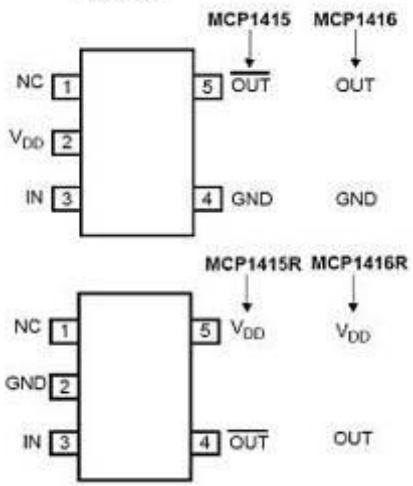

<< BACK

MCP14A0151/2

1.5A MOSFET Driver with Low Threshold Input And Enable

Online Datasheet

Features:

- Peak Output Current: 1.5 A (typical)
- Wide Supply Voltage Range: 4.5 V to 18 V
- Low Shoot-Through/Cross-Conduction Current – - in Output Stage
- High Capacitive Load Drive Capability:
  - 1000 pF in 11.5 ns (typ.)
  - Short Delay: 33 ns (t_{D1}), 24 ns (t_{D2}) (typ.)
- Low Supply Current: 375 µA (typ.)
- Low Voltage Threshold Input and Enable
  - Hysteresis: 1.2 to 1.6 V
- Latch-Up Protected:
  - Withstands 500 mA Reverse Current
- Small Packages: 6-lead SOT-23 and 2x2 DFN

Functional Block Diagram

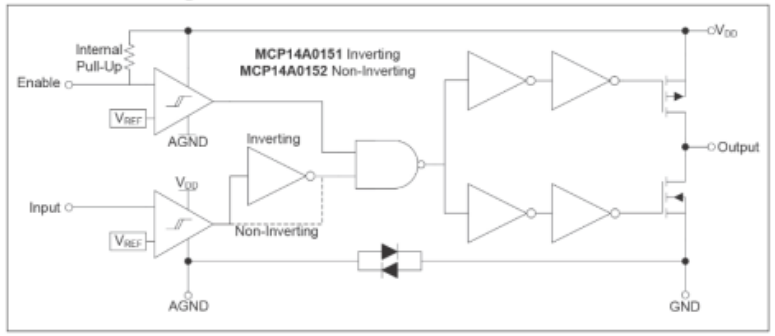

<< BACK

MICROCHIP

MIC4416/7

IttyBitty® Low-Side MOSFET Driver

Online Datasheet

Features:

- +4.5V to +18V operation
- Low steady-state supply current
  - 50µA typical, control input low
  - 370µA typical, control input high
- 1.2A nominal peak output
  - 3.5Ω typical output resistance at 18V supply
  - 7.8Ω typical output resistance at 5V supply
- Operates in low-side switch circuits
- TTL-compatible input withstands -20V
- ESD protection
- 25mV maximum output offset from supply or ground
- Inverting and noninverting versions

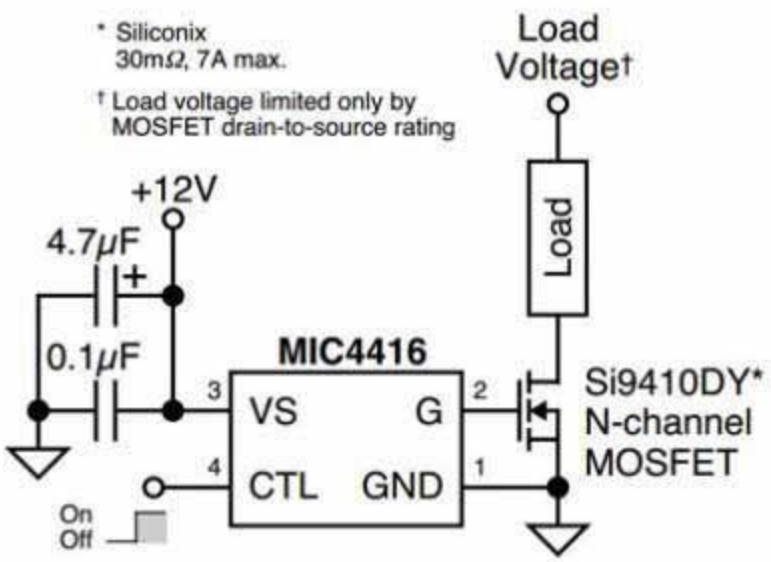

<< BACK

MP1401/02

Tiny 500 mA, High-Speed Power MOSFET Driver

Recommended for Automotive Designs

Online Datasheet

Features:

- High Peak Output Current: 500mA (typ.)
- Wide Input Supply Voltage Operating Range:
  - 4.5V to 18V
- Low Shoot-Through/Cross-Conduction –
  - Current in Output Stage
- High Capacitive Load Drive Capability:
  - 470pF in 19ns (typ.)
  - 1000pF in 34ns (typ.)
- Short Delay Times: 35ns (typ.)
- Matched Rise/Fall Times
- Low Supply Current:
  - With Logic '1' Input – 0.85mA (typ.)
  - With Logic '0' Input – 0.10mA (typ.)
- Latch-Up Protected: Will Withstand 500mA –
  - Reverse Current
- Logic Input Will Withstand Negative Swing –
  - Up To 5V
- Packages: 5-Pin SOT-23
- Recommended for Automotive Design (MCP1401)

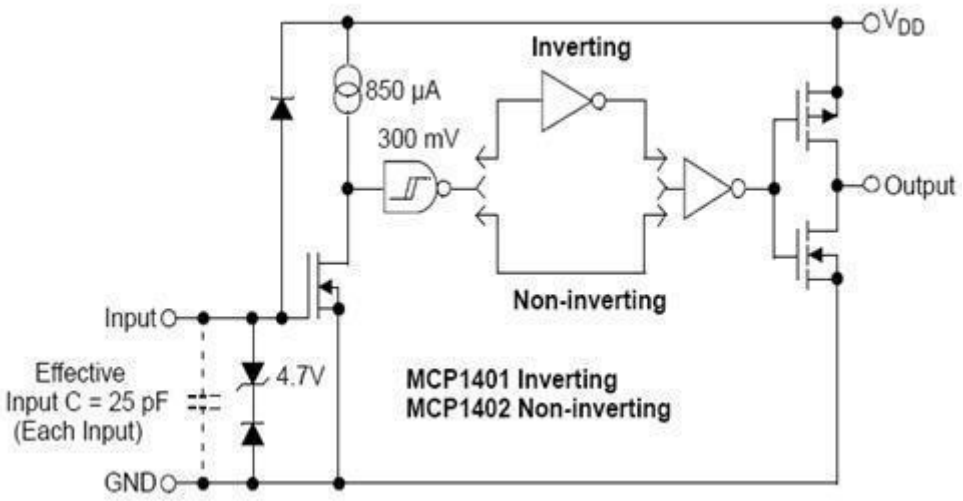

<< BACK

MICROCHIP

MCP14A0051/2

0.5A MOSFET Driver with Low Threshold Input And Enable

Online Datasheet

Features:

- Peak Output Current: 0.5 A (typical)
- Wide Supply Voltage Range: 4.5 V to 18 V
- Low Shoot-Through/Cross-Conduction –
  - Current in Output Stage
- High Capacitive Load Drive Capability:
  - 1000 pF in 40 ns (typ.)
  - Short Delay: 33 ns (t_{D1}), 24 ns (t_{D2}) (typ.)
- Low Supply Current: 375 µA (typ.)
- Low Voltage Threshold Input and Enable
  - Hysteresis: 1.2 to 1.6 V
- Latch-Up Protected:
  - Withstands 500 mA Reverse Current
- Small Packages: 6-lead SOT-23 and 2x2 DFN

Functional Block Diagram

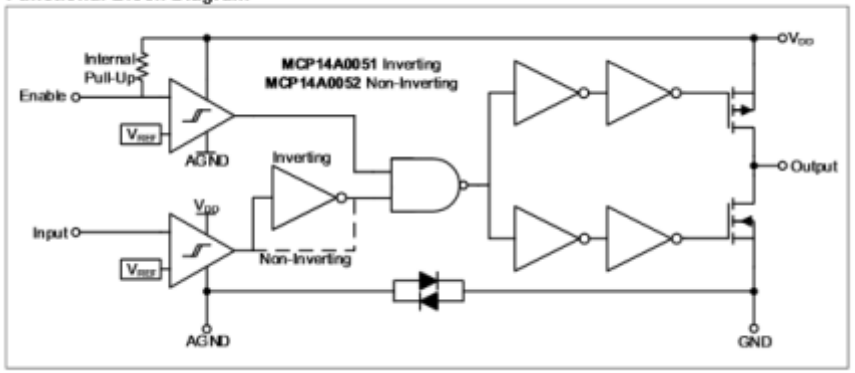

<< BACK

TC1413/N

3A High-Speed MOSFET Drivers

Online Datasheet

Features:

- High Peak Output Current: 3A
- Latch-Up Protected: Will Withstand –
  - 500mA Reverse Current
- Input Will Withstand Negative Inputs –
  - Up to 5V
- ESD Protected: 4kV
- Wide Operating Range: 4.5V to 16V
- High Capacitive Load Drive Capability:
  - 1800pF in 20ns
- Short Delay Time: 35ns (typ.)
- Matched Delay Times
- Low Supply Current:
  - With Logic ‘1’ Input: 500µA
  - With Logic ‘0’ Input: 100µA
- Low Output Impedance: 2.7Ω
- Pinout Same as TC1410/11/12
- Space Saving 8-Pin MSOP Package

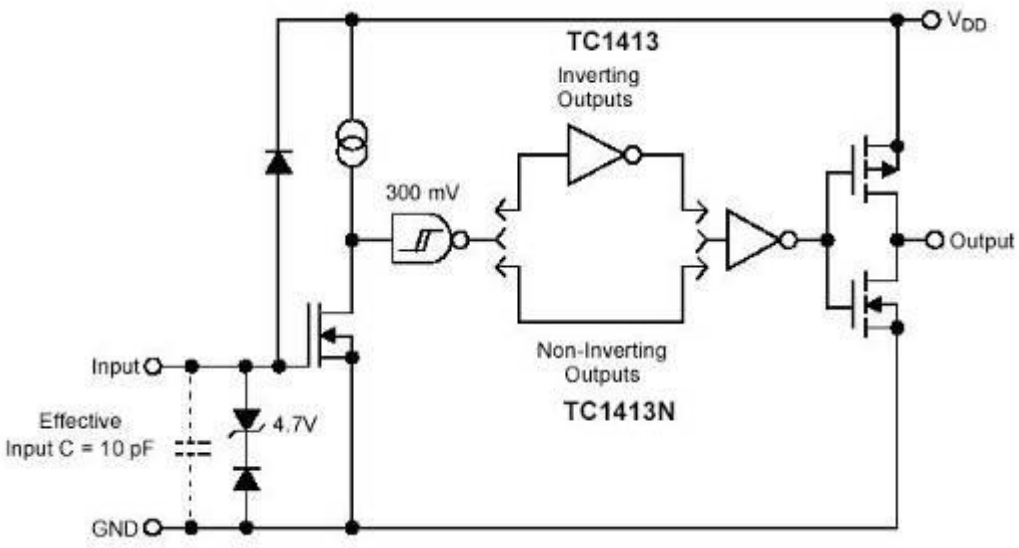

<< BACK

TC1412/N

2A High-Speed MOSFET Drivers

Online Datasheet

Features:

- High Peak Output Current: 2A
- Latch-Up Protected: Will Withstand –
  - 500mA Reverse Current
- Input Will Withstand Negative –
  - Inputs Up to 5V
- ESD Protected: 4kV
- Wide Operating Range: 4.5V to 16V
- High Capacitive Load Drive Capability:
  - 1000pF in 18ns
- Short Delay Time: 35ns (typ.)
- Matched Delay Times
- Low Supply Current:
  - With Logic ‘1’ Input: 500µA (typ.)
  - With Logic ‘0’ Input: 100µA (typ.)
- Low Output Impedance: 4Ω (typ.)
- Pinout Same as TC1410/11/13
- Space Saving 8-Pin MSOP Package

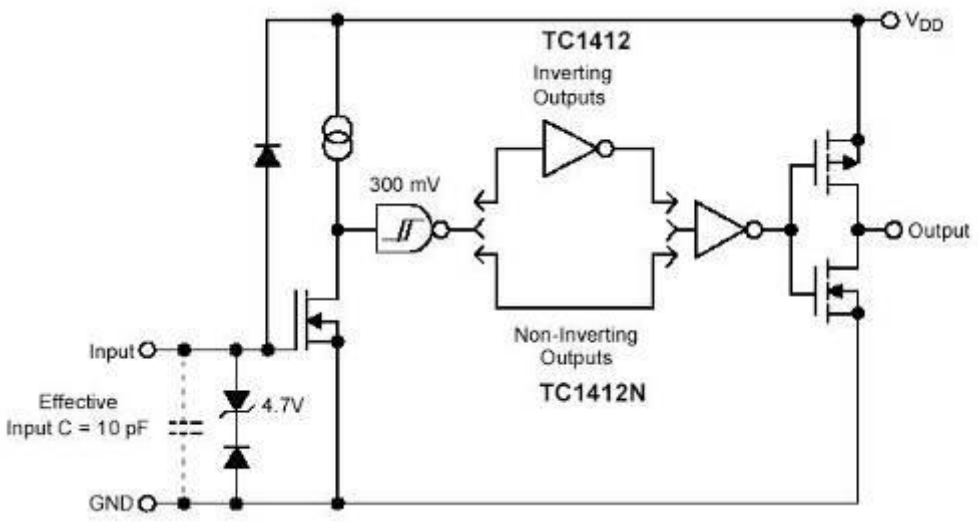

<< BACK

TC1411/N

8-Pin SOIC/MSOP/TSSOP/DIP Evaluation Board

Online Datasheet

Features:

- Latch-Up Protected: Will Withstand 500mA –
  - Reverse Current
- Input Will Withstand Negative Inputs Up to 5V
- ESD Protected: 4kV
- High Peak Output Current: 1A
- Wide Input Supply Voltage Operating
  - Range: 4.5V to 16V
- High Capacitive Load Drive Capability:
  - 1000pF in 25ns (typ.)
- Short Delay Time: 30ns (typ.)
- Matched Delay Times
- Low Supply Current
  - With Logic ‘1’ Input: 500µA
  - With Logic ‘0’ Input: 100µA
- Low Output Impedance: 8Ω
- Available in Space-Saving 8-pin MSOP Package
- Pinout Same as TC1410/TC1412/TC1413

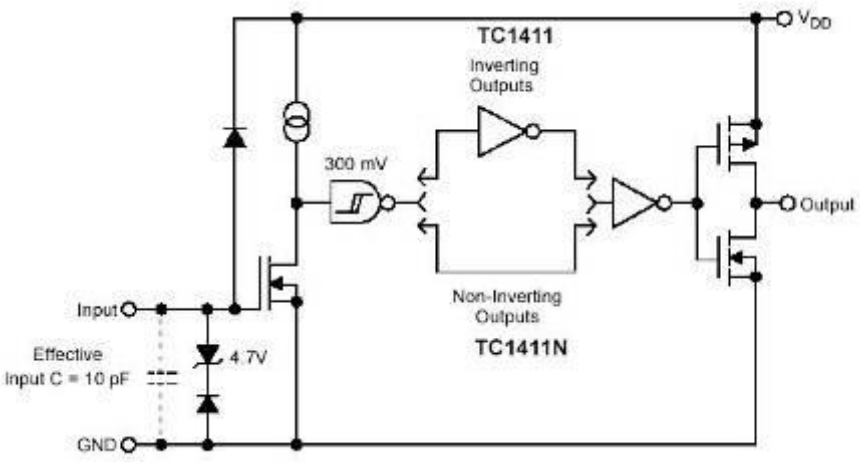

<< BACK

TC1410/N

8-Pin SOIC/MSOP/TSSOP/DIP Evaluation Board

Online Datasheet

Features:

- Latch-Up Protected:
  - Will Withstand 500mA Reverse Current
- Input Will Withstand Negative Inputs Up to 5V
- ESD Protected: 4kV
- High Peak Output Current: 0.5A
- Wide Input Supply Voltage Operating Range:
  - 4.5V to 16V
- High Capacitive Load Drive Capability:
  - 500pF in 25ns (typ.)
- Short Delay Time: 30ns (typ.)
- Consistent Delay Times With Changes in –
  - Supply Voltage
- Matched Delay Times
- Low Supply Current
  - With Logic ‘1’ Input: 500µA
  - With Logic ‘0’ Input: 100µA
- Low Output Impedance: 16Ω
- Pinout Same as TC1411/TC1412/TC1413
- Packages: 8-pin MSOP

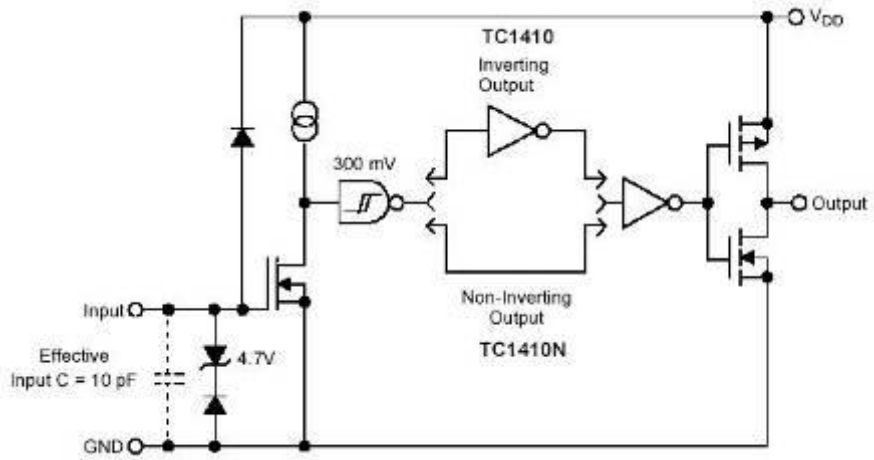

<< BACK

MIC44F18/19/20

6A High Speed MOSFET Drivers in 2mm x 2mm Package

Online Datasheet

Features:

- 4.5V to 13.2V input operating range
- 6A peak output current
- High accuracy ±5% enable input threshold
- High speed switching capability:
  - 10ns rise time in 1000pF load
  - <15ns propagation delay time
- Flexible UVLO function:
  - 4.2V internally set UVLO
  - Programmable with external resistors
- Latch-up protection to >500mA reverse –
  - current on the output pin
- Enable function
- Thermally enhanced ePad MSOP-8 package option
- Miniature 2mm x 2mm MLF®-8 package option
- Pb-free packaging

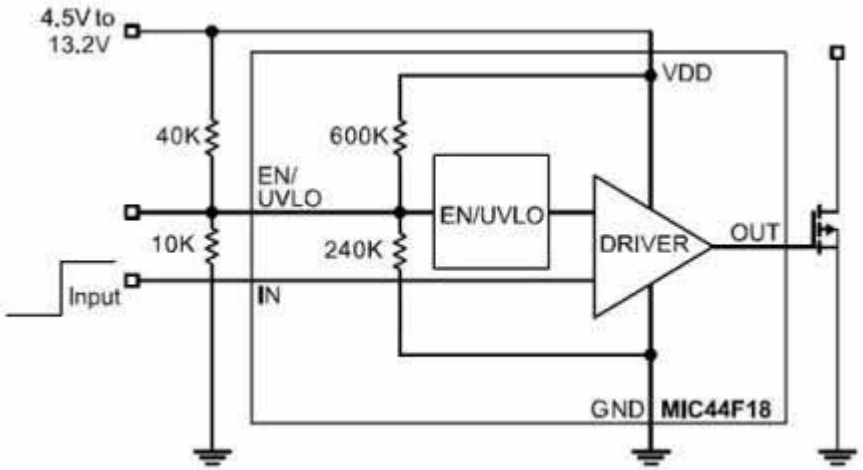

<< BACK

Online Datasheet

Power CMOS Drivers w/ Voltage Tripler

Features:

- Power Driver With On Board Voltage Booster
- Low I_{DD}: <4mA
- Small Package: 8-Pin PDIP
- Under-Voltage Circuitry
- Fast Rise-Fall Time: <40ns @1000pF
- Below-Rail Input Protection

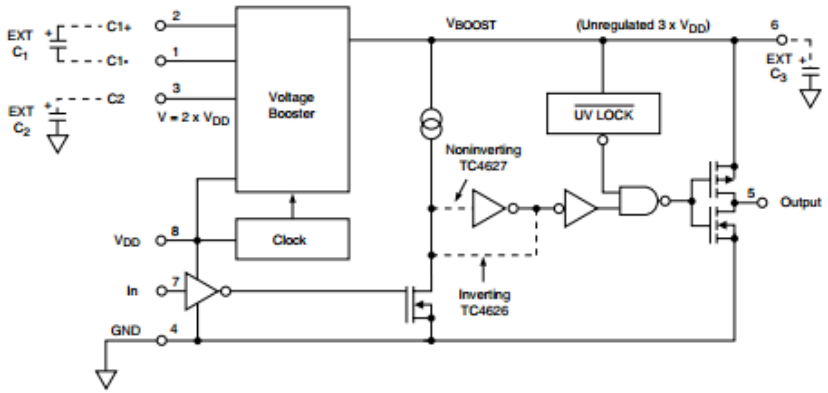

<< BACK

MAQ4123/4/5

Automotive AEC-Q100 Qualified Dual 3A Peak Low-Side MOSFET Driver

Recommended for Automotive Designs

Online Datasheet

Features:

- Automotive AEC-Q100 qualified
- High ±3A peak output current
- Wide 4.5V to 20V supply voltage range
- Low 2.3Ω output resistance
- Logic input withstands swing to -5V
- Output voltage swings within 25mV of ground or VS
- Low supply current
  - 2.0mA with logic 1 input (maximum over – - temperature)
  - 300µA with logic 0 input (maximum over – - temperature)
- '426/7/8-, '1426/7/8-, '4426/7/8 industry standard pin out
- Fast 10ns rise/fall times with 1800pF capacitive load
- TTL/CMOS logic inputs independent of supply voltage
- Inverting, non-inverting, and differential configurations
- -40ºC to +125ºC temperature range
- Recommended for Automotive Design

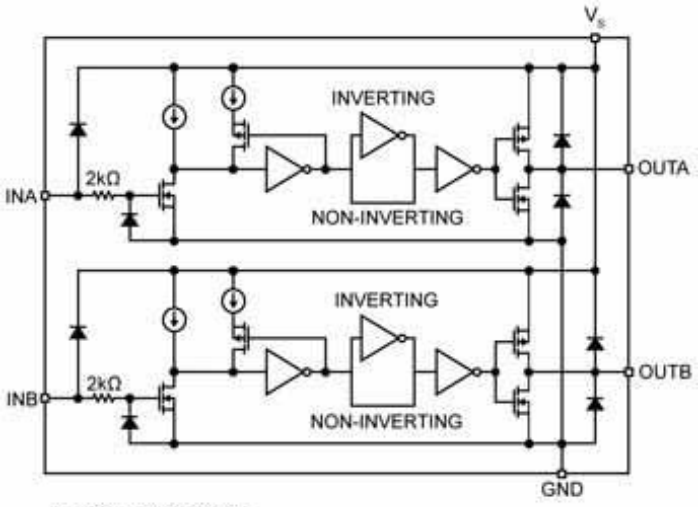

INTEGRATED COMPONENT COUNT:
- 4 RESISTORS
- 4 CAPACITORS
- 52 TRANSISTORS

<< BACK

MIC4126/7/8

Dual 1.5A-Peak Low-Side MOSFET Drivers in Advanced Packaging

Online Datasheet

Features:

- Dual 1.5A-peak drivers
- 4.5V to 20V operating range
- Exposed backside pad packaging reduces heat
  - ePad SOIC-8L (θJA = 58°C/W)
  - ePad MSOP-8L (θJA = 60°C/W)
  - 3mm x 3mm MLF®-10L (θJA = 60°C/W)
- Bipolar/CMOS/DMOS construction
- 25mV maximum output offset from supply or ground
- Latch-up protection to >500mA reverse current
- Switches 1000pF in 25ns
- Logic-input threshold independent of supply voltage
- Logic-input protection to -5V
- 6pF typical equivalent input capacitance
- -40ºC to +125ºC operating junction temperature range

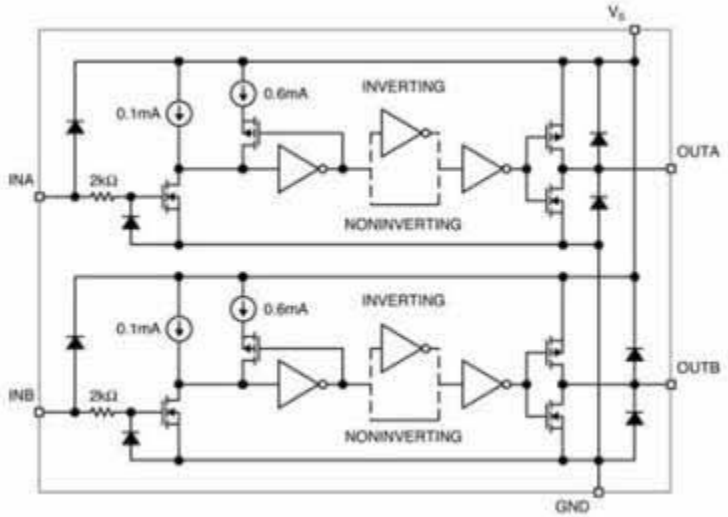

<< BACK

MCP1403/4/5

4.5A Dual High-Speed Power MOSFET Drivers

Recommended for Automotive Designs

Online Datasheet

Features:

- High Peak Output Current: 4.5A
- Wide Input Supply Voltage Operating –
  - Range: 4.5V to 18V
- High Capacitive Load Drive Capability:
  - 2200pF in 15ns
- Short Delay Times: 40ns (typ.)
- Low Supply Current:
  - With Logic ‘1’ Input: 1.0mA (max.)
  - With Logic ‘0’ Input: 150µA (max.)
- Latch-Up Protected: Will Withstand 1.5A
- Reverse Current
- Logic Input Will Withstand Negative
- Swing up to 5V
- Packages: 8-Pin SOIC, PDIP, 6x5 DFN, and 16-Pin SOIC
- Recommended for Automotive Design (MCP1404/5)

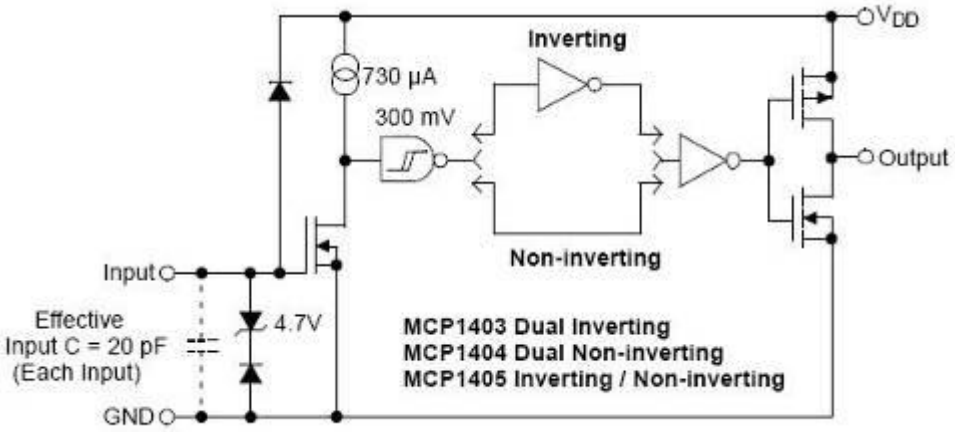

<< BACK

TC4423A/24A/25A

3A Dual High-Speed Power MOSFET Drivers

Recommended for Automotive Designs

Online Datasheet

Features:

- High Peak Output Current: 4.5A
- Wide Input Supply Voltage Operating –
  - Range: 4.5V to 18V
- High Capacitive Load Drive Capability:
  - 1800pF in 12ns
- Short Delay Times: 40ns (typ.)
- Matched Rise/Fall Times
- Low Supply Current:
  - With Logic '1' Input: 1.0mA (max.)
  - With Logic '0' Input: 150µA (max.)
- Low Output Impedance: 2.5Ω (typ.)
- Latch-up protected: will withstand –
  - 1.5A reverse current
- Logic input will withstand negative –
  - swing up to 5V
- Pin compatible with the TC4423/24/25 –
  and TC4426A/27A/28A
- Packages: 8-Pin SOIC, 8-Pin 6x5 DFN
- Recommended for Automotive Design (TC4424A)

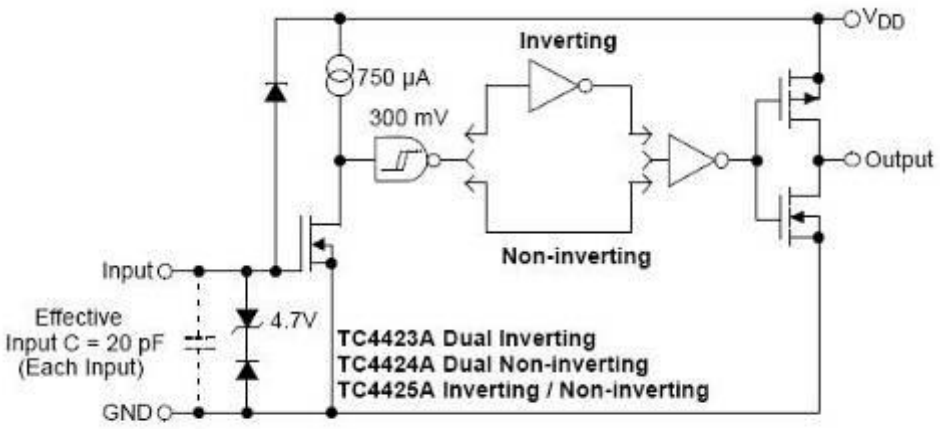

Note 1: Unused inputs should be grounded.

<< BACK

MCP14A0453/4/5

4.5A Dual MOSFET Driver with Low Threshold Input and Enable

Online Datasheet

Features:

- Peak Output Current: 4.5 A
- Wide Supply Voltage Range: 4.5 V to 18 V
- Low Shoot-Through / Cross-Conduction Current in Output Stage
- High Capacitive Load Drive Capability:
  - 2200 pF in 12 ns, (tr and tf, typ.)
  - Short Delay: 16 ns (tD1), 19 ns (tD2, typ.)
- Low Supply Current: 620 µA (typ.)
- Low Voltage Threshold Input and Enable, with hysteresis, for use with low-voltage MCUs
  - 1.3 V to 1.6 V
- Latch-Up Protected:
  - Withstands 500 mA Reverse Current
- Small Packages:
  - 8- Lead MSOP
  - 8- Lead SOIC
  - 8- Lead 2x3 TDFN

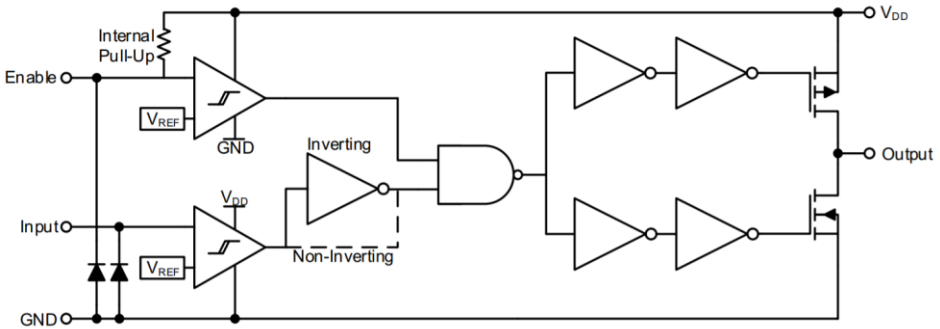

MCP14A0453 Dual Inverting
MCP14A0454 Dual Non-Inverting
MCP14A0455 Complementary: One Inverting, One Non-Inverting

MCP14A0453/4/5
MSOP/SOIC

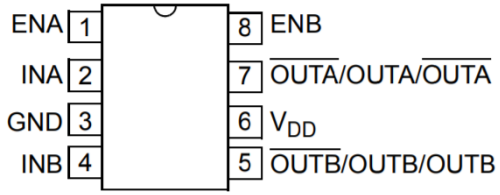

MCP14A0453/4/5
2 x 3 TDFN*

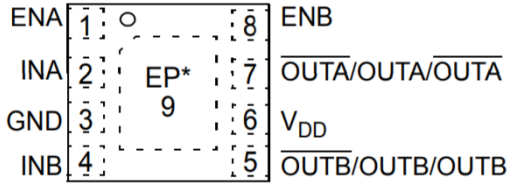

<< BACK

MIC4223/4/5

Dual 4A 4.5V to 18V 15ns Switch Time Low-Side MOSFET Drivers with Enable

Online Datasheet

Features:

- 4.5V to 18V supply voltage operating range
- High peak source/sink current
  - ±3A at V_{DD} = 8V
  - ±4A at V_{DD} = 12V
- 15ns/15ns rise and fall times with 2000pF load
- 25ns/35ns (rising/falling) input propagation delay
- 20ns/45ns (rising/falling) enable propagation delay
- Active-high driver enable inputs with 100kΩ pull-ups
- Output latch-up protection to >500mA reverse current
- Industry standard pin out with two package options
  - ePad MSOP-8 (θJA = 60°C/W)
  - 8-pin SOIC (θJA = 120°C/W)
- Available in dual-inverting (MIC4223), dual non-inverting – - (MIC4224) and complementary (MIC4225)
- -40ºC to +125ºC operating junction temperature range

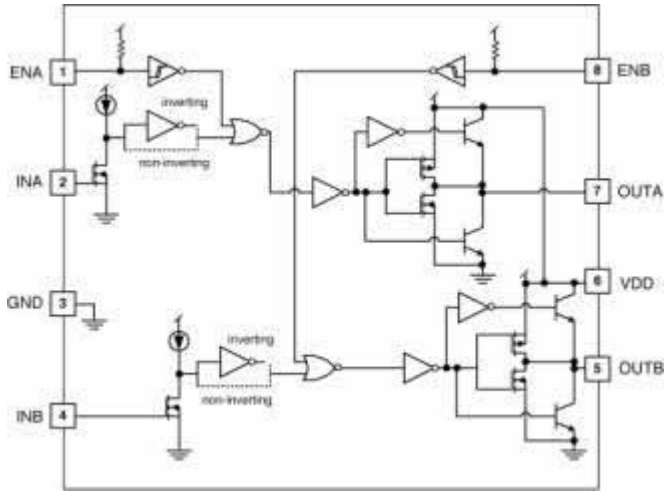

<< BACK

MCP14E3/4/5

4.0A Dual High-Speed Power MOSFET Drivers With Enable

Recommended for Automotive Designs

Online Datasheet

Features:

- High Peak Output Current: 4.0A
- Independent Enable Function for –
  - Each Driver Output
- Low Shoot-Through/Cross –
  - Conduction Current in Output –
  - Stage
- Wide Input Supply Voltage –
  - Operating Range: 4.5V to 18V
- High Capacitive Load Drive Capability:
  - 2200pF in 15ns (typ.)
  - 5600pF in 26ns (typ.)
- Short Delay Times: 50ns (typ.)
- Latch-Up Protected: Will Withstand –
  - 1.5A Reverse Current
- Logic Input Will Withstand Negative –
  - Swing Up To 5V
- Packages: 8-Pin 6x5 DFN, PDIP, SOIC
- Recommended for Automotive Design (MCP14E4)

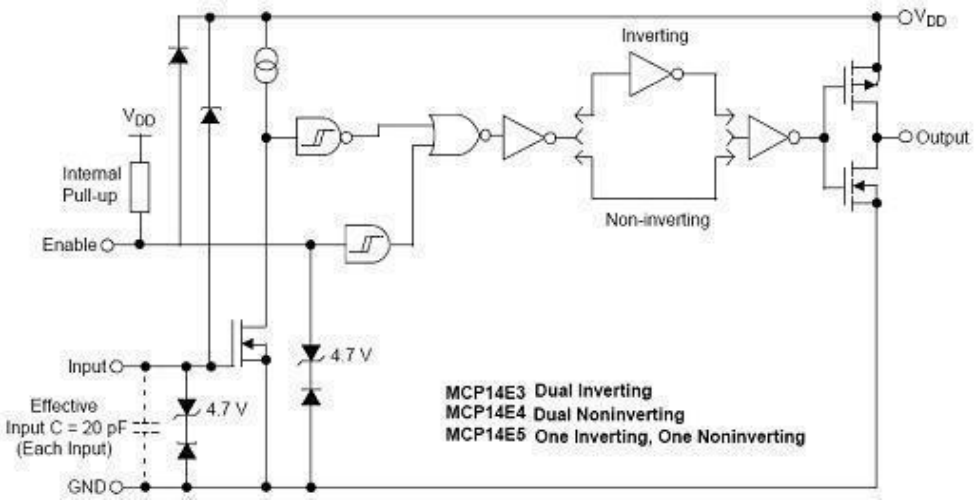

<< BACK

MICROCHIP

MIC4423/4/5

Dual 3A-Peak Low-Side MOSFET Driver
Bipolar/CMOS/DMOS Process

Online Datasheet

Features:

- Reliable, low-power bipolar/CMOS/DMOS –
  - construction
- Latch-up protected to >500mA reverse current
- Logic input withstands swing to -5V
- High 3A peak output current
- Wide 4.5V to 18V operating range
- Drives 1800pF capacitance in 25ns
- Short <40ns typical delay time
- Low equivalent 6pF input capacitance
- 3.5mA with logic 1 input
- 350µA with logic 0 input
- Low 3.5Ω typical output impedance
- Output voltage swings within 25mV of ground or VS.
- '426/7/8-, '1426/7/8-, '4426/7/8-compatible pinout
- Inverting, noninverting, and differential configurations

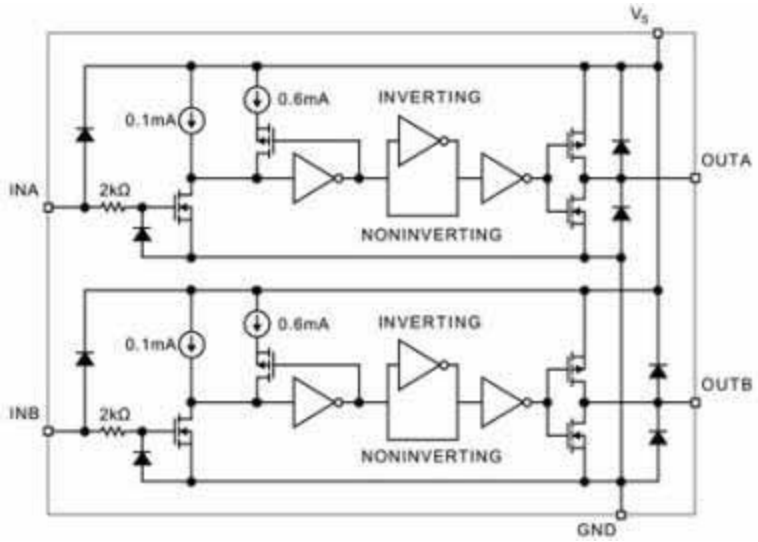

<< BACK

MCP14E9/10/11

3.0A Dual High-Speed Power MOSFET Driver With Enable

Online Datasheet

Features:

- High peak output Current: 3A (typ.)
- Dual Outputs (E9/10/11):
  - Dual inverting: MCP14E9
  - Dual non-inverting: MCP14E10
  - Complementary outputs: MCP14E11
- Enable Function for each Driver
- Low Shoot-Through/Cross-Conduction -
  - Current Wide Input Operating Range:
    - 4.5v to 18V
- High Capacitive Load drive Capability:
  - 1800 pF in 17 nsec (typ.)
- Short Delay Times: 45 nsec (typ.)
- Latch-up Protected Passed JEDEC –
  - JESD78A
- Input are TTL/CMOS compatible –
  - and will withstand negative swings –
  - Up To 5V
- ESD Protected: 4kV
- Packages: 8-Pin 6x5 DFN, PDIP, SOIC

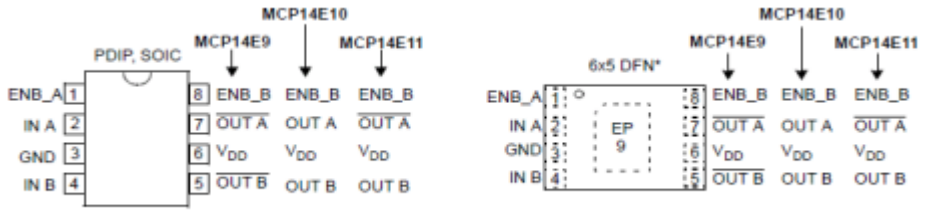

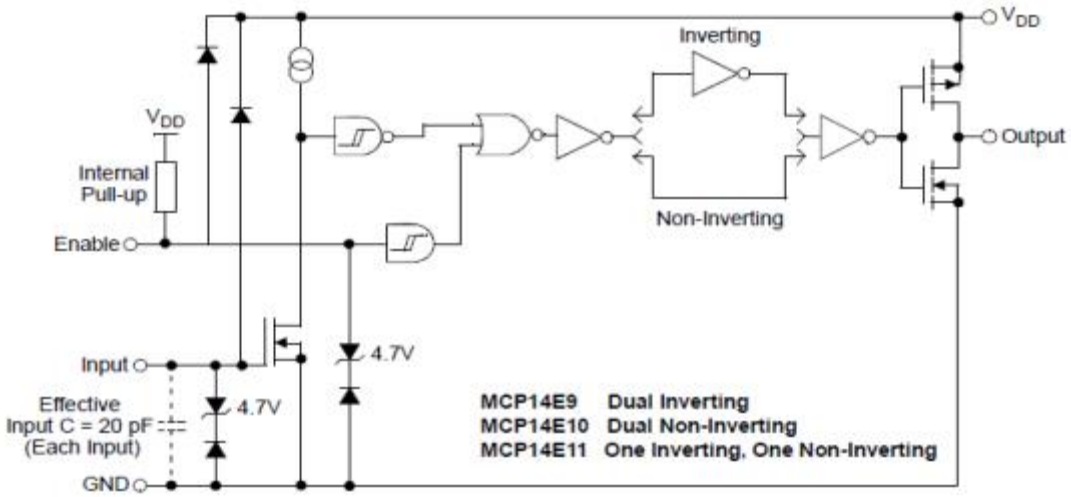

<< BACK

3A Dual High-Speed Power MOSFET Drivers

Recommended for Automotive Designs

Online Datasheet

Features:

- High Peak Output Current: 4.5A
- Wide Input Supply Voltage Operating –
  - Range: 4.5V to 18V
- High Capacitive Load Drive Capability:
  - 1800pF in 12ns
- Short Delay Times: 40ns (typ.)
- Matched Rise/Fall Times
- Low Supply Current:
  - With Logic '1' Input: 1.0mA (max.)
  - With Logic '0' Input: 150µA (max.)
- Low Output Impedance: 2.5Ω (typ.)
- Latch-up protected: will withstand –
  - 1.5A reverse current
- Logic input will withstand negative –
  - swing up to 5V
- Pin compatible with the TC4423/24/25 –
  and TC4426A/27A/28A
- Packages: 8-Pin SOIC, 8-Pin 6x5 DFN
- Recommended for Automotive Design (TC4424A)

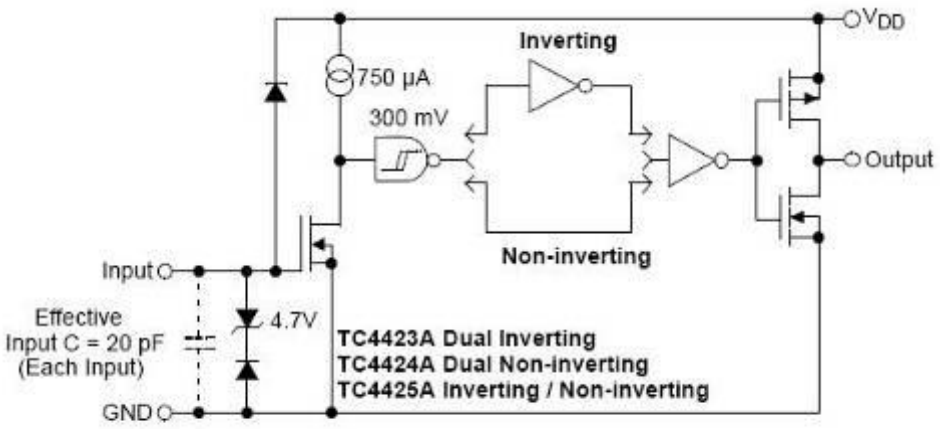

Note 1: Unused inputs should be grounded.

<< BACK

MCP14A0303/4/5

3.0A Dual MOSFET Driver with Low Threshold Input and Enable

Online Datasheet

Features:

- Peak Output Current: 3.0 A
- Wide Supply Voltage Range: 4.5 V to 18 V
- Low Shoot-Through / Cross-Conduction Current in Output Stage
- High Capacitive Load Drive Capability:
  - 1800 pF in 12 ns, (tr and tf, typ.)
  - Short Delay: 17 ns (tD1), 21 ns (tD2, typ.)
- Low Supply Current: 620 µA (typ.)
- Low Voltage Threshold Input and Enable, with hysteresis, for use with low-voltage MCUs
  - 1.3 V to 1.6 V
- Latch-Up Protected:
  - Withstands 500 mA Reverse Current
- Small Packages:
  - 8- Lead MSOP
  - 8- Lead SOIC
  - 8- Lead 2x3 TDFN

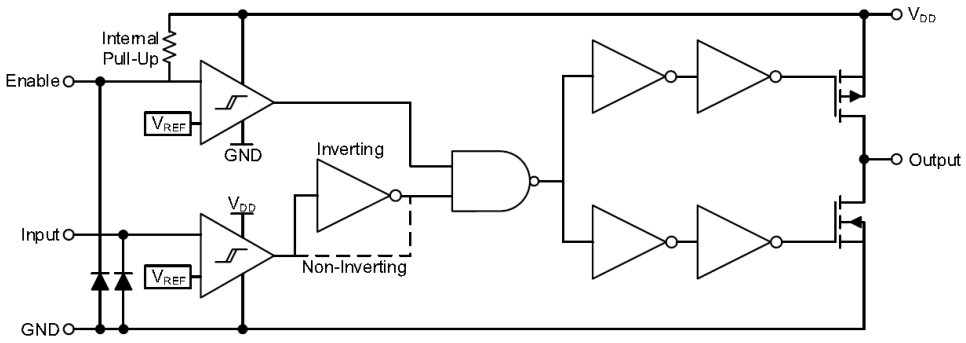

MCP14A0303/4/5

2 x 3 TDFN*

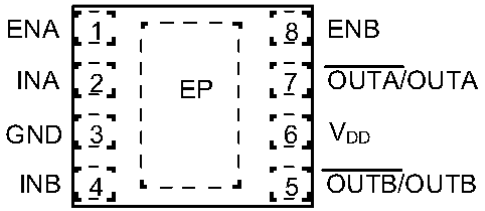

8-pin MSOP/SOIC

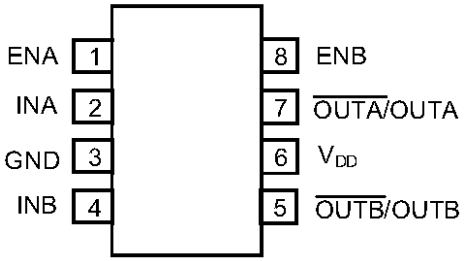

<< BACK

MCP14E6/7/8

2.0A Dual High-Speed Power MOSFET Driver With Enable

Online Datasheet

Features:

- High peak output Current: 2A (typ.)
- Dual Outputs:
  - Dual inverting: MCP14E6
  - Dual non-inverting: MCP14E7
  - Complementary outputs: MCP14E8
- Enable Function for each Driver
- Low Shoot-Through/Cross-Conduction –
  - Current in output Stage
- Wide Input Operating Range: 4.5v to 18V
- High Capacitive Load drive Capability:
  - - 1000 pF in 15 nsec (typ.)
- Short Delay Times: 45 nsec (typ.)
- Latch-up Protected Passed JEDEC –
  - JESD78A
- Input are TTL/CMOS compatible and –
  - will withstand negative swings up to 5V
- ESD Protected: 4kV
- Packages: 8-Pin 6x5 DFN, PDIP, SOIC

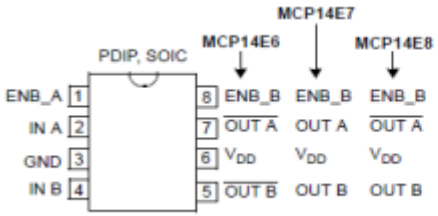

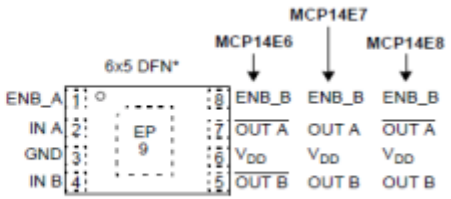

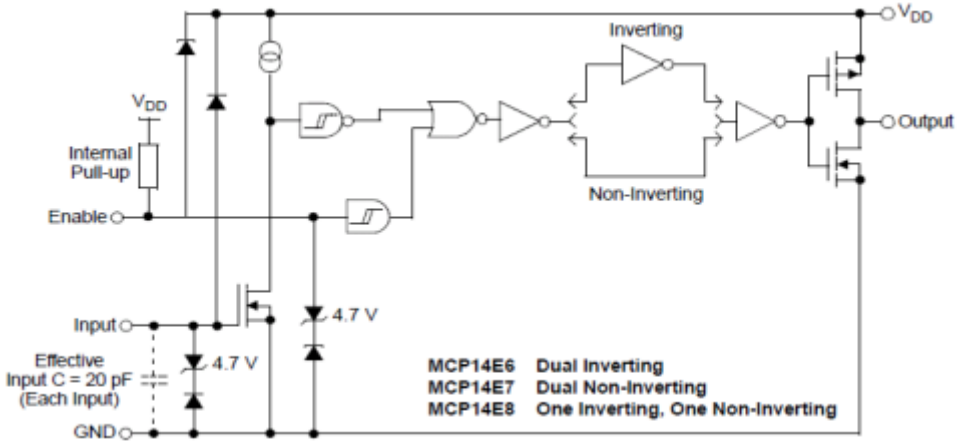

<< BACK

MIC4426/7/8

Dual 1.5A-Peak Low-Side MOSFET Driver

Online Datasheet

Features:

- Latch-up protection to >500mA reverse current
- 1.5A peak output current
- 4.5V to 18V operating range
- Low quiescent supply current
  - 4mA at logic 1 input
  - 400µA at logic 0 input
- Switches 1000pF in 25ns
- 7Ω output impedance
- <40ns typical delay
- 6pF typical equivalent input capacitance
- 25mV max. output offset from supply or ground
- Replaces MIC426/427/428 and MIC1426/1427/1428
- Dual inverting, dual noninverting, and inverting/ -
  - noninverting configurations
- ESD protection

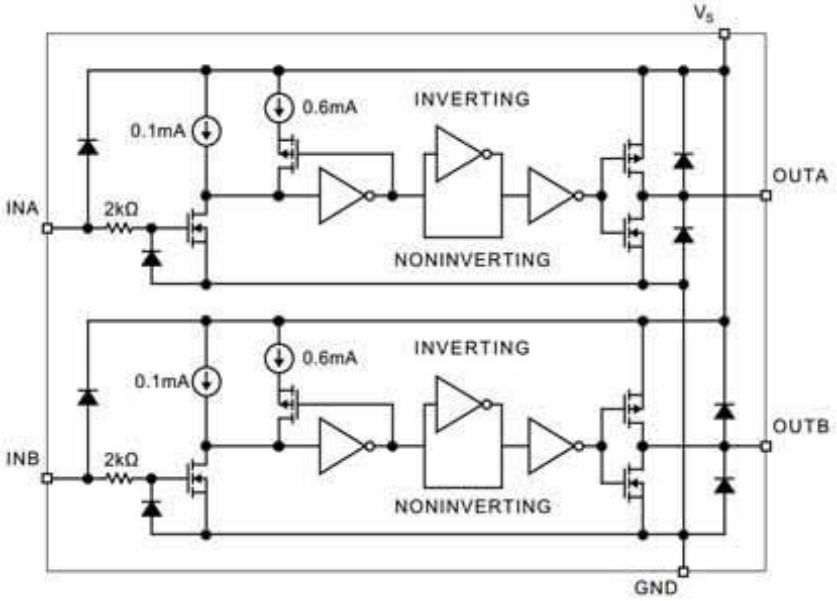

<< BACK

TC4404/5

1.5A Dual Open-Drain MOSFET Drivers

Online Datasheet

Features:

- Independently-Programmable Rise –
  - and Fall Times
- Low Output Impedance: 7Ω (typ.)
- High Speed t_R, t_F:
  - < 30ns with 1000pF Load
- Short Delay Times: < 30ns
- Wide Operating Range: 4.5V to 18V
- Latch-Up Protected:
  - Will Withstand > 500mA
  - Reverse Current (Either Polarity)
- Input Withstands Negative Swings –
  - Up to -5V

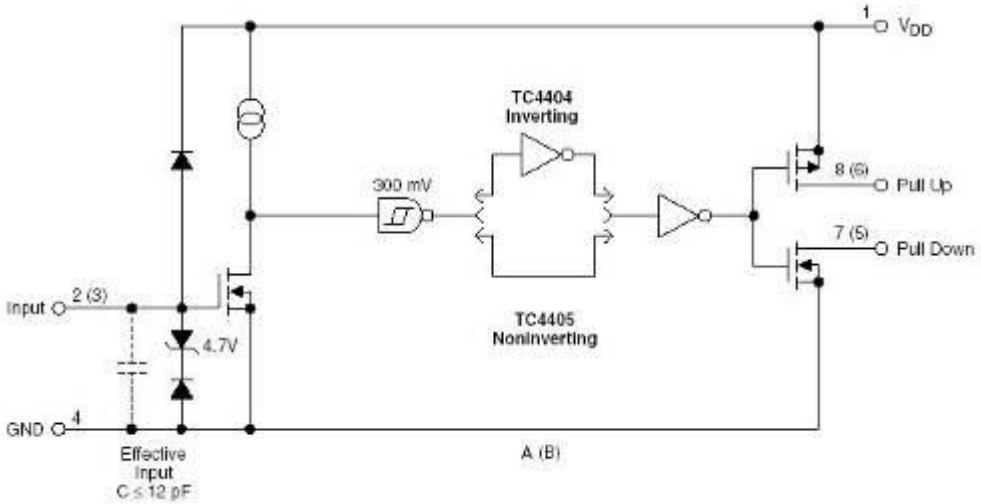

<< BACK

TC4426A/27A/28A

1.5A Dual High-Speed Power MOSFET Drivers

Recommended for Automotive Designs

Online Datasheet

Features:

- High Peak Output Current: 1.5A
- Wide Input Supply Voltage Operating Range:
  - 4.5V to 18V
- High Capacitive Load Drive Capability:
  - 1000pF in 25ns (typ.)
- Short Delay Times: 30ns (typ.)
- Matched Rise, Fall and Delay Times
- Low Supply Current:
  - With Logic '1' Input: 1mA (typ.)
  - With Logic '0' Input: 100µA (typ.)
- Low Output Impedance: 7Ω (typ.)
- Latch-Up Protected: Will Withstand 0.5A –
  - Reverse Current
- Input Will Withstand Negative Inputs Up to 5V
- ESD Protected: 4kV
- Pin-compatible with TC426/27/28 and -
  - TC4426/27/28
- 8-Pin MSOP and 8-Pin 6x5 DFN Packages
- Recommended for Automotive Design (TC4426A/27/28)

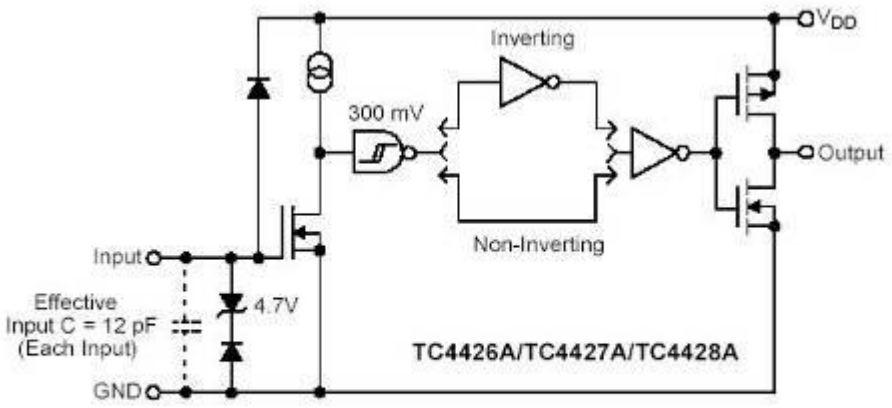

Note 1: TC4426A has two inverting drivers; TC4427A has two non-inverting drivers; TC4428A has one inverting and one non-inverting driver.

2: Ground any unused driver input.

<< BACK

MCP14A0153/4/5

1.5A Dual MOSFET Driver with Low Threshold Input and Enable

Online Datasheet

Features:

- High Peak Output Current:
  - 1.5A (typical)
- Wide Input Supply Voltage Operating Range:
  - 4.5V to 18V
- Low Shoot-Through/Cross-Conduction –
  - Current in Output Stage
- High Capacitive Load Drive Capability:
  - 1000 pF in 11.5 ns (typical)
- Short Delay Times: 25 ns (t_{D1}), 24 ns (t_{D2}) –
  - (typical)
- Low Supply Current: 750 µA (typical)
- Low-Voltage Threshold Input and Enable –
  - with Hysteresis
- Latch-Up Protected: Withstands 500 mA –
  - Reverse Current
- Space-Saving Packages:
  - 8-Lead MSOP
  - 8-Lead SOIC
  - 8-Lead 2x3 TDFN

Functional Block Diagram

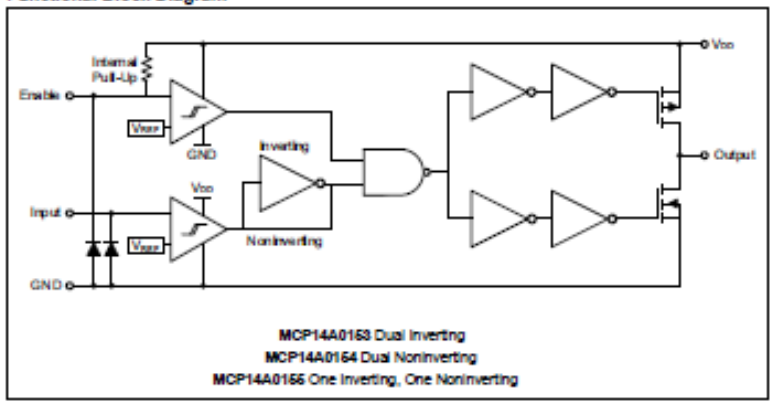

<< BACK

MIC4467/8/9

Quad 1.2A-Peak Low-Side MOSFET Driver

Online Datasheet

Features:

- Built using reliable, low power CMOS –
  - processes
- Latchproof: withstands 500mA inductive –
  - kickback
- Three input logic choices
- Symmetrical rise and fall times 25ns
- Short, equal delay times 75ns
- High peak output current 1.2A
- Wide operating range 4.5 to 18V
- Low equivalent input capacitance (typ) 6pF
- Inputs = Logic 1 for any input from 2.4V to VS
- ESD protected

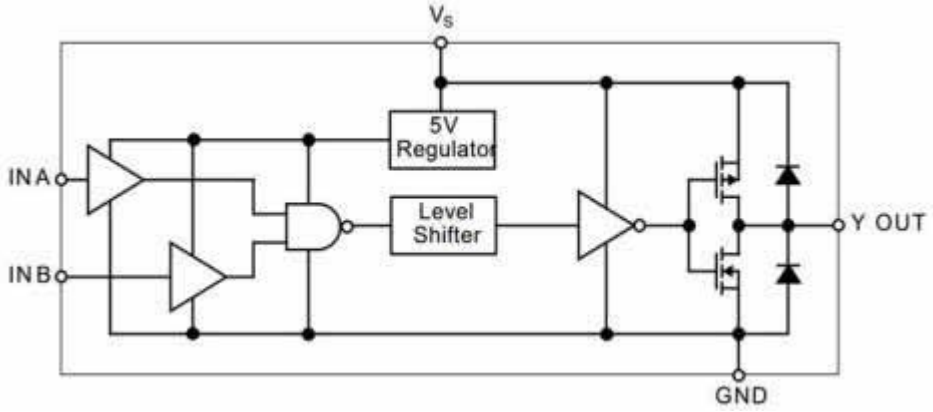

<< BACK

TC4467/8/9

Logic-Input CMOS Quad Drivers

Online Datasheet

Features:

- High Peak Output Current: 1.2A
- Wide Operating Range: 4.5V to 18V
- Symmetrical Rise/Fall Times: 25ns
- Short, Equal Delay Times: 75ns
- Latch-proof. Will Withstand 500mA – - Inductive Kickback
- 3 Input Logic Choices: AND / NAND / - - AND + Inv
- ESD Protection on all pins: 2kV

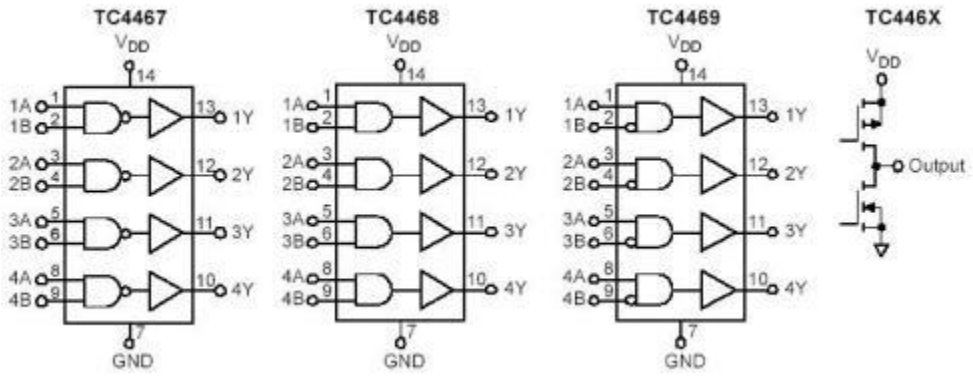

<< BACK

Online Datasheet

Logic-Input CMOS Quad Drivers

Features:

- High Peak Output Current: 1.2A
- Wide Operating Range: 4.5V to 18V
- Symmetrical Rise/Fall Times: 25ns
- Short, Equal Delay Times: 75ns
- Latch-proof. Will Withstand 500mA – - Inductive Kickback
- 3 Input Logic Choices: AND / NAND / - - AND + Inv
- ESD Protection on all pins: 2kV

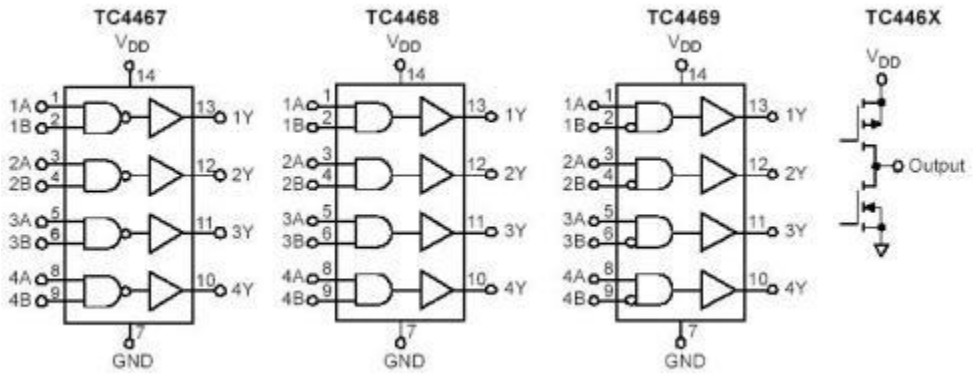

<< BACK

MIC5011

Minimum Parts High- or Low-Side MOSFET Driver

Online Datasheet

Features:

- +4.75V to +32V operation
- Less than 1µA current in the "off" state
- Internal charge pump to drive the gate of an N-channel – power FET above supply
- Available in small outline SOIC packages
- Internal Zener clamp for gate protection
- Minimum external parts count
- Can be used to boost drive to low-side power FETs – - operating on logic supplies
- 25µs typical turn-on time with optional external – - capacitors
- Implements high- or low-side drivers

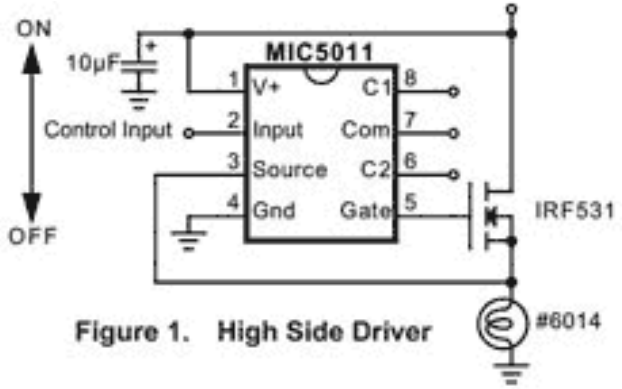

Figure 1. High Side Driver

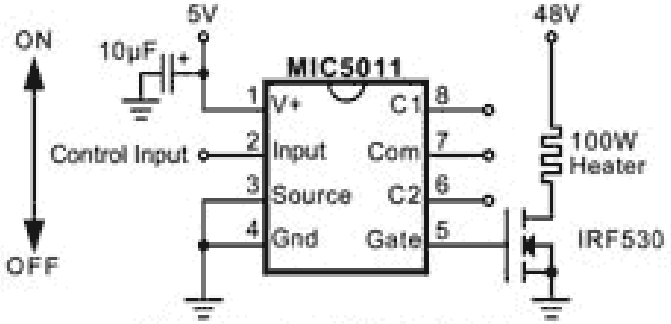

Figure 2. Low Side Driver

<< BACK

MIC5013

Protected High- or Low-Side MOSFET Driver

Online Datasheet

Features:

- +7.0V to +32V operation
- Less than 1µA current in the "off" state
- Internal charge pump to drive the gate of an N – - channel power FET above supply
- Available in small outline SOIC packages
- Internal Zener clamp for gate protection
- 60µs typical turn-on time to 50% gate overdrive
- Programmable over-current sensing
- Dynamic current threshold for high in-rush loads
- Fault output pin indicates current faults
- Implements high- or low-side switches

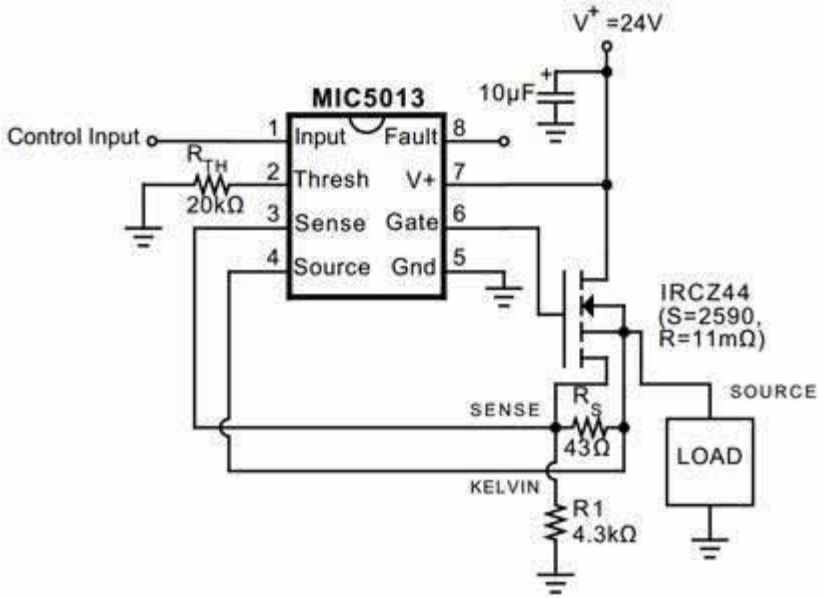

<< BACK

MIC5014/15

Low-Cost High- or Low-Side MOSFET Driver

Online Datasheet

Features:

- +2.75V to +30V operation
- 100µA maximum supply current (5V supply)
- 15µA typical off-state current
- Internal charge pump
- TTL compatible input
- Withstands 60V transient (load dump)
- Reverse battery protected to –20V
- Inductive spike protected to –20V
- Overvoltage shutdown at 35V
- Internal 15V gate protection
- Minimum external parts
- Operates in high-side or low-side configurations
- 1µA control input pull-off
- MIC5015: Inverting
- MIC5014: Non-inverting versions

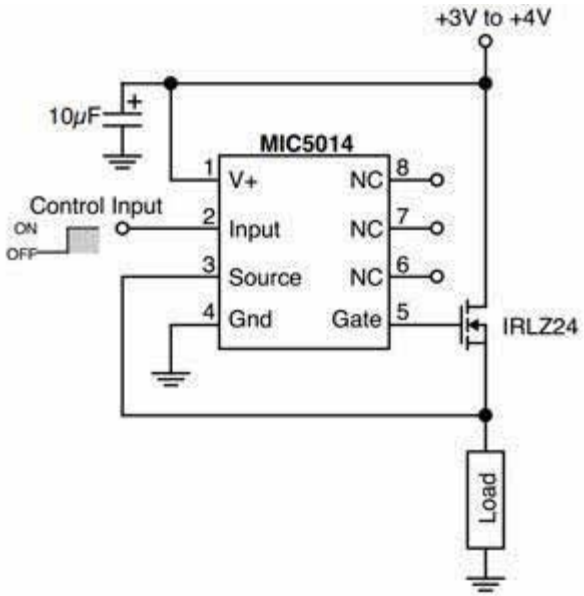

<< BACK

MIC5060

Small High-Side MOSFET Driver

Online Datasheet

Features:

- 2.75V to 30V operation
- 100µA maximum supply current (5V supply)
- 15µA typical off-state current
- Internal charge pump
- TTL-compatible input
- Withstands 60V transient (load dump)
- Reverse battery protected to -20V
- Inductive spike protected to -20V
- Overvoltage shutdown at 35V
- Internal 15V gate protection
- Minimum external parts
- Operates in high-side or low-side configurations
- 1µA control input pull-off
- Available in 8-pin 3mm x 3mm MLF® package

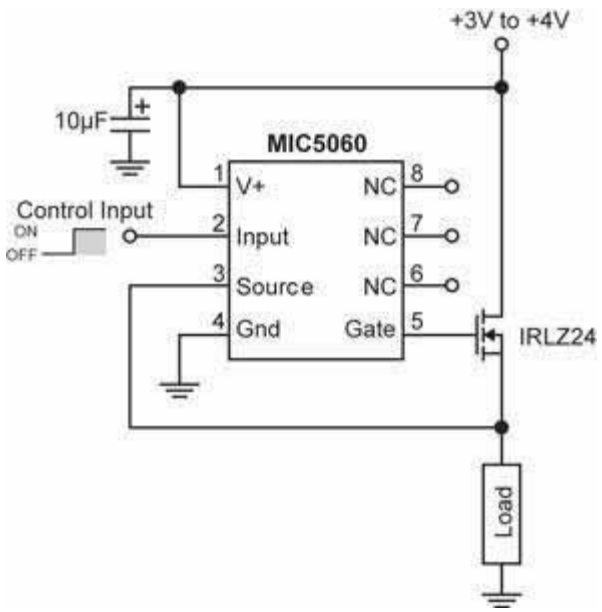

<< BACK

MIC5018

IttyBitty® High-Side MOSFET Driver

Online Datasheet

Features:

- +2.7V to +9V operation
- 150µA typical supply current at 5V supply
- ≤1µA typical standby (off) current
- Charge pump for high-side low-voltage applications
- Internal Zener diode gate-to-ground MOSFET –
  - protection
- Operates in low- and high-side configurations
- TTL compatible input
- ESD protected

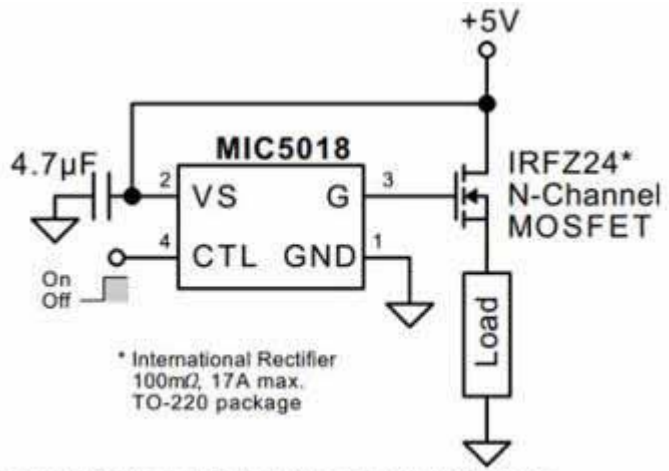

Low-Voltage High-Side Power Switch

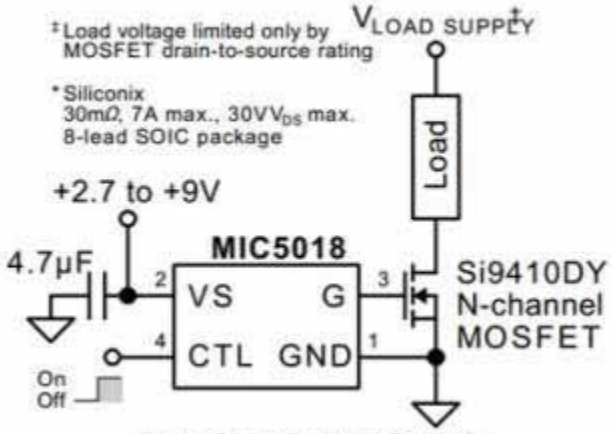

Low-Side Power Switch

<< BACK

MIC5019

Ultra Small High-Side N-Channel MOSFET Driver with Integrated Charge Pump

Online Datasheet

Features:

- 4-pin 1.2mm x 1.2mm Thin QFN Package
- +2.7V to +9V supply voltage range
- 16V gate drive at V_{DD} = 9V
- 8V gate drive at V_{DD} = 2.7V
- Operates in low and high side configurations
- 150µA (typical) supply current at V_{DD} = 5V
- <1µA shutdown supply current
- -40ºC to +125ºC Junction Temperature Range

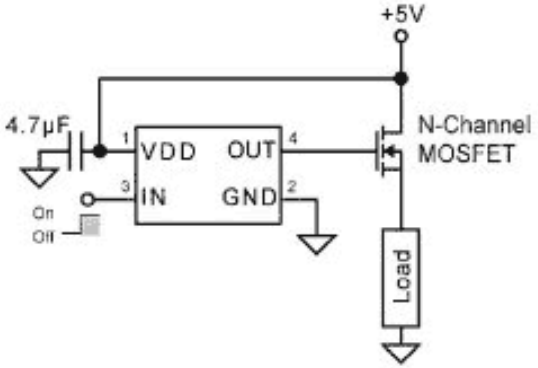

Low-Voltage High-Side Power Switch

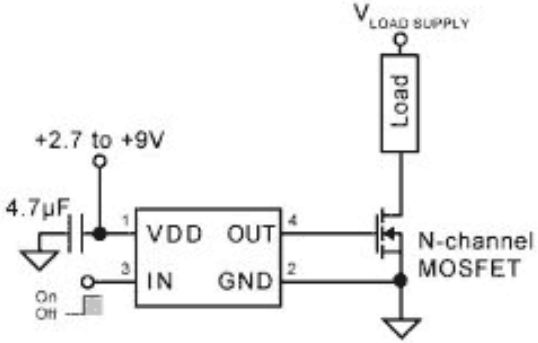

Low-Side Power Switch

<< BACK

MIC4100/1

100V Half Bridge MOSFET Drivers

Online Datasheet

Features:

- Bootstrap supply max voltage to 118V DC
- Supply voltage up to 16V
- Drives high- and low-side N-Channel MOSFETs – - with independent inputs
- CMOS input thresholds (MIC4100)
- TTL input thresholds (MIC4101)
- On-chip bootstrap diode
- Fast 30ns propagation times
- Drives 1000pF load with 10ns rise and fall times
- Low power consumption
- Supply under-voltage protection
- 3Ω pull up, 3Ω pull down output resistance
- Space saving SOIC-8L package
- -40°C to +125°C junction temperature range

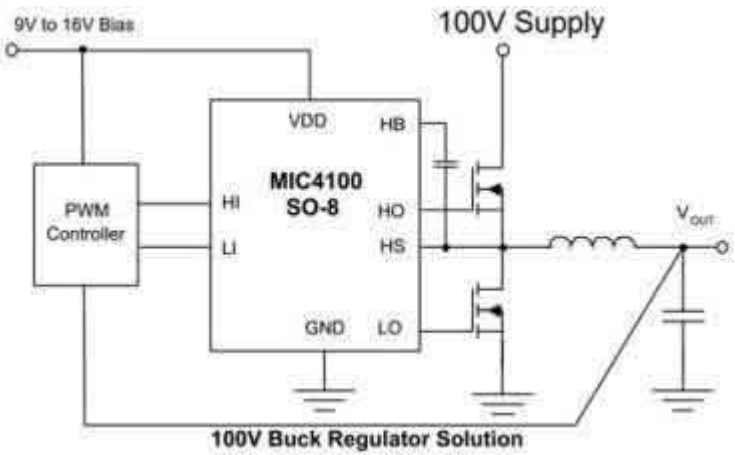

100V Buck Regulator Solution

<< BACK

MICROCHIP

MIC4102

100V Half Bridge MOSFET Driver with Anti-Shoot-Through Protection

Online Datasheet

Features:

- Drives high- and low-side N-Channel MOSFETs –
  - with single input
- Adaptive anti-shoot-through protection
- Low side drive disable pin
- Bootstrap supply voltage to 118V DC
- Supply voltage up to 16V
- TTL input thresholds
- On-chip bootstrap diode
- Fast 30ns propagation times
- Drives 1000pF load with 10ns rise and fall times
- Low power consumption
- Supply under-voltage protection
- 2.5Ω pull up, 1.5Ω pull down output resistance
- Space saving SOIC-8L package
- -40°C to +125°C junction temperature range

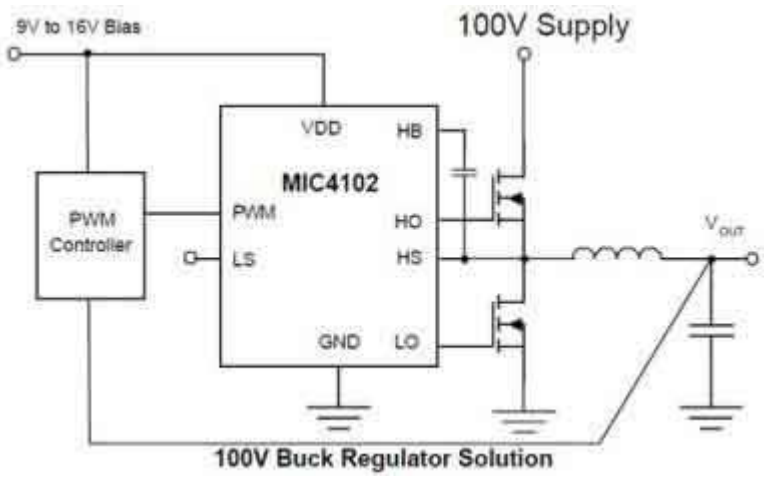

100V Buck Regulator Solution

<< BACK

MIC4103/4

100V Half Bridge MOSFET Drivers 3/2A Sinking/Sourcing Current

Online Datasheet

Features:

- Asymmetrical, low impedance outputs drive –
  - 1000pF load with 10ns rise times and 6ns –
  - fall times
- Bootstrap supply max voltage to 118V DC
- Supply voltage up to 16V
- Drives high- and low-side N-Channel MOSFETs –
  - with independent inputs
- CMOS input thresholds (MIC4103)
- TTL input thresholds (MIC4104)
- On-chip bootstrap diode
- Fast 24ns propagation times
- Low power consumption
- Supply under-voltage protection
- Typical 2.5Ω pull up and 1.25Ω pull down output –
  - driver resistance
- -40°C to +125°C junction temperature range

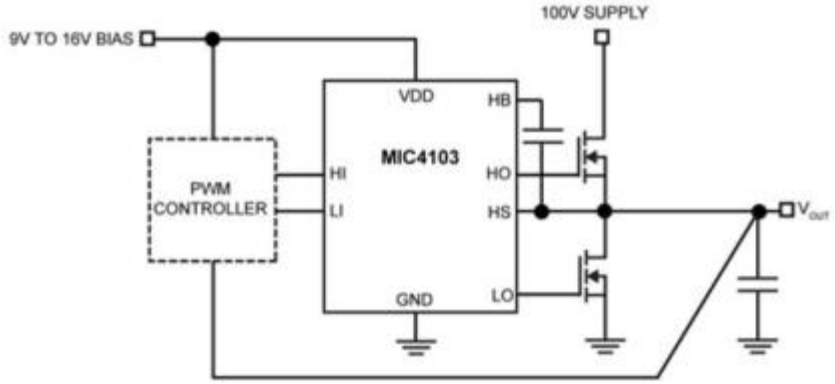

<< BACK

MCP14700

Dual Input Synchronous MOSFET Driver

Recommended for Automotive Designs

Online Datasheet

Features:

- Independent PWM Input Control for –
  - High-Side and Low-Side Gate Drive
- Logic Level Threshold 3.0V TTL Compatible
- Dual Output MOSFET Drive for Synchronous Applications
- High Peak Output Current: 2A (typ.)
- Internal Bootstrap Blocking Device
- +36V BOOT Pin Maximum Rating
- Low Supply Current: 45µA (typ.)
- High Capacitive Load Drive Capability:
  - 3300pF in 10.0ns (typ.)
- Under voltage Lockout Protection
- Over temperature Protection
- Packages: 8-Lead SOIC, 8-Lead 3x3 DFN
- Recommended for Automotive Design

Functional Block Diagram

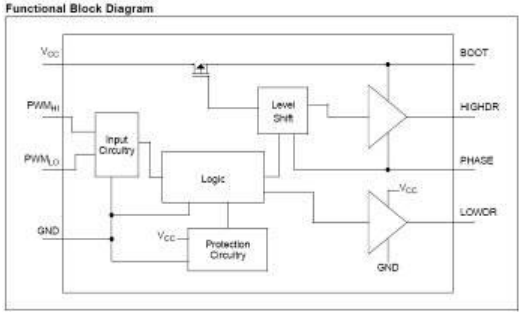

3-Phase BLDC Motor Control Application

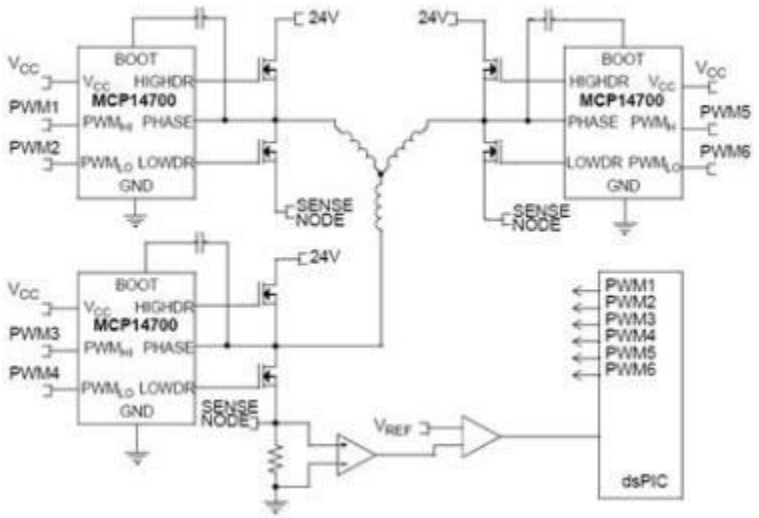

Synchronous Buck Application

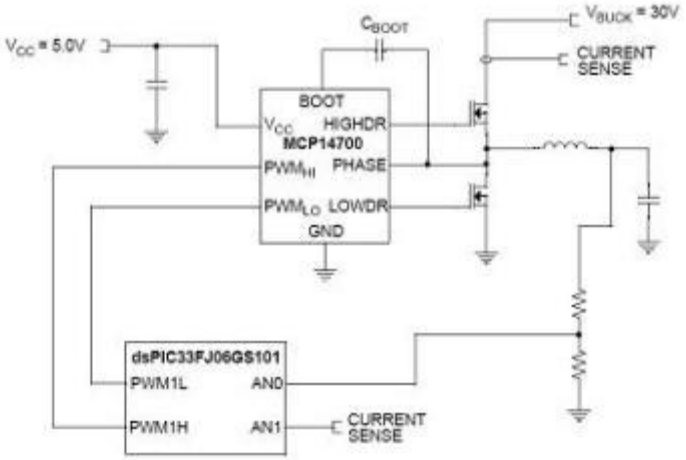

<< BACK to Motor Drivers

<< BACK to Half Bridge Drivers

MCP14628

2A Synchronous Buck Power MOSFET Driver

Online Datasheet

Features:

- Dual Output MOSFET Driver for –
  - Synchronous Applications
- High Peak Output Current: 2A (typ.)
- Adaptive Cross Conduction Protection
- Internal Bootstrap Blocking Device
- +36V BOOT Pin Maximum Rating
- Enhanced Light Load Efficiency Mode
- Low Supply Current: 80µA (typ.)
- High Capacitive Load Drive Capability:
  - 3300pF in 10ns (typ.)
- Tri-State PWM Pin for Power Stage Shutdown
- Input Voltage Under voltage Lockout Protection
- Space Saving Packages:
  - 8-Lead SOIC, 8-Lead 3x3 DFN

Functional Block Diagram

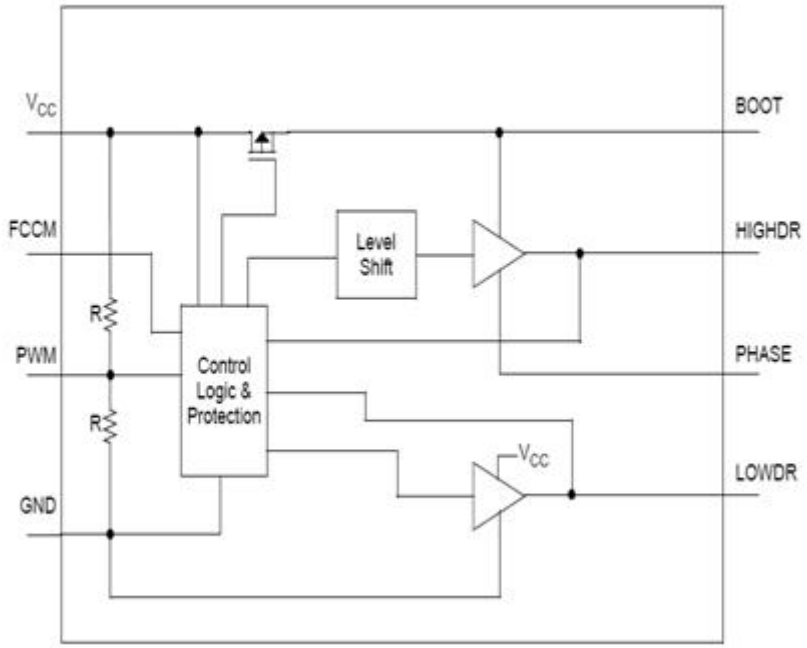

<< BACK to Motor Drivers

<< BACK to Half Bridge MOSFET Drivers

MIC4600

28V Half-Bridge MOSFET Driver

Online Datasheet

Features:

- Adjustable dead time circuitry
- Anti-shoot-through protection
- Internal LDO for single supply operation
- Input voltage range: 4.5V to 28V
- Fast propagation delay: 20ns
- Up to 1.5 MHz operation
- Low voltage logic level inputs for µC or –
  - FPGA driven power solutions
- Independent inputs for low and high side –
  - drivers
- 2Ω gate drive capable of driving 3000pF –
  - load with 15ns rise and fall times
- Low 450µA typical quiescent current
- 3mm x 3mm QFN package
- -40°C to +125°C junction temperature range

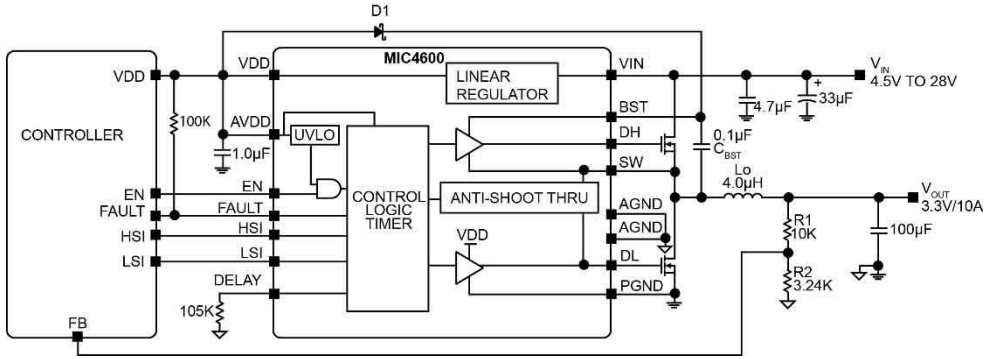

<< BACK

MIC4605

85V Half-Bridge MOSFET Driver, Adaptive Dead Time, Shoot-Thru Protection

Recommended for Automotive Designs

Online Datasheet

Features:

- 5.5V to 16V gate drive supply voltage –
  - range
- Advanced adaptive-dead-time
- Intelligent shoot-through protection
- MIC4605-1: Dual TTL inputs
- MIC4605-2: Single PWM input
- Enable input for on/off control
- On-chip bootstrap diode
- Fast 35ns propagation times
- Drives 1000pF load with 20ns rise –
  - and fall times
- Low power consumption: 135µA quiescent current
- Separate high- and low-side under-voltage protection
- -40°C to +125°C junction temperature range

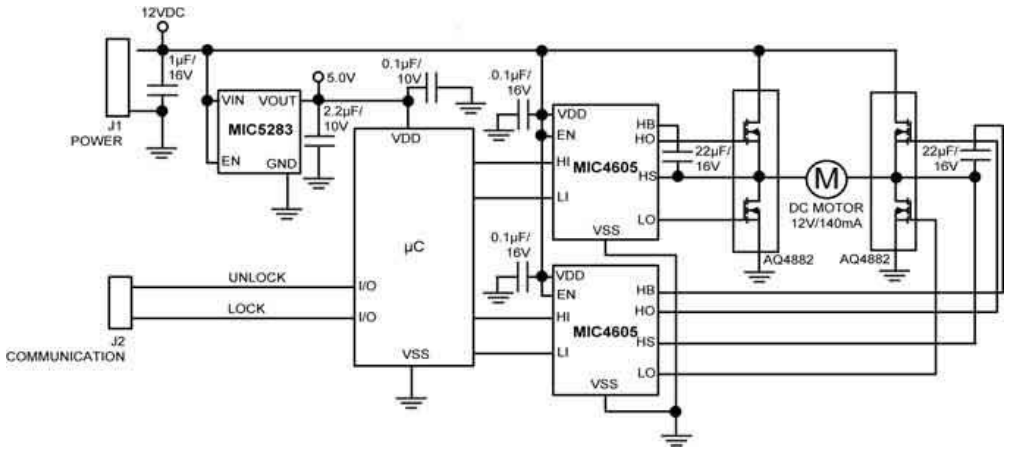

<< BACK to Motor Drivers

<< BACK to Half Bridge MOSFET Drivers

MIC4604

85V Half Bridge MOSFET Drivers with Programmable Gate Drive

Online Datasheet

Features:

- 5.5V to 16V gate drive supply voltage range
- Drives high-side and low-side N-Channel –
  - MOSFETs with independent inputs
- TTL input thresholds
- On chip bootstrap diode
- Fast 39ns propagation times
- Drives 1000pF load with 20ns rise and –
  - fall times
- Low power consumption
- Supplies under-voltage protection
- -40°C to +125°C junction temperature range

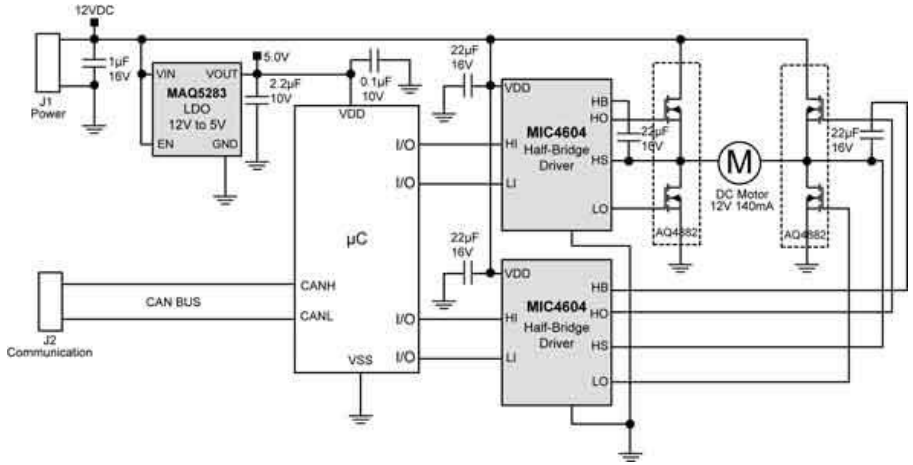

<< BACK to Motor Drivers

<< BACK to Half Bridge MOSFET Drivers

TC4626/7

Power CMOS Drivers w/ Voltage Tripler

Online Datasheet

Features:

- Power Driver With On Board Voltage Booster
- Low I_{DD}: <4mA
- Small Package: 8-Pin PDIP
- Under-Voltage Circuitry
- Fast Rise-Fall Time: <40ns @1000pF
- Below-Rail Input Protection

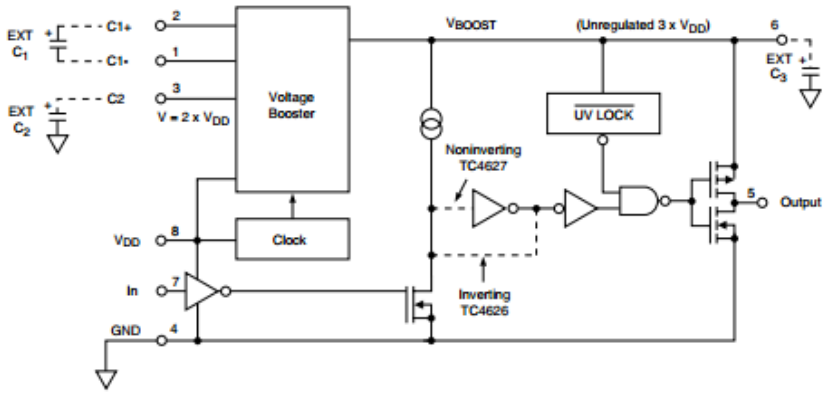

<< BACK

MICROCHIP

MIC5021

High-Speed High-Side MOSFET Driver

Online Datasheet

Features:

- 12V to 36V operation
- 550ns rise/fall time driving 2000pF
- TTL compatible input with internal pull-down –
  - resistor
- Overcurrent limit
- Gate to source protection
- Internal charge pump
- 100kHz operation guaranteed over full –
  - temperature and operating voltage range
- Compatible with current sensing MOSFETs
- Current source drive reduces EMI

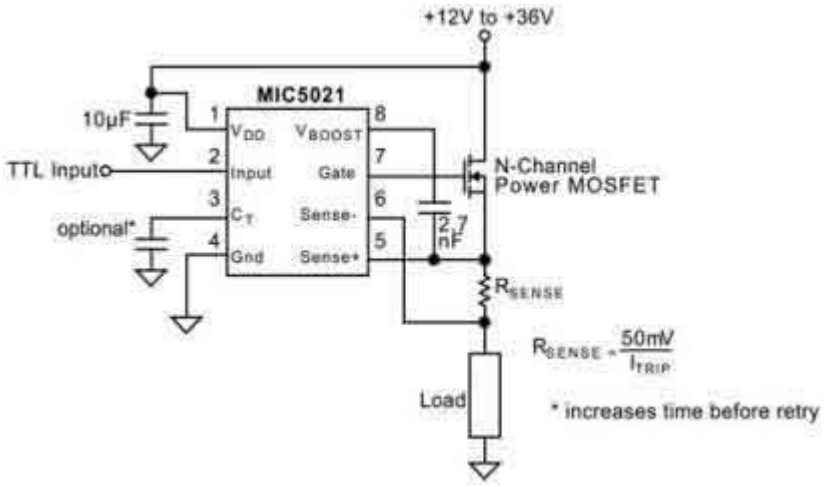

<< BACK