L78

Positive voltage regulator ICs

Datasheet - production data

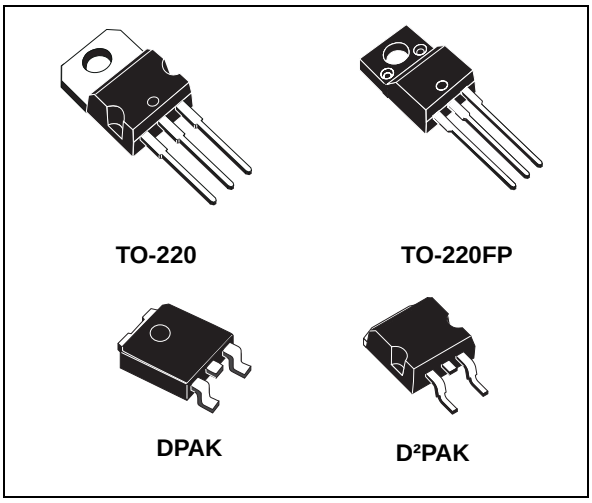

Features

- Output current up to 1.5 A
- Output voltages of 5; 6; 8; 8.5; 9; 12; 15; 18; 24 V
- Thermal overload protection
- Short circuit protection
- Output transition SOA protection
- 2 % output voltage tolerance (A version)
- Guaranteed in extended temperature range (A version)

Description

The L78 series of three-terminal positive regulators is available in TO-220, TO-220FP, D²PAK and DPAK packages and several fixed output voltages, making it useful in a wide range of applications.

These regulators can provide local on-card regulation, eliminating the distribution problems associated with single point regulation. Each type embeds internal current limiting, thermal shut-down and safe area protection, making it essentially indestructible. If adequate heat sinking is provided, they can deliver over 1 A output current. Although designed primarily as fixed voltage regulators, these devices can be used with external components to obtain adjustable voltage and currents.

This is information on a product in full production. www.st.com

sales@prom-elec.com / ООО ПРОМЭЛЕКТРОНИКА

Contents

1 Diagram 5

2 Pin configuration 6

3 Maximum ratings 7

4 Test circuits 8

5 Electrical characteristics 9

6 Application information 25

6.1 Design consideration 25

7 Typical performance 35

8 Package mechanical data 37

9 Packaging mechanical data 52

10 Order codes 55

11 Revision history 57

List of tables

Table 1. Absolute maximum ratings . . . 7
Table 2. Thermal data. . . . 7
Table 3. Electrical characteristics of L7805A . . . 9
Table 4. Electrical characteristics of L7806A . . . 10
Table 5. Electrical characteristics of L7808A . . . 11
Table 6. Electrical characteristics of L7809A . . . 12
Table 7. Electrical characteristics of L7812A . . . 13
Table 8. Electrical characteristics of L7815A . . . 14
Table 9. Electrical characteristics of L7824A . . . 15
Table 10. Electrical characteristics of L7805C . . . 16
Table 11. Electrical characteristics of L7806C . . . 17
Table 12. Electrical characteristics of L7808C . . . 18
Table 13. Electrical characteristics of L7885C . . . 19
Table 14. Electrical characteristics of L7809C . . . 20
Table 15. Electrical characteristics of L7812C . . . 21
Table 16. Electrical characteristics of L7815C . . . 22
Table 17. Electrical characteristics of L7818C . . . 23
Table 18. Electrical characteristics of L7824C . . . 24
Table 19. TO-220 (dual gauge) mechanical data . . . 39
Table 20. TO-220 SG (single gauge) mechanical data . . . 41
Table 21. TO-220FP mechanical data . . . 43
Table 22. DPAK mechanical data. . . . 45
Table 23. D²PAK (SMD 2L STD-ST) mechanical data . . . 48
Table 24. D²PAK (SMD 2L Wooseok-subcon.) mechanical data . . . 50
Table 25. DPAK and D²PAK tape and reel mechanical data . . . 54
Table 26. Order codes . . . 55
Table 27. Document revision history . . . 57

List of figures

Figure 1. Block diagram . . . 5
Figure 2. Pin connections (top view) . . . 6
Figure 3. Schematic diagram . . . 6
Figure 4. Application circuits . . . 7
Figure 5. DC parameter . . . 8
Figure 6. Load regulation . . . 8
Figure 7. Ripple rejection . . . 8
Figure 8. Fixed output regulator . . . 25
Figure 9. Current regulator . . . 26
Figure 10. Circuit for increasing output voltage . . . 26
Figure 11. Adjustable output regulator (7 to 30 V) . . . 27
Figure 12. 0.5 to 10 V regulator . . . 27
Figure 13. High current voltage regulator . . . 28
Figure 14. High output current with short circuit protection . . . 28
Figure 15. Tracking voltage regulator . . . 29
Figure 16. Split power supply (± 15 V - 1 A) . . . 29
Figure 17. Negative output voltage circuit . . . 30
Figure 18. Switching regulator . . . 30
Figure 19. High input voltage circuit (configuration 1) . . . 30
Figure 20. High input voltage circuit (configuration 2) . . . 31
Figure 21. High input and output voltage . . . 31
Figure 22. Reducing power dissipation with dropping resistor . . . 31
Figure 23. Remote shutdown . . . 32
Figure 24. Power AM modulator (unity voltage gain, I_O £ 0.5) . . . 32
Figure 25. Adjustable output voltage with temperature compensation . . . 33
Figure 26. Light controllers ($V_{O(min)} = V_{XX} + V_{BE}$) . . . 33
Figure 27. Protection against input short-circuit with high capacitance loads . . . 34
Figure 28. Dropout voltage vs. junction temperature . . . 35
Figure 29. Peak output current vs. input/output differential voltage . . . 35
Figure 30. Supply voltage rejection vs. frequency . . . 35
Figure 31. Output voltage vs. junction temperature . . . 35
Figure 32. Output impedance vs. frequency . . . 36
Figure 33. Quiescent current vs. junction temp. . . . 36
Figure 34. Load transient response . . . 36
Figure 35. Line transient response . . . 36
Figure 36. Quiescent current vs. input voltage . . . 36
Figure 37. TO-220 (dual gauge) drawing . . . 38
Figure 38. TO-220 SG (single gauge) drawing . . . 40
Figure 39. TO-220FP drawing . . . 42
Figure 40. DPAK drawing . . . 44
Figure 41. DPAK footprint . . . 46
Figure 42. D^2PAK (SMD 2L STD-ST) type A drawing . . . 47
Figure 43. D^2PAK (SMD 2L Wooseok-subcon.) drawing . . . 49
Figure 44. D^2PAK (SMD 2L Wooseok-subcon.) footprint . . . 51
Figure 45. Tube for TO-220 (dual gauge) (mm.) . . . 52
Figure 46. Tube for TO-220 (single gauge) (mm.) . . . 52
Figure 47. Tape for DPAK and D^2PAK . . . 53
Figure 48. Reel for DPAK and D^2PAK . . . 53

1 Diagram

Figure 1. Block diagram

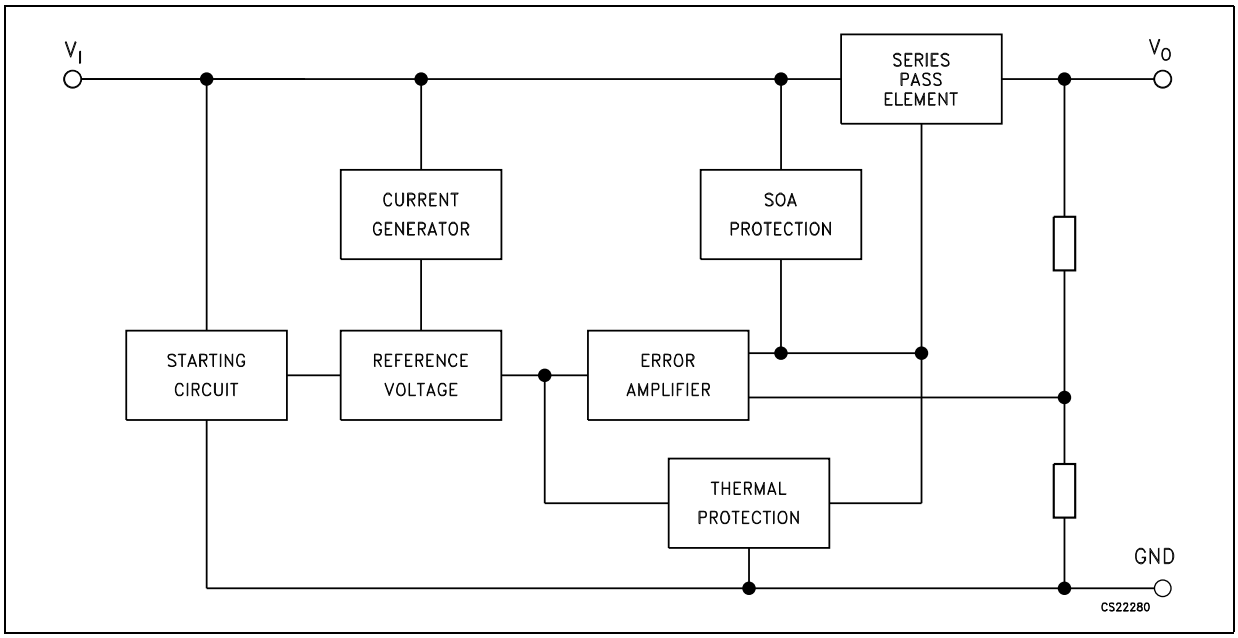

2 Pin configuration

Figure 2. Pin connections (top view)

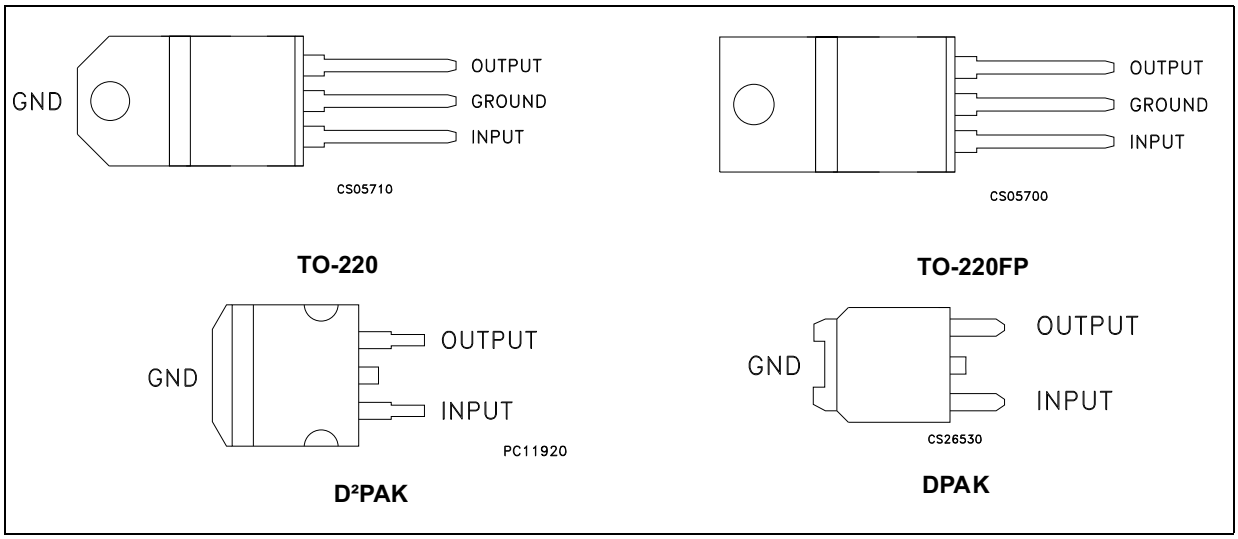

Figure 3. Schematic diagram

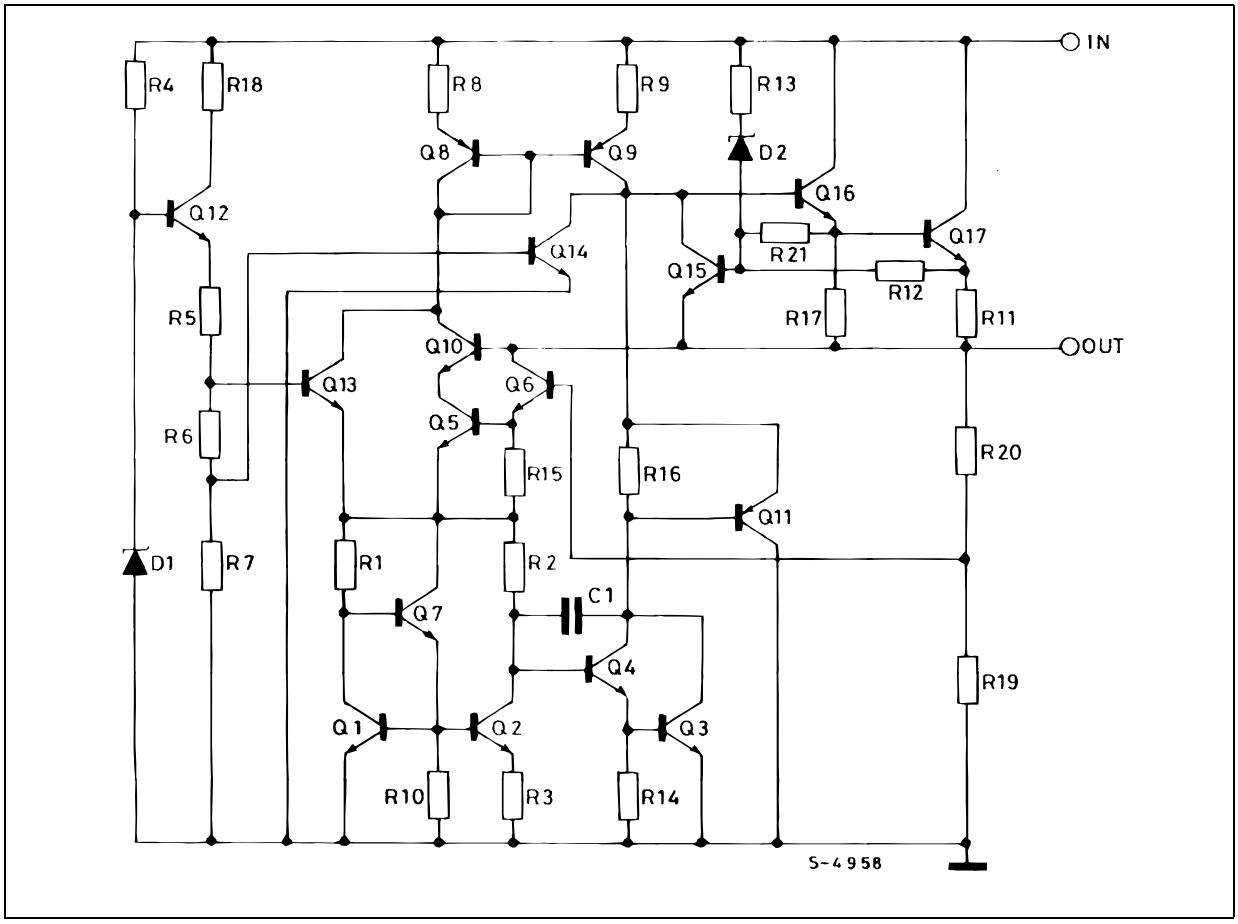

3 Maximum ratings

Table 1. Absolute maximum ratings

Symbol	Parameter		Value	Unit
V_I	DC input voltage	for V_O= 5 to 18 V	35	V
		for V_O= 20, 24 V	40	
I_O	Output current		Internally limited	
P_D	Power dissipation		Internally limited	
T_{STG}	Storage temperature range		-65 to 150	°C
T_{OP}	Operating junction temperature range	for L78xxC, L78xxAC	0 to 125	°C
		for L78xxAB	-40 to 125	

Note: Absolute maximum ratings are those values beyond which damage to the device may occur. Functional operation under these condition is not implied.

Table 2. Thermal data

Symbol	Parameter	D²PAK	DPAK	TO-220	TO-220FP	Unit
R_{thJC}	Thermal resistance junction-case	3	8	5	5	°C/W
R_{thJA}	Thermal resistance junction-ambient	62.5	100	50	60	°C/W

Figure 4. Application circuits

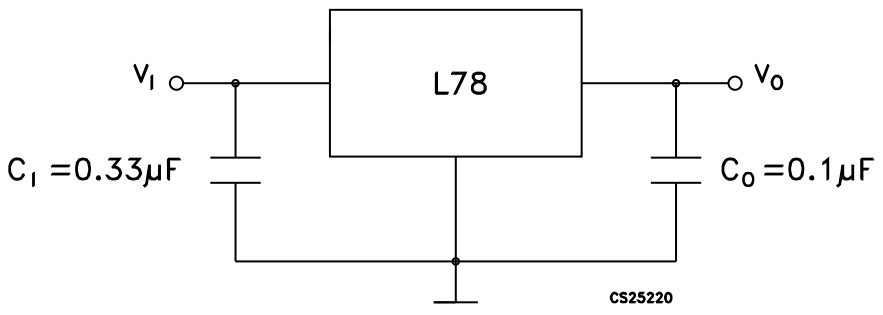

4 Test circuits

Figure 5. DC parameter

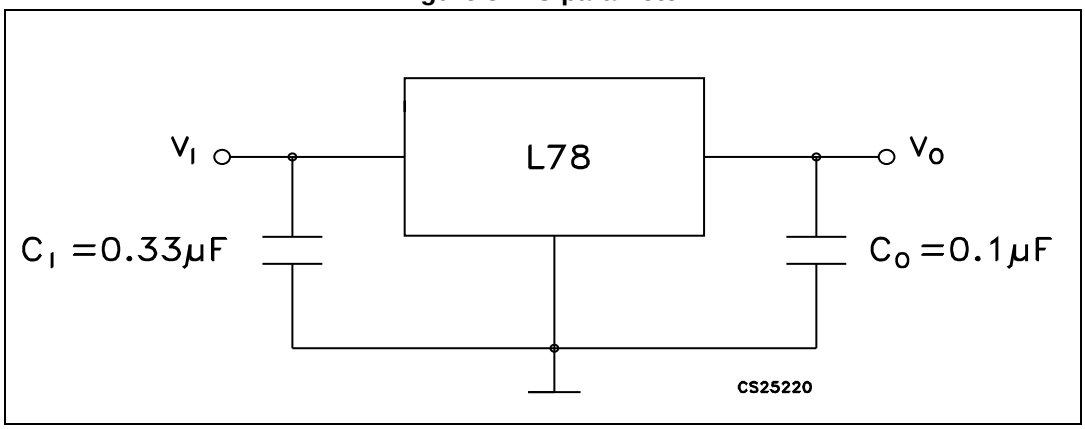

Figure 6. Load regulation

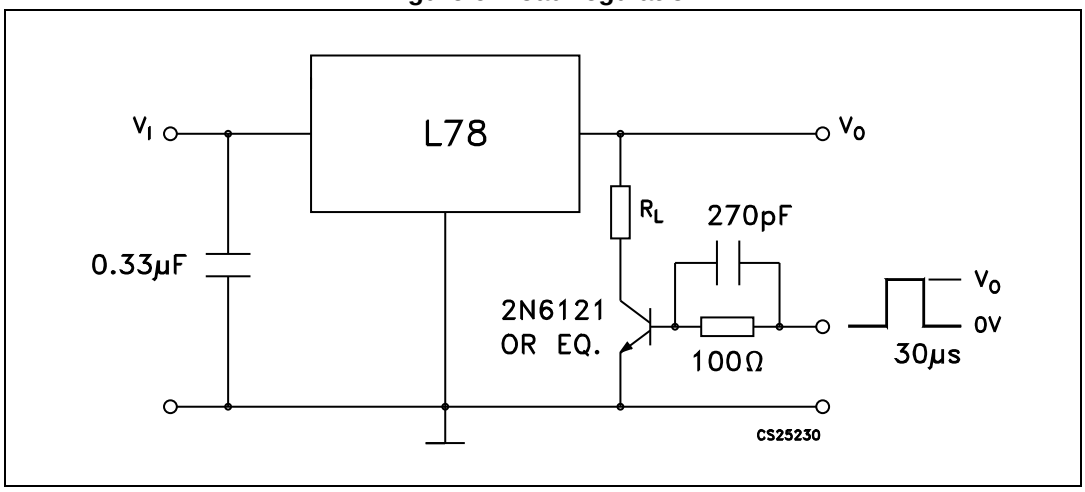

Figure 7. Ripple rejection

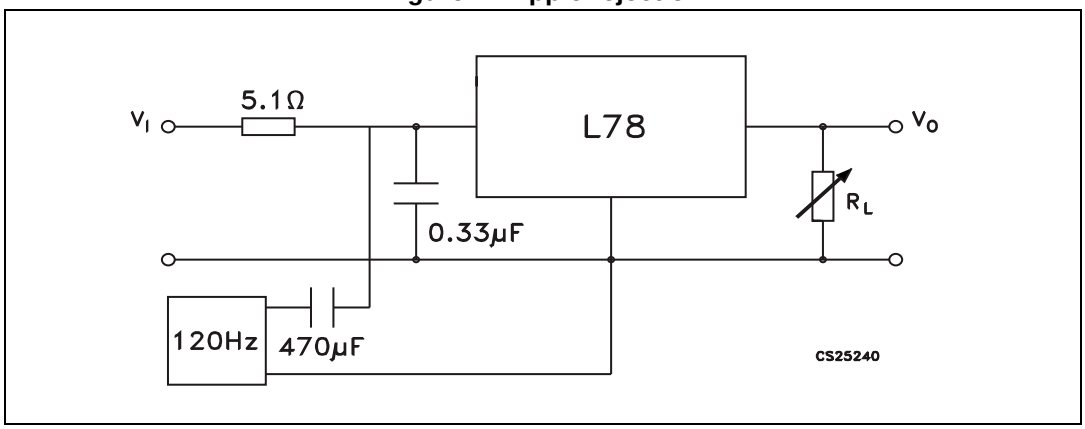

5 Electrical characteristics

V_I = 10 V, I_O = 1 A, T_J = 0 to 125 °C (L7805AC), T_J = -40 to 125 °C (L7805AB), unless otherwise specified[(a)].

Table 3. Electrical characteristics of L7805A

Symbol	Parameter	Test conditions	Min.	Typ.	Max.	Unit
V_O	Output voltage	T_J = 25°C	4.9	5	5.1	V
V_O	Output voltage	I_O = 5 mA to 1 A, V_I = 7.5 to 18 V	4.8	5	5.2	V
V_O	Output voltage	I_O = 1 A, V_I = 18 to 20 V, T_J = 25°C	4.8	5	5.2	V
ΔV_O (1)	Line regulation	V_I = 7.5 to 25 V, I_O = 500 mA, T_J = 25°C		7	50	mV
		V_I = 8 to 12 V		10	50	mV
		V_I = 8 to 12 V, T_J = 25°C		2	25	mV
		V_I = 7.3 to 20 V, T_J = 25°C		7	50	mV
ΔV_O (1)	Load regulation	I_O = 5 mA to 1 A		25	100	mV
		I_O = 5 mA to 1.5 A, T_J = 25°C		30	100	
		I_O = 250 to 750 mA		8	50	
I_q	Quiescent current	T_J = 25°C		4.3	6	mA
					6	mA
ΔI_q	Quiescent current change	V_I = 8 to 23 V, I_O = 500 mA			0.8	mA
		V_I = 7.5 to 20 V, T_J = 25°C			0.8	mA
		I_O = 5 mA to 1 A			0.5	mA
SVR	Supply voltage rejection	V_I = 8 to 18 V, f = 120 Hz, I_O = 500 mA		68		dB
V_d	Dropout voltage	I_O = 1 A, T_J = 25°C		2		V
eN	Output noise voltage	T_A = 25°C, B =10 Hz to 100 kHz		10		µV/V_O
R_O	Output resistance	f = 1 kHz		17		mΩ
I_{sc}	Short circuit current	V_I = 35 V, T_A = 25°C		0.2		A
I_{scp}	Short circuit peak current	T_J = 25°C		2.2		A
$\Delta V_O/\Delta T$	Output voltage drift			-1.1		mV/°C

1. Load and line regulation are specified at constant junction temperature. Changes in V_O due to heating effects must be taken into account separately. Pulse testing with low duty cycle is used.

a. Minimum load current for regulation is 5 mA.

V_I = 11 V, I_O = 1 A, T_J = 0 to 125 °C (L7806AC), T_J = -40 to 125 °C (L7806AB), unless otherwise specified[(b)].

Table 4. Electrical characteristics of L7806A

Symbol	Parameter	Test conditions	Min.	Typ.	Max.	Unit
V_O	Output voltage	T_J = 25°C	5.88	6	6.12	V
V_O	Output voltage	I_O = 5 mA to 1 A, V_I = 8.6 to 19 V	5.76	6	6.24	V
V_O	Output voltage	I_O = 1 A, V_I = 19 to 21 V, T_J = 25°C	5.76	6	6.24	V
ΔV_O (1)	Line regulation	V_I = 8.6 to 25 V, I_O = 500 mA, T_J = 25°C		9	60	mV
		V_I = 9 to 13 V		11	60	mV
		V_I = 9 to 13 V, T_J = 25°C		3	30	mV
		V_I = 8.3 to 21 V, T_J = 25°C		9	60	mV
ΔV_O (1)	Load regulation	I_O = 5 mA to 1 A		25	100	mV
		I_O = 5 mA to 1.5 A, T_J = 25°C		30	100	
		I_O = 250 to 750 mA		10	50	
I_q	Quiescent current	T_J = 25°C		4.3	6	mA
					6	mA
ΔI_q	Quiescent current change	V_I = 9 to 24 V, I_O = 500 mA			0.8	mA
		V_I = 8.6 to 21 V, T_J = 25°C			0.8	mA
		I_O = 5 mA to 1 A			0.5	mA
SVR	Supply voltage rejection	V_I = 9 to 19 V, f = 120 Hz, I_O = 500 mA		65		dB
V_d	Dropout voltage	I_O = 1 A, T_J = 25°C		2		V
eN	Output noise voltage	T_A = 25°C, B =10 Hz to 100 kHz		10		µV/V_O
R_O	Output resistance	f = 1 kHz		17		mΩ
I_{sc}	Short circuit current	V_I = 35 V, T_A = 25°C		0.2		A
I_{scp}	Short circuit peak current	T_J = 25°C		2.2		A
$\Delta V_O/\Delta T$	Output voltage drift			-0.8		mV/°C

1. Load and line regulation are specified at constant junction temperature. Changes in V_O due to heating effects must be taken into account separately. Pulse testing with low duty cycle is used.

b. Minimum load current for regulation is 5 mA.

V_I = 14 V, I_O = 1 A, T_J = 0 to 125 °C (L7808AC), T_J = -40 to 125 °C (L7808AB), unless otherwise specified[c].

Table 5. Electrical characteristics of L7808A

Symbol	Parameter	Test conditions	Min.	Typ.	Max.	Unit
V_O	Output voltage	T_J = 25°C	7.84	8	8.16	V
V_O	Output voltage	I_O = 5 mA to 1 A, V_I = 10.6 to 21 V	7.7	8	8.3	V
V_O	Output voltage	I_O = 1 A, V_I = 21 to 23 V, T_J = 25°C	7.7	8	8.3	V
ΔV_O (1)	Line regulation	V_I = 10.6 to 25 V, I_O = 500 mA, T_J = 25°C		12	80	mV
		V_I = 11 to 17 V		15	80	mV
		V_I = 11 to 17 V, T_J = 25°C		5	40	mV
		V_I = 10.4 to 23 V, T_J = 25°C		12	80	mV
ΔV_O (1)	Load regulation	I_O = 5 mA to 1 A		25	100	mV
		I_O = 5 mA to 1.5 A, T_J = 25°C		30	100	
		I_O = 250 to 750 mA		10	50	
I_q	Quiescent current	T_J = 25°C		4.3	6	mA
					6	mA
ΔI_q	Quiescent current change	V_I = 11 to 23 V, I_O = 500 mA			0.8	mA
		V_I = 10.6 to 23 V, T_J = 25°C			0.8	mA
		I_O = 5 mA to 1 A			0.5	mA
SVR	Supply voltage rejection	V_I = 11.5 to 21.5 V, f = 120 Hz, I_O = 500 mA		62		dB
V_d	Dropout voltage	I_O = 1 A, T_J = 25°C		2		V
eN	Output noise voltage	T_A = 25°C, B =10 Hz to 100 kHz		10		µV/V_O
R_O	Output resistance	f = 1 kHz		18		mΩ
I_{sc}	Short circuit current	V_I = 35 V, T_A = 25°C		0.2		A
I_{scp}	Short circuit peak current	T_J = 25°C		2.2		A
$\Delta V_O/\Delta T$	Output voltage drift			-0.8		mV/°C

1. Load and line regulation are specified at constant junction temperature. Changes in V_O due to heating effects must be taken into account separately. Pulse testing with low duty cycle is used.

c. Minimum load current for regulation is 5 mA.

V_I = 15 V, I_O = 1 A, T_J = 0 to 125 °C (L7809AC), T_J = -40 to 125 °C (L7809AB), unless otherwise specified[(d)].

Table 6. Electrical characteristics of L7809A

Symbol	Parameter	Test conditions	Min.	Typ.	Max.	Unit
V_O	Output voltage	T_J = 25°C	8.82	9	9.18	V
V_O	Output voltage	I_O = 5 mA to 1 A, V_I = 10.6 to 22 V	8.65	9	9.35	V
V_O	Output voltage	I_O = 1 A, V_I = 22 to 24 V, T_J = 25°C	8.65	9	9.35	V
ΔV_O (1)	Line regulation	V_I = 10.6 to 25 V, I_O = 500 mA, T_J = 25°C		12	90	mV
		V_I = 11 to 17 V		15	90	mV
		V_I = 11 to 17 V, T_J = 25°C		5	45	mV
		V_I = 11.4 to 23 V, T_J = 25°C		12	90	mV
ΔV_O (1)	Load regulation	I_O = 5 mA to 1 A		25	100	mV
		I_O = 5 mA to 1.5 A, T_J = 25°C		30	100	
		I_O = 250 to 750 mA		10	50	
I_q	Quiescent current	T_J = 25°C		4.3	6	mA
					6	mA
ΔI_q	Quiescent current change	V_I = 11 to 25 V, I_O = 500 mA			0.8	mA
		V_I = 10.6 to 23 V, T_J = 25°C			0.8	mA
		I_O = 5 mA to 1 A			0.5	mA
SVR	Supply voltage rejection	V_I = 11.5 to 21.5 V, f = 120 Hz, I_O = 500 mA		61		dB
V_d	Dropout voltage	I_O = 1 A, T_J = 25°C		2		V
eN	Output noise voltage	T_A = 25°C, B =10 Hz to 100 kHz		10		µV/V_O
R_O	Output resistance	f = 1 kHz		18		mΩ
I_{sc}	Short circuit current	V_I = 35 V, T_A = 25°C		0.2		A
I_{scp}	Short circuit peak current	T_J = 25°C		2.2		A
$\Delta V_O/\Delta T$	Output voltage drift			-0.8		mV/°C

1. Load and line regulation are specified at constant junction temperature. Changes in V_O due to heating effects must be taken into account separately. Pulse testing with low duty cycle is used.

d. Minimum load current for regulation is 5 mA.

V_I = 19 V, I_O = 1 A, T_J = 0 to 125 °C (L7812AC), T_J = -40 to 125 °C (L7812AB), unless otherwise specified[e].

Table 7. Electrical characteristics of L7812A

Symbol	Parameter	Test conditions	Min.	Typ.	Max.	Unit
V_O	Output voltage	T_J = 25°C	11.75	12	12.25	V
V_O	Output voltage	I_O = 5 mA to 1 A, V_I = 14.8 to 25 V	11.5	12	12.5	V
V_O	Output voltage	I_O = 1 A, V_I = 25 to 27 V, T_J = 25°C	11.5	12	12.5	V
ΔV_O (1)	Line regulation	V_I = 14.8 to 30 V, I_O = 500 mA, T_J = 25°C		13	120	mV
		V_I = 16 to 12 V		16	120	mV
		V_I = 16 to 12 V, T_J = 25°C		6	60	mV
		V_I = 14.5 to 27 V, T_J = 25°C		13	120	mV
ΔV_O (1)	Load regulation	I_O = 5 mA to 1 A		25	100	mV
		I_O = 5 mA to 1.5 A, T_J = 25°C		30	100	
		I_O = 250 to 750 mA		10	50	
I_q	Quiescent current	T_J = 25°C		4.4	6	mA
					6	mA
ΔI_q	Quiescent current change	V_I = 15 to 30 V, I_O = 500 mA			0.8	mA
		V_I = 14.8 to 27 V, T_J = 25°C			0.8	mA
		I_O = 5 mA to 1 A			0.5	mA
SVR	Supply voltage rejection	V_I = 15 to 25 V, f = 120 Hz, I_O = 500 mA		60		dB
V_d	Dropout voltage	I_O = 1 A, T_J = 25°C		2		V
eN	Output noise voltage	T_A = 25°C, B = 10 Hz to 100 kHz		10		µV/V_O
R_O	Output resistance	f = 1 kHz		18		mΩ
I_{sc}	Short circuit current	V_I = 35 V, T_A = 25°C		0.2		A
I_{scp}	Short circuit peak current	T_J = 25°C		2.2		A
$\Delta V_O/\Delta T$	Output voltage drift			-1		mV/°C

1. Load and line regulation are specified at constant junction temperature. Changes in V_O due to heating effects must be taken into account separately. Pulse testing with low duty cycle is used.

e. Minimum load current for regulation is 5 mA.

V_I = 23 V, I_O = 1 A, T_J = 0 to 125 °C (L7815AC), T_J = -40 to 125 °C (L7815AB), unless otherwise specified[(f)].

Table 8. Electrical characteristics of L7815A

Symbol	Parameter	Test conditions	Min.	Typ.	Max.	Unit
V_O	Output voltage	T_J = 25°C	14.7	15	15.3	V
V_O	Output voltage	I_O = 5 mA to 1 A, V_I = 17.9 to 28 V	14.4	15	15.6	V
V_O	Output voltage	I_O = 1 A, V_I = 28 to 30 V, T_J = 25°C	14.4	15	15.6	V
ΔV_O (1)	Line regulation	V_I = 17.9 to 30 V, I_O = 500 mA, T_J = 25°C		13	150	mV
		V_I = 20 to 26 V		16	150	mV
		V_I = 20 to 26 V, T_J = 25°C		6	75	mV
		V_I = 17.5 to 30 V, T_J = 25°C		13	150	mV
ΔV_O (1)	Load regulation	I_O = 5 mA to 1 A		25	100	mV
		I_O = 5 mA to 1.5 A, T_J = 25°C		30	100	
		I_O = 250 to 750 mA		10	50	
I_q	Quiescent current	T_J = 25°C		4.4	6	mA
					6	mA
ΔI_q	Quiescent current change	V_I = 17.5 to 30 V, I_O = 500 mA			0.8	mA
		V_I = 17.5 to 30 V, T_J = 25°C			0.8	mA
		I_O = 5 mA to 1 A			0.5	mA
SVR	Supply voltage rejection	V_I = 18.5 to 28.5 V, f = 120 Hz, I_O = 500 mA		58		dB
V_d	Dropout voltage	I_O = 1 A, T_J = 25°C		2		V
eN	Output noise voltage	T_A = 25°C, B = 10Hz to 100 kHz		10		$\mu V/V_O$
R_O	Output resistance	f = 1 kHz		19		mΩ
I_{sc}	Short circuit current	V_I = 35 V, T_A = 25°C		0.2		A
I_{scp}	Short circuit peak current	T_J = 25°C		2.2		A
$\Delta V_O/\Delta T$	Output voltage drift			-1		mV/°C

1. Load and line regulation are specified at constant junction temperature. Changes in V_O due to heating effects must be taken into account separately. Pulse testing with low duty cycle is used.

f. Minimum load current for regulation is 5 mA.

V_I = 33 V, I_O = 1 A, T_J = 0 to 125 °C (L7824AC), T_J = -40 to 125 °C (L7824AB), unless otherwise specified[g].

Table 9. Electrical characteristics of L7824A

Symbol	Parameter	Test conditions	Min.	Typ.	Max.	Unit
V_O	Output voltage	T_J = 25°C	23.5	24	24.5	V
V_O	Output voltage	I_O = 5 mA to 1 A, V_I = 27.3 to 37 V	23	24	25	V
V_O	Output voltage	I_O = 1 A, V_I = 37 to 38 V, T_J = 25°C	23	24	25	V
ΔV_O (1)	Line regulation	V_I = 27 to 38 V, I_O = 500 mA, T_J = 25°C		31	240	mV
		V_I = 30 to 36 V		35	200	mV
		V_I = 30 to 36 V, T_J = 25°C		14	120	mV
		V_I = 26.7 to 38 V, T_J = 25°C		31	240	mV
ΔV_O (1)	Load regulation	I_O = 5 mA to 1 A		25	100	mV
		I_O = 5 mA to 1.5 A, T_J = 25°C		30	100	
		I_O = 250 to 750 mA		10	50	
I_q	Quiescent current	T_J = 25°C		4.6	6	mA
					6	mA
ΔI_q	Quiescent current change	V_I = 27.3 to 38 V, I_O = 500 mA			0.8	mA
		V_I = 27.3 to 38 V, T_J = 25°C			0.8	mA
		I_O = 5 mA to 1 A			0.5	mA
SVR	Supply voltage rejection	V_I = 28 to 38 V, f = 120 Hz, I_O = 500 mA		54		dB
V_d	Dropout voltage	I_O = 1 A, T_J = 25°C		2		V
eN	Output noise voltage	T_A = 25°C, B = 10 Hz to 100 kHz		10		µV/V_O
R_O	Output resistance	f = 1 kHz		20		mΩ
I_{sc}	Short circuit current	V_I = 35 V, T_A = 25°C		0.2		A
I_{scp}	Short circuit peak current	T_J = 25°C		2.2		A
$\Delta V_O/\Delta T$	Output voltage drift			-1.5		mV/°C

1. Load and line regulation are specified at constant junction temperature. Changes in V_O due to heating effects must be taken into account separately. Pulse testing with low duty cycle is used.

g. Minimum load current for regulation is 5 mA.

Refer to the test circuits, T_J = 0 to 125 °C, V_I = 10 V, I_O = 500 mA, C_I = 0.33 µF, C_O = 0.1 µF unless otherwise specified[h].

Table 10. Electrical characteristics of L7805C

Symbol	Parameter	Test conditions	Min.	Typ.	Max.	Unit
V_O	Output voltage	T_J = 25°C	4.8	5	5.2	V
V_O	Output voltage	I_O = 5 mA to 1 A, V_I = 7 to 18 V	4.75	5	5.25	V
V_O	Output voltage	I_O = 1 A, V_I = 18 to 20V, T_J = 25°C	4.75	5	5.25	V
ΔV_O[1]	Line regulation	V_I = 7 to 25 V, T_J = 25°C		3	100	mV
		V_I = 8 to 12 V, T_J = 25°C		1	50	
ΔV_O[1]	Load regulation	I_O = 5 mA to 1.5 A, T_J = 25°C			100	mV
		I_O = 250 to 750 mA, T_J = 25°C			50	
I_d	Quiescent current	T_J = 25°C			8	mA
ΔI_d	Quiescent current change	I_O = 5 mA to 1 A			0.5	mA
		V_I = 7 to 23 V			0.8	
$\Delta V_O/\Delta T$	Output voltage drift	I_O = 5 mA		-1.1		mV/°C
eN	Output noise voltage	B = 10 Hz to 100 kHz, T_J = 25°C		40		µV/V_O
SVR	Supply voltage rejection	V_I = 8 to 18 V, f = 120 Hz	62			dB
V_d	Dropout voltage	I_O = 1 A, T_J = 25°C		2		V
R_O	Output resistance	f = 1 kHz		17		mΩ
I_{sc}	Short circuit current	V_I = 35 V, T_J = 25°C		0.75		A
I_{scp}	Short circuit peak current	T_J = 25°C		2.2		A

1. Load and line regulation are specified at constant junction temperature. Changes in V_O due to heating effects must be taken into account separately. Pulse testing with low duty cycle is used.

h. Minimum load current for regulation is 5 mA.

Refer to the test circuits, T_J = 0 to 125 °C, V_I = 11 V, I_O = 500 mA, C_I = 0.33 µF, C_O = 0.1 µF unless otherwise specified[i].

Table 11. Electrical characteristics of L7806C

Symbol	Parameter	Test conditions	Min.	Typ.	Max.	Unit
V_O	Output voltage	T_J = 25°C	5.75	6	6.25	V
V_O	Output voltage	I_O = 5 mA to 1 A, V_I = 8 to 19 V	5.7	6	6.3	V
V_O	Output voltage	I_O = 1 A, V_I = 19 to 21 V, T_J = 25°C	5.7	6	6.3	V
ΔV_O[1]	Line regulation	V_I = 8 to 25 V, T_J = 25°C			120	mV
		V_I = 9 to 13 V, T_J = 25°C			60	
ΔV_O[1]	Load regulation	I_O = 5 mA to 1.5 A, T_J = 25°C			120	mV
		I_O = 250 to 750 mA, T_J = 25°C			60	
I_d	Quiescent current	T_J = 25°C			8	mA
ΔI_d	Quiescent current change	I_O = 5 mA to 1 A			0.5	mA
		V_I = 8 to 24 V			1.3	
$\Delta V_O/\Delta T$	Output voltage drift	I_O = 5 mA		-0.8		mV/°C
eN	Output noise voltage	B = 10 Hz to 100 kHz, T_J = 25°C		45		µV/V_O
SVR	Supply voltage rejection	V_I = 9 to 19 V, f = 120 Hz	59			dB
V_d	Dropout voltage	I_O = 1 A, T_J = 25°C		2		V
R_O	Output resistance	f = 1 kHz		19		mΩ
I_{sc}	Short circuit current	V_I = 35 V, T_J = 25°C		0.55		A
I_{scp}	Short circuit peak current	T_J = 25°C		2.2		A

1. Load and line regulation are specified at constant junction temperature. Changes in V_O due to heating effects must be taken into account separately. Pulse testing with low duty cycle is used.

i. Minimum load current for regulation is 5 mA.

Refer to the test circuits, T_J = 0 to 125 °C, V_I = 14 V, I_O = 500 mA, C_I = 0.33 µF, C_O = 0.1 µF unless otherwise specified[j].

Table 12. Electrical characteristics of L7808C

Symbol	Parameter	Test conditions	Min.	Typ.	Max.	Unit
V_O	Output voltage	T_J = 25°C	7.7	8	8.3	V
V_O	Output voltage	I_O = 5 mA to 1 A, V_I = 10.5 to 21 V	7.6	8	8.4	V
V_O	Output voltage	I_O = 1 A, V_I = 21 to 25 V, T_J = 25°C	7.6	8	8.4	V
ΔV_O(1)	Line regulation	V_I = 10.5 to 25 V, T_J = 25°C			160	mV
		V_I = 11 to 17 V, T_J = 25°C			80	
ΔV_O(1)	Load regulation	I_O = 5 mA to 1.5 A, T_J = 25°C			160	mV
		I_O = 250 to 750 mA, T_J = 25°C			80	
I_d	Quiescent current	T_J = 25°C			8	mA
ΔI_d	Quiescent current change	I_O = 5 mA to 1 A			0.5	mA
		V_I = 10.5 to 25 V			1	
$\Delta V_O/\Delta T$	Output voltage drift	I_O = 5 mA		-0.8		mV/°C
eN	Output noise voltage	B = 10 Hz to 100 kHz, T_J = 25°C		52		µV/V_O
SVR	Supply voltage rejection	V_I = 11.5 to 21.5 V, f = 120 Hz	56			dB
V_d	Dropout voltage	I_O = 1 A, T_J = 25°C		2		V
R_O	Output resistance	f = 1 kHz		16		mΩ
I_{sc}	Short circuit current	V_I = 35 V, T_J = 25°C		0.45		A
I_{scp}	Short circuit peak current	T_J = 25°C		2.2		A

1. Load and line regulation are specified at constant junction temperature. Changes in V_O due to heating effects must be taken into account separately. Pulse testing with low duty cycle is used.

j. Minimum load current for regulation is 5 mA.

Refer to the test circuits, T_J = 0 to 125 °C, V_I = 14.5 V, I_O = 500 mA, C_I = 0.33 µF, C_O = 0.1 µF unless otherwise specified[k].

Table 13. Electrical characteristics of L7885C

Symbol	Parameter	Test conditions	Min.	Typ.	Max.	Unit
V_O	Output voltage	T_J = 25°C	8.2	8.5	8.8	V
V_O	Output voltage	I_O = 5 mA to 1 A, V_I = 11 to 21.5 V	8.1	8.5	8.9	V
V_O	Output voltage	I_O = 1 A, V_I = 21.5 to 26 V, T_J = 25°C	8.1	8.5	8.9	V
ΔV_O[1]	Line regulation	V_I = 11 to 27 V, T_J = 25°C			160	mV
		V_I = 11.5 to 17.5 V, T_J = 25°C			80	
ΔV_O[1]	Load regulation	I_O = 5 mA to 1.5 A, T_J = 25°C			160	mV
		I_O = 250 to 750 mA, T_J = 25°C			80	
I_d	Quiescent current	T_J = 25°C			8	mA
ΔI_d	Quiescent current change	I_O = 5 mA to 1 A			0.5	mA
		V_I = 11 to 26 V			1	
$\Delta V_O/\Delta T$	Output voltage drift	I_O = 5 mA		-0.8		mV/°C
eN	Output noise voltage	B = 10 Hz to 100 kHz, T_J = 25°C		55		µV/V_O
SVR	Supply voltage rejection	V_I = 12 to 22 V, f = 120 Hz	56			dB
V_d	Dropout voltage	I_O = 1 A, T_J = 25°C		2		V
R_O	Output resistance	f = 1 kHz		16		mΩ
I_{sc}	Short circuit current	V_I = 35 V, T_J = 25°C		0.45		A
I_{scp}	Short circuit peak current	T_J = 25°C		2.2		A

1. Load and line regulation are specified at constant junction temperature. Changes in V_O due to heating effects must be taken into account separately. Pulse testing with low duty cycle is used.

k. Minimum load current for regulation is 5 mA.

Refer to the test circuits, T_J = 0 to 125 °C, V_I = 15 V, I_O = 500 mA, C_I = 0.33 µF, C_O = 0.1 µF unless otherwise specified[I].

Table 14. Electrical characteristics of L7809C

Symbol	Parameter	Test conditions	Min.	Typ.	Max.	Unit
V_O	Output voltage	T_J = 25°C	8.64	9	9.36	V
V_O	Output voltage	I_O = 5 mA to 1 A, V_I = 11.5 to 22 V	8.55	9	9.45	V
V_O	Output voltage	I_O = 1 A, V_I = 22 to 26 V, T_J = 25°C	8.55	9	9.45	V
ΔV_O[1]	Line regulation	V_I = 11.5 to 26 V, T_J = 25°C			180	mV
		V_I = 12 to 18 V, T_J = 25°C			90	
ΔV_O[1]	Load regulation	I_O = 5 mA to 1.5 A, T_J = 25°C			180	mV
		I_O = 250 to 750 mA, T_J = 25°C			90	
I_d	Quiescent current	T_J = 25°C			8	mA
ΔI_d	Quiescent current change	I_O = 5 mA to 1 A			0.5	mA
		V_I = 11.5 to 26 V			1	
$\Delta V_O/\Delta T$	Output voltage drift	I_O = 5 mA		-1		mV/°C
eN	Output noise voltage	B = 10 Hz to 100 kHz, T_J = 25°C		70		µV/V_O
SVR	Supply voltage rejection	V_I = 12 to 23 V, f = 120 Hz	55			dB
V_d	Dropout voltage	I_O = 1 A, T_J = 25°C		2		V
R_O	Output resistance	f = 1 kHz		17		mΩ
I_{sc}	Short circuit current	V_I = 35 V, T_J = 25°C		0.40		A
I_{scp}	Short circuit peak current	T_J = 25°C		2.2		A

1. Load and line regulation are specified at constant junction temperature. Changes in V_O due to heating effects must be taken into account separately. Pulse testing with low duty cycle is used.

I. Minimum load current for regulation is 5 mA.

Refer to the test circuits, T_J = 0 to 125 °C, V_I = 19 V, I_O = 500 mA, C_I = 0.33 µF, C_O = 0.1 µF unless otherwise specified[(m)].

Table 15. Electrical characteristics of L7812C

Symbol	Parameter	Test conditions	Min.	Typ.	Max.	Unit
V_O	Output voltage	T_J = 25°C	11.5	12	12.5	V
V_O	Output voltage	I_O = 5 mA to 1 A, V_I = 14.5 to 25 V	11.4	12	12.6	V
V_O	Output voltage	I_O = 1 A, V_I = 25 to 27 V, T_J = 25°C	11.4	12	12.6	V
ΔV_O[(1)]	Line regulation	V_I = 14.5 to 30 V, T_J = 25°C			240	mV
		V_I = 16 to 22 V, T_J = 25°C			120	
ΔV_O[(1)]	Load regulation	I_O = 5 mA to 1.5 A, T_J = 25°C			240	mV
		I_O = 250 to 750 mA, T_J = 25°C			120	
I_d	Quiescent current	T_J = 25°C			8	mA
ΔI_d	Quiescent current change	I_O = 5 mA to 1 A			0.5	mA
		V_I = 14.5 to 30 V			1	
$\Delta V_O/\Delta T$	Output voltage drift	I_O = 5 mA		-1		mV/°C
eN	Output noise voltage	B = 10 Hz to 100 kHz, T_J = 25°C		75		µV/V_O
SVR	Supply voltage rejection	V_I = 15 to 25 V, f = 120 Hz	55			dB
V_d	Dropout voltage	I_O = 1 A, T_J = 25°C		2		V
R_O	Output resistance	f = 1 kHz		18		mΩ
I_{sc}	Short circuit current	V_I = 35 V, T_J = 25°C		0.35		A
I_{scp}	Short circuit peak current	T_J = 25°C		2.2		A

1. Load and line regulation are specified at constant junction temperature. Changes in V_O due to heating effects must be taken into account separately. Pulse testing with low duty cycle is used.

m. Minimum load current for regulation is 5 mA.

Refer to the test circuits, T_J = 0 to 125 °C, V_I = 23 V, I_O = 500 mA, C_I = 0.33 µF, C_O = 0.1 µF unless otherwise specified[n].

Table 16. Electrical characteristics of L7815C

Symbol	Parameter	Test conditions	Min.	Typ.	Max.	Unit
V_O	Output voltage	T_J = 25°C	14.4	15	15.6	V
V_O	Output voltage	I_O = 5 mA to 1 A, V_I = 17.5 to 28 V	14.25	15	15.75	V
V_O	Output voltage	I_O = 1 A, V_I = 28 to 30 V, T_J = 25°C	14.25	15	15.75	V
ΔV_O[1]	Line regulation	V_I = 17.5 to 30 V, T_J = 25°C			300	mV
		V_I = 20 to 26 V, T_J = 25°C			150	
ΔV_O[1]	Load regulation	I_O = 5 mA to 1.5 A, T_J = 25°C			300	mV
		I_O = 250 to 750 mA, T_J = 25°C			150	
I_d	Quiescent current	T_J = 25°C			8	mA
ΔI_d	Quiescent current change	I_O = 5 mA to 1A			0.5	mA
		V_I = 17.5 to 30 V			1	
$\Delta V_O/\Delta T$	Output voltage drift	I_O = 5 mA		-1		mV/°C
eN	Output noise voltage	B = 10 Hz to 100kHz, T_J = 25°C		90		µV/V_O
SVR	Supply voltage rejection	V_I = 18.5 to 28.5 V, f = 120 Hz	54			dB
V_d	Dropout voltage	I_O = 1 A, T_J = 25°C		2		V
R_O	Output resistance	f = 1 kHz		19		mΩ
I_{sc}	Short circuit current	V_I = 35 V, T_J = 25°C		0.23		A
I_{scp}	Short circuit peak current	T_J = 25°C		2.2		A

1. Load and line regulation are specified at constant junction temperature. Changes in V_O due to heating effects must be taken into account separately. Pulse testing with low duty cycle is used.

n. Minimum load current for regulation is 5 mA.

Refer to the test circuits, T_J = 0 to 125 °C, V_I = 26 V, I_O = 500 mA, C_I = 0.33 µF, C_O = 0.1 µF unless otherwise specified[o].

Table 17. Electrical characteristics of L7818C

Symbol	Parameter	Test conditions	Min.	Typ.	Max.	Unit
V_O	Output voltage	T_J = 25°C	17.3	18	18.7	V
V_O	Output voltage	I_O = 5 mA to 1 A, V_I = 21 to 31 V	17.1	18	18.9	V
V_O	Output voltage	I_O = 1 A, V_I = 31 to 33 V, T_J = 25°C	17.1	18	18.9	V
ΔV_O[1]	Line regulation	V_I = 21 to 33 V, T_J = 25°C			360	mV
		V_I = 24 to 30 V, T_J = 25°C			180	
ΔV_O[1]	Load regulation	I_O = 5 mA to 1.5 A, T_J = 25°C			360	mV
		I_O = 250 to 750 mA, T_J = 25°C			180	
I_d	Quiescent current	T_J = 25°C			8	mA
ΔI_d	Quiescent current change	I_O = 5 mA to 1 A			0.5	mA
		V_I = 21 to 33 V			1	
$\Delta V_O/\Delta T$	Output voltage drift	I_O = 5 mA		-1		mV/°C
eN	Output noise voltage	B = 10 Hz to 100 kHz, T_J = 25°C		110		µV/V_O
SVR	Supply voltage rejection	V_I = 22 to 32 V, f = 120 Hz	53			dB
V_d	Dropout voltage	I_O = 1 A, T_J = 25°C		2		V
R_O	Output resistance	f = 1 kHz		22		mΩ
I_{sc}	Short circuit current	V_I = 35 V, T_J = 25°C		0.20		A
I_{scp}	Short circuit peak current	T_J = 25°C		2.1		A

1. Load and line regulation are specified at constant junction temperature. Changes in V_O due to heating effects must be taken into account separately. Pulse testing with low duty cycle is used.

o. Minimum load current for regulation is 5 mA.

Refer to the test circuits, T_J = 0 to 125 °C, V_I = 33 V, I_O = 500 mA, C_I = 0.33 µF, C_O = 0.1 µF unless otherwise specified[p].

Table 18. Electrical characteristics of L7824C

Symbol	Parameter	Test conditions	Min.	Typ.	Max.	Unit
V_O	Output voltage	T_J = 25°C	23	24	25	V
V_O	Output voltage	I_O = 5 mA to 1 A, V_I = 27 to 37 V	22.8	24	25.2	V
V_O	Output voltage	I_O = 1 A, V_I = 37 to 38 V, T_J = 25°C	22.8	24	25.2	V
ΔV_O[1]	Line regulation	V_I = 27 to 38 V, T_J = 25°C			480	mV
		V_I = 30 to 36 V, T_J = 25°C			240	
ΔV_O[1]	Load regulation	I_O = 5 mA to 1.5 A, T_J = 25°C			480	mV
		I_O = 250 to 750 mA, T_J = 25°C			240	
I_d	Quiescent current	T_J = 25°C			8	mA
ΔI_d	Quiescent current change	I_O = 5 mA to 1 A			0.5	mA
		V_I = 27 to 38 V			1	
$\Delta V_O/\Delta T$	Output voltage drift	I_O = 5 mA		-1.5		mV/°C
eN	Output noise voltage	B = 10 Hz to 100 kHz, T_J = 25°C		170		µV/V_O
SVR	Supply voltage rejection	V_I = 28 to 38 V, f = 120 Hz	50			dB
V_d	Dropout voltage	I_O = 1 A, T_J = 25°C		2		V
R_O	Output resistance	f = 1 kHz		28		mΩ
I_{sc}	Short circuit current	V_I = 35 V, T_J = 25°C		0.15		A
I_{scp}	Short circuit peak current	T_J = 25°C		2.1		A

1. Load and line regulation are specified at constant junction temperature. Changes in V_O due to heating effects must be taken into account separately. Pulse testing with low duty cycle is used.

p. Minimum load current for regulation is 5 mA.

6 Application information

6.1 Design consideration

The L78 Series of fixed voltage regulators are designed with thermal overload protection that shuts down the circuit when subjected to an excessive power overload condition, internal short-circuit protection that limits the maximum current the circuit will pass, and output transistor safe-area compensation that reduces the output short-circuit current as the voltage across the pass transistor is increased. In many low current applications, compensation capacitors are not required. However, it is recommended that the regulator input be bypassed with capacitor if the regulator is connected to the power supply filter with long lengths, or if the output load capacitance is large. An input bypass capacitor should be selected to provide good high frequency characteristics to insure stable operation under all load conditions. A 0.33 µF or larger tantalum, mylar or other capacitor having low internal impedance at high frequencies should be chosen. The bypass capacitor should be mounted with the shortest possible leads directly across the regulators input terminals. Normally good construction techniques should be used to minimize ground loops and lead resistance drops since the regulator has no external sense lead.

The addition of an operational amplifier allows adjustment to higher or intermediate values while retaining regulation characteristics. The minimum voltage obtained with the arrangement is 2 V greater than the regulator voltage.

The circuit of *Figure 13* can be modified to provide supply protection against short circuit by adding a short circuit sense resistor, RSC, and an additional PNP transistor. The current sensing PNP must be able to handle the short circuit current of the three terminal regulator Therefore a four ampere plastic power transistor is specified.

Figure 8. Fixed output regulator

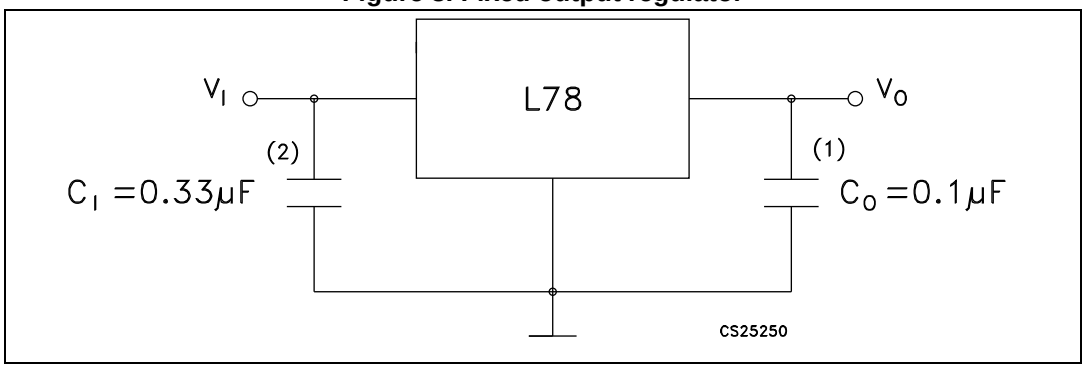

1. Although no output capacitor is need for stability, it does improve transient response.
2. Required if regulator is located an appreciable distance from power supply filter.

Figure 9. Current regulator

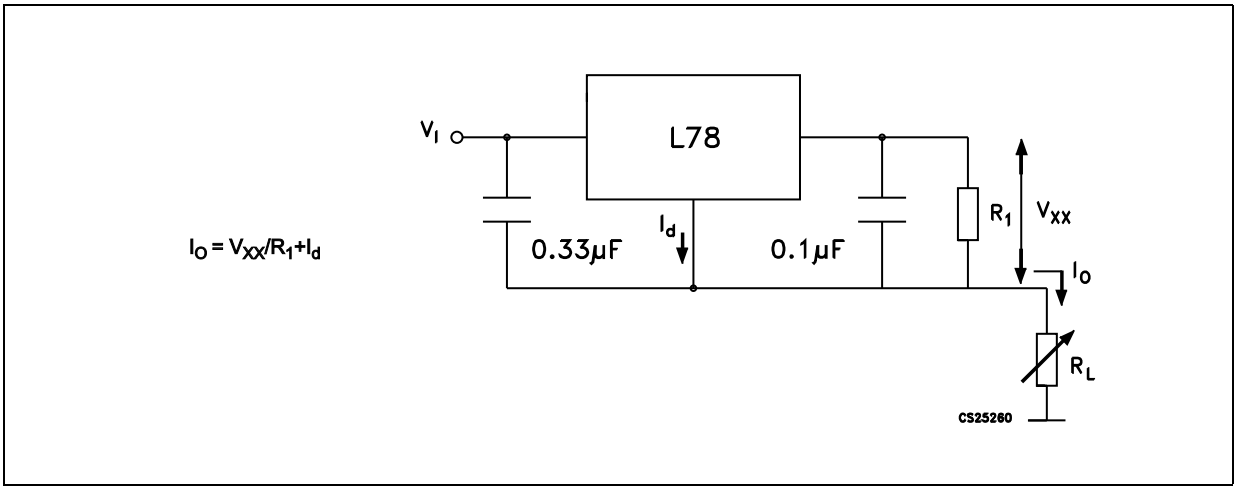

Figure 10. Circuit for increasing output voltage

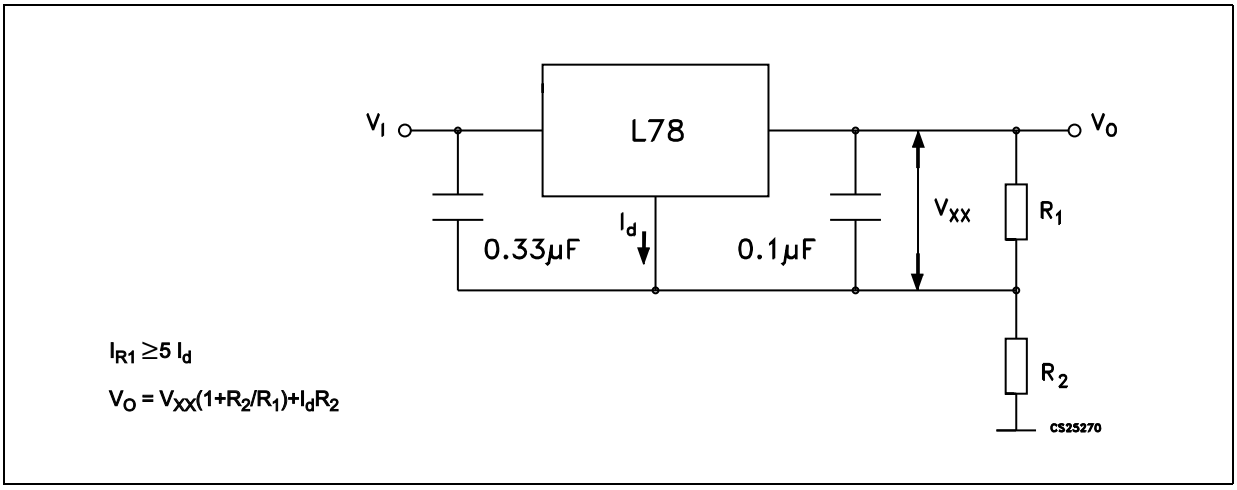

Figure 11. Adjustable output regulator (7 to 30 V)

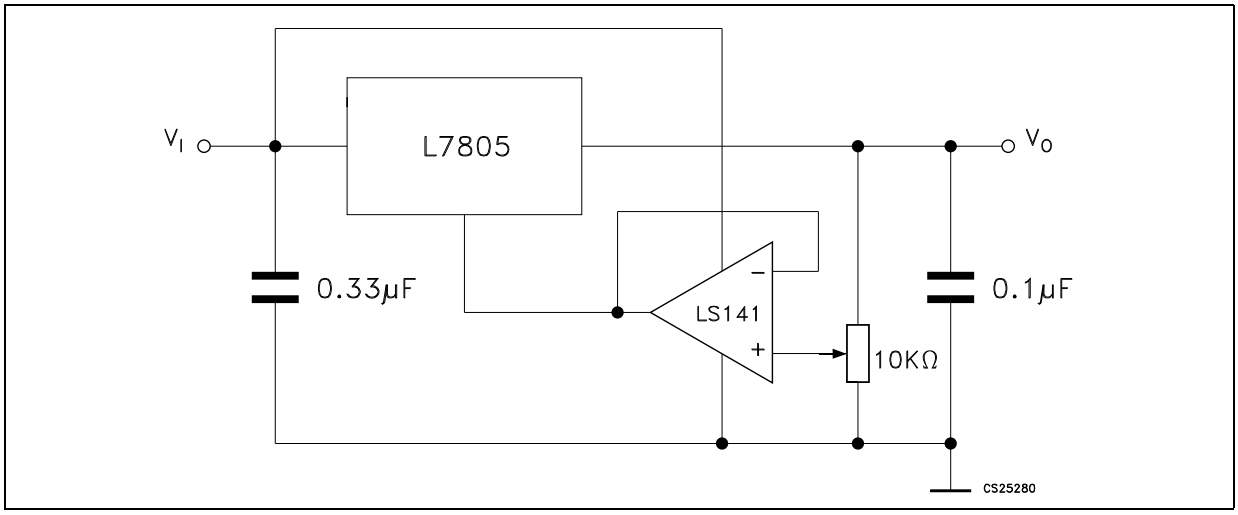

Figure 12. 0.5 to 10 V regulator

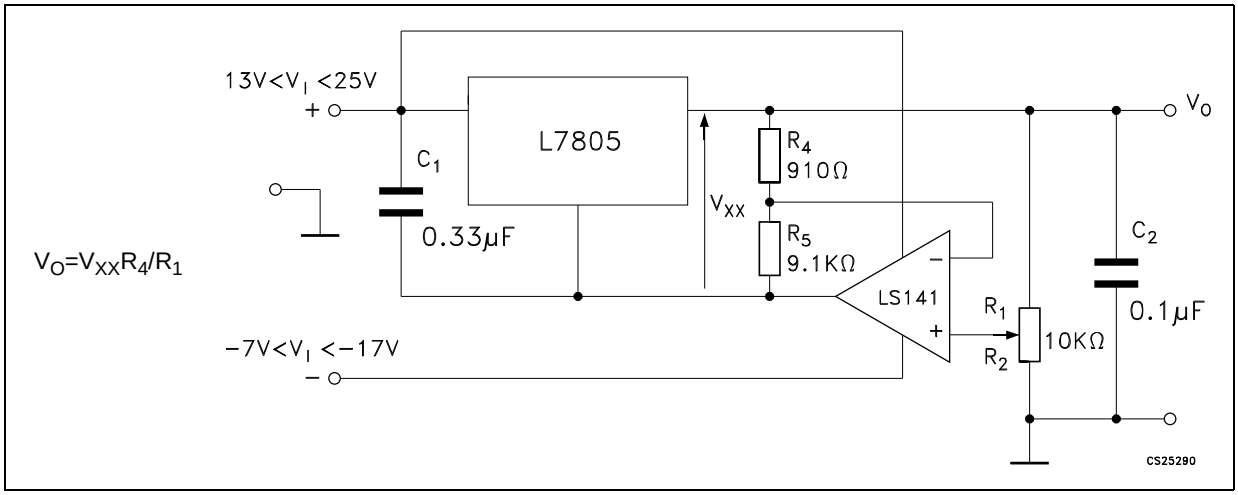

Figure 13. High current voltage regulator

$$R_1 = \frac{V_{BEQ1}}{I_{REQ}-(I_{Q1}/b_{Q1})}$$

$$I_O = I_{REG} + Q_1 \left(I_{REG} \frac{V_{BEQ1}}{R_1}\right)$$

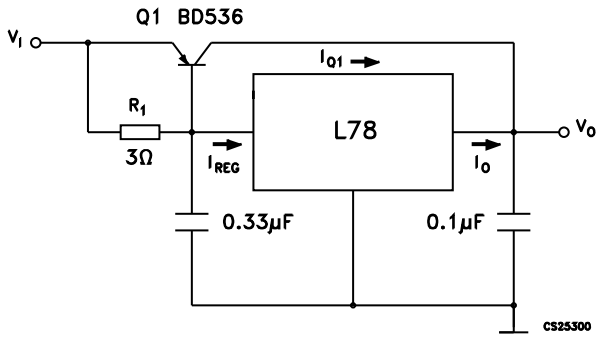

Figure 14. High output current with short circuit protection

$R_{SC}=V_{BEQ2}/I_{SC}$

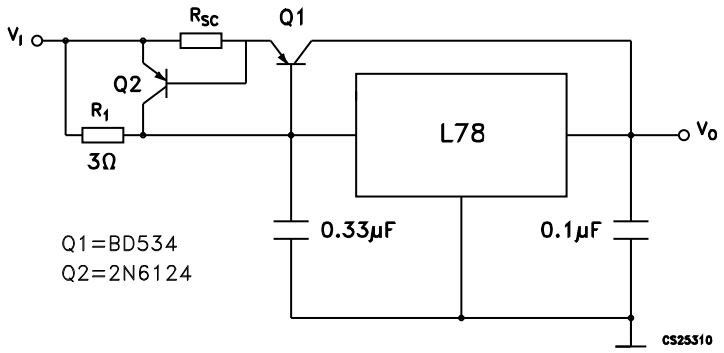

Figure 15. Tracking voltage regulator

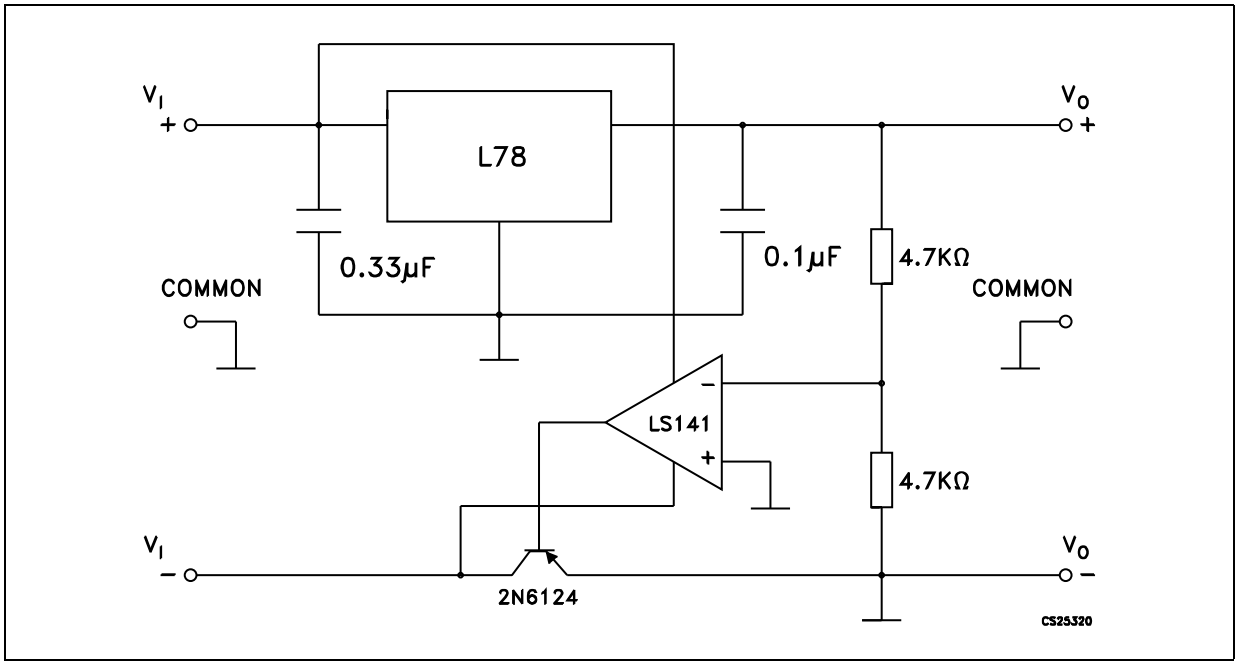

Figure 16. Split power supply (± 15 V - 1 A)

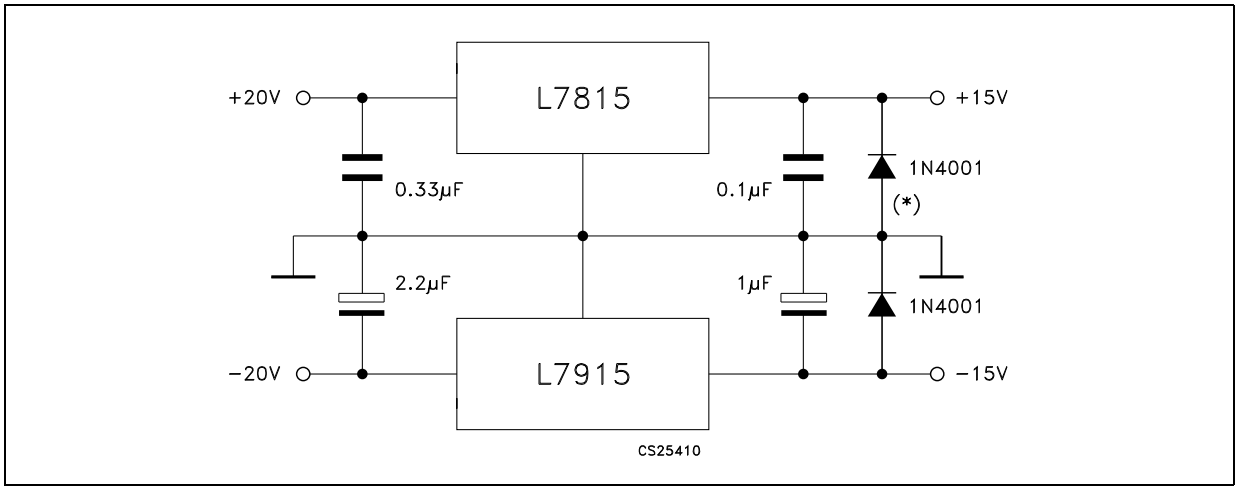

* Against potential latch-up problems.

Figure 17. Negative output voltage circuit

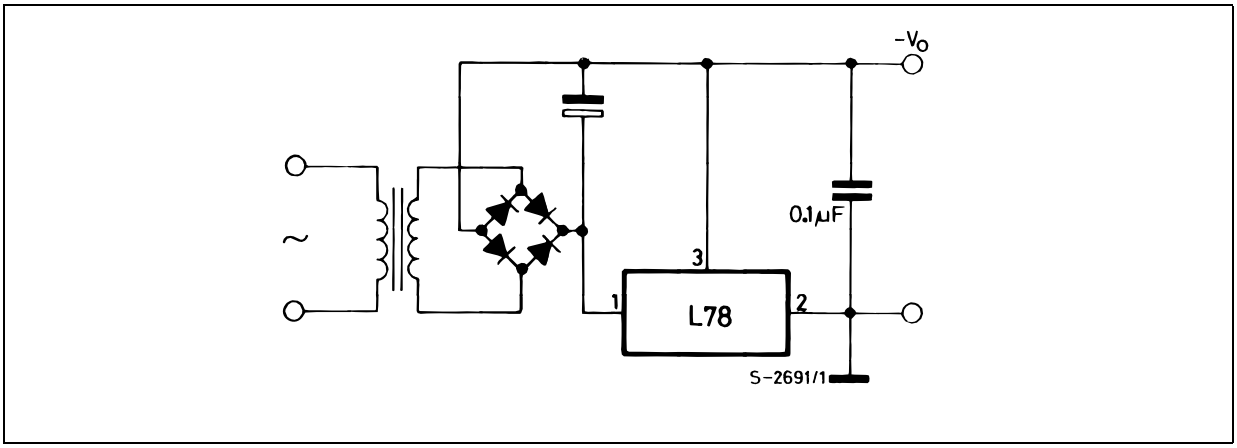

Figure 18. Switching regulator

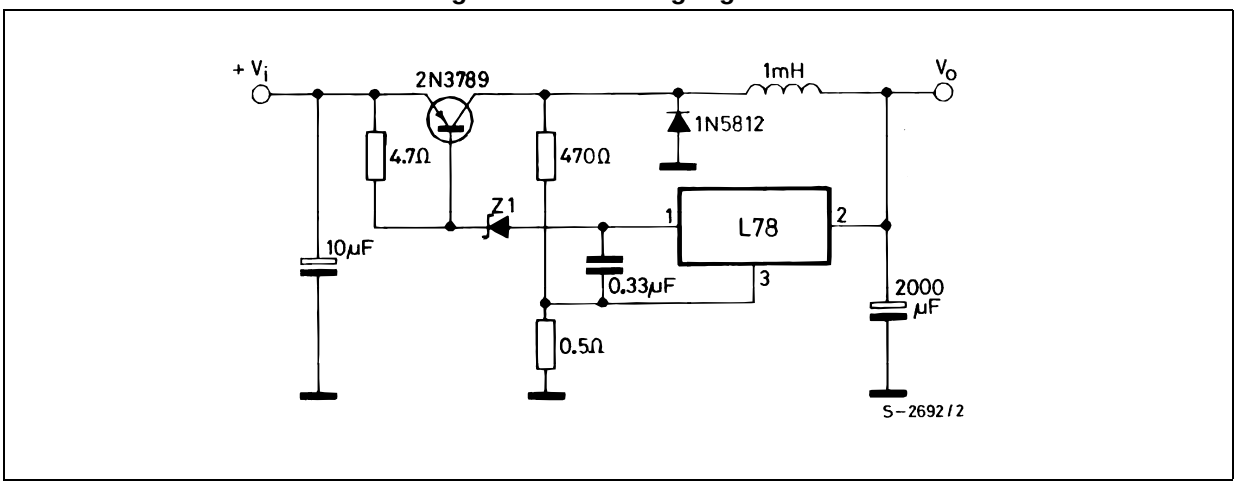

Figure 19. High input voltage circuit (configuration 1)

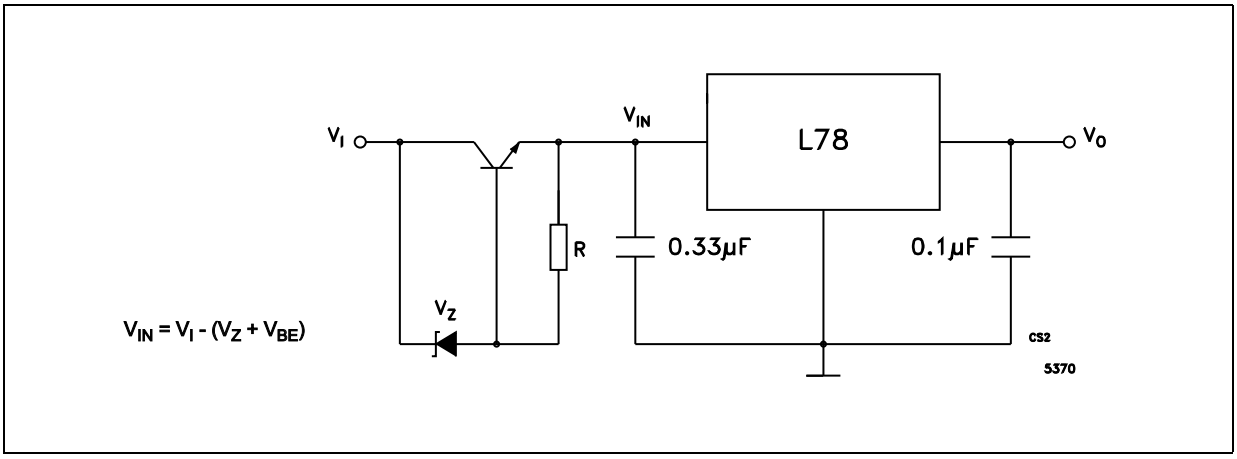

Figure 20. High input voltage circuit (configuration 2)

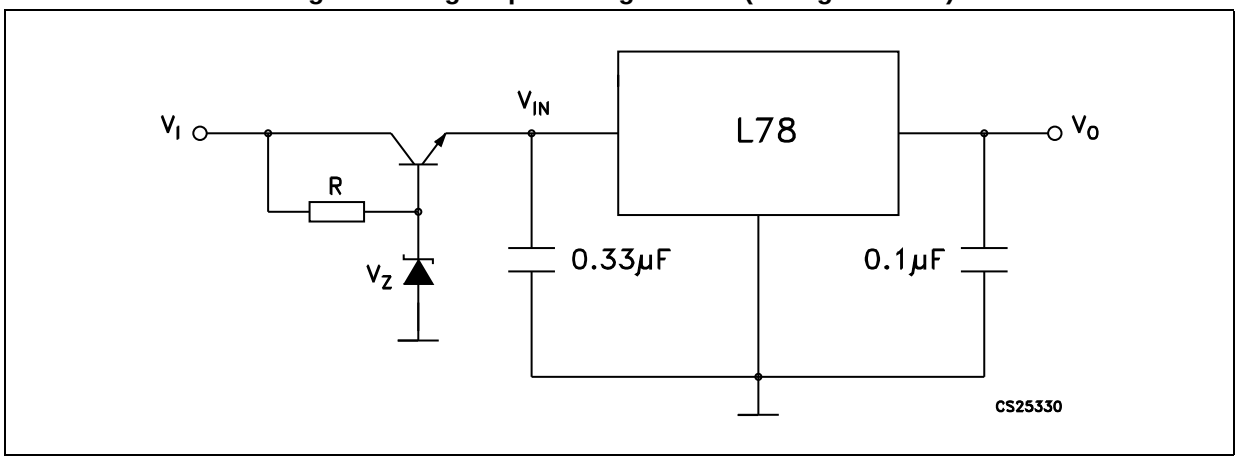

Figure 21. High input and output voltage

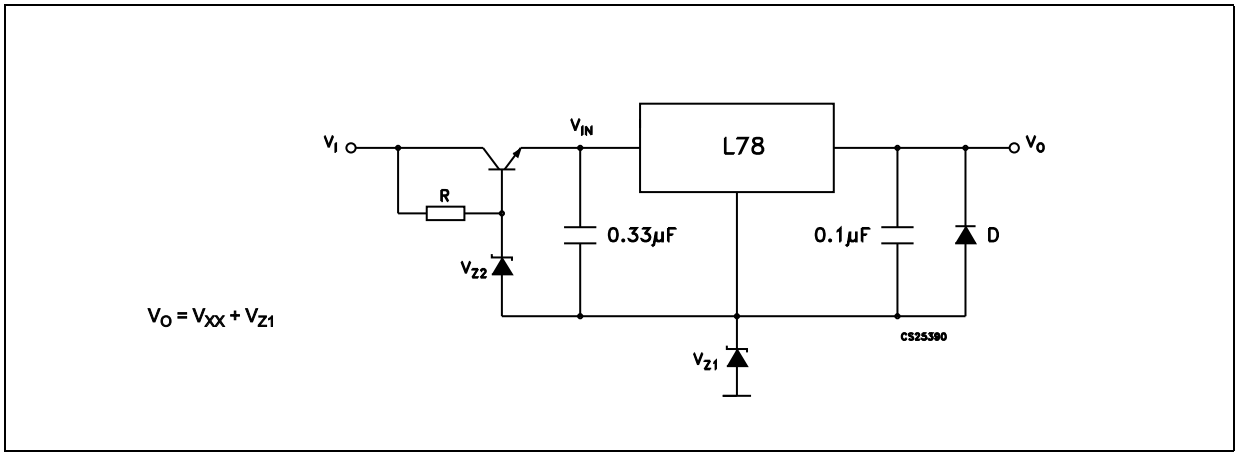

Figure 22. Reducing power dissipation with dropping resistor

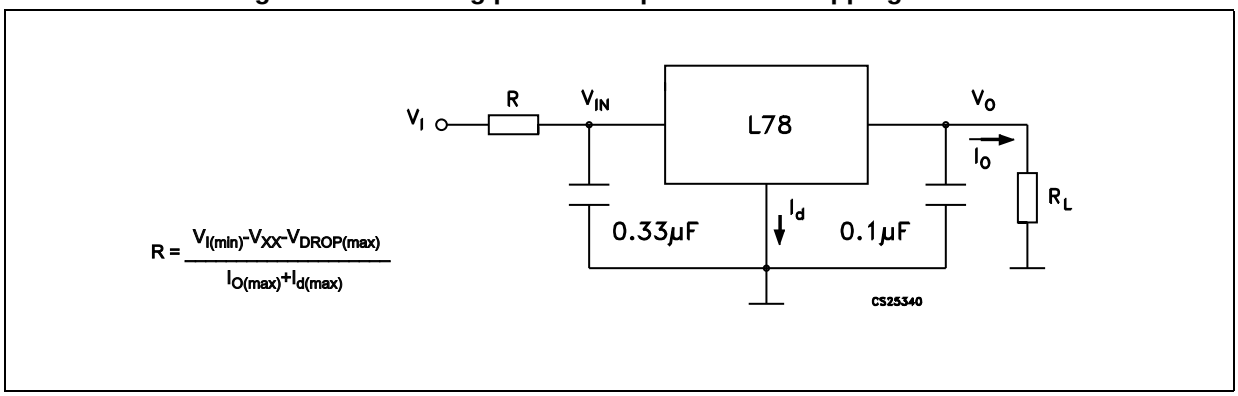

Figure 23. Remote shutdown

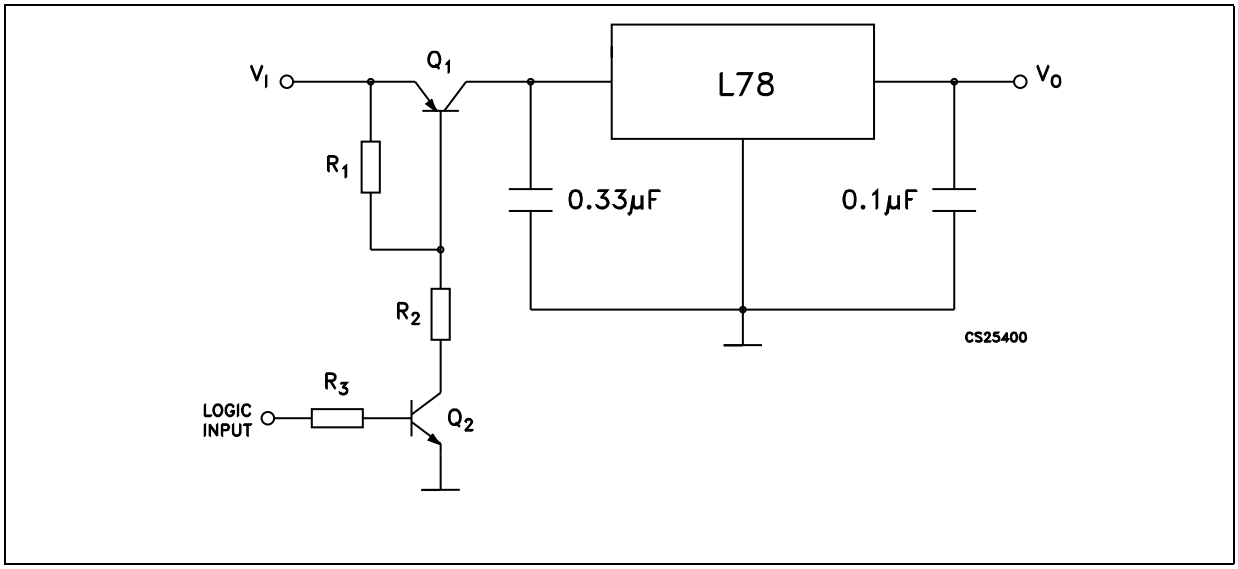

Figure 24. Power AM modulator (unity voltage gain, $I_O \leq 0.5$)

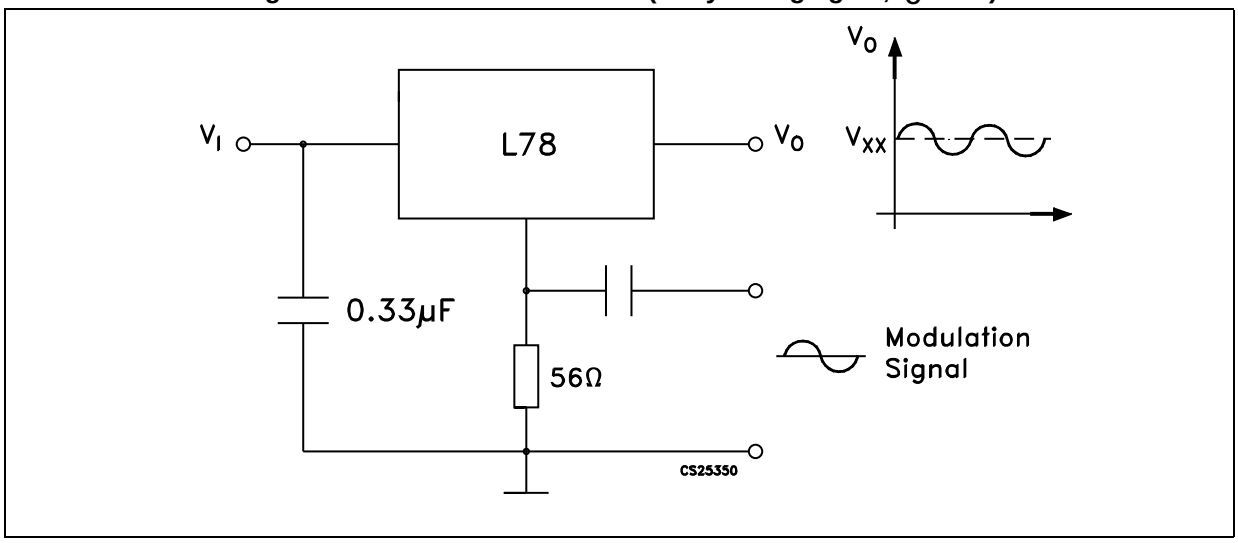

Note: The circuit performs well up to 100 kHz.

Figure 25. Adjustable output voltage with temperature compensation

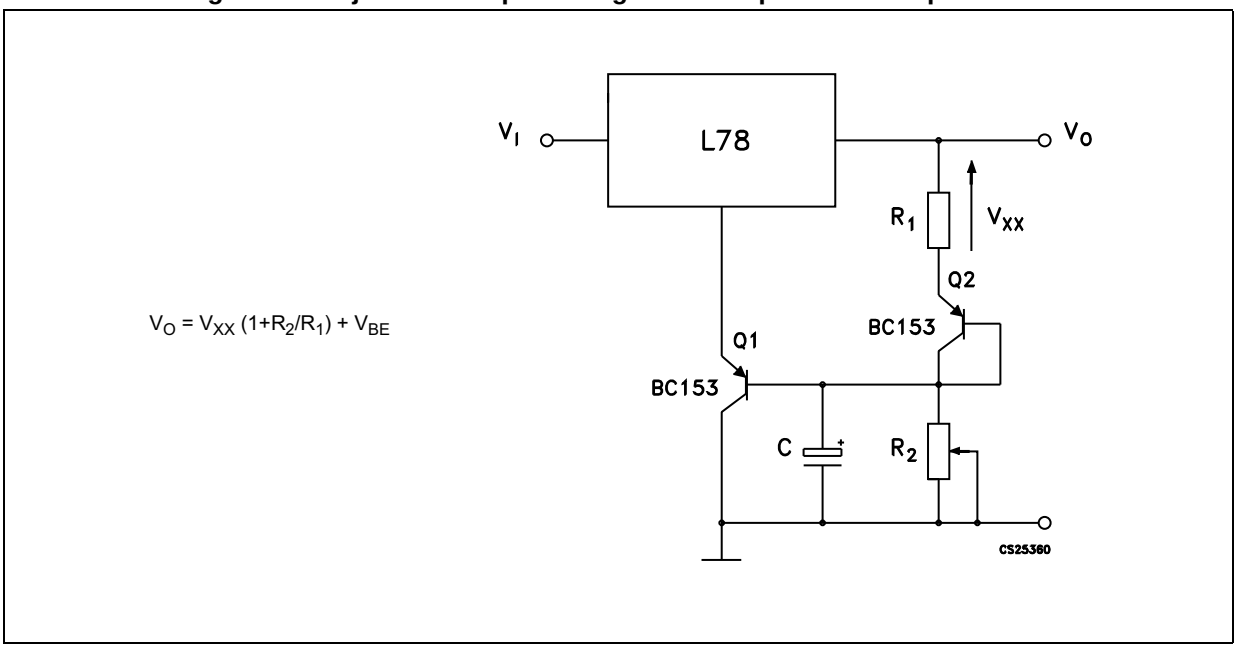

Note: Q_2 is connected as a diode in order to compensate the variation of the Q_1 V_{BE} with the temperature. C allows a slow rise time of the V_O.

Figure 26. Light controllers ($V_{O(min)} = V_{XX} + V_{BE}$)

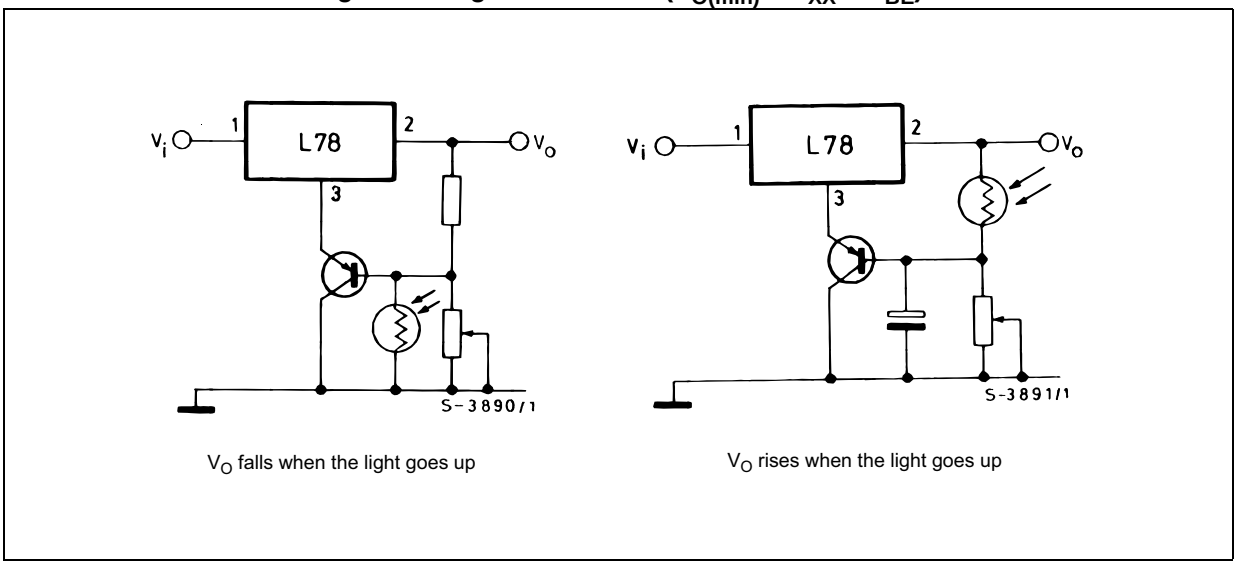

Figure 27. Protection against input short-circuit with high capacitance loads

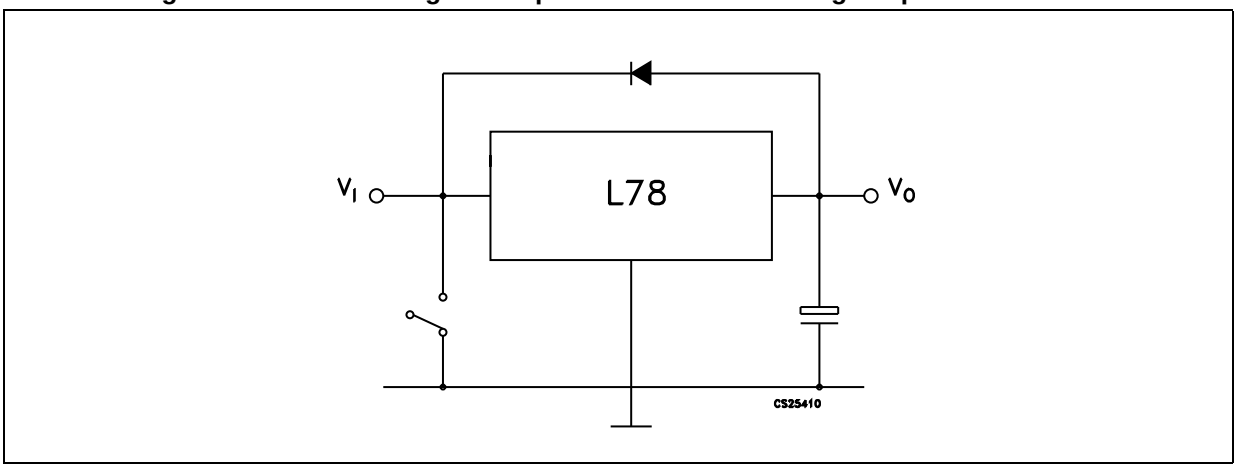

Note: Application with high capacitance loads and an output voltage greater than 6 volts need an external diode (see Figure 22 on page 31) to protect the device against input short circuit. In this case the input voltage falls rapidly while the output voltage decrease slowly. The capacitance discharges by means of the base-emitter junction of the series pass transistor in the regulator. If the energy is sufficiently high, the transistor may be destroyed. The external diode by-passes the current from the IC to ground.

7 Typical performance

Figure 28. Dropout voltage vs. junction temperature

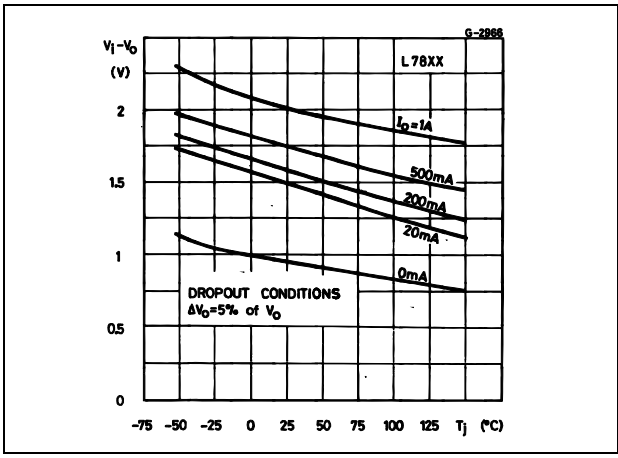

Figure 29. Peak output current vs. input/output differential voltage

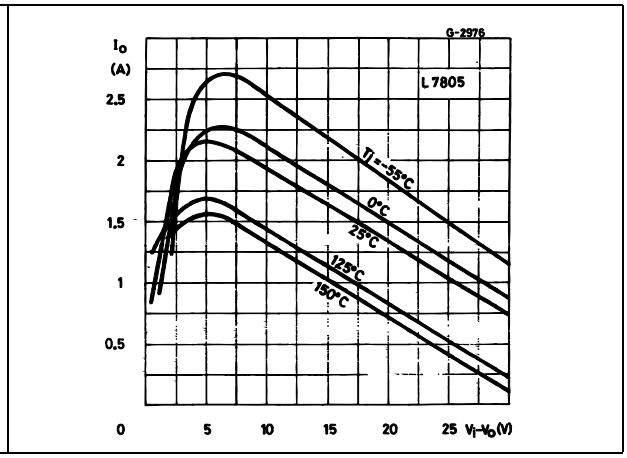

Figure 30. Supply voltage rejection vs. frequency

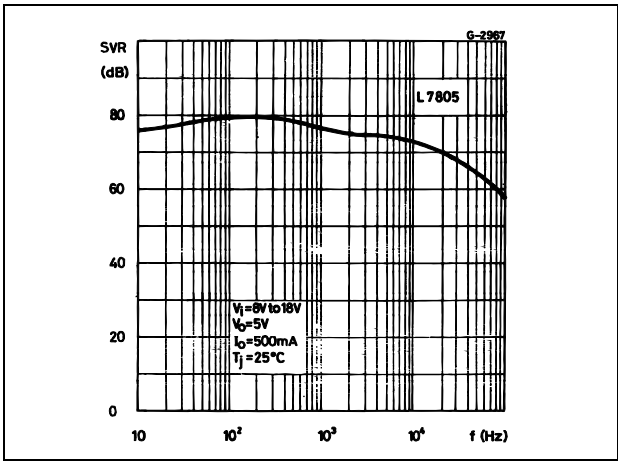

Figure 31. Output voltage vs. junction temperature

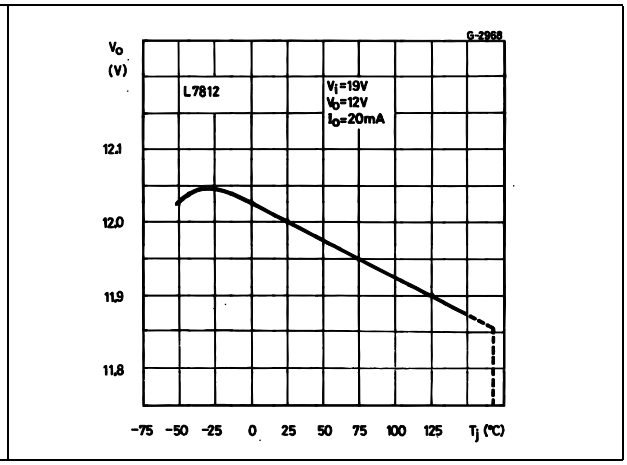

Figure 32. Output impedance vs. frequency

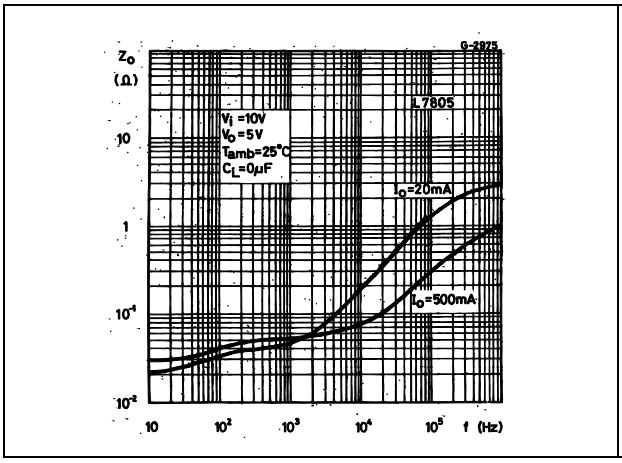

Figure 33. Quiescent current vs. junction temp.

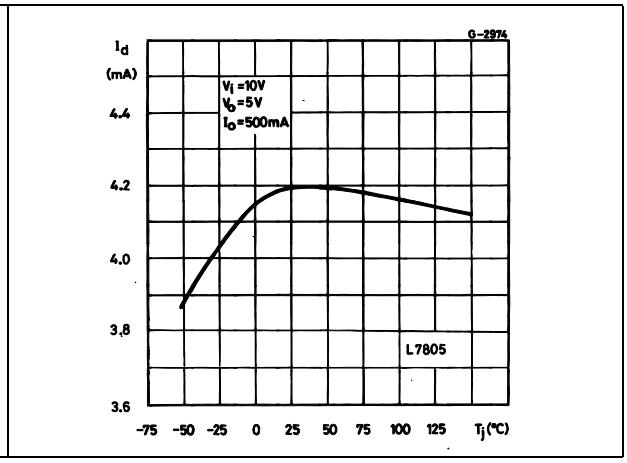

Figure 34. Load transient response

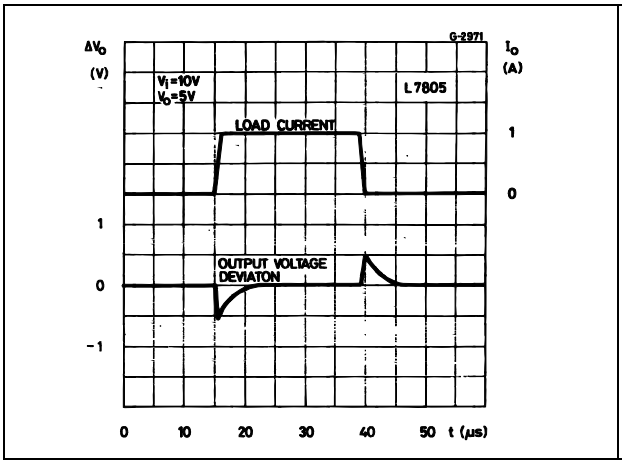

Figure 35. Line transient response

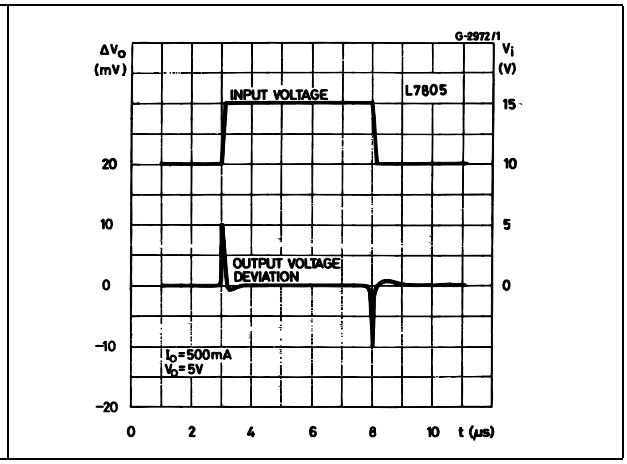

Figure 36. Quiescent current vs. input voltage

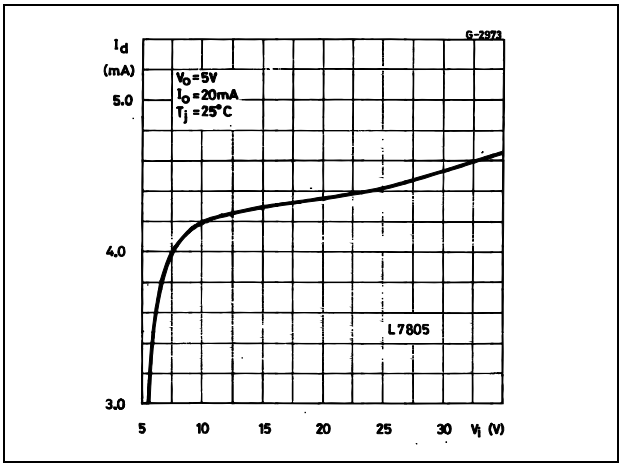

8 Package mechanical data

In order to meet environmental requirements, ST offers these devices in different grades of ECOPACK® packages, depending on their level of environmental compliance. ECOPACK® specifications, grade definitions and product status are available at: *www.st.com*. ECOPACK® is an ST trademark.

Figure 37. TO-220 (dual gauge) drawing

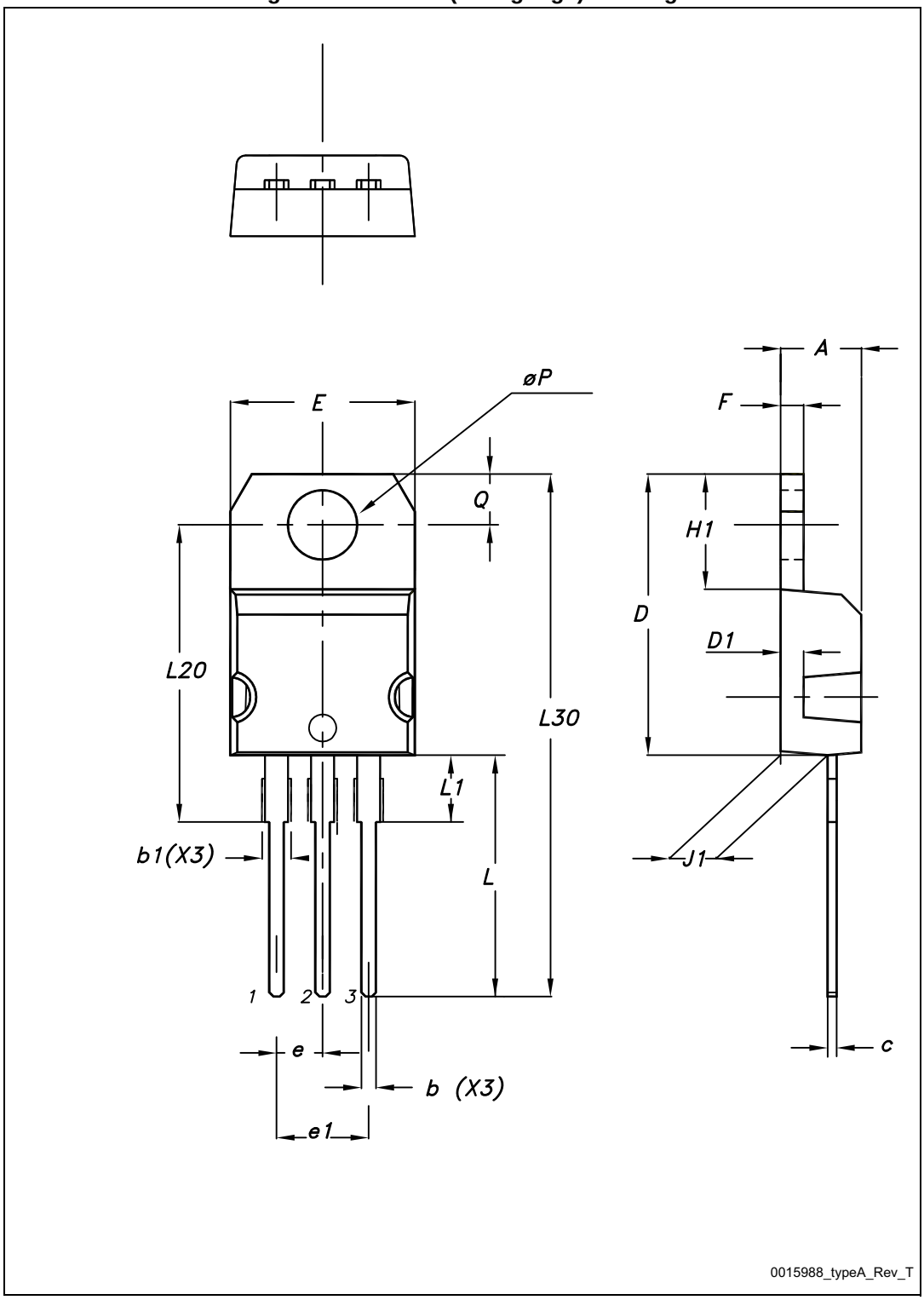

Table 19. TO-220 (dual gauge) mechanical data

Dim.	mm		
	Min.	Typ.	Max.
A	4.40		4.60
b	0.61		0.88
b1	1.14		1.70
c	0.48		0.70
D	15.25		15.75
D1		1.27	
E	10		10.40
e	2.40		2.70
e1	4.95		5.15
F	1.23		1.32
H1	6.20		6.60
J1	2.40		2.72
L	13		14
L1	3.50		3.93
L20		16.40	
L30		28.90	
∅P	3.75		3.85
Q	2.65		2.95

Figure 38. TO-220 SG (single gauge) drawing

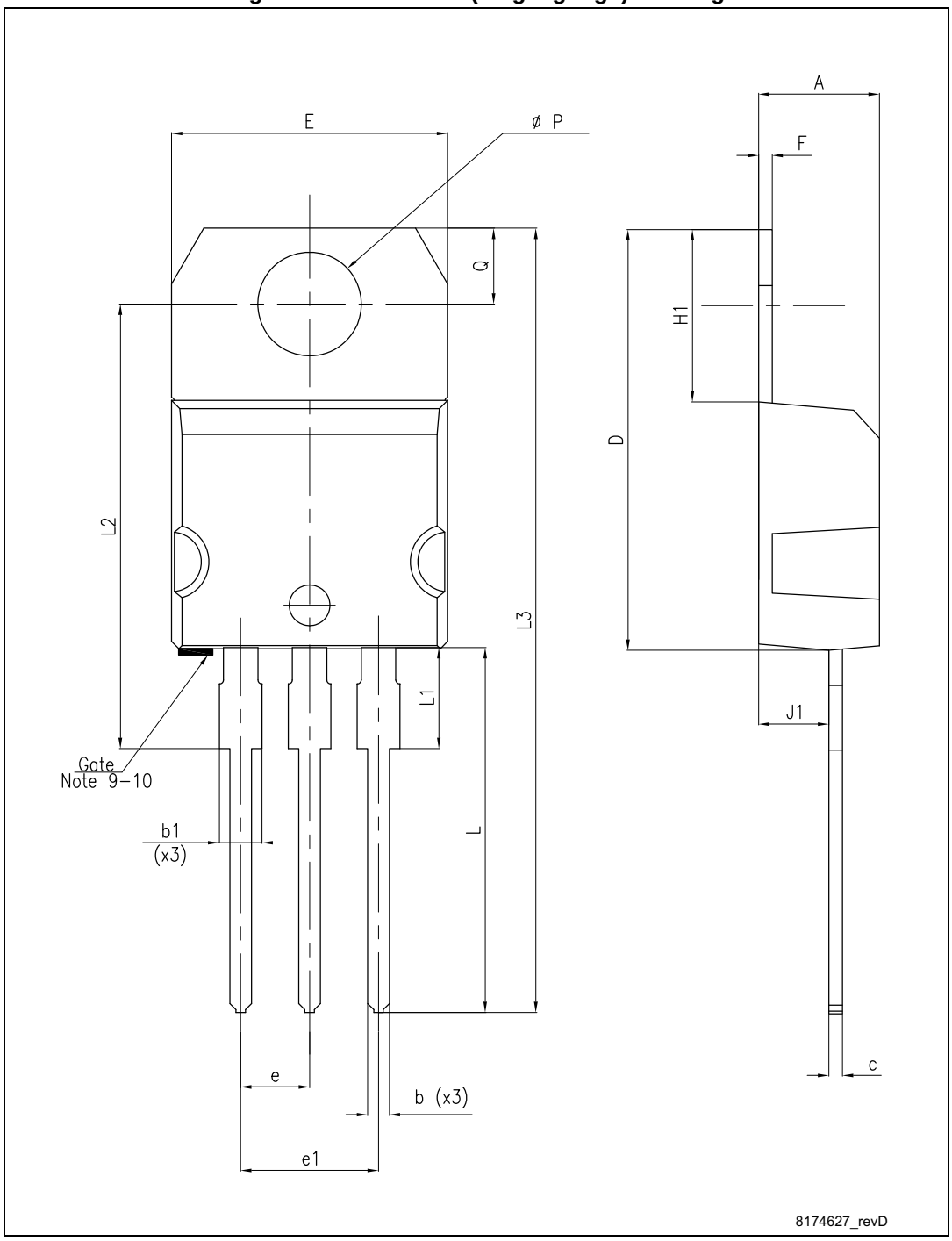

Table 20. TO-220 SG (single gauge) mechanical data

Dim.	mm		
	Min.	Typ.	Max.
A	4.40		4.60
b	0.61		0.88
b1	1.14		1.70
c	0.48		0.70
D	15.25		15.75
E	10		10.40
e	2.40		2.70
e1	4.95		5.15
F	0.51		0.60
H1	6.20		6.60
J1	2.40		2.72
L	13		14
L1	3.50		3.93
L20		16.40	
L30		28.90	
∅P	3.75		3.85
Q	2.65		2.95

Figure 39. TO-220FP drawing

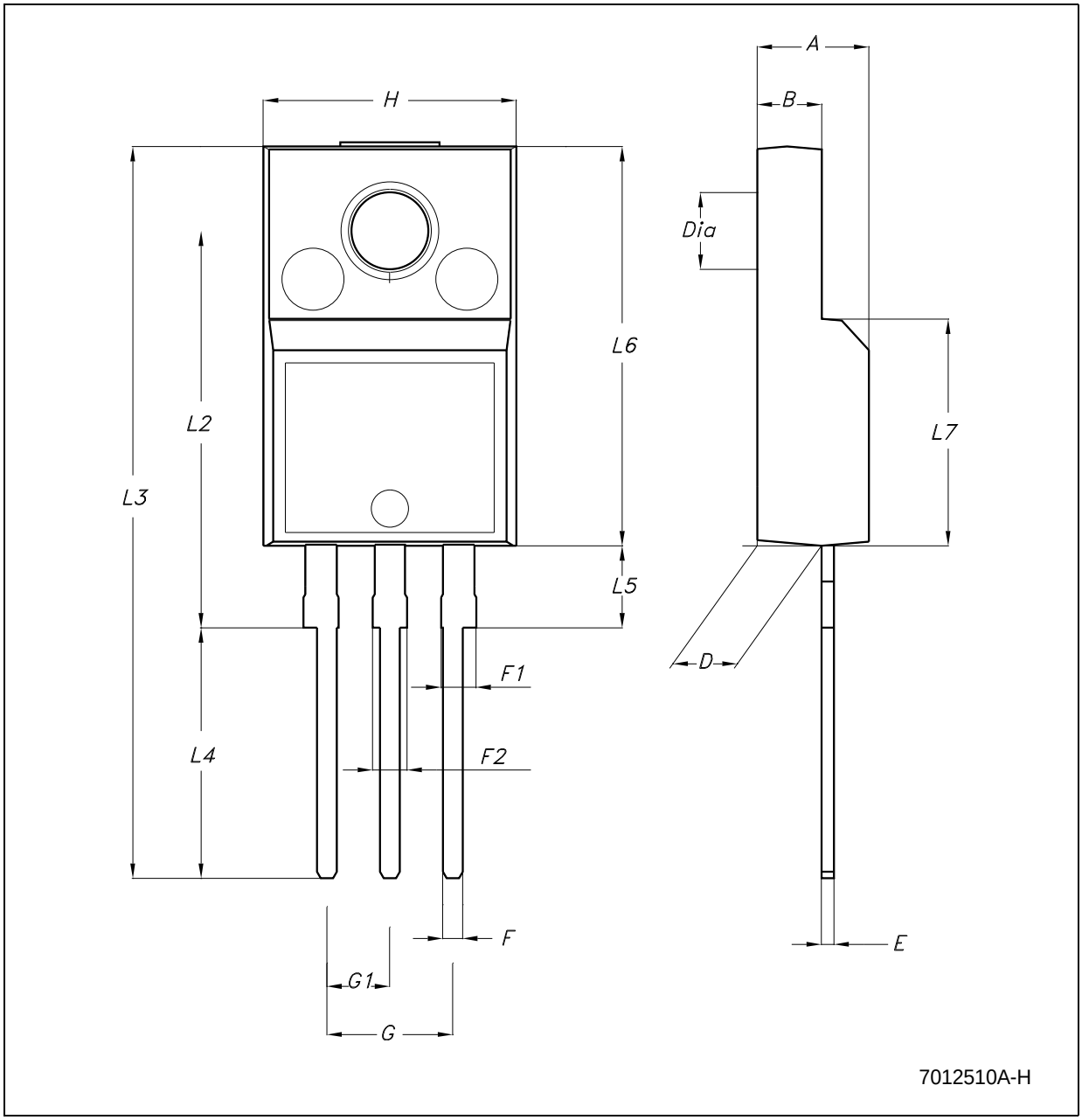

Table 21. TO-220FP mechanical data

Dim.	mm.		
	Min.	Typ.	Max.
A	4.40		4.60
B	2.5		2.7
D	2.5		2.75
E	0.45		0.70
F	0.75		1
F1	1.15		1.50
F2	1.15		1.50
G	4.95		5.2
G1	2.4		2.7
H	10.0		10.40
L2		16	
L3	28.6		30.6
L4	9.8		10.6
L5	2.9		3.6
L6	15.9		16.4
L7	9		9.3
DIA.	3		3.2

Figure 40. DPAK drawing

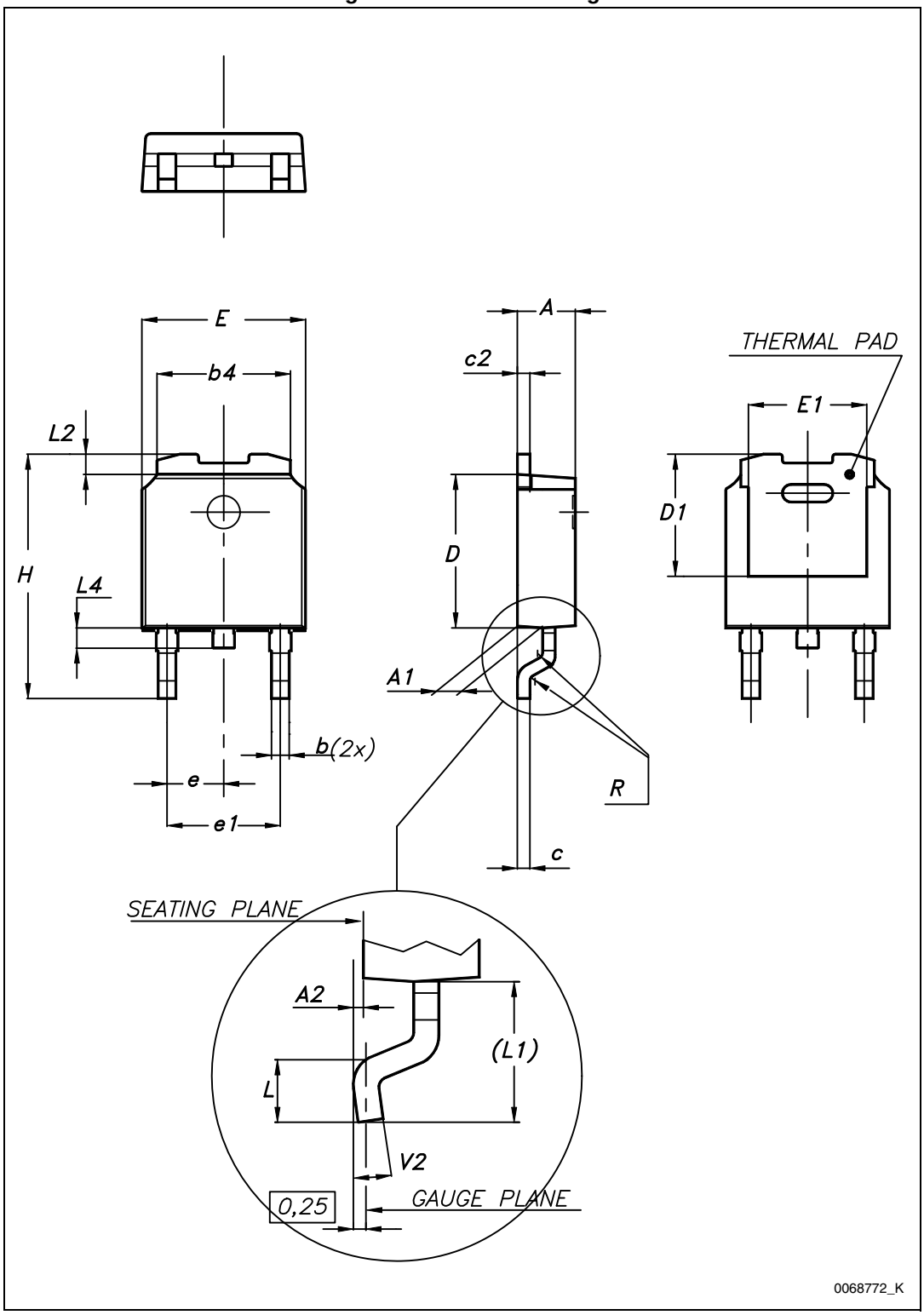

Table 22. DPAK mechanical data

Dim.	mm		
	Min.	Typ.	Max.
A	2.20		2.40
A1	0.90		1.10
A2	0.03		0.23
b	0.64		0.90
b4	5.20		5.40
c	0.45		0.60
c2	0.48		0.60
D	6.00		6.20
D1		5.10	
E	6.40		6.60
E1		4.70	
e		2.28	
e1	4.40		4.60
H	9.35		10.10
L	1.00		1.50
(L1)		2.80	
L2		0.80	
L4	0.60		1.00
R		0.20	
V2	0°		8°

Figure 41. DPAK footprint [q]

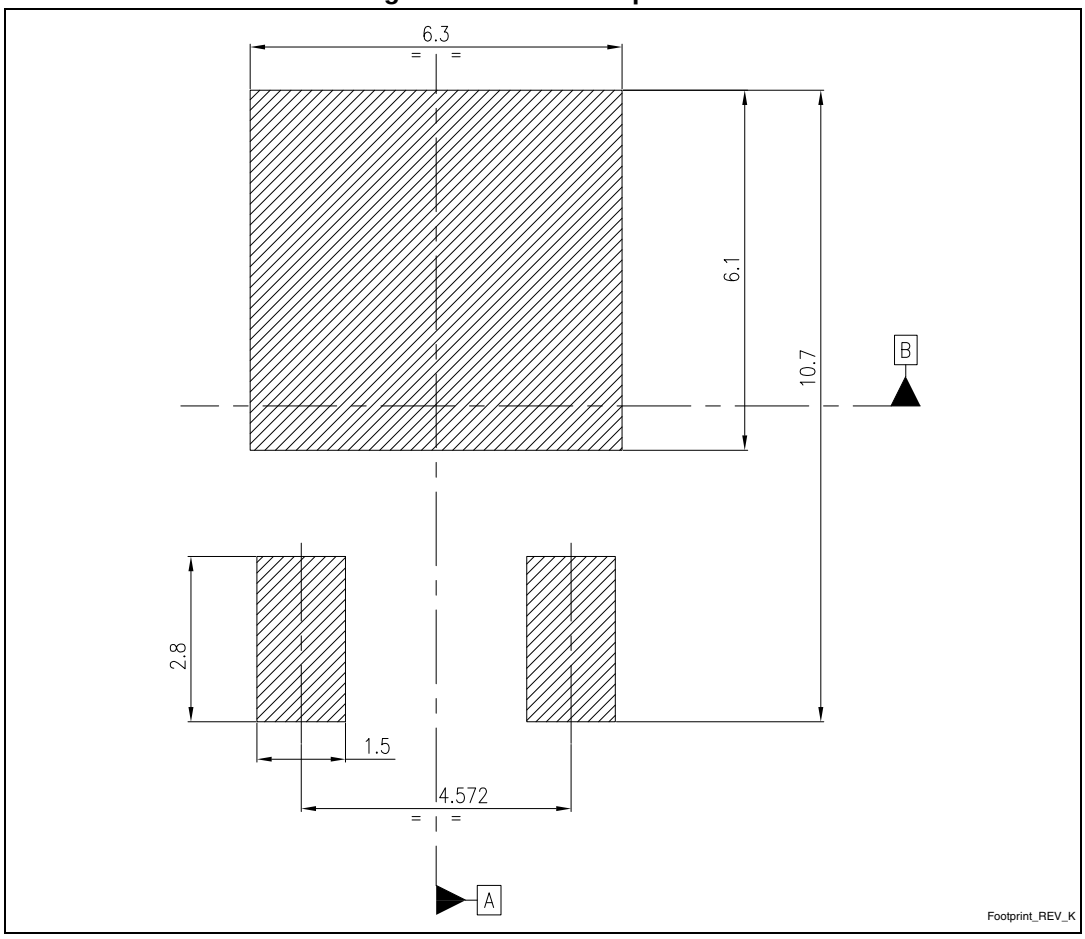

q. All dimensions are in millimeters

Figure 42. D²PAK (SMD 2L STD-ST) type A drawing

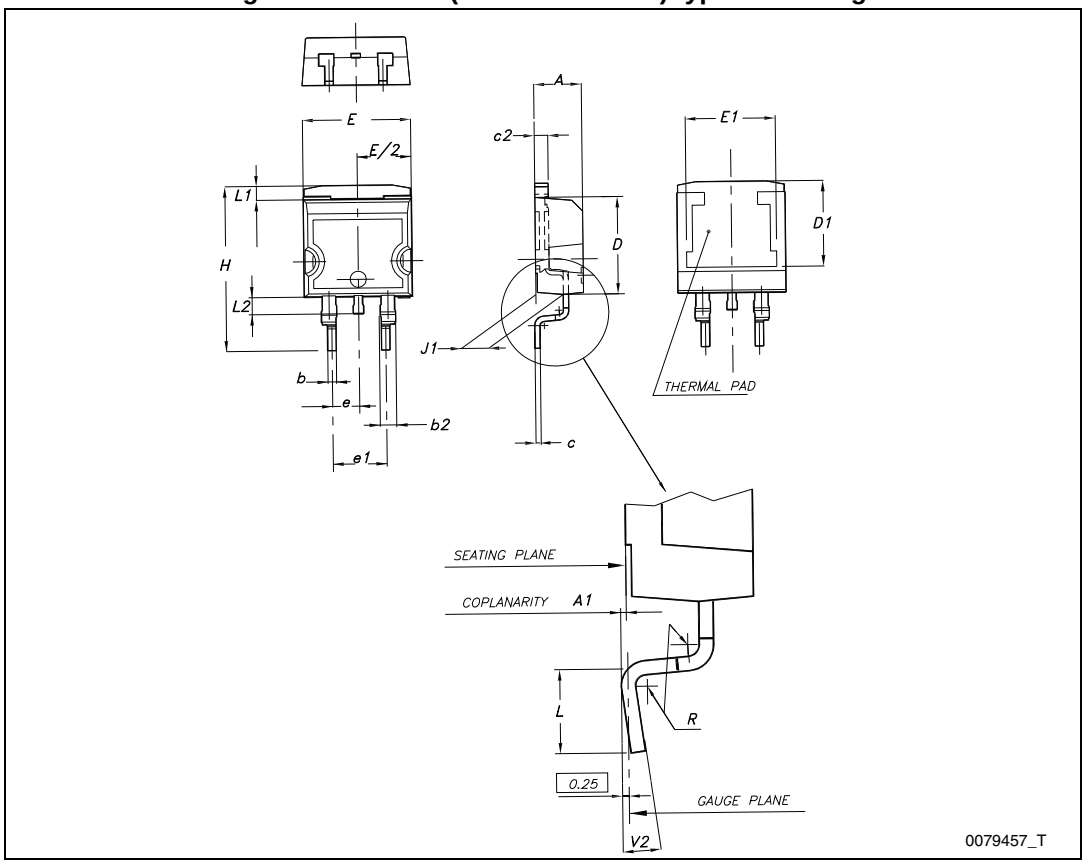

Table 23. D²PAK (SMD 2L STD-ST) mechanical data

Dim.	mm		
	Min.	Typ.	Max.
A	4.40		4.60
A1	0.03		0.23
b	0.70		0.93
b2	1.14		1.70
c	0.45		0.60
c2	1.23		1.36
D	8.95		9.35
D1	7.50		
E	10		10.40
E1	8.50		
e		2.54	
e1	4.88		5.28
H	15		15.85
J1	2.49		2.69
L	2.29		2.79
L1	1.27		1.40
L2	1.30		1.75
R		0.4	
V2	0°		8°

Figure 43. D²PAK (SMD 2L Wooseok-subcon.) drawing

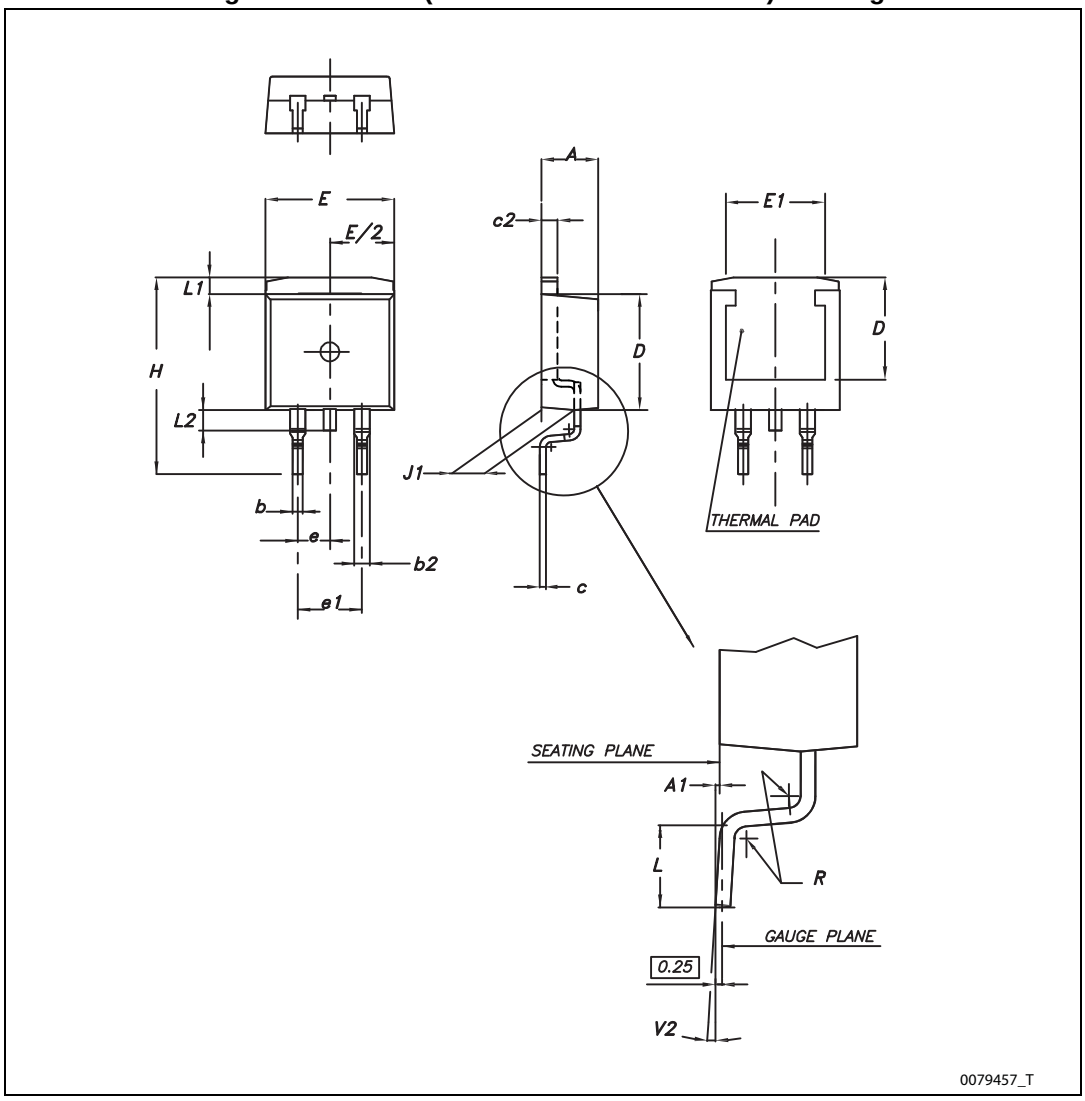

Table 24. D²PAK (SMD 2L Wooseok-subcon.) mechanical data

Dim.	mm		
	Min.	Typ.	Max.
A	4.30		4.70
A1	0		0.20
b	0.70		0.90
b2	1.17		1.37
c	0.45	0.50	0.60
c2	1.25	1.30	1.40
D	9	9.20	9.40
D1	7.50		
E	10		10.40
E1	8.50		
e		2.54	
e1	4.88		5.08
H	15		15.30
J1	2.20		2.60
L	1.79		2.79
L1	1		1.40
L2	1.20		1.60
R		0.30	
V2	0°		3°

Figure 44. D²PAK (SMD 2L Wooseok-subcon.) footprint

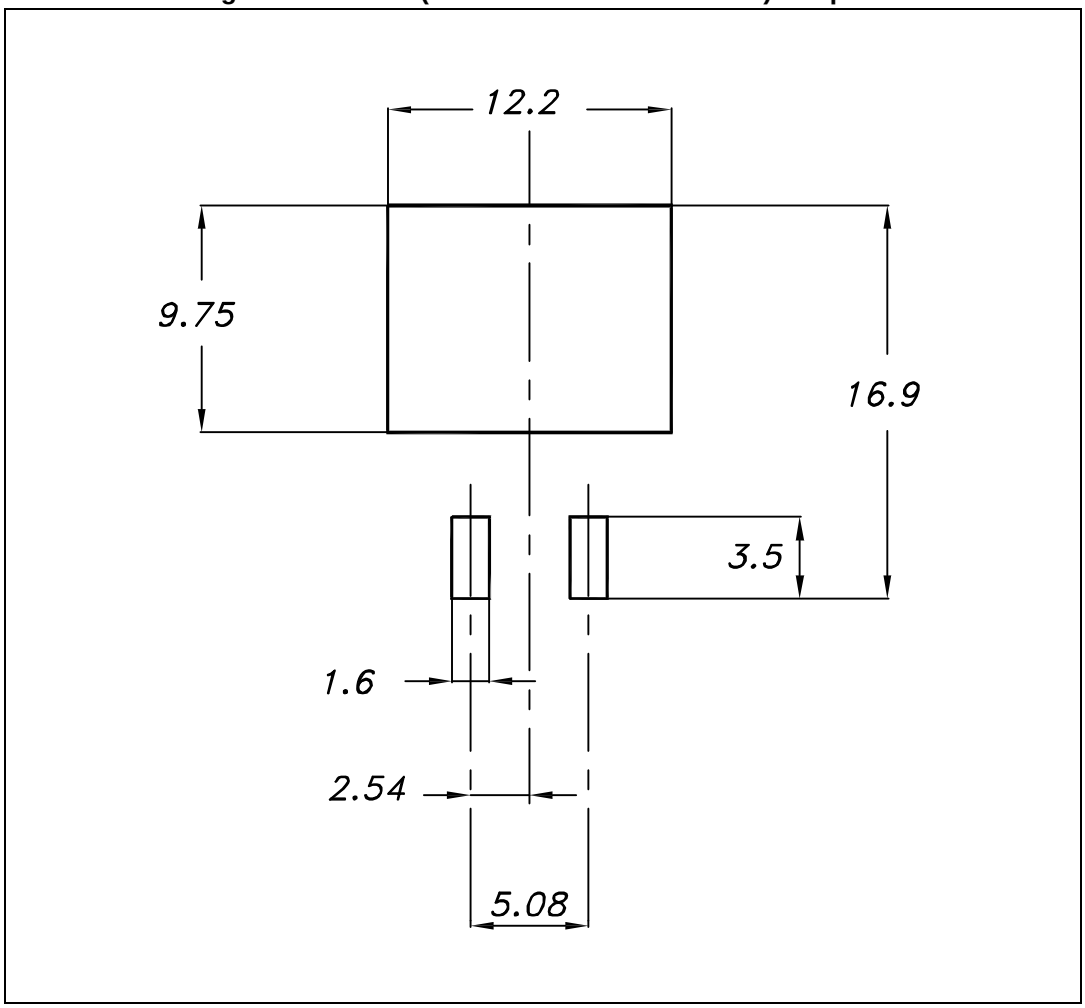

9 Packaging mechanical data

Figure 45. Tube for TO-220 (dual gauge) (mm.)

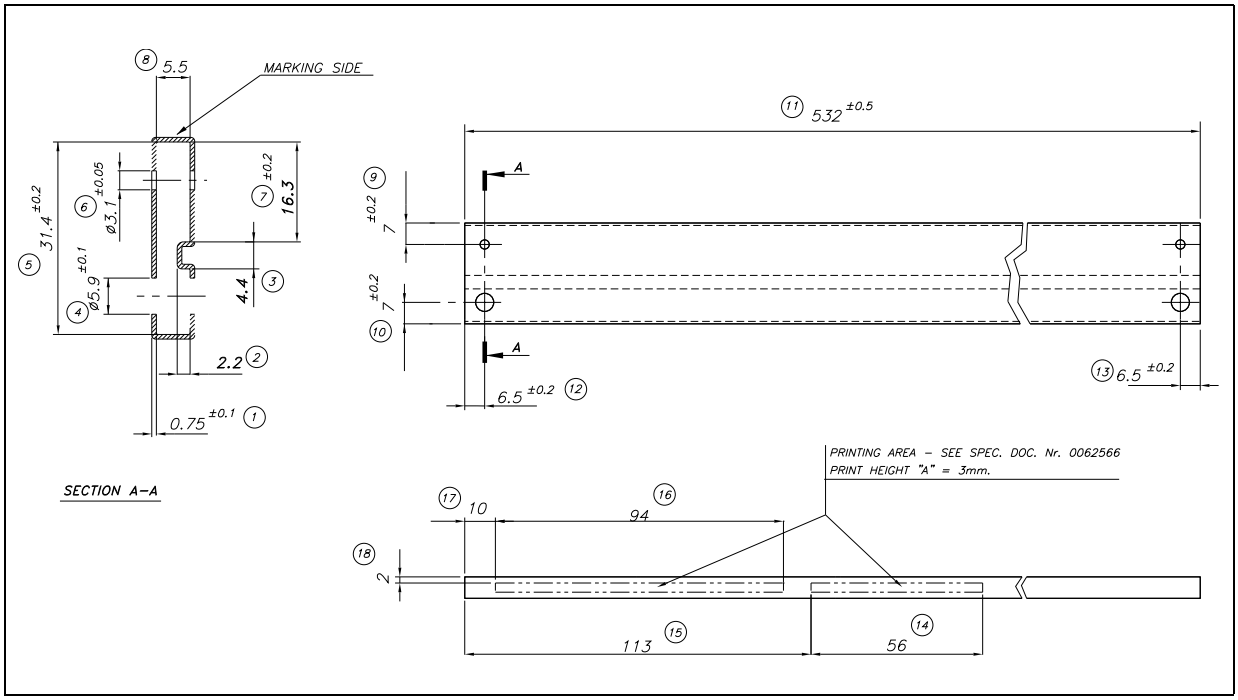

Figure 46. Tube for TO-220 (single gauge) (mm.)

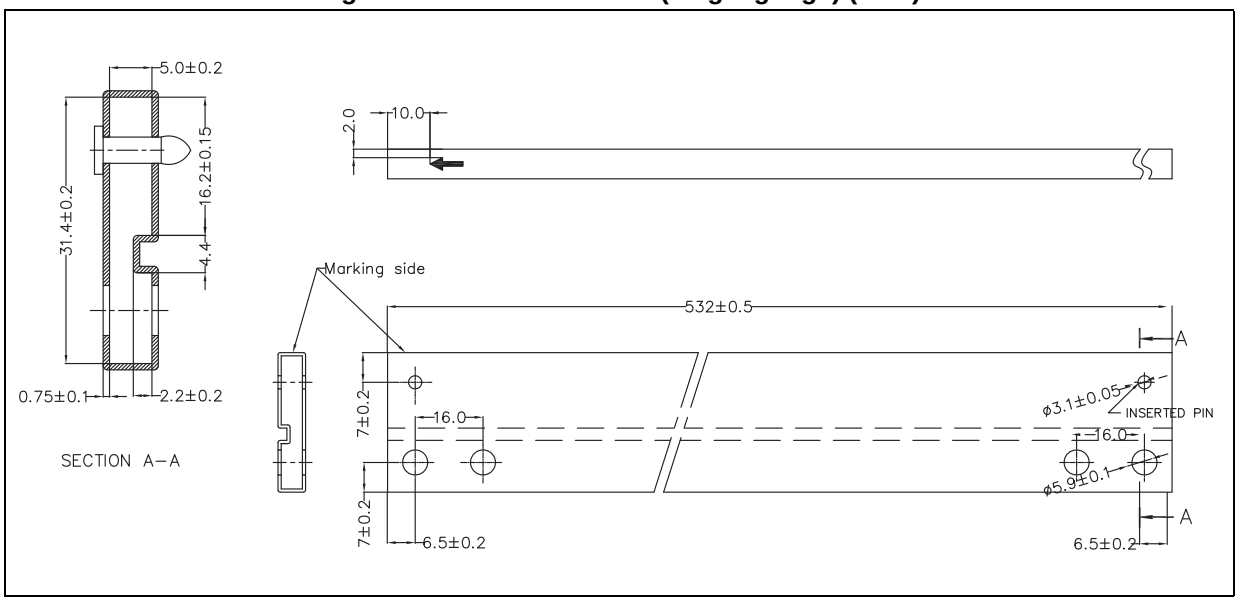

Figure 47. Tape for DPAK and D^{2}PAK

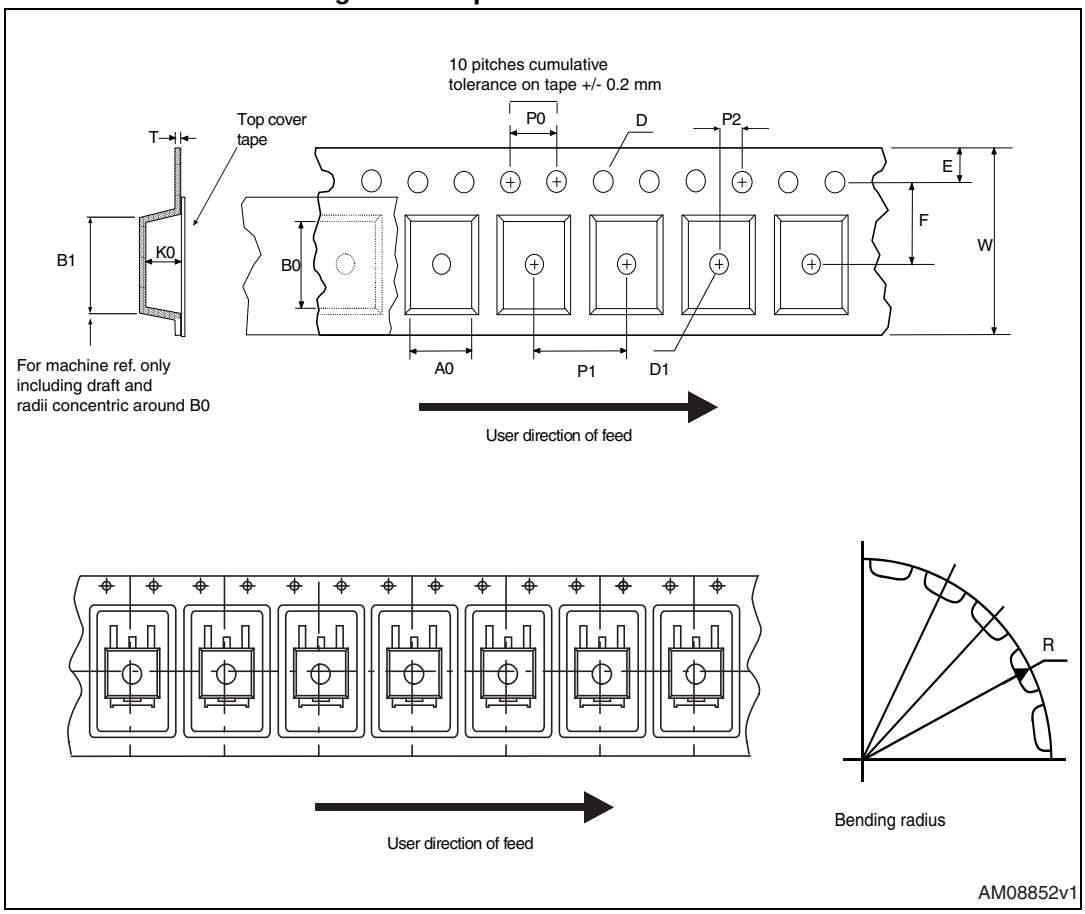

Figure 48. Reel for DPAK and D^{2}PAK

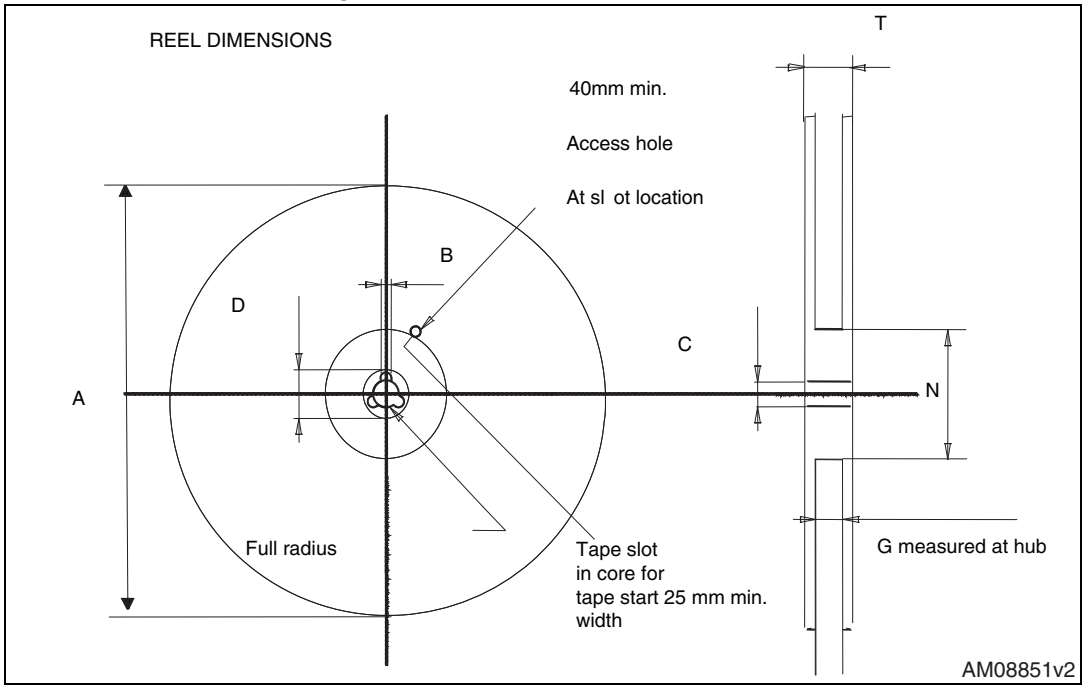

Table 25. DPAK and D²PAK tape and reel mechanical data

Tape			Reel		
Dim.	mm		Dim.	mm	
	Min.	Max.		Min.	Max.
A0	6.8	7	A		330
B0	10.4	10.6	B	1.5	
B1		12.1	C	12.8	13.2
D	1.5	1.6	D	20.2	
D1	1.5		G	16.4	18.4
E	1.65	1.85	N	50	
F	7.4	7.6	T		22.4
K0	2.55	2.75			
P0	3.9	4.1	Base qty.		2500
P1	7.9	8.1	Bulk qty.		2500
P2	1.9	2.1			
R	40				
T	0.25	0.35			
W	15.7	16.3			

10 Order codes

Table 26. Order codes

Part numbers	Order codes					
	TO-220 (single gauge)	TO-220 (dual gauge)	DPAK	D²PAK	TO-220FP	Output voltages
L7805C	L7805CV		L7805CDT-TR	L7805CD2T-TR	L7805CP	5 V
		L7805CV-DG				5 V
L7805AB	L7805ABV			L7805ABD2T-TR	L7805ABP	5 V
		L7805ABV-DG				5 V
L7805AC	L7805ACV			L7805ACD2T-TR	L7805ACP	5 V
		L7805ACV-DG				5 V
L7806C	L7806CV			L7806CD2T-TR		6 V
		L7806CV-DG				6 V
L7806AB	L7806ABV			L7806ABD2T-TR		6 V
		L7806ABV-DG				6 V
L7806AC	L7806ACV					6 V
		L7806ACV-DG				6 V
L7808C	L7808CV			L7808CD2T-TR		8 V
		L7808CV-DG				8 V
L7808AB	L7808ABV			L7808ABD2T-TR		8 V
		L7808ABV-DG				8 V
L7808AC	L7808ACV					8 V
		L7808ACV-DG				8 V
L7885C	L7885CV					8.5 V
L7809C	L7809CV			L7809CD2T-TR	L7809CP	9 V
		L7809CV-DG				9 V
L7809AB	L7809ABV			L7809ABD2T-TR		9 V
	L7809ABV-DG					9 V
L7809AC	L7809ACV					9 V
L7812C	L7812CV			L7812CD2T-TR	L7812CP	12 V
		L7812CV-DG				12 V
L7812AB	L7812ABV			L7812ABD2T-TR		12 V
		L7812ABV-DG				12 V
L7812AC	L7812ACV			L7812ACD2T-TR		12 V
		L7812ACV-DG				12 V

Table 26. Order codes (continued)

Part numbers	Order codes					
	TO-220 (single gauge)	TO-220 (dual gauge)	DPAK	D²PAK	TO-220FP	Output voltages
L7815C	L7815CV			L7815CD2T-TR	L7815CP	15 V
		L7815CV-DG				15 V
L7815AB	L7815ABV			L7815ABD2T-TR		15 V
		L7815ABV-DG				15 V
L7815AC	L7815ACV			L7815ACD2T-TR		15 V
		L7815ACV-DG				15 V
L7818C	L7818CV					18 V
		L7818CV-DG				18 V
L7824C	L7824CV			L7824CD2T-TR	L7824CP	24 V
		L7824CV-DG				24 V
L7824AB	L7824ABV					24 V
		L7824ABV-DG				24 V
L7824AC	L7824ACV					24 V
		L7824ACV-DG				24 V

11 Revision history

Table 27. Document revision history

Date	Revision	Changes
21-Jun-2004	12	Document updating.
03-Aug-2006	13	Order codes has been updated and new template.
19-Jan-2007	14	D²PAK mechanical data has been updated and add footprint data.
31-May-2007	15	Order codes has been updated.
29-Aug-2007	16	Added *Table 1* in cover page.
11-Dec-2007	17	Modified: *Table 26*.
06-Feb-2008	18	Added: TO-220 mechanical data *Figure 38 on page 38* , *Figure 39 on page 39*, and *Table 23 on page 37*. Modified: *Table 26 on page 55*.
18-Mar-2008	19	Added: *Table 29: DPAK mechanical data on page 50*, *Table 30: Tape and reel DPAK mechanical data on page 52*. Modified: *Table 26 on page 55*.
26-Jan-2010	20	Modified *Table 1 on page 1* and *Table 23 on page 37*, added: *Figure 38 on page 38* and *Figure 39 on page 39*, *Figure 45 on page 52* and *Figure 46 on page 52*.
04-Mar-2010	21	Added notes *Figure 38 on page 38*.
08-Sep-2010	22	Modified *Table 26 on page 55*.
23-Nov-2010	23	Added: T_J = 25 °C test condition in ΔV_O on *Table 3*, *4*, *5*, *6*, *7*, *8* and *Table 9*.
16-Sep-2011	24	Modified title on page 1.
30-Nov-2011	25	Added: order codes L7805CV-DG, L7806CV-DG, L7808ABV-DG, L7812CV-DG and L7815CV-DG *Table 26 on page 55*.
08-Feb-2012	26	Added: order codes L7805ACV-DG, L7805ABV-DG, L7806ABV-DG, L7808CV-DG, L7809CV-DG, L7812ACV-DG, L7818CV-DG, L7824CV-DG *Table 26 on page 55*.
27-Mar-2012	27	Added: order codes L7812ABV-DG, L7815ABV-DG *Table 26 on page 55*.
27-Apr-2012	28	Modified: V_I = 10.4 to 23 V ==> V_I = 11.4 to 23 V test conditon value Line regulation *Table 6 on page 12*.
10-May-2012	29	Added: order codes L7806ACV-DG, L7808ACV-DG, L7815ACV-DG, L7824ABV-DG and L7824ACV-DG *Table 26 on page 55*.
19-Sep-2012	30	Modified load regulation units from V to mV in *Table 3* to *Table 9*.
12-Mar-2013	31	Modified: V_O output voltage at 25 °C min. value 14.4 V *Table 16 on page 22*.
04-Mar-2014	32	Part numbers L78xx, L78xxC, L78xxAB, L78xxAC changed to L78. Removed TO-3 package. Updated the description in cover page, *Section 2: Pin configuration*, *Section 3: Maximum ratings*, *Section 4: Test circuits*, *Section 5: Electrical characteristics*, *Section 6: Application information*, *Section 8: Package mechanical data* and *Table 26: Order codes*. Added *Section 9: Packaging mechanical data*. Minor text changes.

Please Read Carefully:

Information in this document is provided solely in connection with ST products. STMicroelectronics NV and its subsidiaries (“ST”) reserve the right to make changes, corrections, modifications or improvements, to this document, and the products and services described herein at any time, without notice.

All ST products are sold pursuant to ST’s terms and conditions of sale.

Purchasers are solely responsible for the choice, selection and use of the ST products and services described herein, and ST assumes no liability whatsoever relating to the choice, selection or use of the ST products and services described herein.

No license, express or implied, by estoppel or otherwise, to any intellectual property rights is granted under this document. If any part of this document refers to any third party products or services it shall not be deemed a license grant by ST for the use of such third party products or services, or any intellectual property contained therein or considered as a warranty covering the use in any manner whatsoever of such third party products or services or any intellectual property contained therein.

UNLESS OTHERWISE SET FORTH IN ST’S TERMS AND CONDITIONS OF SALE ST DISCLAIMS ANY EXPRESS OR IMPLIED WARRANTY WITH RESPECT TO THE USE AND/OR SALE OF ST PRODUCTS INCLUDING WITHOUT LIMITATION IMPLIED WARRANTIES OF MERCHANTABILITY, FITNESS FOR A PARTICULAR PURPOSE (AND THEIR EQUIVALENTS UNDER THE LAWS OF ANY JURISDICTION), OR INFRINGEMENT OF ANY PATENT, COPYRIGHT OR OTHER INTELLECTUAL PROPERTY RIGHT.

ST PRODUCTS ARE NOT DESIGNED OR AUTHORIZED FOR USE IN: (A) SAFETY CRITICAL APPLICATIONS SUCH AS LIFE SUPPORTING, ACTIVE IMPLANTED DEVICES OR SYSTEMS WITH PRODUCT FUNCTIONAL SAFETY REQUIREMENTS; (B) AERONAUTIC APPLICATIONS; (C) AUTOMOTIVE APPLICATIONS OR ENVIRONMENTS, AND/OR (D) AEROSPACE APPLICATIONS OR ENVIRONMENTS. WHERE ST PRODUCTS ARE NOT DESIGNED FOR SUCH USE, THE PURCHASER SHALL USE PRODUCTS AT PURCHASER’S SOLE RISK, EVEN IF ST HAS BEEN INFORMED IN WRITING OF SUCH USAGE, UNLESS A PRODUCT IS EXPRESSLY DESIGNATED BY ST AS BEING INTENDED FOR “AUTOMOTIVE, AUTOMOTIVE SAFETY OR MEDICAL” INDUSTRY DOMAINS ACCORDING TO ST PRODUCT DESIGN SPECIFICATIONS. PRODUCTS FORMALLY ESCC, QML OR JAN QUALIFIED ARE DEEMED SUITABLE FOR USE IN AEROSPACE BY THE CORRESPONDING GOVERNMENTAL AGENCY.

Resale of ST products with provisions different from the statements and/or technical features set forth in this document shall immediately void any warranty granted by ST for the ST product or service described herein and shall not create or extend in any manner whatsoever, any liability of ST.

ST and the ST logo are trademarks or registered trademarks of ST in various countries.
Information in this document supersedes and replaces all information previously supplied.
The ST logo is a registered trademark of STMicroelectronics. All other names are the property of their respective owners.

© 2014 STMicroelectronics - All rights reserved

STMicroelectronics group of companies

Australia - Belgium - Brazil - Canada - China - Czech Republic - Finland - France - Germany - Hong Kong - India - Israel - Italy - Japan - Malaysia - Malta - Morocco - Philippines - Singapore - Spain - Sweden - Switzerland - United Kingdom - United States of America

www.st.com