Alustar-G2-15

Product data sheet

Technical data

Beam angle	15°
Supply	Constant current
Operating current	Up to 1500 mA
Reverse voltage	Up to 5 Vr
Control	Yes*
Protection class	IP 54
Ambient temperature	-25°C to +50°C
Connection	Open wire ends
Housing	Aluminium
Weight	0,06 kg

* Dimming possible by current reduction

Types

Dimensions

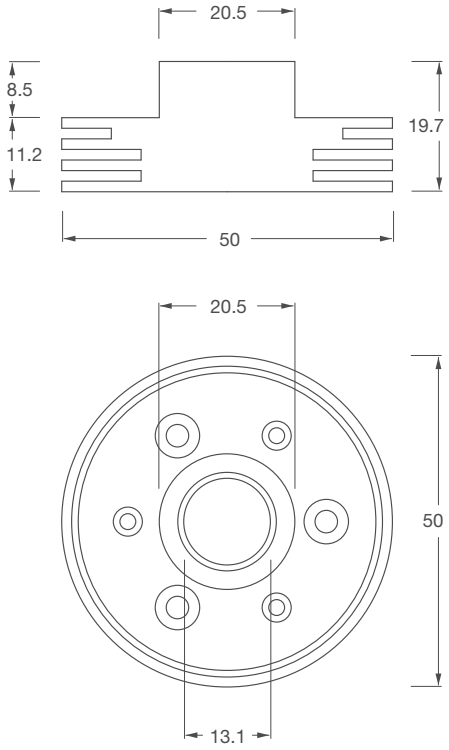

Dimensions in mm

Beam characteristics

15°

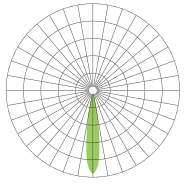

Installation

The product needs to be mounted with M3-screws.

sales@prom-elec.com / ООО ПРОМЭЛЕКТРОНИКА

Alustar-G2-15

Product data sheet

Photometric data

Article number	Photometric code	Colour temperature	Wavelength	Light colour	Colour coordinates x / y	Colour rendering index Ra	Colour consistency	Luminous flux @ 350 mA	Luminous flux @ 700 mA	Luminous flux @ 1000 mA
9009385	830/559	3000 K	---	Warm white	0,4344 / 0,4030	80	5 SDCM	101 lm	189 lm	257 lm
9009386	840/559	4000 K	---	Neutral white	0,3826 / 0,3800	80	5 SDCM	104 lm	194 lm	264 lm
9009387	757/559	5700 K	---	Cool white	0,3332 / 0,3516	70	5 SDCM	121 lm	228 lm	309 lm
9009388	---	---	625 nm	Red	---	---	---	58 lm	105 lm	137 lm
9009389	---	---	590 nm	Yellow	---	---	---	61 lm	110 lm	143 lm
9009390	---	---	528 nm	Green	---	---	---	92 lm	166 lm	216 lm
9009391	---	---	475 nm	Blue	---	---	---	33 lm	59 lm	77 lm

Colour coordinates

Colour temperature 3.000 K

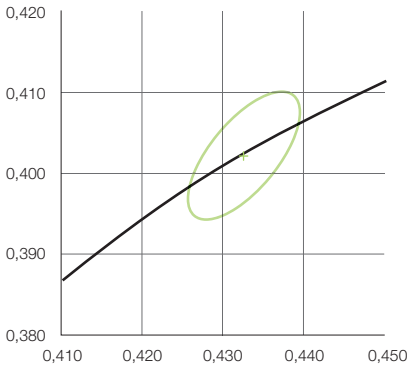

Colour temperature 4.000 K

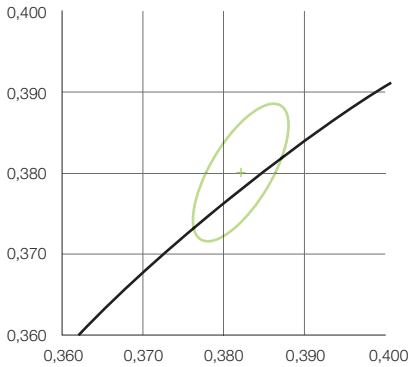

Colour temperature 5.700 K

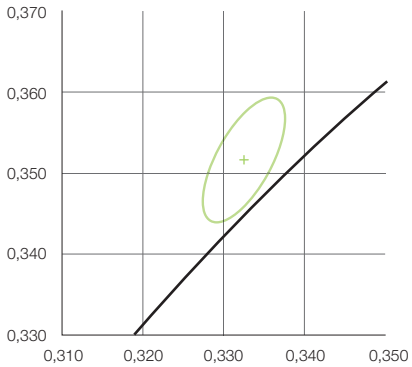

Alustar-G2-15

Product data sheet

More data

Article number	Forward voltage @ 350 mA	Forward voltage @ 700 mA	Forward voltage @ 1000 mA	Rated power @ 350 mA	Rated power @ 700 mA	Rated power @ 1000 mA	Lifetime @ 1000 mA	Tc max @ 1000 mA
9009385	2,80 Vf	2,93 Vf	3,02 Vf	1,0 W	2,0 W	3,0 W	L80 B10 >48.000 h	45°C
9009386	2,80 Vf	2,93 Vf	3,02 Vf	1,0 W	2,0 W	3,0 W	L80 B10 >48.000 h	45°C
9009387	2,80 Vf	2,93 Vf	3,02 Vf	1,0 W	2,0 W	3,0 W	L80 B10 >48.000 h	45°C
9009388	2,20 Vf	2,44 Vf	2,63 Vf	0,8 W	1,7 W	2,6 W	L80 B10 >36.000 h	45°C
9009389	3,05 Vf	3,19 Vf	3,27 Vf	1,1 W	2,2 W	3,3 W	L80 B10 >36.000 h	45°C
9009390	3,20 Vf	3,50 Vf	3,68 Vf	1,1 W	2,4 W	3,7 W	L80 B10 >36.000 h	45°C
9009391	3,10 Vf	3,28 Vf	3,39 Vf	1,1 W	2,3 W	3,4 W	L80 B10 >48.000 h	45°C

Order data

Article number	Article name
9009385	ALUSTAR-G2-15-SW830-1A-54
9009386	ALUSTAR-G2-15-SW840-1A-54
9009387	ALUSTAR-G2-15-SW757-1A-54
9009388	ALUSTAR-G2-15-SC625-1A-54
9009389	ALUSTAR-G2-15-SC590-1A-54
9009390	ALUSTAR-G2-15-SC528-1A-54
9009391	ALUSTAR-G2-15-SC475-1A-54

Caution

EN 62471:2008
Risk group 2

ATTENTION harmful optical radiation possible.
Do not look into the lamp for long periods during operation.
May be harmful to eyes.

Standards

EN 62031:2015
EN 62471:2008
2011/65/EU
2009/125/EU
in Anlehnung an IEC 62717

Alustar-G2-15

Product data sheet

Important notes

All technical parameters apply to the entire product. Due to the complex manufacturing process of light-emitting diodes, the indicated typical LED parameters are purely statistical variables and may vary.

Mercury content	0,0 mg
Mercury-free	yes
Professional disposal according to WEEE	yes

Notes to the life time

Decisive factors for the life time are the ambient temperature and the operating temperature (Tc/Tp). Exceeding the permissible limits results and the permitted operating voltage in a substantial reduction of the life time and can even lead to the destruction of the products. The specified life time represents a statistical quantity.

The heat sink must provide sufficient heat dissipation so that the maximum permissible operating temperature is not exceeded. The measurement of the operating temperature must be in accordance with EN 60598-1.

Notes to electrical and photometric data

Colour coordinates according to CIE 1931
Rated ambient temperature: ta = 25°
Measuring tolerance colour coordinates (x/y) +/- 0,005
Tolerance range of electrical / photometric data: +/- 10%

Disclaimer

Changes and errors excepted. Due to the continuous development of all products, technical and design changes can occur at any time. Make sure that you always use the latest version of the data sheet.

Further product data as well as current information can be found at www.ledxon.com

Notes to the installation

While installation the relevant specifications and standards must be observed. For optimum operation we recommend installation only on rigid and stationary surfaces. The electrical connection must be made in a voltage-free state.

The correct polarity for the connection lines must be observed upon start-up. Incorrect polarity may result in the destruction. The products are electrified by connecting leads to the provided plug terminal connection. The maximum permitted cable cross-section must be observed in this process. The products are delivered without cabling. When installing these modules, standard ESD safety precautions must be complied with.

High mechanical load must be avoided during installation. Powerful compression forces, in particular on the light area, result in damage to the components as well as the conducting paths. For fixing we recommend using polyamide screws.