•

KW1-521ASA

DATA SHEET

QC: ENG: Prepared By:

sales@prom-elec.com / ООО ПРОМЭЛЕКТРОНИКА

Features

- 0.52″Single Digit Super Red
- Common Anode (Common PIN 3 And 8PIN)
- Gray Face， White Segment

Package Dimension:

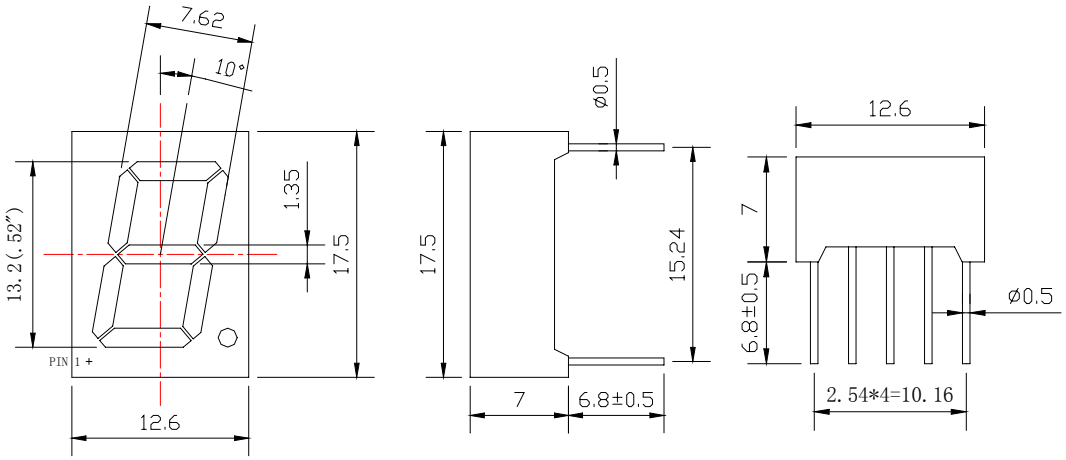

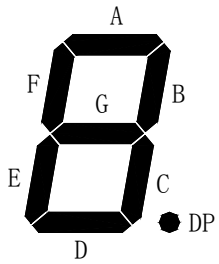

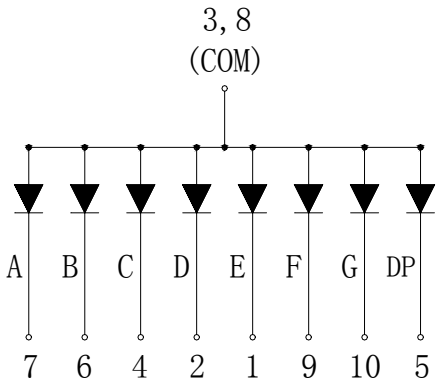

1. CATHODE E
2. CATHODE D
3. COMMON ANODE
4. CATHODE C
5. CATHODE DP
6. CATHODE B
7. CATHODE A
8. COMMON ANODE
9. CATHODE F
10. CATHODE G

Part NO.	Face Color	Source Color
KW1-521ASA	Gray	Red

Notes:

1. All dimensions are in millimeters (inches).
2. Tolerance is ±0.25(.010”)mm unless otherwise noted.
3. Lead spacing is measured where the leads emerge from the package.
4. Specifications are subject to change without notice.

Absolute Maximum Ratings at Ta=25℃

Parameter	MAX.	Unit
Power Dissipation	100	mW
Peak Forward Current (1/10 Duty Cycle, 0.1ms Pulse Width)	100	mA
Continuous Forward Current	50	mA
Derating Linear From 50℃	0.4	mA/℃
Reverse Voltage	5	V
Operating Temperature Range	-40℃ to +80℃	
Storage Temperature Range	-40℃ to +80℃	
Lead Soldering Temperature [4mm(.157") From Body]	260℃ for 5 Seconds	

Electrical Optical Characteristics at Ta=25℃

Parameter	Symbol	Min.	Typ.	Max.	Unit	Test Condition
Luminous Intensity	Iv	2.8	3.6	---	mcd	I_F=20mA (Note 1)
Viewing Angle	$2\theta_{1/2}$	---	---	---	Deg	(Note 2)
Peak Emission Wavelength	λp	655	660	665	nm	I_F=20mA
Dominant Wavelength	λd	635	640	645	nm	I_F=20mA (Note 3)
Spectral Line Half-Width	$\triangle\lambda$	19	24	29	nm	I_F=20mA
Forward Voltage	V_F	---	1.85	2.5	V	I_F=20mA
Reverse Current	I_R	---	---	100	μA	V_R=5V

Note:

1. Luminous intensity is measured with a light sensor and filter combination that approximates the CIE eye-response curve.
2. $\theta_{1/2}$ is the off-axis angle at which the luminous intensity is half the axial luminous intensity.
3. The dominant wavelength (λd) is derived from the CIE chromaticity diagram and represents the single wavelength which defines the color of the device.
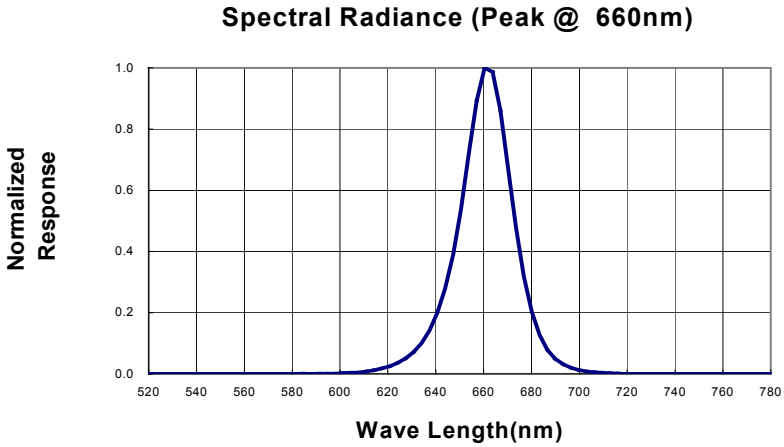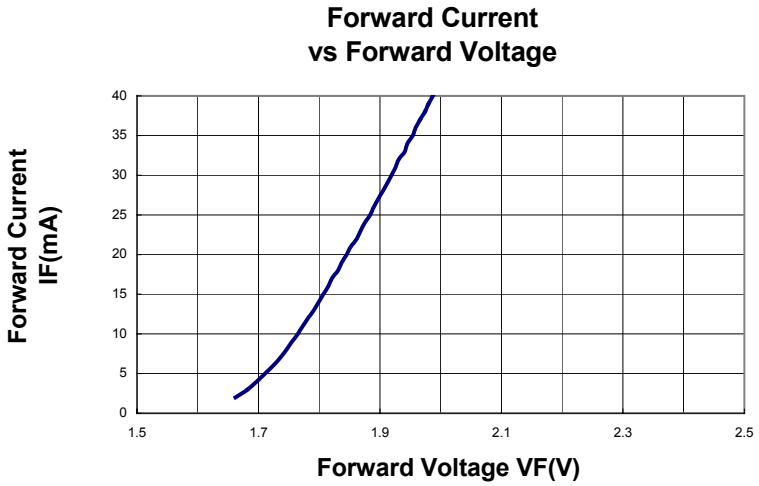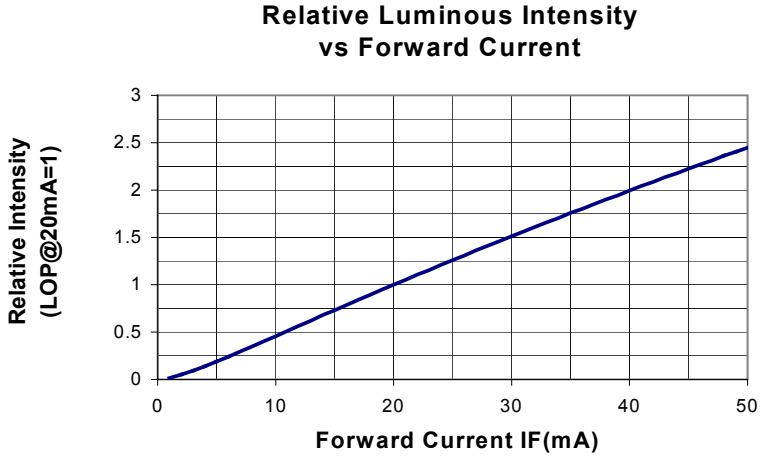
Typical Electrical / Optical Characteristics Curves
(25℃ Ambient Temperature Unless Otherwise Noted)