ALS40/41 Series, +105°C

Electronic Components KEMET CHARGED.

Overview

KEMET's ALS40/41 Series of screw terminal capacitors features the same high ripple currents and long-life characteristics as the ALS30/31 Series but can operate at higher temperatures. They are similarly suited for high reliability and long-life applications such as frequency converters, uninterruptible power supply (UPS) systems, and switch mode power supplies (SMPS) but the extended temperature range allows increased ripple currents at lower temperatures.

Applications

Typical applications for KEMET's ALS40/41 Series of capacitors include smoothing, energy storage or pulse operation in telecommunication demanding power supplies, process control, frequency inverters, drives, traction, welding, and measuring.

Benefits

- Compact size
- Long life, up to 9,000 hours at +105°C (V_R, I_R applied)
- High ripple current
- Excellent surge voltage capability
- Optimized designs available upon request

Click image above for interactive 3D content

Open PDF in Adobe Reader for full functionality

Part Number System

ALS4	0	A	153	DA	025	
Series	Stud Option	Termination	Capacitance Code (µF)	Size Code	Rated Voltage (VDC)	
Screw Terminal Aluminum Electrolytic	0 = Plain Can 1 = Threaded mounting stud	See Termination Table	First two digits represent significant figures. Third digit specifies number of zeros.	See Dimension Table	025 = 25 040 = 40 063 = 63 100 = 100 160 = 160 200 = 200	250 = 250 350 = 350 400 = 400 415 = 415 450 = 450 500 = 500

© KEMET Electronics Corporation • P.O. Box 5928 • Greenville, SC 29606 • 864-963-6300 • www.kemet.com

sales@prom-elec.com / ООО ПРОМЭЛЕКТРОНИКА

Performance Characteristics

Item	Performance Characteristics		
Capacitance Range	150 – 680,000 µF		
Rated Voltage	25 – 500 VDC		
Operating Temperature	-40 to +105°C		
Storage Temperature Range	-55 to +105°C		
Capacitance Tolerance	±20% at 100 Hz / +20°C		
Operational Lifetime	D (mm)	Rated Voltage and Ripple Current at +105°C (hours)	Rated Voltage at +105°C (hours)
	36	6,000	10,000
	51	7,000	11,000
	66	8,000	13,000
	77,90	9,000	15,000
End of Life Requirement	Δ C/C < ±10%, ESR < 2 x initial ESR value, IL < initial specified limit		
Shelf Life	2,000 hours at +85°C or 30,000 hours at +40°C 0 VDC		
Leakage Current	I = 0.003 CV or 6,000 (µA, whichever is smaller)		
	C = rated capacitance (µF), V = rated voltage (VDC). Voltage applied for 5 minutes at +20°C.		
Vibration Test Specifications		Procedure	Requirements
	Case Length < 220 mm	0.75 mm displacement amplitude or 10 g maximum acceleration. Vibration applied for three 2-hour sessions at 10 – 55 Hz (Capacitor clamped by body).	No leakage of electrolyte or other visible damage. Deviations in capacitance and tanδ from initial measurements must not exceed: Δ C/C < 5%
	Case Length ≥ 220 mm	0.35 mm displacement amplitude or 5 g maximum acceleration. Vibration applied for three 0.5 hour sessions at 10 – 55 Hz (Capacitor clamped by body).	
Standards	IEC 60384–4 long life grade 40/105/56		

Surge Voltage

Condition	Voltage (VDC)										
	25	40	63	100	200	250	350	400	415	450	500
≤ 30s Surge followed by a no load period of 330s, 1,000 cycles at +85°C	28.75	46	72.45	115	230	287.5	385	440	456.5	495	550
≤ 500 ms surge, 100 cycles at 20°C, occurring randomly throughout the life of the capacitor					350	400	500	520	530	550	600

Test Method & Performance

Endurance Life Test		
Conditions	Performance	
Temperature	+105°C	
Test Duration	2,000 hours	
Ripple Current	Rated ripple current in specified table	
Voltage	The sum of DC voltage and the peak AC voltage must not exceed the rated voltage of the capacitor	
Performance	**The following specifications will be satisfied when the capacitor is tested at +20°C:**	
Capacitance Change	≤ 160 V	Within 15% of the initial value
	≥ 160 V	Within 10% of the initial value
Equivalent Series Resistance	Does not exceed 200% of the initial value	
Leakage Current	Does not exceed leakage current limit	

Dimensions – Millimeters

Size Code	Dimensions in mm						Mounting Clip	Approximate Weight Grams
	D	L	LT	S	V	Mounting Stud (M x H)		
	±1	±2	±1	±0.5	Nominal	±1		
DA	36	52	58.5	12.8	8	M8 x 12	V3/H2/2736	75
DB	36	62	67.5	12.8	8	M8 x 12	V3/H2/2736	90
DE	36	82	87.5	12.8	8	M8 x 12	V3/H2/2736	115
DF	36	105	111.5	12.8	8	M8 x 12	V3/H2/2736	140
KE	51	82	86.5	22.2	13.7	M12 x 16	V4/2737	220
KF	51	105	110.5	22.2	13.7	M12 x 16	V4/2737	300
MF	66	105	110.5	28.5	15.8	M12 x 16	V10/2738	505
ND	77	75	79.5	31.8	19	M12 x 16	V11	495
NF	77	105	110.5	31.8	19	M12 x 16	V11	690
NP	77	146	150.5	31.8	19	M12 x 16	V11	960
NT	77	220	224.5	31.8	19	M12 x 16	V11	1450
QC	90	67	71.5	31.8	25	M12 x 16	V90	615
QD	90	75	79.5	31.8	25	M12 x 16	V90	690
QH	90	98	103.5	31.8	25	M12 x 16	V90	900
QP	90	146	149.5	31.8	25	M12 x 16	V90	1345
QT	90	220	223.5	31.8	25	M12 x 16	V90	2000

Note: Dimensions include sleeving. LT listed is for A-type termination code. Information for other termination codes is available upon request.

Termination Tables

Termination Code	A	C	G
Diameter (mm)			
36	•		
51	•		
66	•	•	
77	•	•	•
90	•	•	•

Termination Code	Thread	Termination Style	T	DT	Thread Depth (TD)	Z
			± 0.5	± 0.5	Minimum	Nominal
Standard Termination Option						
A (D = 36)	M5	Round	7.14	8	10	
A (D > 36)	M5	Oval	5.5	13	10	10
Other Termination Options						
C	M6	Round	5.5	13	10	
G	M6	Round	6.35	17	11.8	
Dimensions in mm						

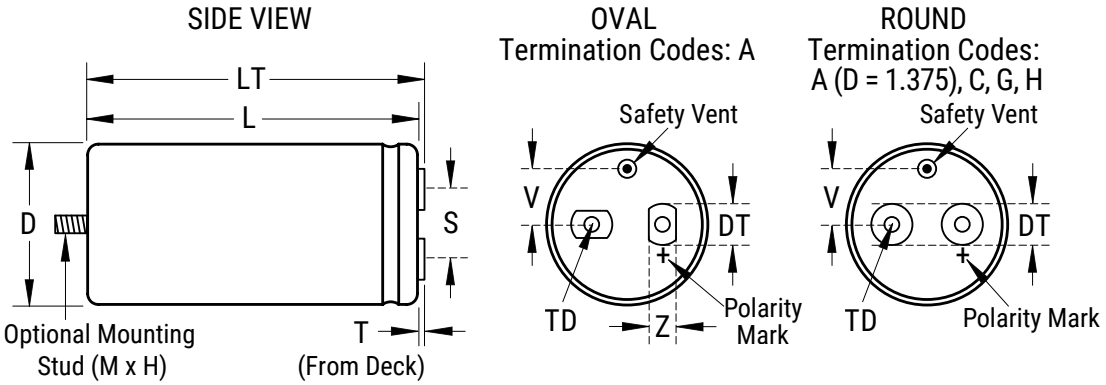

Case Polarity

Due to the presence of electrolyte in the capacitor, the aluminum can and stud mounting will essentially be at the same polarity as the negative terminal. We recommend that the stud and can be insulated (see accessories for insulating nuts).

Terminations

Aluminum inserts with M5 threads as standard, maximum torque 2NM. Optional M6 threaded inserts have a maximum torque 4NM. Maximum torque for stud mounting M8:4NM and M12:8NM.

Shelf Life

The capacitance, ESR and impedance of a capacitor will not change significantly after extended storage periods, however the leakage current will very slowly increase. KEMET products are particularly stable and allow a shelf life in excess of three years at 40°C. See sectional specification under each product series for specific data.

Re-age (Reforming) Procedure

Apply the rated voltage to the capacitor at room temperature for a period of one hour, or until the leakage current has fallen to a steady value below the specified limit. During re-aging a maximum charging current of twice the specified leakage current or 5 mA (whichever is greater) is suggested.

Reliability

The reliability of a component can be defined as the probability that it will perform satisfactorily under a given set of conditions for a given length of time.

In practice, it is impossible to predict with absolute certainty how any individual component will perform; thus, we must utilize probability theory. It is also necessary to clearly define the level of stress involved (e.g. operating voltage, ripple current, temperature and time). Finally, the meaning of satisfactory performance must be defined by specifying a set of conditions which determine the end of life of the component.

Reliability as a function of time, R(t), is normally expressed as: $R(t)=e^{-\lambda t}$
where R(t) is the probability that the component will perform satisfactorily for time t, and λ is the failure rate.

Failure Rate

The failure rate is the number of components failing per unit time. The failure rate of most electronic components follows the characteristic pattern:

- Early failures are removed during the manufacturing process.
- The operational life is characterized by a constant failure rate.
- The wear out period is characterized by a rapidly increasing failure rate.

The failures in time (FIT) are given with a 60% confidence level for the various type codes. By convention, FIT is expressed as 1×10^{-9} failures per hour. Failure rate is also expressed as a percentage of failures per 1,000 hours.
e.g., 100 FIT = 1×10^{-7} failures per hour = 0.01%/1,000 hours

End of Life Definition
Catastrophic Failure: short circuit, open circuit or safety vent operation
Parametric Failure:

- Change in capacitance > ±10%
- Leakage current > specified limit
- ESR > 2 x initial ESR value

MTBF

The mean time between failures (MTBF) is simply the inverse of the failure rate.
MTBF= 1/λ

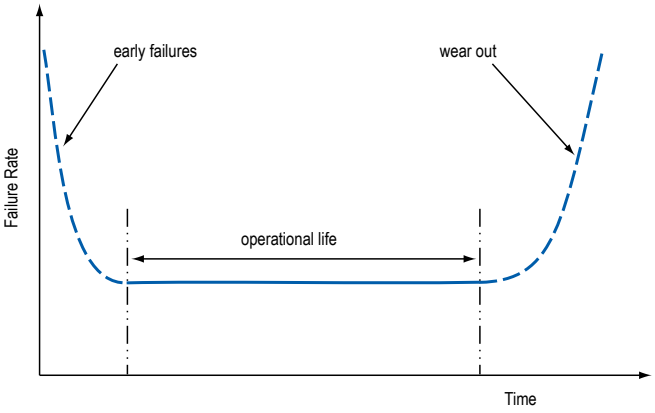

The failure rate is derived from our periodic test results. The failure rate (λ_R) is, therefore, only given at test temperature for life tests. An estimation is also given at 40°C. The expected failure rate for this capacitor range is based on our periodic test results for capacitors with structural similarity. Failure rate is frequently quoted in FIT (Failures In Time) where 1 FIT = 1 x 10^{-9} failures per hour. Failure rate per hour includes both catastrophic and parametric failures.

T_a	Failure Rate per Hour
85°C	220 FIT
40°C	10 FIT

Environmental Compliance

As an environmentally conscious company, KEMET is working continuously with improvements concerning the environmental effects of both our capacitors and their production. In Europe (RoHS Directive) and in some other geographical areas like China, legislation has been put in place to prevent the use of some hazardous materials, such as lead (Pb), in electronic equipment. All products in this catalog are produced to help our customers' obligations to guarantee their products and fulfill these legislative requirements. The only material of concern in our products has been lead (Pb), which has been removed from all designs to fulfill the requirement of containing less than 0.1% of lead in any homogeneous material. KEMET will closely follow any changes in legislation world wide and makes any necessary changes in its products, whenever needed.

Some customer segments such as medical, military and automotive electronics may still require the use of lead in electrode coatings. To clarify the situation and distinguish products from each other, a special symbol is used on the packaging labels for RoHS compatible capacitors.

Because of customer requirements, there may appear additional markings such as LF = Lead Free or LFW = Lead Free Wires on the label.

Table 1 – Ratings & Part Number Reference

VDC	Rated Capacitance	Size Code	Case Size	Ripple Current		ESR Maximum	Impedance Maximum	Part Number
	100 Hz 20°C (µF)		D x L (mm)	100 Hz 105°C (A)	10 kHz 105°C (A)	100 Hz 20°C (mΩ)	10 kHz 20°C (mΩ)	
25	15000	DA	36 x 52	6.9	7.3	24	20	ALS4(1)(2)153DA025
25	22000	DB	36 x 62	8.4	8.8	17	15	ALS4(1)(2)223DB025
25	33000	DE	36 x 82	11.1	11.7	11	10	ALS4(1)(2)333DE025
25	47000	DF	36 x 105	14.0	14.7	9	8	ALS4(1)(2)473DF025
25	68000	KE	51 x 82	12.0	12.2	13	12	ALS4(1)(2)683KE025
25	100000	KF	51 x 105	16.4	16.7	9	8	ALS4(1)(2)104KF025
25	150000	ND	77 x 75	13.7	13.8	13	13	ALS4(1)(2)154ND025
25	150000	MF	66 x 105	23.8	24.1	6	6	ALS4(1)(2)154MF025
25	150000	QD	90 x 75	18.7	18.8	10	10	ALS4(1)(2)154QD025
25	220000	QC	90 x 67	18.6	19.2	9	8	ALS4(1)(2)224QC025
25	220000	NF	77 x 105	22.3	22.4	8	7	ALS4(1)(2)224NF025
25	330000	QH	90 x 98	22.3	22.4	8	8	ALS4(1)(2)334QH025
25	330000	NP	77 x 146	31.0	31.1	5	5	ALS4(1)(2)334NP025
25	470000	QP	90 x 146	36.9	37.1	4	4	ALS4(1)(2)474QP025
25	470000	NT	77 x 220	38.9	39.8	4	4	ALS4(1)(2)474NT025
25	680000	QT	90 x 220	47.0	48.1	4	3	ALS4(1)(2)684QT025
40	10000	DA	36 x 52	6.6	6.9	23	19	ALS4(1)(2)103DA040
40	10000	DB	36 x 62	8.1	8.7	19	16	ALS4(1)(2)103DB040
40	15000	DE	36 x 82	10.8	11.6	13	10	ALS4(1)(2)153DE040
40	22000	DF	36 x 105	13.6	14.5	10	8	ALS4(1)(2)223DF040
40	33000	KE	51 x 82	11.7	12.0	13	12	ALS4(1)(2)333KE040
40	47000	KF	51 x 105	16.2	16.6	9	8	ALS4(1)(2)473KF040
40	68000	ND	77 x 75	13.9	14.0	13	13	ALS4(1)(2)683ND040
40	100000	MF	66 x 105	20.6	20.8	7	7	ALS4(1)(2)104MF040
40	100000	QC	90 x 67	17.7	18.5	10	9	ALS4(1)(2)104QC040
40	100000	QD	90 x 75	16.0	16.1	12	11	ALS4(1)(2)104QD040
40	100000	NF	77 x 105	22.4	22.7	7	7	ALS4(1)(2)104NF040
40	150000	QH	90 x 98	22.6	22.8	8	8	ALS4(1)(2)154QH040
40	150000	NP	77 x 146	31.3	31.6	5	5	ALS4(1)(2)154NP040
40	220000	QP	90 x 146	36.8	37.1	4	4	ALS4(1)(2)224QP040
40	220000	NT	77 x 220	37.7	39.2	4	4	ALS4(1)(2)224NT040
40	330000	QT	90 x 220	45.6	47.0	4	4	ALS4(1)(2)334QT040
63	3300	DA	36 x 52	5.5	6.2	38	30	ALS4(1)(2)332DA063
63	4700	DB	36 x 62	6.7	7.5	27	22	ALS4(1)(2)472DB063
63	6800	DE	36 x 82	8.9	10.0	19	15	ALS4(1)(2)682DE063
63	10000	DF	36 x 105	11.2	12.6	13	10	ALS4(1)(2)103DF063
63	15000	KE	51 x 82	10.7	11.2	16	15	ALS4(1)(2)153KE063
63	22000	KF	51 x 105	14.7	15.3	11	10	ALS4(1)(2)223KF063
63	22000	ND	77 x 75	14.6	15.1	14	12	ALS4(1)(2)223ND063
63	33000	MF	66 x 105	21.3	22.2	8	7	ALS4(1)(2)333MF063
63	33000	QC	90 x 67	18.1	20.1	10	8	ALS4(1)(2)333QC063
63	33000	QD	90 x 75	17.1	17.5	11	11	ALS4(1)(2)333QD063
63	47000	NF	77 x 105	20.7	21.1	9	8	ALS4(1)(2)473NF063
63	47000	QH	90 x 98	24.4	25.1	8	7	ALS4(1)(2)473QH063
63	68000	NP	77 x 146	29.1	29.8	6	6	ALS4(1)(2)683NP063
63	100000	QP	90 x 146	34.5	35.2	5	5	ALS4(1)(2)104QP063
63	100000	NT	77 x 220	36.7	38.8	4	4	ALS4(1)(2)104NT063
63	150000	QT	90 x 220	44.4	46.5	4	4	ALS4(1)(2)154QT063
100	1500	DA	36 x 52	3.9	4.5	79	62	ALS4(1)(2)152DA100
100	2200	DB	36 x 62	4.8	5.5	56	44	ALS4(1)(2)222DB100
100	3300	DE	36 x 82	6.4	7.4	37	29	ALS4(1)(2)332DE100
100	4700	DF	36 x 105	8.1	9.3	26	21	ALS4(1)(2)472DF100
100	6800	KE	51 x 82	8.0	8.4	32	28	ALS4(1)(2)682KE100
100	10000	KF	51 x 105	10.9	11.5	21	18	ALS4(1)(2)103KF100
100	15000	ND	77 x 75	9.7	9.9	28	26	ALS4(1)(2)153ND100
100	15000	MF	66 x 105	15.8	16.7	14	12	ALS4(1)(2)153MF100
100	15000	QD	90 x 75	12.9	13.4	20	18	ALS4(1)(2)153QD100
VDC	Rated Capacitance	Size Code	Case Size	Ripple Current		ESR	Impedance	Part Number

(1) Mounting Code: 0 = plain can, 1 = threaded mounting stud
(2) Termination Code: See Termination Tables for available options

Table 1 – Ratings & Part Number Reference cont'd

VDC	Rated Capacitance	Size Code	Case Size	Ripple Current		ESR Maximum	Impedance Maximum	Part Number
	100 Hz 20°C (µF)		D x L (mm)	100 Hz 105°C (A)	10 kHz 105°C (A)	100 Hz 20°C (mΩ)	10 kHz 20°C (mΩ)	
100	22000	QC	90 x 67	14.3	15.2	17	16	ALS4(1)(2)223QC100
100	22000	NF	77 x 105	15.5	16.0	15	13	ALS4(1)(2)223NF100
100	22000	QH	90 x 98	18.4	19.0	13	11	ALS4(1)(2)223QH100
100	33000	NP	77 x 146	21.6	22.2	10	10	ALS4(1)(2)333NP100
100	47000	QP	90 x 146	25.9	26.5	9	8	ALS4(1)(2)473QP100
100	47000	NT	77 x 220	35.4	36.6	7	6	ALS4(1)(2)473NT100
100	100000	QT	90 x 220	37.2	37.9	6	6	ALS4(1)(2)104QT100
200	680	DA	36 x 52	2.9	4.0	195	154	ALS4(1)(2)681DA200
200	680	DB	36 x 62	3.3	4.6	188	147	ALS4(1)(2)681DB200
200	1000	DE	36 x 82	4.3	6.1	128	100	ALS4(1)(2)102DE200
200	1500	DF	36 x 105	5.6	7.8	86	67	ALS4(1)(2)152DF200
200	2200	KE	51 x 82	6.8	8.0	71	58	ALS4(1)(2)222KE200
200	3300	KF	51 x 105	9.1	10.9	47	38	ALS4(1)(2)332KF200
200	4700	ND	77 x 75	8.7	9.4	48	42	ALS4(1)(2)472ND200
200	6800	MF	66 x 105	12.9	14.5	27	23	ALS4(1)(2)682MF200
200	6800	QC	90 x 67	11.8	15.9	37	28	ALS4(1)(2)682QC200
200	6800	QD	90 x 75	10.9	11.7	36	32	ALS4(1)(2)682QD200
200	6800	NF	77 x 105	13.4	14.8	29	25	ALS4(1)(2)682NF200
200	10000	QH	90 x 98	15.4	16.6	23	20	ALS4(1)(2)103QH200
200	10000	NP	77 x 146	19.3	21.5	19	16	ALS4(1)(2)103NP200
200	15000	QP	90 x 146	24.2	26.5	14	12	ALS4(1)(2)153QP200
200	22000	NT	77 x 220	29.5	31.6	11	10	ALS4(1)(2)223NT200
200	33000	QT	90 x 220	34.3	36.4	10	8	ALS4(1)(2)333QT200
250	470	DA	36 x 52	2.5	3.9	235	174	ALS4(1)(2)471DA250
250	680	DB	36 x 62	3.2	4.8	164	122	ALS4(1)(2)681DB250
250	1000	DE	36 x 82	4.2	6.3	111	83	ALS4(1)(2)102DE250
250	1000	DF	36 x 105	4.7	7.5	108	79	ALS4(1)(2)102DF250
250	1500	KE	51 x 82	6.2	8.2	83	64	ALS4(1)(2)152KE250
250	2200	KF	51 x 105	8.3	11.1	56	42	ALS4(1)(2)222KF250
250	3300	ND	77 x 75	8.5	9.7	52	42	ALS4(1)(2)332ND250
250	4700	MF	66 x 105	12.3	15.0	30	24	ALS4(1)(2)472MF250
250	4700	QC	90 x 67	10.9	16.3	42	30	ALS4(1)(2)472QC250
250	4700	QD	90 x 75	10.7	12.1	38	32	ALS4(1)(2)472QD250
250	6800	NF	77 x 105	12.1	13.4	30	25	ALS4(1)(2)682NF250
250	6800	QH	90 x 98	15.1	17.3	25	20	ALS4(1)(2)682QH250
250	10000	NP	77 x 146	17.5	19.5	19	16	ALS4(1)(2)103NP250
250	15000	QP	90 x 146	21.9	23.9	14	12	ALS4(1)(2)153QP250
250	15000	NT	77 x 220	29.2	33.0	12	10	ALS4(1)(2)153NT250
250	22000	QT	90 x 220	34.1	38.2	11	9	ALS4(1)(2)223QT250
350	220	DA	36 x 52	1.8	4.5	457	303	ALS4(1)(2)221DA350
350	330	DB	36 x 62	2.4	5.7	307	204	ALS4(1)(2)331DB350
350	470	DE	36 x 82	3.0	7.2	215	143	ALS4(1)(2)471DE350
350	680	DF	36 x 105	3.9	8.9	149	99	ALS4(1)(2)681DF350
350	1000	KE	51 x 82	5.0	10.0	113	78	ALS4(1)(2)102KE350
350	1500	KF	51 x 105	6.8	12.5	75	52	ALS4(1)(2)152KF350
350	2200	ND	77 x 75	8.3	13.7	66	49	ALS4(1)(2)222ND350
350	2200	MF	66 x 105	9.8	17.9	51	35	ALS4(1)(2)222MF350
350	2200	QC	90 x 67	9.1	16.4	74	52	ALS4(1)(2)222QC350
350	2200	QD	90 x 75	9.4	17.8	56	40	ALS4(1)(2)222QD350
350	3300	NF	77 x 105	11.7	19.7	41	30	ALS4(1)(2)332NF350
350	4700	QH	90 x 98	14.6	23.2	31	23	ALS4(1)(2)472QH350
350	4700	NP	77 x 146	15.7	23.6	27	20	ALS4(1)(2)472NP350
350	6800	QP	90 x 146	20.3	29.7	19	14	ALS4(1)(2)682QP350
350	6800	NT	77 x 220	25.4	35.7	23	17	ALS4(1)(2)682NT350
350	10000	QT	90 x 220	31.0	42.7	21	16	ALS4(1)(2)103QT350
400	220	DA	36 x 52	2.0	4.9	542	349	ALS4(1)(2)221DA400
400	220	DB	36 x 62	2.1	5.4	537	344	ALS4(1)(2)221DB400
VDC	Rated Capacitance	Size Code	Case Size	Ripple Current		ESR	Impedance	Part Number

(1) Mounting Code: 0 = plain can, 1 = threaded mounting stud
(2) Termination Code: See Termination Tables for available options

Table 1 – Ratings & Part Number Reference cont'd

VDC	Rated Capacitance	Size Code	Case Size	Ripple Current		ESR Maximum	Impedance Maximum	Part Number
	100 Hz 20°C (µF)		D x L (mm)	100 Hz 105°C (A)	10 kHz 105°C (A)	100 Hz 20°C (mΩ)	10 kHz 20°C (mΩ)	
400	470	DE	36 x 82	3.2	7.8	254	164	ALS4(1)(2)471DE400
400	470	DF	36 x 105	3.5	8.5	251	161	ALS4(1)(2)471DF400
400	680	KE	51 x 82	4.2	9.8	183	121	ALS4(1)(2)681KE400
400	1000	KF	51 x 105	5.6	12.3	124	81	ALS4(1)(2)102KF400
400	1500	ND	77 x 75	7.6	13.9	93	64	ALS4(1)(2)152ND400
400	2200	MF	66 x 105	9.7	18.1	60	41	ALS4(1)(2)222MF400
400	2200	QC	90 x 67	9.4	15.9	63	44	ALS4(1)(2)222QC400
400	2200	QD	90 x 75	10.0	17.5	67	47	ALS4(1)(2)222QD400
400	2200	NF	77 x 105	10.6	19.8	62	42	ALS4(1)(2)222NF400
400	3300	QH	90 x 98	13.6	23.4	44	31	ALS4(1)(2)332QH400
400	4700	NP	77 x 146	15.4	22.6	33	23	ALS4(1)(2)472NP400
400	6800	QP	90 x 146	20.0	28.3	23	17	ALS4(1)(2)682QP400
400	6800	NT	77 x 220	23.5	33.3	21	15	ALS4(1)(2)682NT400
400	10000	QT	90 x 220	29.0	40.3	18	14	ALS4(1)(2)103QT400
415	220	DA	36 x 52	2.0	5.0	530	331	ALS4(1)(2)221DA415
415	220	DB	36 x 62	2.1	5.4	524	325	ALS4(1)(2)221DB415
415	330	DE	36 x 82	2.8	7.1	349	217	ALS4(1)(2)331DE415
415	470	DF	36 x 105	3.5	8.7	245	152	ALS4(1)(2)471DF415
415	680	KE	51 x 82	4.4	9.9	180	115	ALS4(1)(2)681KE415
415	1000	KF	51 x 105	5.8	12.3	122	77	ALS4(1)(2)102KF415
415	1500	ND	77 x 75	7.6	13.8	95	65	ALS4(1)(2)152ND415
415	2200	MF	66 x 105	9.7	18.1	60	39	ALS4(1)(2)222MF415
415	2200	QC	90 x 67	9.4	15.8	61	43	ALS4(1)(2)222QC415
415	2200	QD	90 x 75	10.0	17.3	67	47	ALS4(1)(2)222QD415
415	2200	NF	77 x 105	10.7	19.7	61	41	ALS4(1)(2)222NF415
415	3300	QH	90 x 98	13.6	23.3	44	30	ALS4(1)(2)332QH415
415	3300	NP	77 x 146	14.2	23.6	40	27	ALS4(1)(2)332NP415
415	4700	QP	90 x 146	18.5	29.8	29	19	ALS4(1)(2)472QP415
415	6800	NT	77 x 220	23.0	32.5	21	14	ALS4(1)(2)682NT415
415	10000	QT	90 x 220	28.3	39.3	18	14	ALS4(1)(2)103QT415
450	150	DA	36 x 52	1.8	4.5	721	360	ALS4(1)(2)151DA450
450	150	DB	36 x 62	1.9	4.8	715	356	ALS4(1)(2)151DB450
450	220	DE	36 x 82	2.5	6.2	487	242	ALS4(1)(2)221DE450
450	330	DF	36 x 105	3.2	7.9	325	162	ALS4(1)(2)331DF450
450	470	KE	51 x 82	4.1	9.0	239	123	ALS4(1)(2)471KE450
450	680	KF	51 x 105	5.3	11.3	164	84	ALS4(1)(2)681KF450
450	1000	ND	77 x 75	7.0	13.2	125	69	ALS4(1)(2)102ND450
450	1500	MF	66 x 105	8.9	17.1	79	42	ALS4(1)(2)152MF450
450	1500	QC	90 x 67	8.7	15.3	78	57	ALS4(1)(2)152QC450
450	1500	QD	90 x 75	9.3	16.7	87	49	ALS4(1)(2)152QD450
450	1500	NF	77 x 105	9.8	18.7	80	43	ALS4(1)(2)152NF450
450	2200	QH	90 x 98	12.5	22.5	58	32	ALS4(1)(2)222QH450
450	2200	NP	77 x 146	13.1	22.9	54	29	ALS4(1)(2)222NP450
450	3300	NP	77 x 146	14.6	22.0	38	27	ALS4(1)(2)332NP450
450	3300	QP	90 x 146	14.2	28.9	37	20	ALS4(1)(2)332QP450
450	4700	NT	77 x 220	21.9	32.0	27	15	ALS4(1)(2)472NT450
450	6800	QT	90 x 220	23.5	39.2	19	15	ALS4(1)(2)682QT450
500	220	DA	36 x 52	2.1	4.3	1000	810	ALS4(1)(2)221DA500
500	220	DB	36 x 62	2.1	4.4	1000	808	ALS4(1)(2)221DB500
500	330	DE	36 x 82	2.6	5.5	670	540	ALS4(1)(2)331DE500
500	470	DF	36 x 105	3.2	6.4	470	380	ALS4(1)(2)471DF500
500	680	KE	51 x 82	4.7	8.8	338	270	ALS4(1)(2)681KE500
500	1000	KF	51 x 105	5.7	10.6	230	187	ALS4(1)(2)102KF500
500	1500	ND	77 x 75	8.0	13.2	160	130	ALS4(1)(2)152ND500
500	2200	NF	77 x 105	10.2	17.1	110	90	ALS4(1)(2)222NF500
500	3300	NP	77 x 146	13.1	20.2	82	68	ALS4(1)(2)332NP500
500	4700	NT	77 x 220	15.3	22.9	60	48	ALS4(1)(2)472NT500
VDC	Rated Capacitance	Size Code	Case Size	Ripple Current		ESR	Impedance	Part Number

(1) Mounting Code: 0 = plain can, 1 = threaded mounting stud
(2) Termination Code: See Termination Tables for available options

Table 1 – Ratings & Part Number Reference cont'd

VDC	Rated Capacitance	Size Code	Case Size	Ripple Current		ESR Maximum	Impedance Maximum	Part Number
	100 Hz 20°C (µF)		D x L (mm)	100 Hz 105°C (A)	10 kHz 105°C (A)	100 Hz 20°C (mΩ)	10 kHz 20°C (mΩ)	
500	1500	QC	90 x 67	8.4	14.0	160	130	ALS4(1)(2)152QC500
500	2200	QD	90 x 75	10.2	16.3	112	90	ALS4(1)(2)222QD500
500	3300	QH	90 x 98	13.1	20.3	75	60	ALS4(1)(2)332QH500
500	3300	QP	90 x 146	14.1	23.4	80	66	ALS4(1)(2)332QP500
500	6800	QT	90 x 220	20.0	29.3	41	34	ALS4(1)(2)682QT500
VDC	**Rated Capacitance**	**Size Code**	**Case Size**	**Ripple Current**		**ESR**	**Impedance**	**Part Number**

(1) Mounting Code: 0 = plain can, 1 = threaded mounting stud
(2) Termination Code: See Termination Tables for available options

Mechanical Data

Polarity and Reversed Voltage

Aluminium Electrolytic capacitors manufactured for use in DC applications contain an anode foil and a cathode foil. As such, they are polarized devices and must be connected with the +ve to the anode foil and the -ve to the cathode foil. If this were to be reversed then the electrolytic process that took place in forming the oxide layer on the anode would be recreated in trying to form an oxide layer on the cathode. In forming the cathode foil in this way, heat would be generated and gas given off within the capacitor, usually leading to catastrophic failure.

The cathode foil already possesses a thin stabilized oxide layer. This thin oxide layer is equivalent to a forming voltage of approximately 2 V. As a result, the capacitor can withstand a voltage reversal of up to 2 V for short periods. Above this voltage, the formation process will commence. Aluminium Electrolytic capacitors can also be manufactured for use in intermittent AC applications by using two anode foils in place of one anode and one cathode.

Mounting Position

The capacitor can be mounted in any position as long as the safety vent can operate. It is possible for some electrolyte to be expelled. As this is a conducting liquid, suitable precautions should be initiated by the system designer to avoid secondary short circuits.
The capacitors are designed to be mounted in free air and are not suitable for submersion in liquid.

Insulating Resistance

≥ 100 MΩ at 100 VDC across insulating sleeve. UL recognized sleeving is available for custom parts in this range, upon request.
(UL No. E358957)

Voltage Proof

≥ 2,500 VDC across insulating sleeve

Safety Vent

A safety vent for overpressure is featured on terminal deck. This is in the form of a rubber plug designed to relieve build-up of internal pressure due to overstress or catastrophic failure.

Marking

Construction

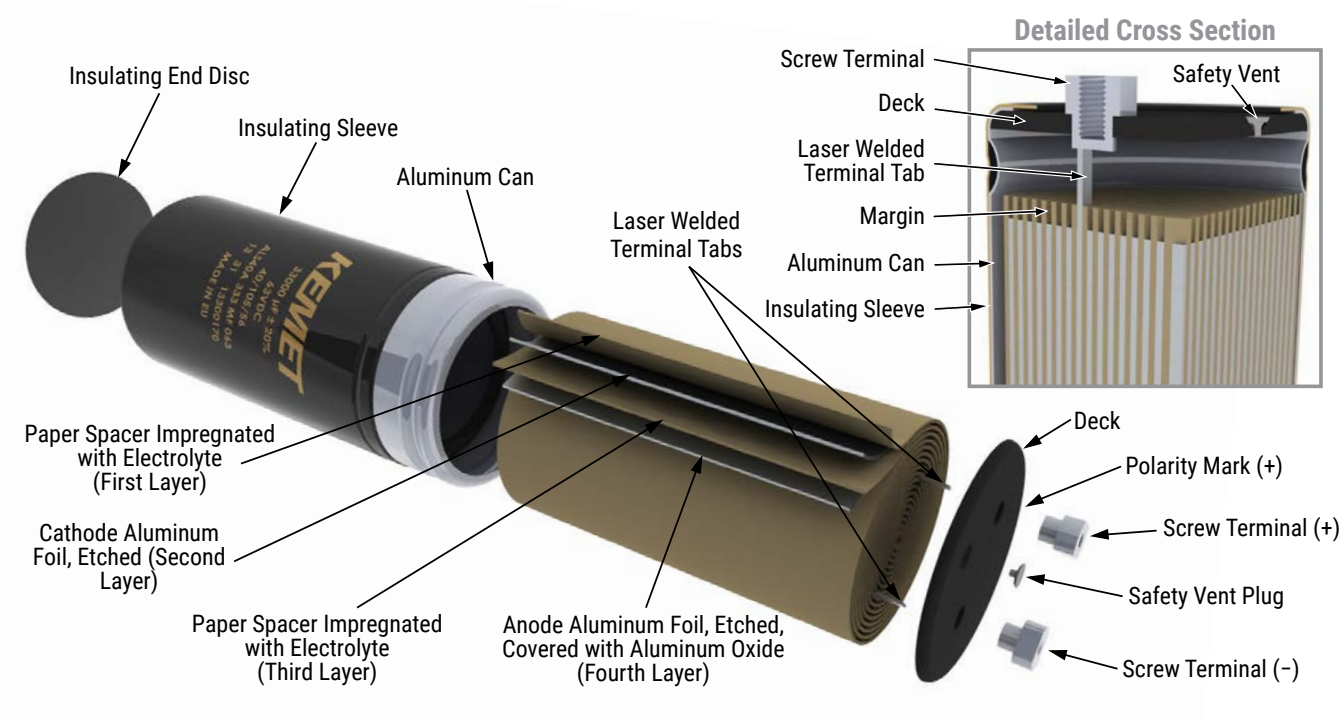

Construction Data

The manufacturing process begins with the anode foil being electrochemically etched to increase the surface area and then "formed" to produce the aluminum oxide layer. Both the anode and cathode foils are then interleaved with absorbent paper and wound into a cylinder. During the winding process, aluminum tabs are attached to each foil to provide the electrical contact.

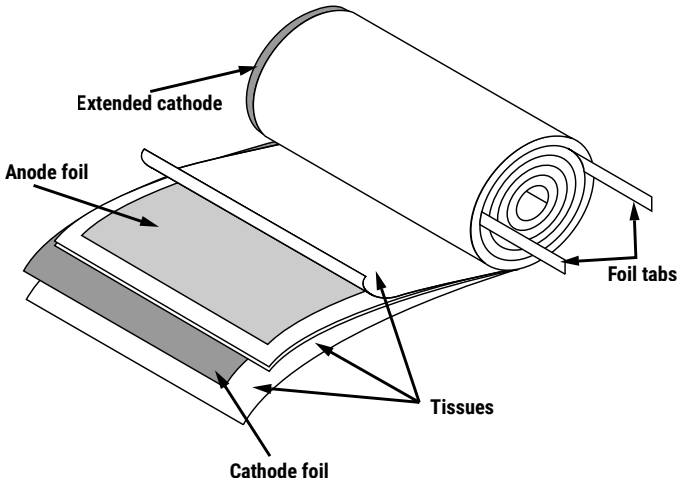

The deck, complete with terminals, is attached to the tabs and then folded down to rest on top of the winding. The complete winding is impregnated with electrolyte before being housed in a suitable container, usually an aluminum can, and sealed. Throughout the process, all materials inside the housing must be maintained at the highest purity and be compatible with the electrolyte.

Each capacitor is aged and tested before being sleeved and packed. The purpose of aging is to repair any damage in the oxide layer and thus reduce the leakage current to a very low level. Aging is normally carried out at the rated temperature of the capacitor and is accomplished by applying voltage to the device while carefully controlling the supply current. The process may take several hours to complete.

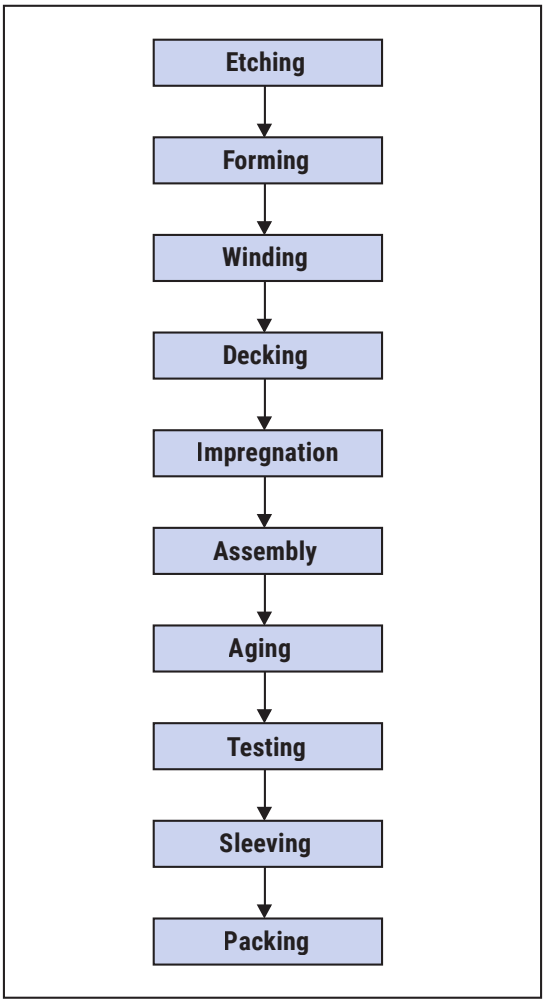

Damage to the oxide layer can occur due to variety of reasons:
- Slitting of the anode foil after forming
- Attaching the tabs to the anode foil
- Minor mechanical damage caused during winding

A sample from each batch is taken by the quality department after completion of the production process. This sample size is controlled by the use of recognized sampling tables defined in BS 6001.

The following tests are applied and may be varied at the request of the customer. In this case the batch, or special procedure, will determine the course of action.

Electrical:
- Leakage current
- Capacitance
- ESR
- Impedance
- Tan Delta

Mechanical/Visual:
- Overall dimensions
- Torque test of mounting stud
- Print detail
- Box labels
- Packaging, including packed quantity

KEMET Electronic Corporation Sales Offices

For a complete list of our global sales offices, please visit www.kemet.com/sales.

Disclaimer

All product specifications, statements, information and data (collectively, the "Information") in this datasheet are subject to change. The customer is responsible for checking and verifying the extent to which the Information contained in this publication is applicable to an order at the time the order is placed.

All Information given herein is believed to be accurate and reliable, but it is presented without guarantee, warranty, or responsibility of any kind, expressed or implied.

Statements of suitability for certain applications are based on KEMET Electronics Corporation's ("KEMET") knowledge of typical operating conditions for such applications, but are not intended to constitute – and KEMET specifically disclaims – any warranty concerning suitability for a specific customer application or use. The Information is intended for use only by customers who have the requisite experience and capability to determine the correct products for their application. Any technical advice inferred from this Information or otherwise provided by KEMET with reference to the use of KEMET's products is given gratis, and KEMET assumes no obligation or liability for the advice given or results obtained.

Although KEMET designs and manufactures its products to the most stringent quality and safety standards, given the current state of the art, isolated component failures may still occur. Accordingly, customer applications which require a high degree of reliability or safety should employ suitable designs or other safeguards (such as installation of protective circuitry or redundancies) in order to ensure that the failure of an electrical component does not result in a risk of personal injury or property damage.

Although all product–related warnings, cautions and notes must be observed, the customer should not assume that all safety measures are indicted or that other measures may not be required.

KEMET is a registered trademark of KEMET Electronics Corporation.