RAYSTAR

RAYSTAR Optronics, Inc.
曜凌光電股份有限公司

曜凌光電股份有限公司
Raystar Optronics, Inc.
42881台中市大雅區科雅路25號5樓
5F, No. 25, Keya Road, Daya Dist., Taichung City 42881, Taiwan
T：+886-4-2565-0761 | F：+886-4-2565-0760
sales@raystar-optronics.com | www.raystar-optronics.com

RFS52VA-1ZH-DHN

SPECIFICATION

CUSTOMER:

APPROVED BY	
PCB VERSION	
DATE	

FOR CUSTOMER USE ONLY

SALES BY	APPROVED BY	CHECKED BY	PREPARED BY

Release DATE:

TFT Display Inspection Specification: https://www.raystar-optronics.com/download/products.htm
Precaution in use of TFT module: https://www.raystar-optronics.com/download/declaration.htm

Revision History

VERSION	DATE	REVISED PAGE NO.	Note
0 A	2019/06/27 2020/08/26		First issue Add the HDMI interface description →HDMI(only for DVI)

RAYSTAR OPTRONICS

Contents

1.Module Classification Information

2.Summary

3.General Specification

4.Interface

5.Contour Drawing

6.Absolute Maximum Ratings

7.Electrical Characteristics

8.DC Characteristics

9.Optical Characteristics

10.Reliability

11.Other

RAYSTAR OPTRONICS

1.Module Classification Information

R	F	S	52	VA	-	1	Z	H	-	D	H	N
1	2	3	4	5	-	6	7	8	-	9	10	11

Item	Description	
1	R：Raystar Optronics Inc.	
2	Display Type：F→TFT Type, J→ Custom TFT	
3	Solution: A: 128x160 B:320x234 C:320x240 D:480x234 E:480x272 F:800x480 G:640x480 H:1024x600 I:320x480 J:240x320 K:1280x800 L:240x400 M:1024x768 N:128x128 O:480x800 P:640x320 Q:800x600 S:480x128 T:800x320	
4	Display Size：5.2” TFT	
5	Version Code.	
6	Model Type: A：TFT LCD E：TFT+FR+CONTROL BOARD J：TFT+FR+A/D BOARD N：TFT+FR+A/D BOARD+CONTROL BOARD S：TFT+FR+POWER BOARD (DC TO DC) 1：TFT+CONTROL BOARD	6：TFT+FR H：TFT+D/V BOARD I：TFT+FR+D/V BOARD B：TFT+POWER BD
7	Polarizer Type, Temperature range, View direction	I→Transmissive, W. T, 6:00 ; C→Transmissive, N. T, 6:00 L→Transmissive, W.T,12:00 ; F→Transmissive, N.T,12:00 Y→Transmissive,W.T, IPS TFT ; A→Transmissive, N.T, IPS TFT Z→Transmissive, W.T, O-TFT R→Transmissive, Super W.T, O-TFT N→Transmissive, Super W.T, 6:00; Q→Transmissive, Super W.T, 12:00 V→Transmissive, Super W.T, VA TFT
8	Backlight	W：LED, White H：LED, High Light White F：CCFL, White
9	Driver Method	D: Digital A: Analog L：LVDS M:MIPI
10	Interface	N：without control board A：8Bit B：16Bit S:SPI Interface R: RS232 U:USB I: I2C
11	TS	N：Without TS S：resistive touch panel C：capacitive touch panel capacitive touch panel (G-F-F) G：capacitive touch panel(G-G)

RAYSTAR OPTRONICS

2.Summary

TFT 5.2” is a TN transmissive type color active matrix TFT liquid crystal display that use amorphous silicon TFT as switching devices. This module is a composed of a TFT_LCD module, It is usually designed for industrial application and this module follows RoHs,

RAYSTAR OPTRONICS

3.General Specifications

- Size: 5.2 inch
- Dot Matrix: 480 × 3(RGB) × 128 dots
- Module dimension: 180.0 x 75.8 x 22.0 (Max) mm
- Active area: 127.152 x 33.9072 mm
- Dot pitch: 0.0883 x 0.2649 mm
- LCD type: TFT, Normally White, Transmissive
- Aspect Ratio: Bar Type
- Backlight Type: LED, Normally White
- Controller IC: TFP401
- Interface: HDMI(only for DVI)
- With /Without TP: Without TP
- Surface: Anti-Glare

*Color tone slight changed by temperature and driving voltage.

RAYSTAR OPTRONICS

4.Interface

4.1. LCM PIN Definition(CON4)

Pin	Symbol	Function	Remark
1	NC	No connector	
2	5V	Raspberry Pi:Power 5V	
3	GPIO02	Raspberry Pi:GPIO02	
4	5V	Raspberry Pi:Power 5V	
5	GPIO03	Raspberry Pi:GPIO03	
6	GND	Raspberry Pi:GND	
7	GPIO04	Raspberry Pi:GPIO04	
8	GPIO14	Raspberry Pi:GPIO14	
9	GND	Raspberry Pi:GND	
10	GPIO15	Raspberry Pi:GPIO15	
11	GPIO17	Raspberry Pi:GPIO17	
12	GPIO18	Raspberry Pi:GPIO18 (Backlight Enable)	
13	GPIO27	Raspberry Pi:GPIO27	
14	GND	Raspberry Pi:GND	
15	GPIO22	Raspberry Pi:GPIO22	
16	GPIO23	Raspberry Pi:GPIO23	
17	NC	No connector	
18	GPIO24	Raspberry Pi:GPIO24	
19	GPIO10	Raspberry Pi:GPIO10	
20	GND	Raspberry Pi:GND	
21	GPIO09	Raspberry Pi:GPIO09	
22	GPIO25	Raspberry Pi:GPIO25	
23	GPIO11	Raspberry Pi:GPIO11	
24	GPIO08	Raspberry Pi:GPIO08	
25	GND	Raspberry Pi:GND	
26	GPIO07	Raspberry Pi:GPIO07	
27	ID_SD	Raspberry Pi:ID_SD	
28	ID_SC	Raspberry Pi:ID_SC	
29	GPIO05	Raspberry Pi:GPIO05	

RAYSTAR OPTRONICS

30	GND	Raspberry Pi:GND	
31	GPIO06	Raspberry Pi:GPIO06	
32	GPIO12	Raspberry Pi:GPIO12	
33	GPIO13	Raspberry Pi:GPIO13	
34	GND	Raspberry Pi:GND	
35	GPIO19	Raspberry Pi:GPIO19	
36	GPIO16	Raspberry Pi:GPIO16	
37	GPIO26	Raspberry Pi:GPIO26	
38	GPIO20	Raspberry Pi:GPIO20	
39	GND	Raspberry Pi:GND	
40	GPIO21	Raspberry Pi:GPIO21	

RAYSTAR OPTRONICS

4.2. LCM PIN Definition(CON5)

Pin	Symbol	Function	Remark
1	3.3V	TFT Module Power limit can only output 3.3V,100mA	Note1
2	5V	Raspberry Pi:Power 5V	
3	GPIO02	Raspberry Pi:GPIO02	
4	5V	Raspberry Pi:Power 5V	
5	GPIO03	Raspberry Pi:GPIO03	
6	GND	Raspberry Pi:GND	
7	GPIO04	Raspberry Pi:GPIO04	
8	GPIO14	Raspberry Pi:GPIO14	
9	GND	Raspberry Pi:GND	
10	GPIO15	Raspberry Pi:GPIO15	
11	GPIO17	Raspberry Pi:GPIO17	
12	GPIO18	Raspberry Pi:GPIO18 (Backlight Enable)	
13	GPIO27	Raspberry Pi:GPIO27	
14	GND	Raspberry Pi:GND	
15	GPIO22	Raspberry Pi:GPIO22	
16	GPIO23	Raspberry Pi:GPIO23	
17	3.3V	TFT Module Power limit can only output 3.3V,100mA	Note1
18	GPIO24	Raspberry Pi:GPIO24	
19	GPIO10	Raspberry Pi:GPIO10	
20	GND	Raspberry Pi:GND	
21	GPIO09	Raspberry Pi:GPIO09	
22	GPIO25	Raspberry Pi:GPIO25	
23	GPIO11	Raspberry Pi:GPIO11	
24	GPIO08	Raspberry Pi:GPIO08	
25	GND	Raspberry Pi:GND	
26	GPIO07	Raspberry Pi:GPIO07	
27	ID_SD	Raspberry Pi:ID_SD	
28	ID_SC	Raspberry Pi:ID_SC	
29	GPIO05	Raspberry Pi:GPIO05	
30	GND	Raspberry Pi:GND	

RAYSTAR OPTRONICS

31	GPIO06	Raspberry Pi:GPIO06	
32	GPIO12	Raspberry Pi:GPIO12	
33	GPIO13	Raspberry Pi:GPIO13	
34	GND	Raspberry Pi:GND	
35	GPIO19	Raspberry Pi:GPIO19	
36	GPIO16	Raspberry Pi:GPIO16	
37	GPIO26	Raspberry Pi:GPIO26	
38	GPIO20	Raspberry Pi:GPIO20	
39	GND	Raspberry Pi:GND	
40	GPIO21	Raspberry Pi:GPIO21	

Note1: The 3.3V supply current is limited; please pay special attention to use

4.3. HDMI

Pin No.	Symbol	I/O	Function	Remark
1	Rx2+	I	+LVDS Differential Data Input	
2	GND	P	Ground	
3	Rx2-	I	-LVDS Differential Data Input	
4	Rx1+	I	+LVDS Differential Data Input	
5	GND	P	Ground	
6	Rx1-	I	-LVDS Differential Data Input	
7	Rx0+	I	+LVDS Differential Data Input	
8	GND	P	Ground	
9	Rx0-	I	-LVDS Differential Data Input	
10	RxC+	I	+LVDS Differential Clock Input	
11	GND	P	Ground	
12	RxC-	I	-LVDS Differential Clock Input	
13-14	NC	-	No connection	
15	NC	-	No connection	Note1
16	NC	-	No connection	Note1
17	GND	P	Ground	
18	5V	P	Power Supply	
19	NC	-	No connection	

I: input, O: output, P: Power
Note 1: Only supports Raspberry Pi series

RAYSTAR OPTRONICS

4.4. POWER-JACK

Pin No.	Symbol	I/O	Function	Remark
1	5V	P	Power Supply	
2	GND	P	Ground	
3	NC	-	No connection	

RAYSTAR OPTRONICS

5.Contour Drawing

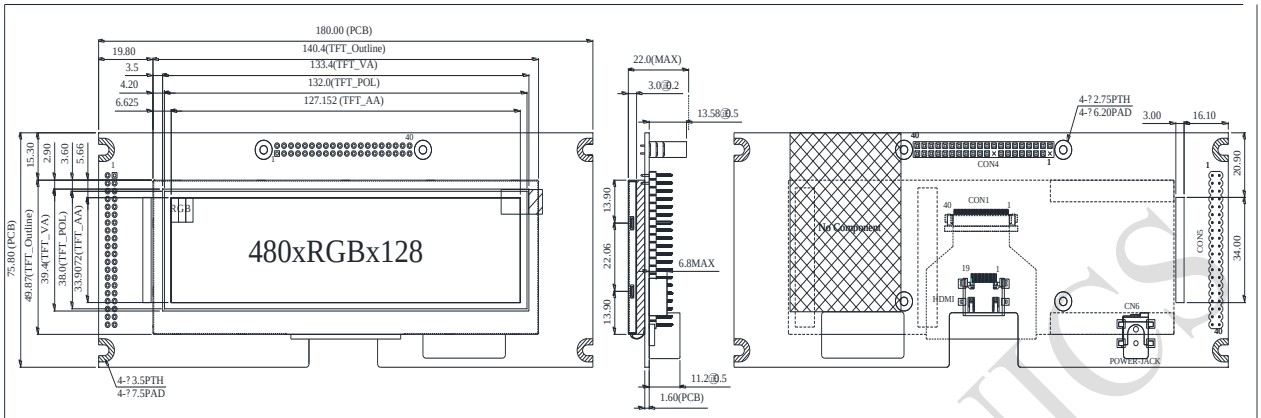

HDMI

Pin	Symbol
1	RX2+
2	GND
3	RX2-
4	RX1+
5	GND
6	RX1-
7	RX0+
8	GND
9	RX0-
10	RXC+
11	GND
12	RXC-
13	NC
14	NC
15	NC
16	NC
17	GND
18	5V
19	NC

CON4

Pin	Symbol	Pin	Symbol	Pin	Symbol	Pin	Symbol
1	NC	11	GPIO17	21	GPIO09	31	GPIO06
2	5V	12	BL_E (GPIO18)	22	GPIO25	32	GPIO12
3	GPIO02	13	GPIO27	23	GPIO11	33	GPIO13
4	5V	14	**GND**	24	GPIO08	34	GND
5	GPIO03	15	GPIO22	25	GND	35	GPIO19
6	GND	16	GPIO23	26	GPIO07	36	GPIO16
7	GPIO04	17	NC	27	ID_SD	37	GPIO26
8	GPIO14	18	GPIO24	28	ID_SC	38	GPIO20
9	GND	19	GPIO10	29	GPIO05	39	GND
10	GPIO15	20	GND	30	GND	40	GPIO21

CON5

Pin	Symbol	Pin	Symbol	Pin	Symbol	Pin	Symbol
1	3.3V	11	GPIO17	21	GPIO09	31	GPIO06
2	5V	12	BL_E (GPIO18)	22	GPIO25	32	GPIO12
3	GPIO02	13	GPIO27	23	GPIO11	33	GPIO13
4	5V	14	**GND**	24	GPIO08	34	GND
5	GPIO03	15	GPIO22	25	GND	35	GPIO19
6	GND	16	GPIO23	26	GPIO07	36	GPIO16
7	GPIO04	17	3.3V	27	ID_SD	37	GPIO26
8	GPIO14	18	GPIO24	28	ID_SC	38	GPIO20
9	GND	19	GPIO10	29	GPIO05	39	GND
10	GPIO15	20	GND	30	GND	40	GPIO21

POWER-JACK

Pin	Symbol
1	5V
2	GND
3	NC

2 (GND) — 1 (5V)

The non-specified tolerance of dimension is ±0.3 mm .

RAYSTAR OPTRONICS

6.Absolute Maximum Ratings

Item	Symbol	Min	Typ	Max	Unit
Operating Temperature	TOP	-20	—	+70	℃
Storage Temperature	TST	-30	—	+80	℃

Note: Device is subject to be damaged permanently if stresses beyond those absolute maximum ratings listed above

1. Temp. ≦60℃, 90% RH MAX. Temp.＞60℃, Absolute humidity shall be less than 90% RH at 60℃

RAYSTAR OPTRONICS

7.Electrical Characteristics

7.1. Operating conditions:

Item	Symbol	Condition	Min	Typ	Max	Unit	Remark
Supply Voltage For LCM	VDD	—	—	5	—	V	—
Supply Current For LCM	IDD	—	—	1200	1800	mA	Note 1
LED life time	—	—	—	50,000	—	Hr	Note 4

Note 1 : This value is test for VDD =5.0V , Ta=25℃ only

Note 2 : Display with Raspberry pi the driver power is over USB , first make sure you have a 2A power supply, with a good quality USB cable, a thin wire power cable is no good. Make sure its 24AWG or smaller, shorter USB cables are better too.

Note3 : CTP driver is base on the mouse driver program and through USB port connect to PC or embedded board.Can only support the single touch.

Note 4: The “LED life time” is defined as the module brightness decrease to 50% original brightness at Ta=25℃ and IL =80mA. The LED lifetime could be decreased if operating IL is lager than 80mA

RAYSTAR OPTRONICS

8.DC CHARATERISTICS

Parameter	Symbol	Rating			Unit	Condition
		Min	Typ	Max		
Low level input voltage	V_{IL}	0	-	0.3VDD	V	
High level input voltage	V_{IH}	0.7VDD	-	VDD	V	

RAYSTAR OPTRONICS

9.Optical Characteristics

Item		Symbol	Condition.	Min	Typ.	Max.	Unit	Remark
Response time		Tr	θ=0°、Φ=0°	-	10	20	.ms	Note 3,5
		Tf		-	15	30	.ms	
Contrast ratio		CR	At optimized viewing angle	400	500	-	-	Note 4,5
Color Chromaticity	White	Wx	θ=0°、Φ=0	0.26	0.31	0.36		Note 2,6,7
		Wy		0.28	0.33	0.38		
Viewing angle	Hor.	ΘR	CR≧10	-	75	-	Deg.	Note 1
		ΘL		-	75	-		
	Ver.	ΦT		-	75	-		
		ΦB		-	75	-		
Brightness		-	-	800	850	-	cd/m^2	Center of display
Uniformity		(U)	-	75	-	-	%	Note5

Ta=25±2℃

Note: After adding a polarized O-film, its viewing angle is enlarged, but its still have gray scale appearance.

Note 1: Definition of viewing angle range

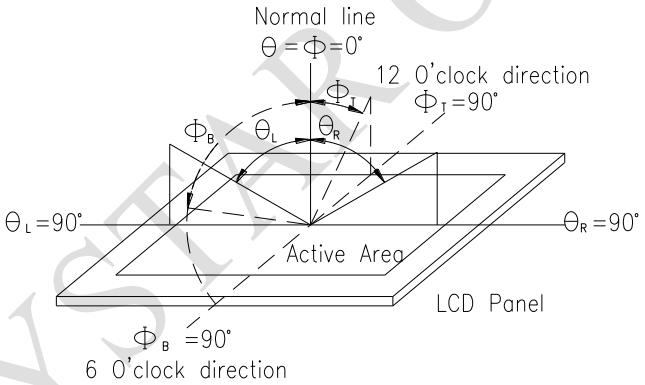

Fig. 9.1. Definition of viewing angle

Note 2: Test equipment setup:

After stabilizing and leaving the panel alone at a driven temperature for 10 minutes, the measurement should be executed. Measurement should be executed in a stable, windless, and dark room. Optical specifications are measured by Topcon BM-7or BM-5 luminance meter 1.0° field of view at a distance of 50cm and normal direction.

RAYSTAR OPTRONICS

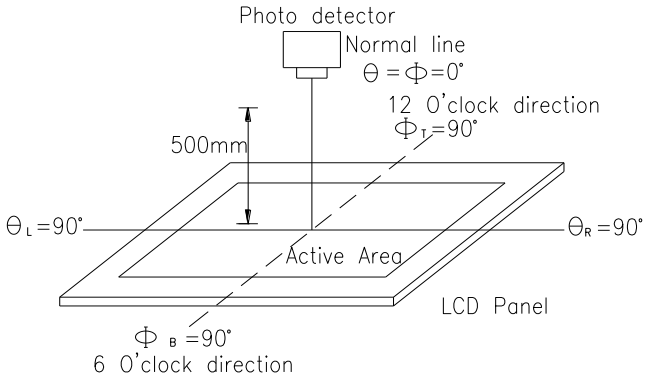

Fig. 9.2. Optical measurement system setup

Note 3: Definition of Response time:
The response time is defined as the LCD optical switching time interval between “White” state and “Black” state. Rise time, Tr, is the time between photo detector output intensity changed from 90%to 10%. And fall time, Tf, is the time between photo detector output intensity changed from 10%to 90%

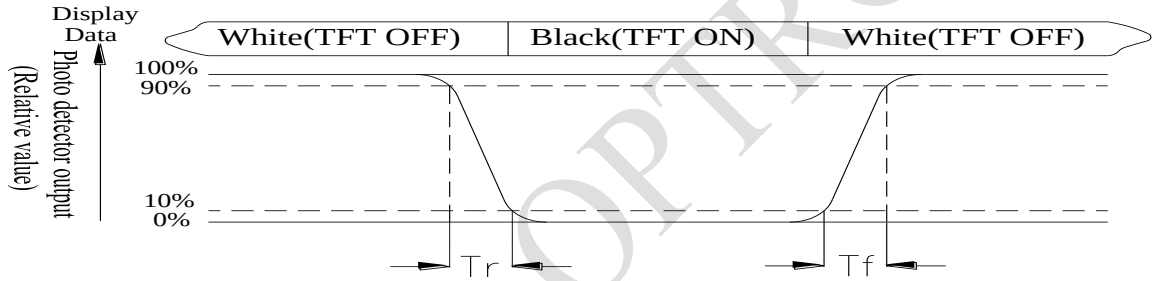

Note 4: Definition of contrast ratio:
The contrast ratio is defined as the following expression.

$$\text{Contrast ratio (CR)} = \frac{\text{Luminance measured when LCD on the "White" state}}{\text{Luminance measured when LCD on the "Black" state}}$$

RAYSTAR OPTRONICS

Note 5: Definition of Luminance Uniformity
Active area is divided into 9 measuring areas (reference the picture in below). Every measuring point is placed at the center of each measuring area.
Luminance Uniformity (U) = Lmin/Lmax x100%
L = Active area length
W = Active area width

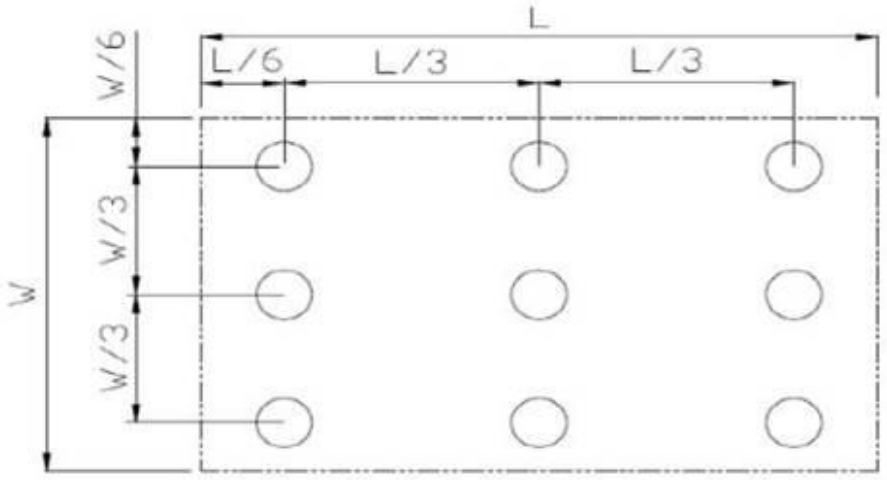

Fig9.3. . Definition of uniformity

Note 6: Definition of color chromaticity (CIE 1931)
Color coordinates measured at the center point of LCD

Note 7: Measured at the center area of the panel when all the input terminals of LCD panel are electrically opened.

RAYSTAR OPTICS

10.Reliability

Content of Reliability Test (Wide temperature, -20℃~70℃)

Environmental Test			
Test Item	**Content of Test**	**Test Condition**	**Note**
High Temperature storage	Endurance test applying the high storage temperature for a long time.	80℃ 200hrs	2
Low Temperature storage	Endurance test applying the low storage temperature for a long time.	-30℃ 200hrs	1,2
High Temperature Operation	Endurance test applying the electric stress (Voltage & Current) and the thermal stress to the element for a long time.	70℃ 200hrs	——
Low Temperature Operation	Endurance test applying the electric stress under low temperature for a long time.	-20℃ 200hrs	1
High Temperature/ Humidity Operation	The module should be allowed to stand at 60℃,90%RH max	60℃,90%RH 96hrs	1,2
Thermal shock resistance	The sample should be allowed stand the following 10 cycles of operation -20℃ 25℃ 70℃ 30min 5min 30min 1 cycle	-20℃/70℃ 10 cycles	——
Vibration test	Endurance test applying the vibration during transportation and using.	Total fixed amplitude : 1.5mm Vibration Frequency : 10~55Hz One cycle 60 seconds to 3 directions of X,Y,Z for Each 15 minutes	3
Static electricity test	Endurance test applying the electric stress to the terminal.	VS=±600V(contact) ,±800v(air), RS=330Ω CS=150pF 10 times	——

Note1: No dew condensation to be observed.

Note2: The function test shall be conducted after 4 hours storage at the normal Temperature and humidity after remove from the test chamber.

Note3: The packing have to including into the vibration testing.

RAYSTAR OPTRONICS

Page: 1

LCM Sample Estimate Feedback Sheet		
Module Number：_____		
1、Panel Specification：		
1. Panel Type：	□ Pass	□ NG ,_____
2. View Direction：	□ Pass	□ NG ,_____
3. Numbers of Dots：	□ Pass	□ NG ,_____
4. View Area：	□ Pass	□ NG ,_____
5. Active Area：	□ Pass	□ NG ,_____
6.Operating Temperature：	□ Pass	□ NG ,_____
7.Storage Temperature：	□ Pass	□ NG ,_____
8.Others：_____		
2、Mechanical Specification：		
1. PCB Size：	□ Pass	□ NG ,_____
2.Frame Size：	□ Pass	□ NG ,_____
3.Materal of Frame：	□ Pass	□ NG ,_____
4.Connector Position：	□ Pass	□ NG ,_____
5.Fix Hole Position：	□ Pass	□ NG ,_____
6.Backlight Position：	□ Pass	□ NG ,_____
7. Thickness of PCB：	□ Pass	□ NG ,_____
8. Height of Frame to PCB：	□ Pass	□ NG ,_____
9.Height of Module：	□ Pass	□ NG ,_____
10.Others：	□ Pass	□ NG ,_____
3、Relative Hole Size：		
1.Pitch of Connector：	□ Pass	□ NG ,_____
2.Hole size of Connector：	□ Pass	□ NG ,_____
3.Mounting Hole size：	□ Pass	□ NG ,_____
4.Mounting Hole Type：	□ Pass	□ NG ,_____
5.Others：	□ Pass	□ NG ,_____
4、Backlight Specification：		
1.B/L Type：	□ Pass	□ NG ,_____
2.B/L Color：	□ Pass	□ NG ,_____
3.B/L Driving Voltage (Reference for LED Type)：□ Pass □ NG ,_____		
4.B/L Driving Current：	□ Pass	□ NG ,_____
5.Brightness of B/L：	□ Pass	□ NG ,_____
6.B/L Solder Method：	□ Pass	□ NG ,_____
7.Others：	□ Pass	□ NG ,_____

>> **Go to page 2** <<

RAYSTAR OPTRONICS

Module Number：_____

5、Electronic Characteristics of Module：

1.Input Voltage：	□ Pass	□ NG ,_____
2.Supply Current：	□ Pass	□ NG ,_____
3.Driving Voltage for LCD：	□ Pass	□ NG ,_____
4.Contrast for LCD：	□ Pass	□ NG ,_____
5.B/L Driving Method：	□ Pass	□ NG ,_____
6.Negative Voltage Output：	□ Pass	□ NG ,_____
7.Interface Function：	□ Pass	□ NG ,_____
8.LCD Uniformity：	□ Pass	□ NG ,_____
9.ESD test：	□ Pass	□ NG ,_____
10.Others：	□ Pass	□ NG ,_____

6、Summary：

Sales signature：_____

Customer Signature：_____ **Date**： / /

RAYSTAR OPTRONICS