Improved Quad CMOS Analog Switches

DESCRIPTION

The DG201B, DG202B analog switches are highly improved versions of the industry-standard DG201A, DG202. These devices are fabricated in Vishay Siliconix' proprietary silicon gate CMOS process, resulting in lower on-resistance, lower leakage, higher speed, and lower power consumption.

These quad single-pole single-throw switches are designed for a wide variety of applications in telecommunications, instrumentation, process control, computer peripherals, etc. An improved charge injection compensation design minimizes switching transients. The DG201B and DG202B can handle up to ± 22 V input signals, and have an improved continuous current rating of 30 mA. An epitaxial layer prevents latchup.

All devices feature true bi-directional performance in the on condition, and will block signals to the supply voltages in the off condition.

The DG201B is a normally closed switch and the DG202B is a normally open switch. (see Truth Table.)

FEATURES

- ± 22 V supply voltage rating
- TTL and CMOS compatible logic
- Low on-resistance - $R_{DS(on)}$: 45 Ω
- Low leakage - $I_{D(on)}$: 20 pA
- Single supply operation possible
- Extended temperature range
- Fast switching - t_{ON}: 120 ns
- Low glitching - Q: 1 pC
- **Compliant to RoHS Directive 2002/95/EC**

Pb-free Available

RoHS* COMPLIANT

BENEFITS

- Wide analog signal range
- Simple logic interface
- Higher accuracy
- Minimum transients
- Reduced power consumption
- Superior to DG201A, DG202
- Space savings (TSSOP)

APPLICATIONS

- Industrial instrumentation
- Test equipment
- Communications systems
- Disk drives
- Computer peripherals
- Portable instruments
- Sample-and-hold circuits

FUNCTIONAL BLOCK DIAGRAM AND PIN CONFIGURATION

DG201B
Dual-In-Line, SOIC and TSSOP

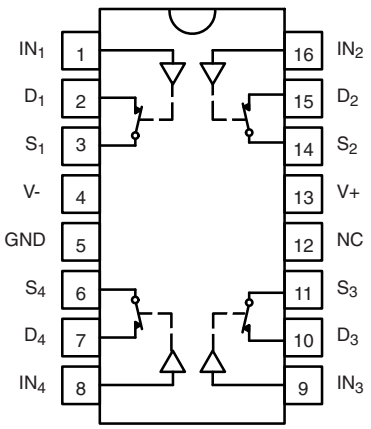

Top View

TRUTH TABLE		
Logic	**DG201B**	**DG202B**
0	ON	OFF
1	OFF	ON

Logic "0" ≤ 0.8 V
Logic "1" ≥ 2.4 V

* Pb containing terminations are not RoHS compliant, exemptions may apply

This document is subject to change without notice.
THE PRODUCTS DESCRIBED HEREIN AND THIS DOCUMENT ARE SUBJECT TO SPECIFIC DISCLAIMERS, SET FORTH AT www.vishay.com/doc?91000

sales@prom-elec.com / ООО ПРОМЭЛЕКТРОНИКА

ORDERING INFORMATION

Temp. Range	Package	Part Number
- 55 °C to 125 °C	16-pin CerDIP	DG201BAK
		DG202BAK
- 40 °C to 85 °C	16-pin Plastic DIP	DG201BDJ DG201BDJ-E3
		DG202BDJ DG202BDJ-E3
	16-pin narrow SOIC	DG201BDY DG201BDY-E3 DG201BDY-T1 DG201BDY-T1-E3
		DG202BDY DG202BDY-E3 DG202BDY-T1 DG202BDY-T1-E3
	16-pin TSSOP	DG201BDQ DG201BDQ-E3 DG201BDQ-T1 DG201BDQ-T1-E3
		DG202BDQ DG202BDQ-E3 DG202BDQ-T1 DG202BDQ-T1-E3

ABSOLUTE MAXIMUM RATINGS

Parameter		Limit	Unit
Voltages Referenced, V+ to V-		44	V
GND		25	
Digital Inputs[a], V_S, V_D		(V-) - 2 to (V+) + 2 or 30 mA, whichever occurs first	
Current (Any terminal)		30	mA
Peak Current S or D (Pulsed at 1 ms, 10 % duty cycle max.)		100	
Storage Temperature	(AK, DK suffix)	- 65 to 150	°C
	(DJ, DY, DQ suffix)	- 65 to 125	
Power Dissipation (Package)[b]	16-pin plastic DIP[c]	470	mW
	16-pin narrow SOIC and TSSOP[d]	640	
	16-pin CerDIP[e]	900	
	LCC-20[f]	750	

Notes:
a. Signals on S_X, D_X, or IN_X exceeding V+ or V- will be clamped by internal diodes. Limit forward diode current to maximum current ratings.
b. All leads welded or soldered to PC board.
c. Derate 6.5 mW/°C above 75 °C.
d. Derate 7.6 mW/°C above 75 °C.
e. Derate 12 mW/°C above 75 °C.
f. Derate 10 mW/°C above 75 °C.

This document is subject to change without notice.
THE PRODUCTS DESCRIBED HEREIN AND THIS DOCUMENT ARE SUBJECT TO SPECIFIC DISCLAIMERS, SET FORTH AT www.vishay.com/doc?91000

SCHEMATIC DIAGRAM (typical channel)

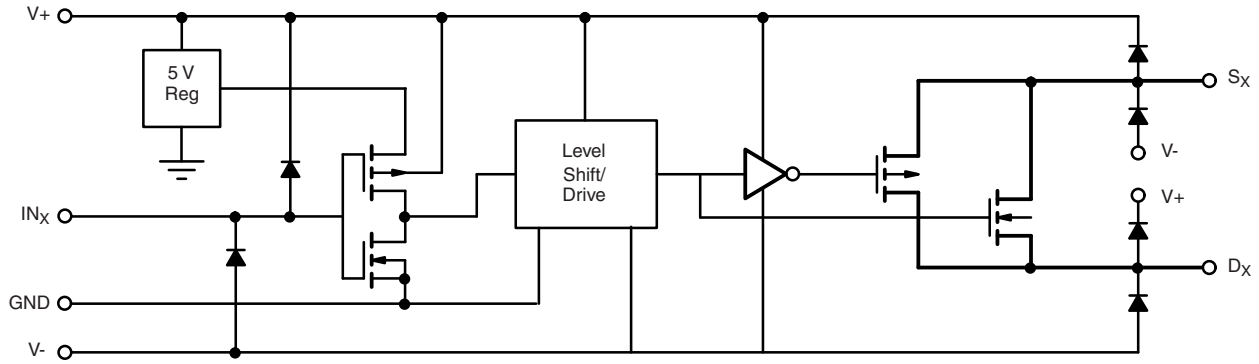

Figure 1.

SPECIFICATIONS[a]

Parameter	Symbol	Test Conditions Unless Specified V+ = 15 V, V- = - 15 V V_{IN} = 2.4 V, 0.8 V[f]	Temp.[b]	Typ.[c]	A Suffix - 55 °C to 125 °C Min.[d]	A Suffix Max.[d]	D Suffix - 40 °C to 85 °C Min.[d]	D Suffix Max.[d]	Unit
Analog Switch									
Analog Signal Range[e]	V_{ANALOG}		Full		- 15	15	- 15	15	V
Drain-Source On-Resistance	$R_{DS(on)}$	V_D = ± 10 V, I_S = 1 mA	Room Full	45		85 100		85 100	Ω
$R_{DS(on)}$ Match	$\Delta R_{DS(on}$		Room	2					
Source Off Leakage Current	$I_{S(off)}$	V_S = ± 14 V, V_D = ± 14 V	Room Full	± 0.01	- 0.5 - 20	0.5 20	- 0.5 - 5	0.5 5	nA
Drain Off Leakage Current	$I_{D(off)}$	V_D = ± 14 V, V_S = ± 14 V	Room Full	± 0.01	- 0.5 - 20	0.5 20	- 0.5 - 5	0.5 5	
Drain On Leakage Current	$I_{D(on)}$	V_S = V_D = ± 14 V	Room Full	± 0.02	- 0.5 - 40	0.5 40	- 0.5 - 10	0.5 10	
Digital Control									
Input Voltage High	V_{INH}		Full		2.4		2.4		V
Input Voltage Low	V_{INL}		Full			0.8		0.8	
Input Current	I_{INH} or I_{INL}	V_{INH} or V_{INL}	Full		- 1	1	- 1	1	µA
Input Capacitance	C_{IN}		Room	5					pF
Dynamic Characteristics									
Turn-On Time	t_{ON}	V_S = 2 V see switching time test circuit	Room Full	120		300		300	ns
Turn-Off Time	t_{OFF}		Room Full	65		200		200	
Charge Injection	Q	C_L = 1000 pF, V_g = 0 V R_g = 0 Ω	Room	1					pC
Source-Off Capacitance	$C_{S(off)}$	V_S = 0 V, f = 1 MHz	Room	5					pF
Drain-Off Capacitance	$C_{D(off)}$		Room	5					
Channel On Capacitance	$C_{D(on)}$	V_D = V_S = 0 V, f = 1 MHz	Room	16					
Off Isolation	OIRR	C_L = 15 pF, R_L = 50 Ω V_S = 1 V_{RMS}, f = 100 kHz	Room	90					dB
Channel-to-Channel Crosstalk	X_{TALK}		Room	95					
Power Supply									
Positive Supply Current	I+	V_{IN} = 0 or 5 V	Room Full			50 100		50 100	µA
Negative Supply Current	I-		Room Full		- 1 - 5		- 1 - 5		
Power Supply Range for Continuous Operation	V_{OP}		Full		± 4.5	± 22	± 4.5	± 22	V

This document is subject to change without notice.
THE PRODUCTS DESCRIBED HEREIN AND THIS DOCUMENT ARE SUBJECT TO SPECIFIC DISCLAIMERS, SET FORTH AT www.vishay.com/doc?91000

SPECIFICATIONS (for Single Supply)[a]									
		Test Conditions Unless Specified V+ = 12 V, V- = 0 V V_{IN} = 2.4 V, 0.8 V[f]			**A Suffix** - 55 °C to 125 °C		**D Suffix** - 40 °C to 85 °C		
Parameter	**Symbol**		**Temp.[b]**	**Typ.[c]**	**Min.[d]**	**Max.[d]**	**Min.[d]**	**Max.[d]**	**Unit**
Analog Switch									
Analog Signal Range[e]	V_{ANALOG}		Full		0	12	0	12	V
Drain-Source On-Resistance	$R_{DS(on)}$	V_D = 3 V, 8 V, I_S = 1 mA	Room Full	90		160 200		160 200	Ω
Dynamic Characteristics									
Turn-On Time	t_{ON}	V_S = 8 V see switching time test circuit	Room	120		300		300	ns
Turn-Off Time	t_{OFF}		Room	60		200		200	
Charge Injection	Q	C_L = 1 nF, V_{gen} = 6 V R_{gen} = 0 Ω	Room	4					pC
Power Supply									
Positive Supply Current	I+	V_{IN} = 0 or 5 V	Room Full			50 100		50 100	µA
Negative Supply Current	I-		Room Full		- 1 - 5		- 1 - 5		
Power Supply Range for Continuous Operation	V_{OP}		Full		+ 4.5	+ 25	+ 4.5	+ 25	V

Notes:
a. Refer to PROCESS OPTION FLOWCHART.
b. Room = 25 °C, Full = as determined by the operating temperature suffix.
c. Typical values are for DESIGN AID ONLY, not guaranteed nor subject to production testing.
d. The algebraic convention whereby the most negative value is a minimum and the most positive a maximum, is used in this data sheet.
e. Guaranteed by design, not subject to production test.
f. V_{IN} = input voltage to perform proper function.

Stresses beyond those listed under "Absolute Maximum Ratings" may cause permanent damage to the device. These are stress ratings only, and functional operation of the device at these or any other conditions beyond those indicated in the operational sections of the specifications is not implied. Exposure to absolute maximum rating conditions for extended periods may affect device reliability.

This document is subject to change without notice.
THE PRODUCTS DESCRIBED HEREIN AND THIS DOCUMENT ARE SUBJECT TO SPECIFIC DISCLAIMERS, SET FORTH AT www.vishay.com/doc?91000

TYPICAL CHARACTERISTICS (25 °C, unless otherwise noted)

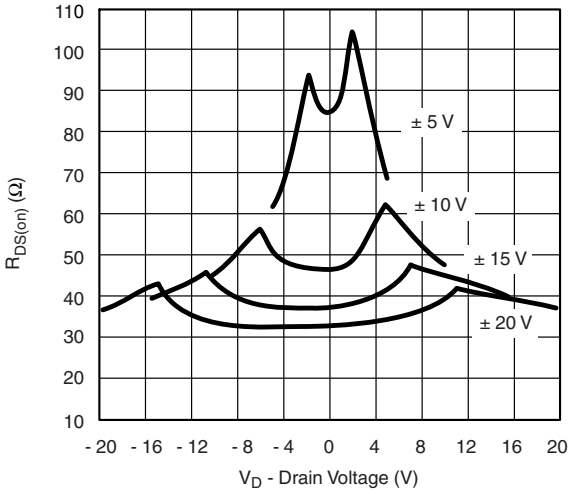

$R_{DS(on)}$ vs. V_D and Power Supply Voltages

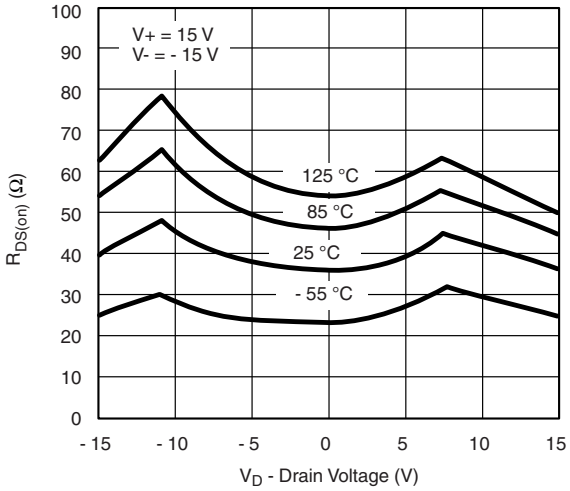

$R_{DS(on)}$ vs. V_D and Temperature

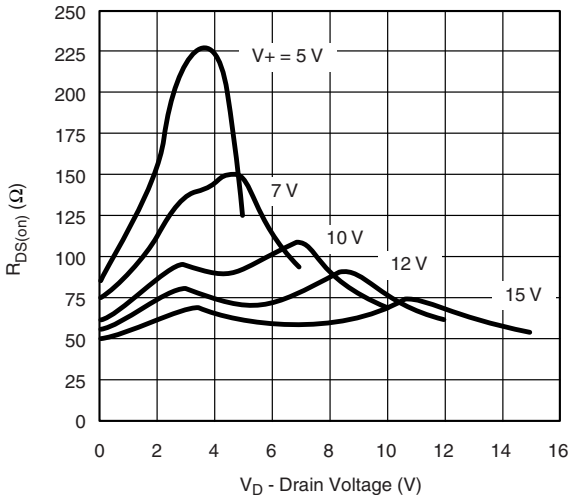

$R_{DS(on)}$ vs. V_D and Single Power Supply Voltages

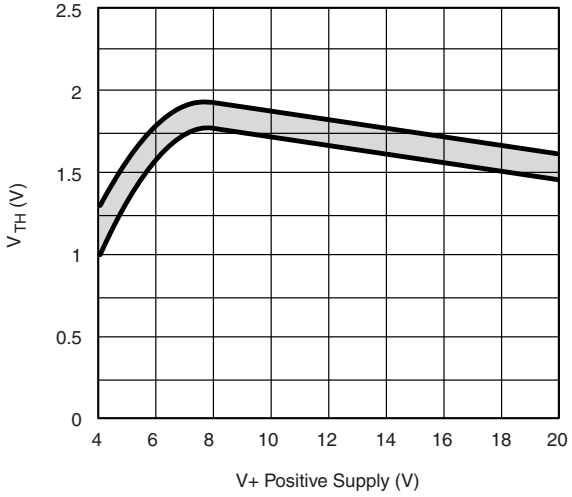

Input Switching Threshold vs. Supply Voltage

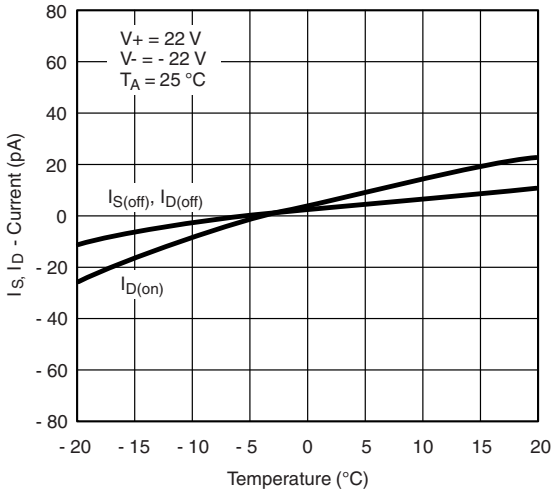

Leakage Currents vs. Analog Voltage

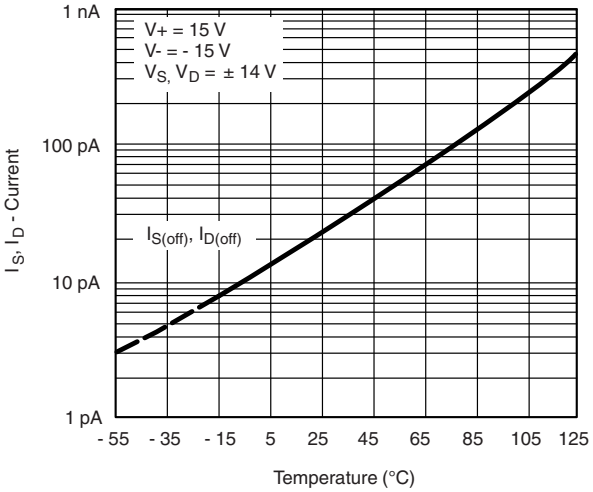

Leakage Currents vs. Temperature

This document is subject to change without notice.
THE PRODUCTS DESCRIBED HEREIN AND THIS DOCUMENT ARE SUBJECT TO SPECIFIC DISCLAIMERS, SET FORTH AT www.vishay.com/doc?91000

TYPICAL CHARACTERISTICS (25 °C, unless otherwise noted)

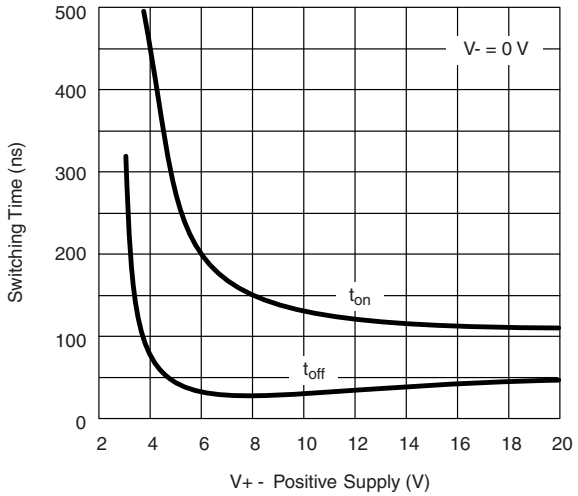

Switching Time vs. Single Supply Voltage

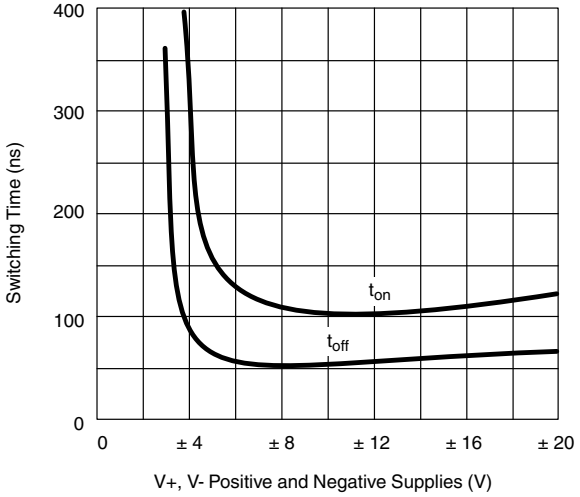

Switching Time vs. Power Supply Voltage

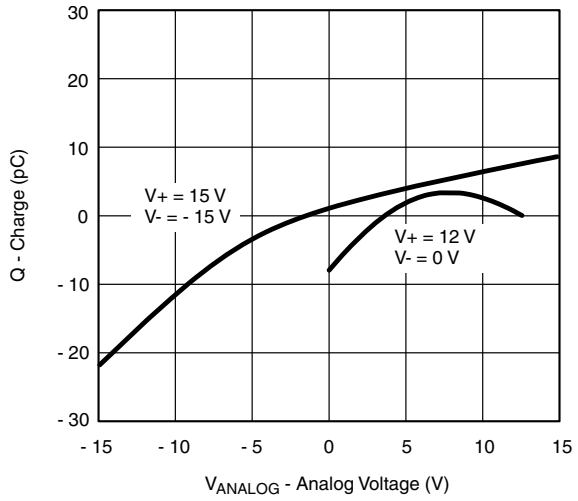

Q_S, Q_D - Charge Injection vs. Analog Voltage

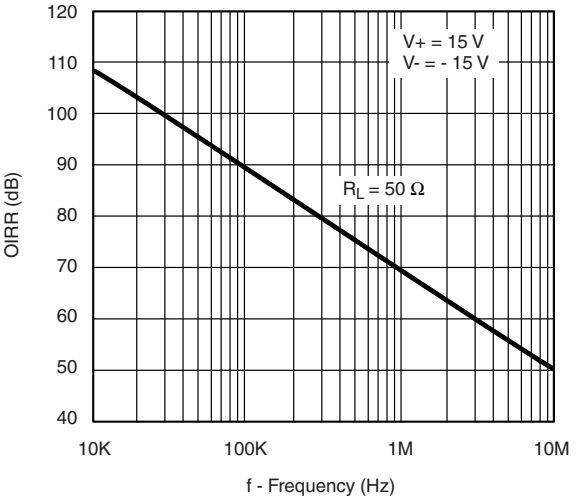

Off Isolation vs. Frequency

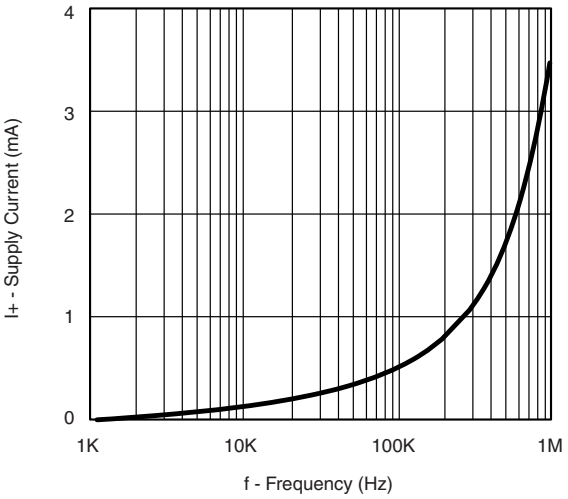

Supply Current vs. Switching Frequency

This document is subject to change without notice.
THE PRODUCTS DESCRIBED HEREIN AND THIS DOCUMENT ARE SUBJECT TO SPECIFIC DISCLAIMERS, SET FORTH AT www.vishay.com/doc?91000

TEST CIRCUITS

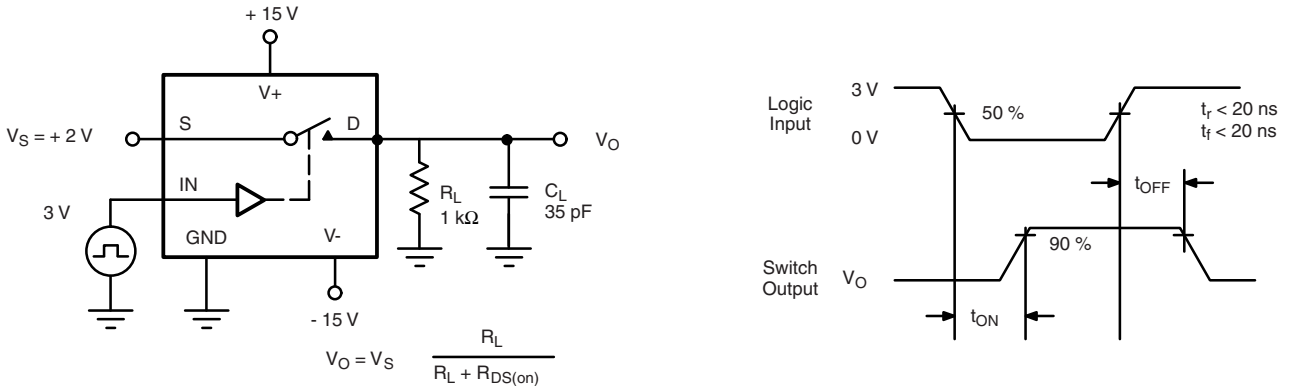

Figure 2. Switching Time

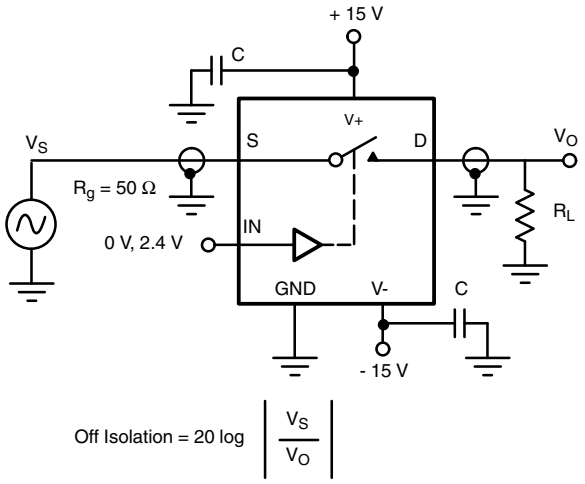

Figure 3. Off Isolation

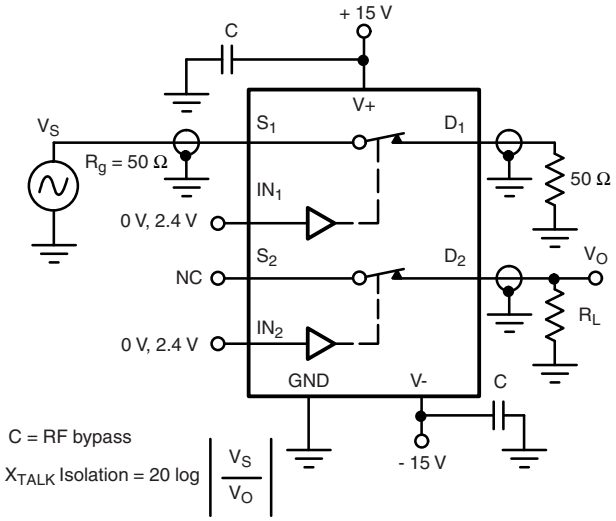

Figure 4. Channel-to-Channel Crosstalk

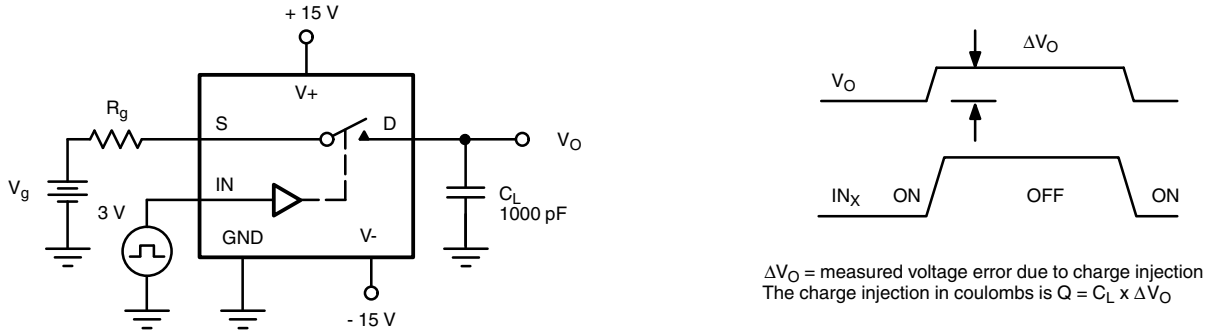

Figure 5. Charge Injection

This document is subject to change without notice.
THE PRODUCTS DESCRIBED HEREIN AND THIS DOCUMENT ARE SUBJECT TO SPECIFIC DISCLAIMERS, SET FORTH AT www.vishay.com/doc?91000

APPLICATIONS

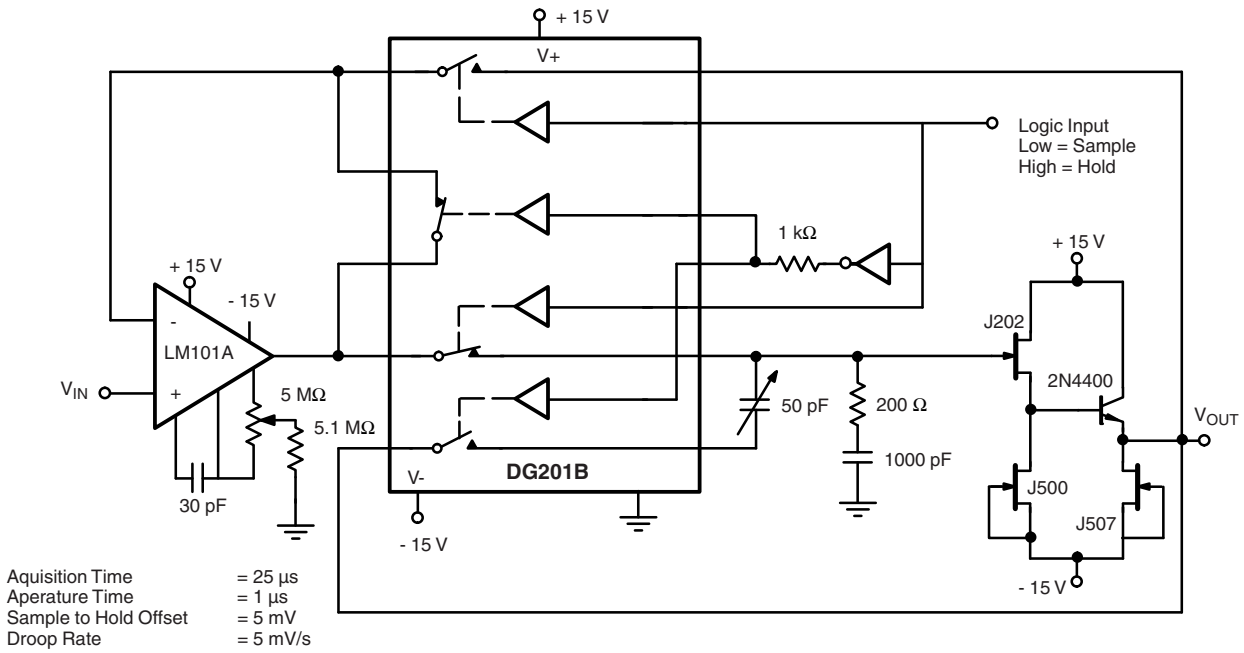

Figure 6. Sample-and-Hold

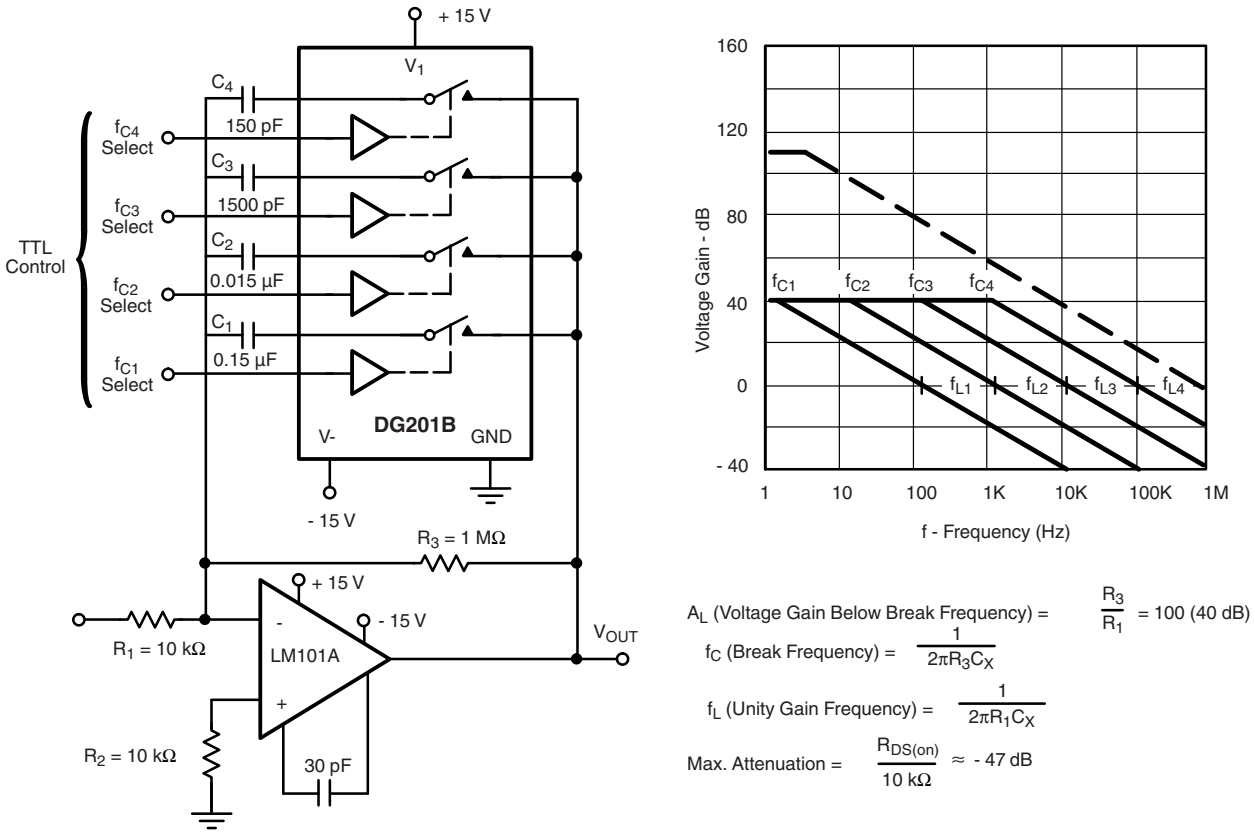

Figure 7. Active Low Pass Filter with Digitally Selected Break Frequency

This document is subject to change without notice.
THE PRODUCTS DESCRIBED HEREIN AND THIS DOCUMENT ARE SUBJECT TO SPECIFIC DISCLAIMERS, SET FORTH AT www.vishay.com/doc?91000

APPLICATIONS

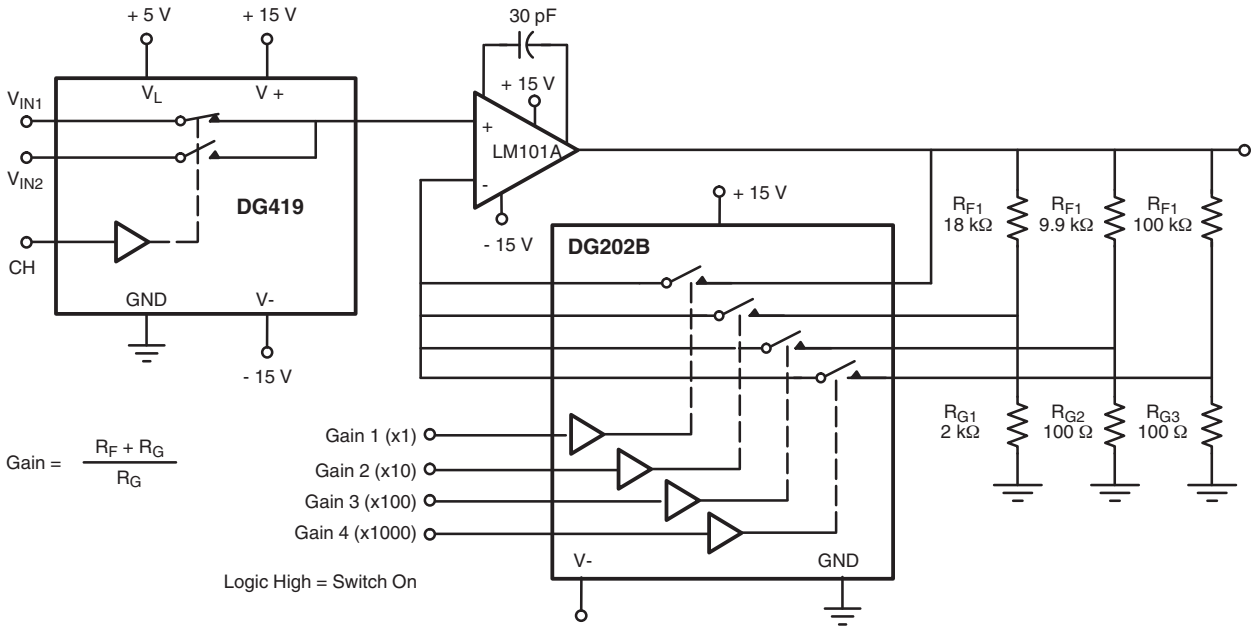

Figure 8. A Precision Amplifier with Digitally Programable Input and Gains

Vishay Siliconix maintains worldwide manufacturing capability. Products may be manufactured at one of several qualified locations. Reliability data for Silicon Technology and Package Reliability represent a composite of all qualified locations. For related documents such as package/tape drawings, part marking, and reliability data, see www.vishay.com/ppg?70037.

This document is subject to change without notice.
THE PRODUCTS DESCRIBED HEREIN AND THIS DOCUMENT ARE SUBJECT TO SPECIFIC DISCLAIMERS, SET FORTH AT www.vishay.com/doc?91000

SOIC (NARROW): 16-LEAD

JEDEC Part Number: MS-012

Dim	MILLIMETERS		INCHES	
	Min	Max	Min	Max
A	1.35	1.75	0.053	0.069
A_1	0.10	0.20	0.004	0.008
B	0.38	0.51	0.015	0.020
C	0.18	0.23	0.007	0.009
D	9.80	10.00	0.385	0.393
E	3.80	4.00	0.149	0.157
e	1.27 BSC		0.050 BSC	
H	5.80	6.20	0.228	0.244
L	0.50	0.93	0.020	0.037
⊘	0°	8°	0°	8°

ECN: S-03946—Rev. F, 09-Jul-01
DWG: 5300

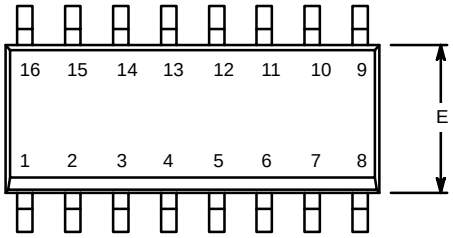

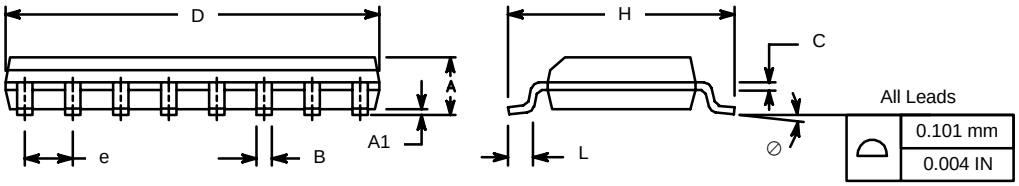

PDIP: 16-LEAD

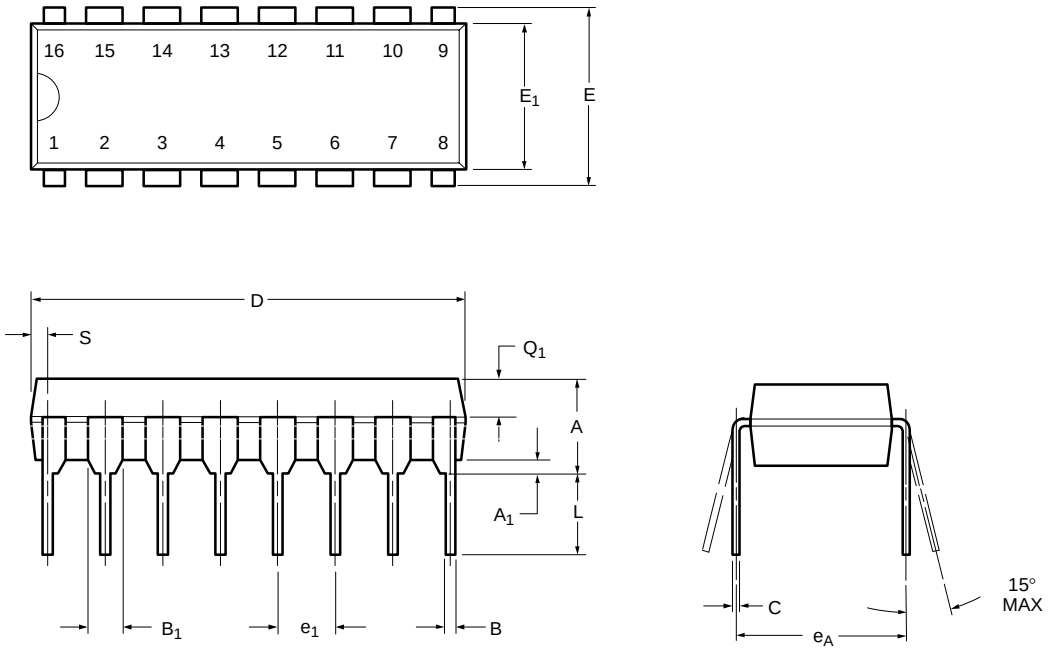

Dim	MILLIMETERS		INCHES	
	Min	Max	Min	Max
A	3.81	5.08	0.150	0.200
A_1	0.38	1.27	0.015	0.050
B	0.38	0.51	0.015	0.020
B_1	0.89	1.65	0.035	0.065
C	0.20	0.30	0.008	0.012
D	18.93	21.33	0.745	0.840
E	7.62	8.26	0.300	0.325
E_1	5.59	7.11	0.220	0.280
e_1	2.29	2.79	0.090	0.110
e_A	7.37	7.87	0.290	0.310
L	2.79	3.81	0.110	0.150
Q_1	1.27	2.03	0.050	0.080
S	0.38	1.52	.015	0.060
ECN: S-03946—Rev. D, 09-Jul-01 DWG: 5482				

CERDIP: 16-LEAD

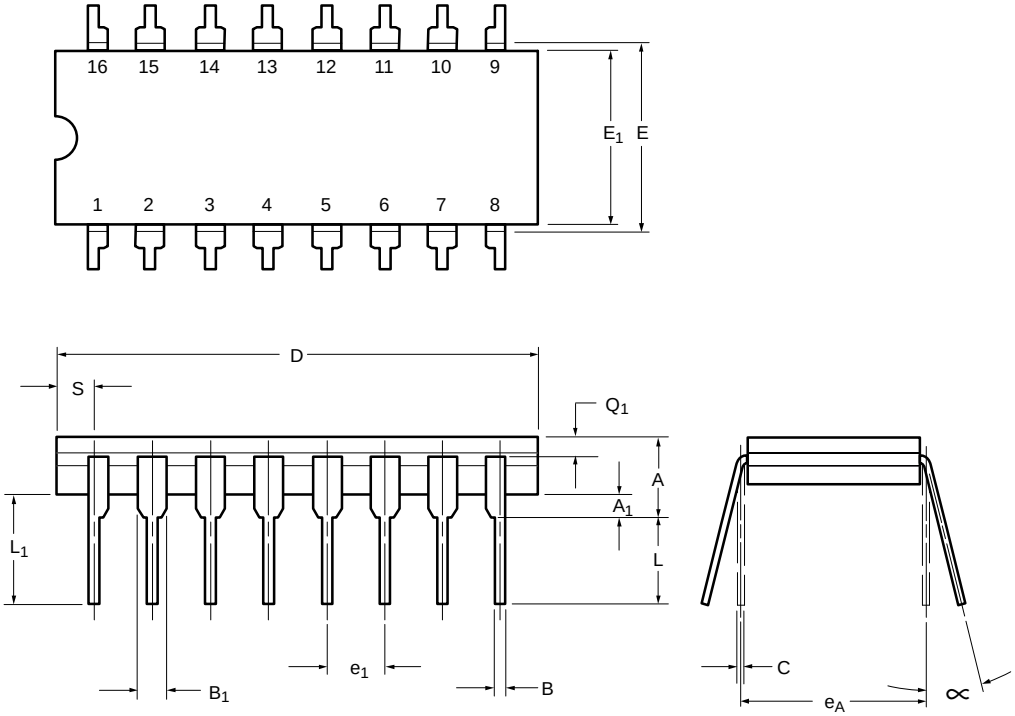

Dim	MILLIMETERS		INCHES	
	Min	Max	Min	Max
A	4.06	5.08	0.160	0.200
A_1	0.51	1.14	0.020	0.045
B	0.38	0.51	0.015	0.020
B_1	1.14	1.65	0.045	0.065
C	0.20	0.30	0.008	0.012
D	19.05	19.56	0.750	0.770
E	7.62	8.26	0.300	0.325
E_1	6.60	7.62	0.260	0.300
e_1	2.54 BSC		0.100 BSC	
e_A	7.62 BSC		0.300 BSC	
L	3.18	3.81	0.125	0.150
L_1	3.81	5.08	0.150	0.200
Q_1	1.27	2.16	0.050	0.085
S	0.38	1.14	0.015	0.045
∝	0°	15°	0°	15°
ECN: S-03946—Rev. G, 09-Jul-01 DWG: 5403				

TSSOP: 16-LEAD

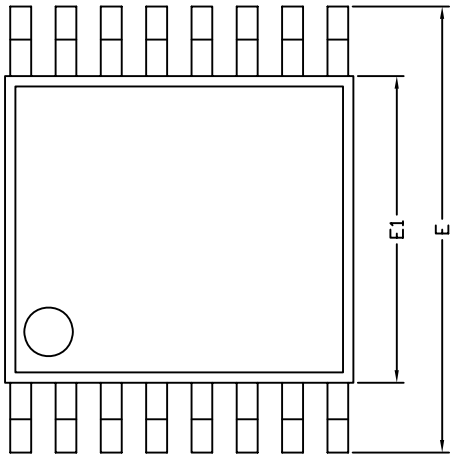

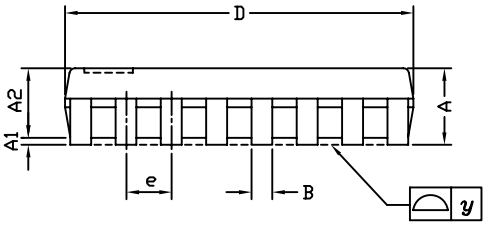

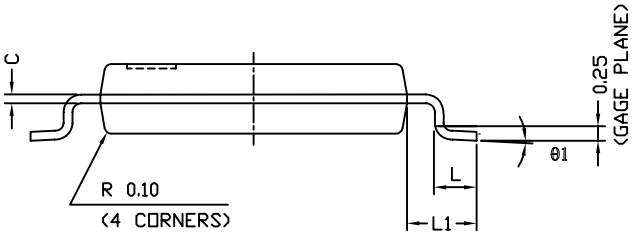

Symbols	DIMENSIONS IN MILLIMETERS		
	Min	Nom	Max
A	-	1.10	1.20
A1	0.05	0.10	0.15
A2	-	1.00	1.05
B	0.22	0.28	0.38
C	-	0.127	-
D	4.90	5.00	5.10
E	6.10	6.40	6.70
E1	4.30	4.40	4.50
e	-	0.65	-
L	0.50	0.60	0.70
L1	0.90	1.00	1.10
y	-	-	0.10
θ1	0°	3°	6°
ECN: S-61920-Rev. D, 23-Oct-06 DWG: 5624			

RECOMMENDED MINIMUM PAD FOR TSSOP-16

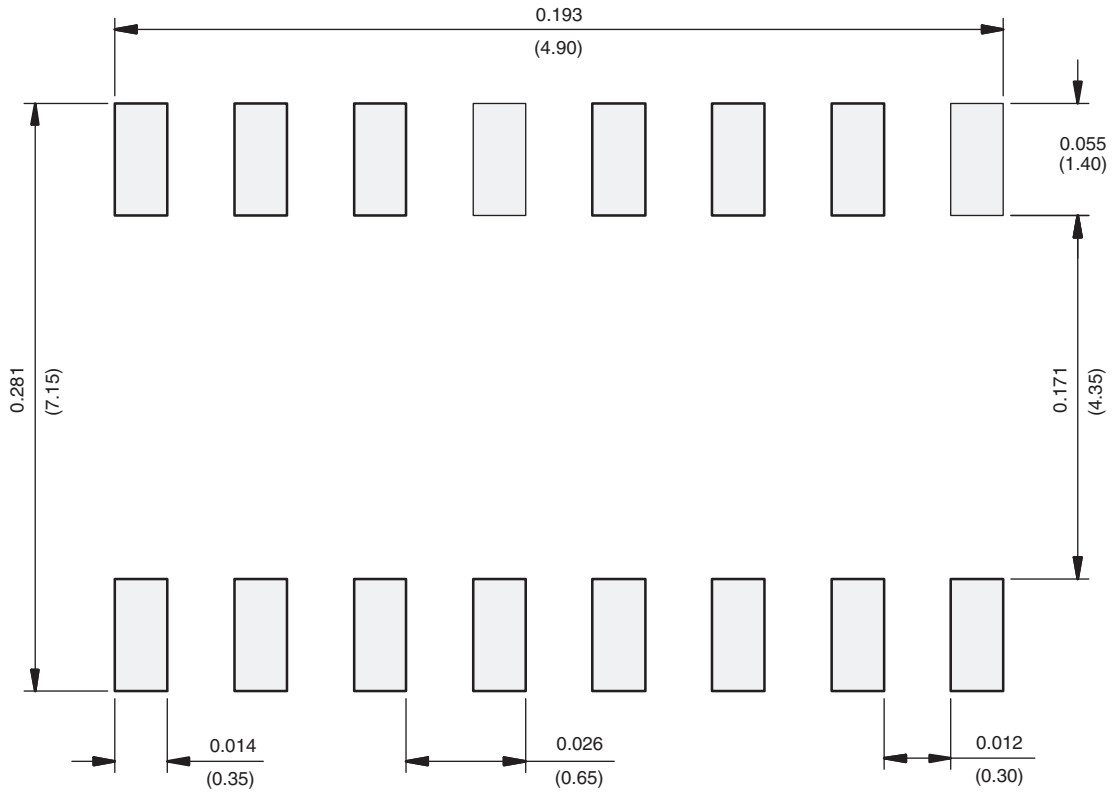

Recommended Minimum Pads
Dimensions in inches (mm)

THIS DOCUMENT IS SUBJECT TO CHANGE WITHOUT NOTICE. THE PRODUCTS DESCRIBED HEREIN AND THIS DOCUMENT ARE SUBJECT TO SPECIFIC DISCLAIMERS, SET FORTH AT www.vishay.com/doc?91000

RECOMMENDED MINIMUM PADS FOR SO-16

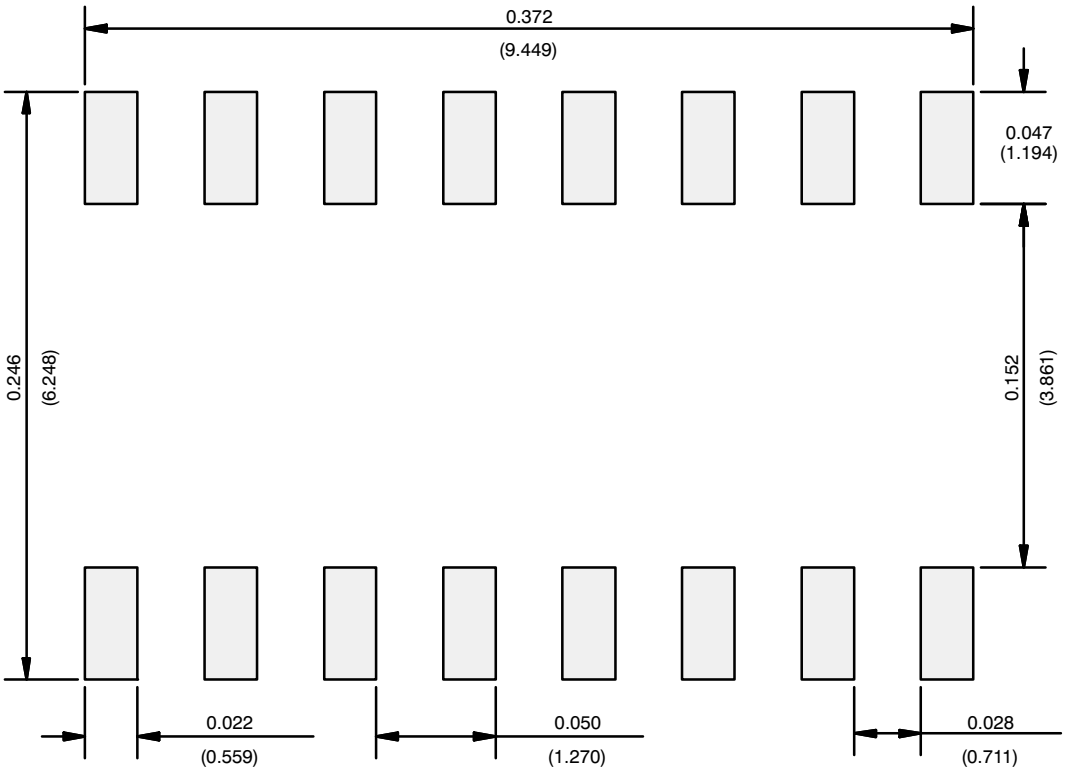

Recommended Minimum Pads
Dimensions in Inches/(mm)

Return to Index

Disclaimer

ALL PRODUCT, PRODUCT SPECIFICATIONS AND DATA ARE SUBJECT TO CHANGE WITHOUT NOTICE TO IMPROVE RELIABILITY, FUNCTION OR DESIGN OR OTHERWISE.

Vishay Intertechnology, Inc., its affiliates, agents, and employees, and all persons acting on its or their behalf (collectively, "Vishay"), disclaim any and all liability for any errors, inaccuracies or incompleteness contained in any datasheet or in any other disclosure relating to any product.

Vishay makes no warranty, representation or guarantee regarding the suitability of the products for any particular purpose or the continuing production of any product. To the maximum extent permitted by applicable law, Vishay disclaims (i) any and all liability arising out of the application or use of any product, (ii) any and all liability, including without limitation special, consequential or incidental damages, and (iii) any and all implied warranties, including warranties of fitness for particular purpose, non-infringement and merchantability.

Statements regarding the suitability of products for certain types of applications are based on Vishay's knowledge of typical requirements that are often placed on Vishay products in generic applications. Such statements are not binding statements about the suitability of products for a particular application. It is the customer's responsibility to validate that a particular product with the properties described in the product specification is suitable for use in a particular application. Parameters provided in datasheets and / or specifications may vary in different applications and performance may vary over time. All operating parameters, including typical parameters, must be validated for each customer application by the customer's technical experts. Product specifications do not expand or otherwise modify Vishay's terms and conditions of purchase, including but not limited to the warranty expressed therein.

Except as expressly indicated in writing, Vishay products are not designed for use in medical, life-saving, or life-sustaining applications or for any other application in which the failure of the Vishay product could result in personal injury or death. Customers using or selling Vishay products not expressly indicated for use in such applications do so at their own risk. Please contact authorized Vishay personnel to obtain written terms and conditions regarding products designed for such applications.

No license, express or implied, by estoppel or otherwise, to any intellectual property rights is granted by this document or by any conduct of Vishay. Product names and markings noted herein may be trademarks of their respective owners.

© 2017 VISHAY INTERTECHNOLOGY, INC. ALL RIGHTS RESERVED