Part Number: **JP-8099-*****
Description: **Small Angled Nose Telecom Clip with Attached Single Spike**
3107

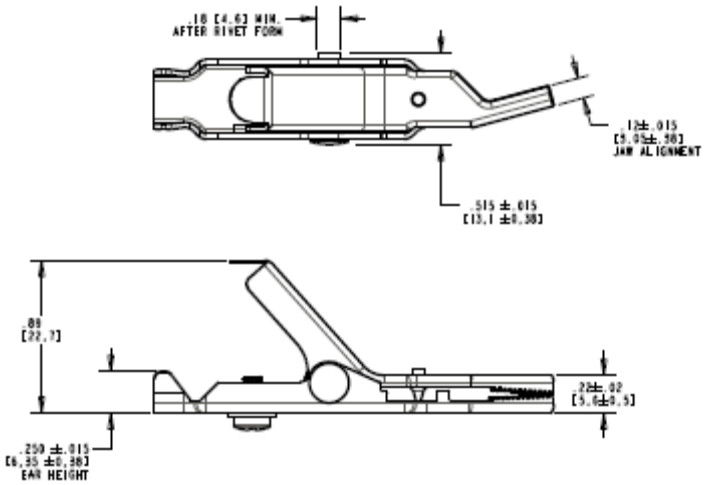

- Small Angled Nose Telecom Clip with Single Spike
- Mueller — J.S. Popper brand
- Jaw opens 1.0” (25.4 mm)
- Uses single spike to pierce insulation
- Material: nickel-silver jaws; includes brass screw, brass nut, brass washer, and bronze star washer
- Length: 2.61” (66.4 mm)
- Connection Options: -N Without Hardware, -L With Loose Hardware, -J Banana Jack, -TJ Threaded Banana Jack
- RoHS Compliant

Mueller Electric Company *ISO 9001:2000* *TEL. 800-955-2629*
1625 E. 31st Street *Over 95 Years Of Innovation* *TEL. 216-771-5225*
Cleveland, Ohio 44114 *www.muellerelectric.com* *FAX. 216-771-3068*

sales@prom-elec.com / ООО ПРОМЭЛЕКТРОНИКА