C503B-Axx-015: 5-mm Round Amber LEDs

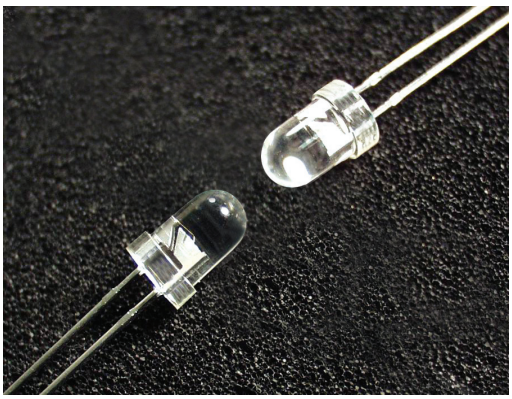

PRODUCT DESCRIPTION

Round LEDs offer superior light output for excellent readability in sunlight and dependable performance. They provide extremely stable light output over long periods of time.

These lamps are made with an advanced optical-grade epoxy offering superior high-temperature and high-moisture-resistance performance in outdoor signal and sign applications.

FEATURES

- Size (mm): 5
- Color and Typical Dominant Wavelength:
  Amber (591nm)
- Luminous Intensity (mcd)
  C503B-AAS/AAN-015:
  (12000-32900)
- Viewing angles:
  C503B-AAS/AAN-015
  15 degree minimum
- Lead - Free
- RoHS Compliant

APPLICATIONS

- Electronic Signs & Signals (ESS)
- Motorway Signs
- Variable Message Sign (VMS)
- Advertising Signs
- Petrol Signs
- Amusement
- Roadway Signs

Cree LED / 4400 Silicon Drive / Durham, NC 27703 USA / +1.919.313.5330 / www.cree-led.com

© 2021 Cree LED. The information in this document is subject to change without notice. Cree® and the Cree logo are registered trademarks, and the Cree LED logo is a trademark, of Cree, Inc.

sales@prom-elec.com / ООО ПРОМЭЛЕКТРОНИКА

ABSOLUTE MAXIMUM RATINGS (T_A = 25°C)

Items	Symbol	Absolute Maximum Rating	Unit
Forward Current	I_F	50 Note1	mA
Peak Forward Current Note2	I_{FP}	200	mA
Reverse Voltage	V_R	5	V
Power Dissipation	P_D	130	mW
Operation Temperature	T_{opr}	-40 ~ +100	°C
Storage Temperature	T_{stg}	-40 ~ +100	°C
Lead Soldering Temperature	T_{sol}	Max. 260°C for 3 sec. max. (3 mm from the base of the epoxy bulb)	
Electrostatic Discharge Classification (MIL-STD-883E)	ESD	Class 2	

Note:

1. For long term performance the drive currents between 10mA and 30mA are recommended. Please contact Cree LED sales representative for more information on recommended drive conditions.
2. Pulse width ≤0.1 msec, duty ≤1/10.

TYPICAL ELECTRICAL & OPTICAL CHARACTERISTICS (T_A = 25°C)

Characteristics	Symbol	Condition	Unit	Minimum	Typical	Maximum
Forward Voltage	V_F	I_F = 20 mA	V		2.1	2.6
Reverse Current	I_R	V_R = 5 V	µA			100
Dominant Wavelength	λ_D	I_F = 20 mA	nm	584	591	596
Luminous Intensity	I_V	I_F = 20 mA	mcd	12000	15000	
50% Power Angle	2θ½	I_F = 20 mA	deg	15		

* Continuous reverse voltage can cause LED damage.

© 2021 Cree LED. The information in this document is subject to change without notice. Cree® and the Cree logo are registered trademarks, and the Cree LED logo is a trademark, of Cree, Inc.

INTENSITY BIN LIMIT

Amber

15° min(20 mA) - C503B-AAS/AAN-015		
Bin Code	Min.(mcd)	Max.(mcd)
A0	12000	16800
B0	16800	23500
C0	23500	32900

* Tolerance of measurement of luminous intensity is ±15%

COLOR BIN LIMIT

Amber (20 mA) - C503B-Axx		
Bin Code	Min.(nm)	Max.(nm)
A2	584	587
A3	587	590
A4	590	593
A5	593	596

* Tolerance of measurement of dominant wavelength is ±1 nm.

© 2021 Cree LED. The information in this document is subject to change without notice. Cree® and the Cree logo are registered trademarks, and the Cree LED logo is a trademark, of Cree, Inc.

ORDER CODE TABLE

Color	Viewing Angle	Order Code	Luminous Intensity (mcd)		Dominant Wavelength				Package	Standoff
			Min.	Max.	Color Bin	Min.(nm)	Color Bin	Max.(nm)		
Amber	15°	C503B-AAS-CA0C0251-015	12000	32900	A2	584	A5	596	Bulk	Yes
		C503B-AAS-CA0C0341-015	12000	32900	A3	587	A4	593	Bulk	Yes
		C503B-AAN-CA0C0251-015	12000	32900	A2	584	A5	596	Bulk	No
		C503B-AAN-CA0C0341-015	12000	32900	A3	587	A4	593	Bulk	No
		C503B-AAS-CA0C0252-015	12000	32900	A2	584	A5	596	Ammo	Yes
		C503B-AAS-CA0C0342-015	12000	32900	A3	587	A4	593	Ammo	Yes
		C503B-AAN-CA0C0252-015	12000	32900	A2	584	A5	596	Ammo	No
		C503B-AAN-CA0C0342-015	12000	32900	A3	587	A4	593	Ammo	No

Notes:

- The above kit numbers represent order codes that include multiple intensity-bin and color-bin codes. Only one intensity-bin code and one color-bin code will be shipped on each bulk. Single intensity-bin code and single color-bin codes will not be orderable.
- Please refer to the HB LED Lamp Reliability Test Standards document for reliability test conditions.
- Please refer to the HB LED Lamp Soldering & Handling document for information about how to use this LED product safely.

© 2021 Cree LED. The information in this document is subject to change without notice. Cree® and the Cree logo are registered trademarks, and the Cree LED logo is a trademark, of Cree, Inc.

GRAPHS

The data below are collected from statistical figures that do not necessarily correspond to the actual parameters of each single LED. Hence, these data will be changed without further notice.

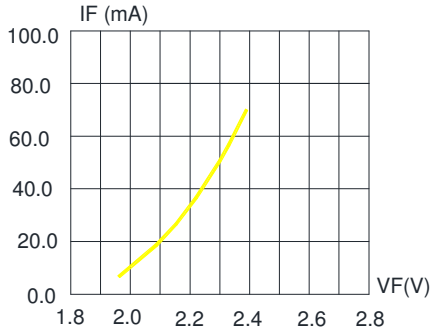

FIG.1 FORWARD CURRENT VS. FORWARD VOLTAGE.

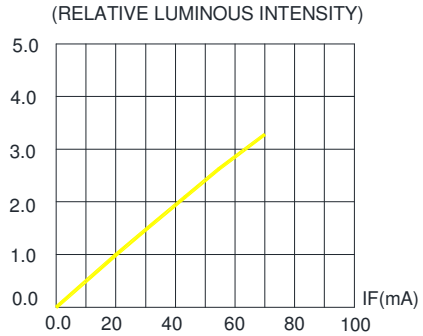

FIG.2 RELATIVE LUMINOUS INTENSITY VS. FORWARD CURRENT

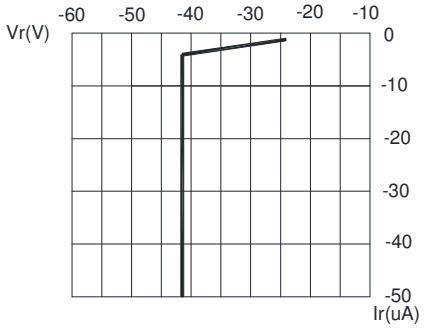

FIG.3 REVERSE CURRENT VS. REVERSE VOLTAGE.

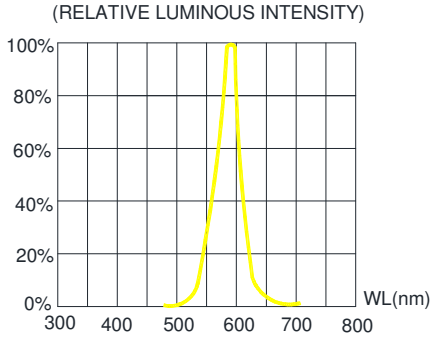

FIG.4 RELATIVE LUMINOUS INTENSITY VS. WAVELENGTH.

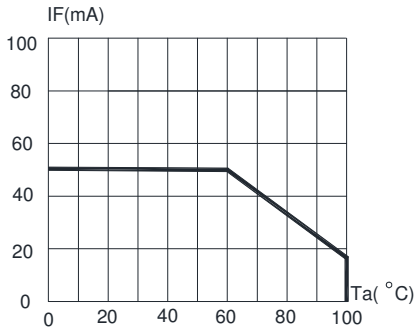

FIG.5 MAXIMUM FORWARD DC CURRENT VS AMBIENT TEMPERATURE (Tjmax=110℃)

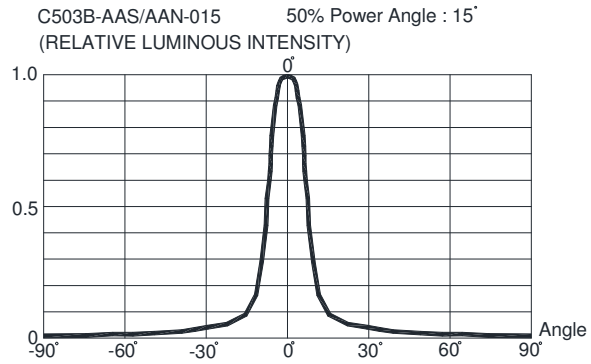

FIG.6 FAR FIELD PATTERN

© 2021 Cree LED. The information in this document is subject to change without notice. Cree® and the Cree logo are registered trademarks, and the Cree LED logo is a trademark, of Cree, Inc.

MECHANICAL DIMENSIONS

All dimensions are in mm. Tolerance is ±0.25 mm unless otherwise noted.
An epoxy meniscus may extend about 1.5 mm down the leads.
Burr around bottom of epoxy may be 0.5 mm max.

C503B-AAS-015:

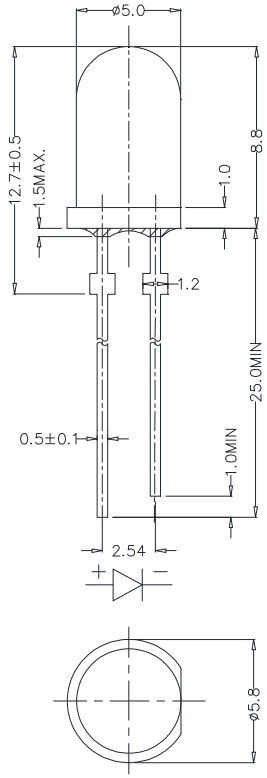

C503B-AAN-015:

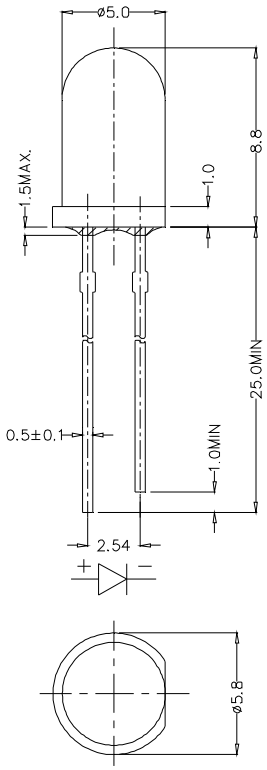

NOTES

RoHS Compliance

The levels of RoHS restricted materials in this product are below the maximum concentration values (also referred to as the threshold limits) permitted for such substances, or are used in an exempted application, in accordance with EU Directive 2011/65/EC (RoHS2), as implemented January 2, 2013. RoHS Declarations for this product can be obtained from your Cree LED representative or from the Product Ecology section of the Cree LED website.

Vision Advisory

WARNING: Do not look at an exposed lamp in operation. Eye injury can result.

© 2021 Cree LED. The information in this document is subject to change without notice. Cree® and the Cree logo are registered trademarks, and the Cree LED logo is a trademark, of Cree, Inc.

KIT NUMBER SYSTEM

Cree LED lamps are tested and sorted into performance bins. A bin is specified by ranges of color, forward voltage, and brightness. Sorted LEDs are packaged for shipping in various convenient options.

Cree LEDs are sold by order codes in combinations of bins called kits. Order codes are configured in the following manner:

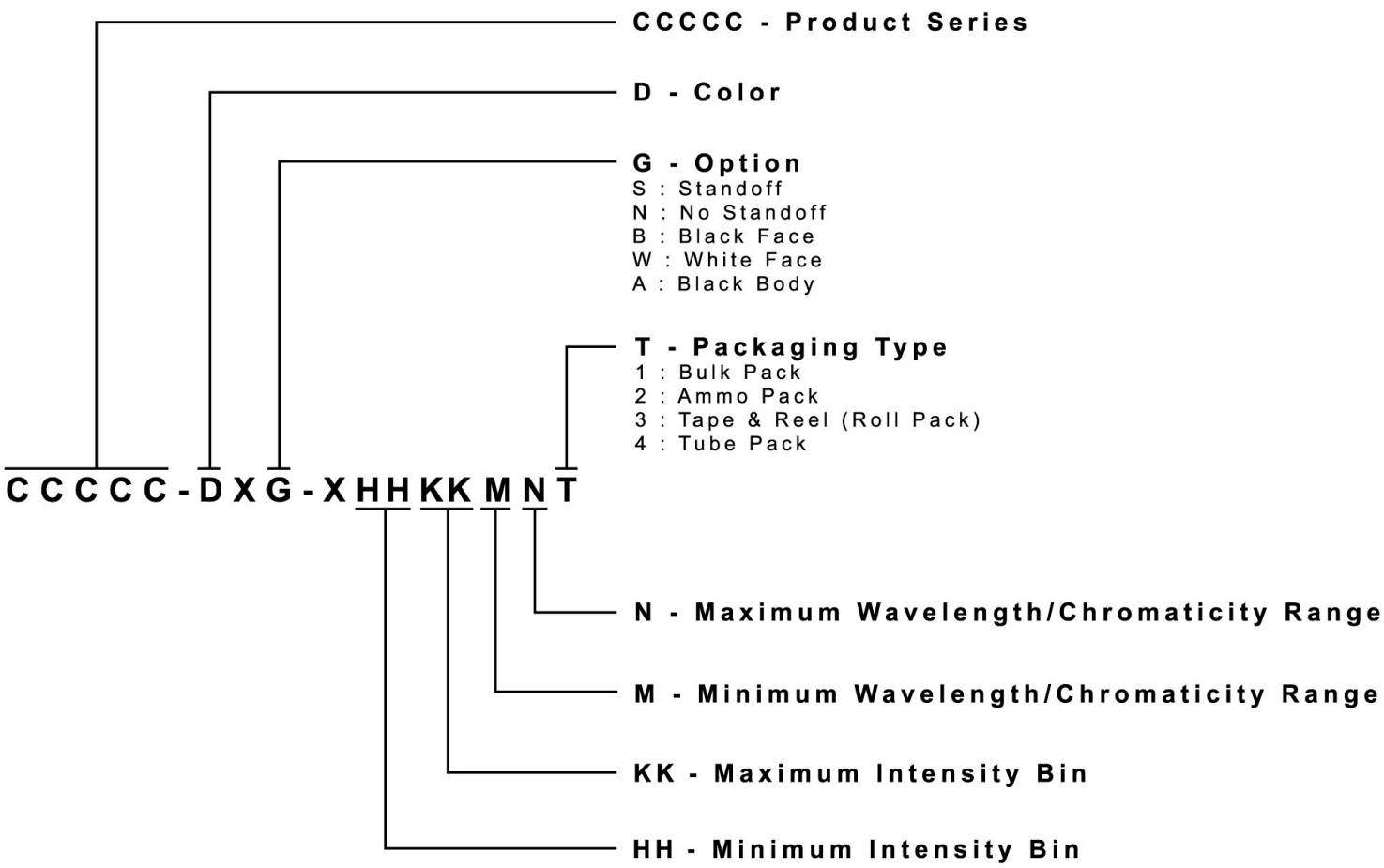

© 2021 Cree LED. The information in this document is subject to change without notice. Cree® and the Cree logo are registered trademarks, and the Cree LED logo is a trademark, of Cree, Inc.

SOLDERING GUIDELINES

The LED soldering specification is shown below(suitable for both leaded solder & lead-free solder):

Manual Soldering		Solder Dipping	
Soldering iron	35 W max	Preheat	110 °C max
Temperature	300 °C max	Preheat time	60 seconds max
		Solder-bath temperature	260 °C Max
Soldering time	3 seconds max	Dipping time	5 seconds max
Position	Not less than 3 mm from the base of the package.	Position	Not less than 3 mm from the base of the package.

- Manual soldering onto the PCB is not recommended because soldering time is uncontrollable.
- The recommended wave soldering is as below:

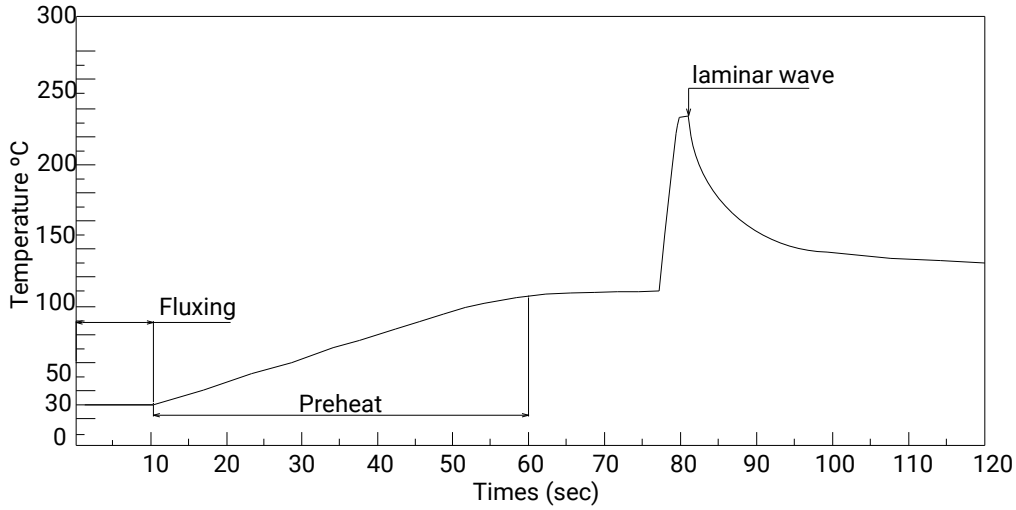

- Do not apply any stress to the LED package, particularly when heated.
- Only bottom preheat is suggested & should not preheat on top in order to reduce thermal stress experienced by the LEDs.
- The LEDs must not be re used once they have been extracted from PCB.
- After soldering the LEDs, the package should be protected from mechanical shock or vibration until the LEDs have reached 40 °C or below.
- Precautions must be taken as mechanical stress on the LEDs may be caused by PCB warpage or from the clinching and cutting of the LED leads.
- When it is necessary to clam the LEDs during soldering, it is important to ensure no mechanical stress is exerted on the LEDs.
- Cut the LED lead at normal room temperature. Lead cutting at high temperature may cause failure of the LEDs.
- Please refer to the HB LED Lamp Soldering & Handling document for information about how to use this LED product safely.

© 2021 Cree LED. The information in this document is subject to change without notice. Cree® and the Cree logo are registered trademarks, and the Cree LED logo is a trademark, of Cree, Inc.

PACKAGING

- The LEDs are packed in cardboard boxes after packaging in normal or anti-electrostatic bags.
- Cardboard boxes will be used to protect the LEDs from mechanical shock during transportation.
- The boxes are not water resistant, and they must be kept away from water and moisture.
- Max 500 pcs per bulk and Max 2500 pcs per ammo.

Bulk Pack Packaging Type:

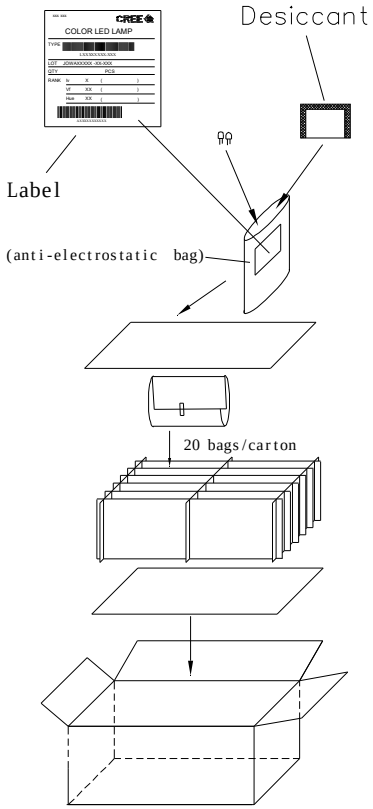

Ammo Pack Packaging Type:

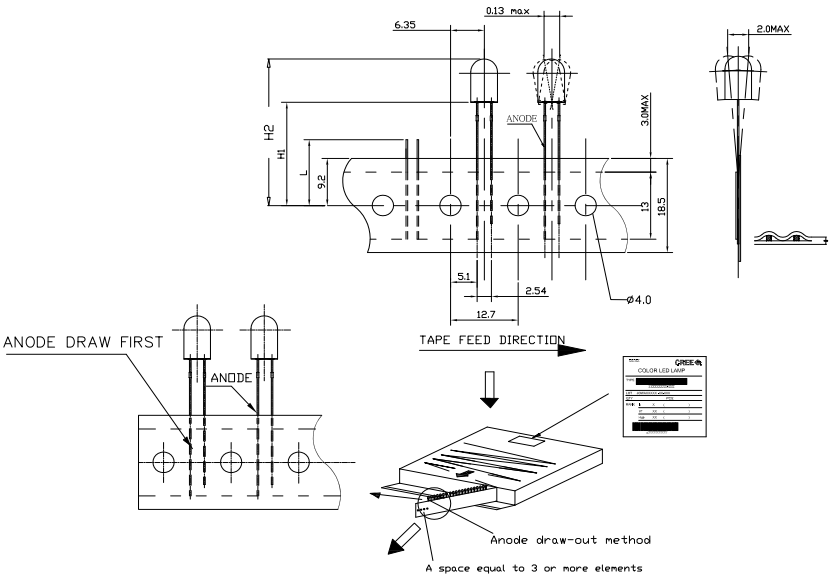

© 2021 Cree LED. The information in this document is subject to change without notice. Cree® and the Cree logo are registered trademarks, and the Cree LED logo is a trademark, of Cree, Inc.