OptoSupply
Light It Up

3mm Round Flashing Super Orange LED 1.8Hz 1/2 Duty Cycle

OSO5RS3131A

■Features

- High Luminous LEDs
- 3mm Round Standard Directivity
- Superior Weather-resistance
- Flashing Type
- Water Clear Type

■Applications

- Toys
- Games
- Audio
- Other Lighting

■Outline Dimension

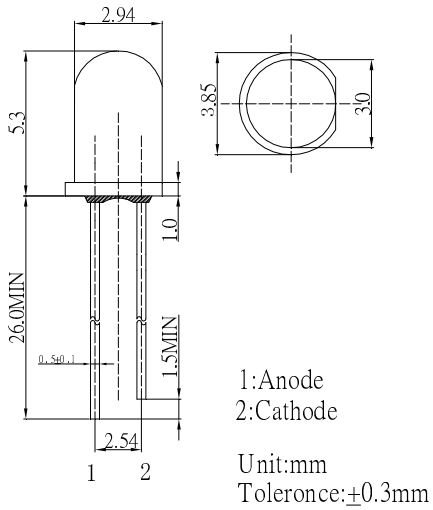

■Absolute Maximum Rating (Ta=25℃)

Item	Symbol	Value	Unit
Power Supply	Voltage	5	V
Operating Temperature	Topr	-30 ~ +85	℃
Storage Temperature	Tstg	-40~ +100	℃
Lead Soldering Temperature	Tsol	260℃/5sec	-

■Directivity

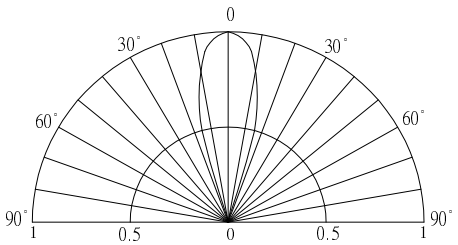

■Electrical -Optical Characteristics (Ta=25℃)

Item	Symbol	Condition	Min.	Typ.	Max.	Unit
DC Forward Voltage	Vdd	I_F=20mA	3.0	3.3	5.0	V
Oscillator Frequency*	Fled	I_F=20mA	-	1.8	-	Hz
Duty Cycle	Duty	I_F=20mA	-	1/2	-	-
Domi. Wavelength*	λ_D	I_F=20mA	600	605	610	nm
Luminous Intensity*	Iv	I_F=20mA	2180	3000	-	mcd
50% Power Angle	$2\theta_{1/2}$	I_F=20mA	-	30	-	deg

*1 Tolerance of dominant wavelength is ±1nm
*2 Tolerance of luminous intensity is ±15%
*3 Tolerance of Frequency is ±20%

LED & Application Technologies

ATTENTION
OBSERVE PRECAUTIONS
ELECTROSTATIC
SENSITIVE DEVICES

sales@prom-elec.com / ООО ПРОМЭЛЕКТРОНИКА