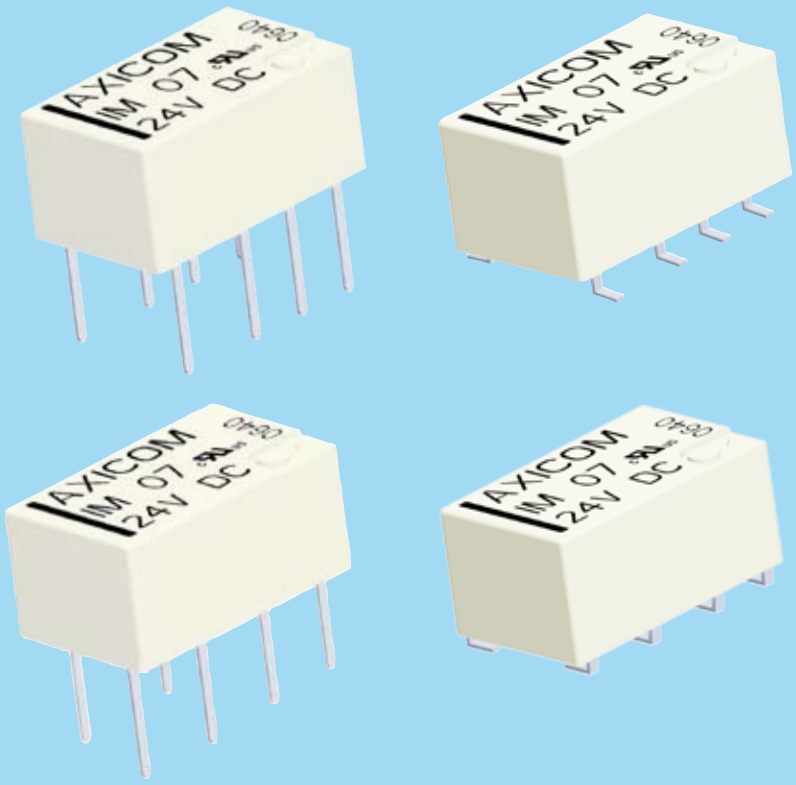

AXICOM

Telecom-, Signal and RF Relays

IM Relay

108-98001 • Sep. 07 Rev. G • ECOC: JM10

Tyco Electronics

Our commitment. Your advantage.

sales@prom-elec.com / ООО ПРОМЭЛЕКТРОНИКА

IM Relay

Disclaimer

While Tyco Electronics has made every reasonable effort to ensure the accuracy of the information in this datasheet, Tyco Electronics does not guarantee that it is error-free, nor does Tyco Electronics make any other representation, warranty or guarantee that the information is accurate, correct, reliable or current. Tyco Electronics reserves the right to make any adjustments to the information contained herein at any time without notice. Tyco Electronics expressly disclaims all implied warranties (and all express warranties, except as otherwise stated in this datasheet) regarding the information contained herein, including but not limited to any implied warranties or merchantability or fitness for a particular purpose. It is recommended that you test any new or replacement product before incorporating into a system.

The dimensions in this datasheet are for reference purpose only and are subject to change without notice. Specifications are subject to change without notice.

UL 508 File No. E 111441
UL 60950

IEC/EN60950 IEC Ref. Cert. No. 3270

Index

Dimensions 4
Coil Operating Range 5
Coil Data and Ordering Information 6
Contact Data 10
Insulation 11
General Data 11
Packing 13

IM Relay

Slim line AND low profile
2 pole telecom/signal relay, polarized
Through Hole Types (THT), standard version
with 5.08 mm, narrow version with 3.2 mm between the terminal rows or Surface Mount Type (SMT)

Relay types: non-latching with 1 coil
latching with 1 coil

ROHS compliant (Directive 2002/95/EC) as per product date code 0438.

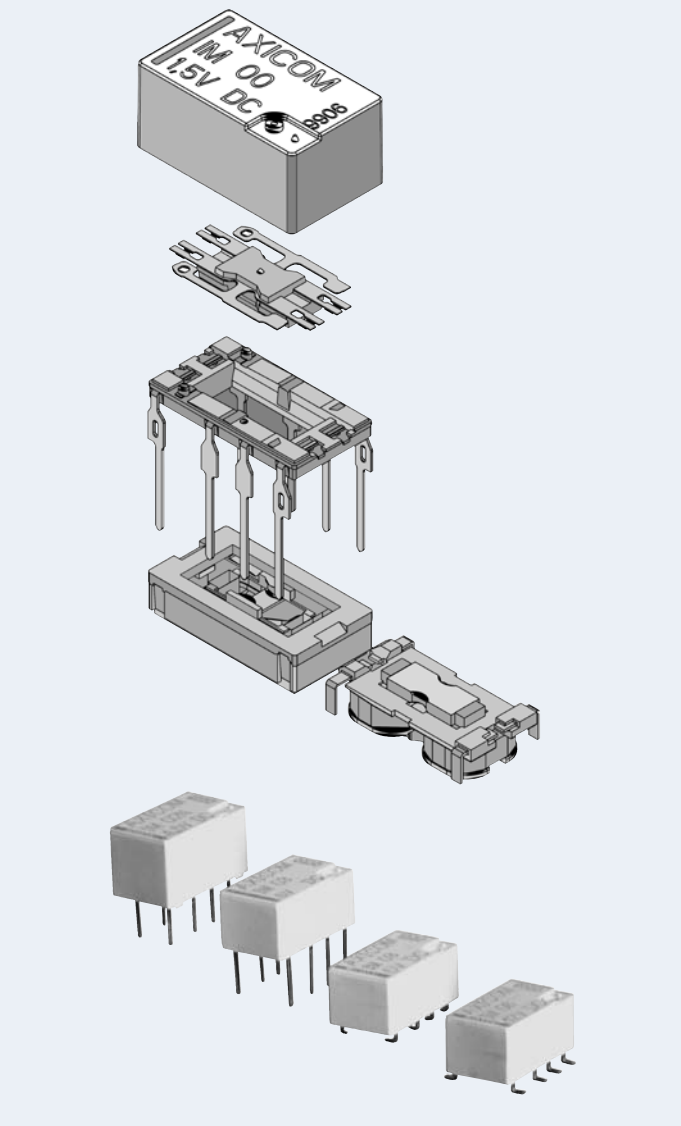

Features

- Telecom/signal relay (dry circuit, test access, ringing)
- Slim line 10 x 6 mm, 0.39 x 0.24 inch
- Low profile 5.65 mm, 0.222 inch
- Minimum board-space 60 mm²
- Switching current 2 A / 5 A
- 2 changeover contacts (2 form C / DPDT)
- Bifurcated contacts, gold plated
- High sensitivity results in low nominal power consumption
  140 mW for non latching standard
  100 mW for latching version and non latching high sensitive version
- Ultra high sensitive type 50 mW for non latching
- High surge capability (1.2/50 µs and 10/700 µs) meets Telcordia GR 1089, FCC Part 68 and ITU-T K20, 21, 45
  1500 V between open contacts
  2500 V between coil and contacts
- High mechanical shock resistance
  up to 300 G functional, up to 500 G survival
- Hermetically sealed (RT V)

Typical applications

- Communications equipment
  Linecard application – analog, ISDN, xDSL, PABX
  Voice over IP
- Office and business equipment
- Measurement and control equipment
- Consumer electronics, Set top boxes, HiFi
- Medical equipment

Options

- Surge capability 2500 V between open contacts

Insulation category

Supplementary insulation according	IEC / EN 60950
Working voltage	≤ 300 Vrms
Mains supply voltage	≤ 250 Vrms
Repetitive peak voltage	2500 V
Pollution degree	Internal: 1 External: 2
Flammability classification	V-0
Maximum operating temperature	85 °C

IM Relay

Dimensions

Dimensions in mm

	IM THT Standard		IM THT Narrow		IM SMT Gull Wings		IM SMT J-Legs	
	mm	inch	mm	inch	mm	inch	mm	inch
L	10.00 ± 0.08	0.393 ± 0.003	10.00 ± 0.08	0.393 ± 0.003	10.00 ± 0.08	0.393 ± 0.003	10.00 ± 0.08	0.393 ± 0.003
W	6.00 ± 0.08	0.236 ± 0.003	5.70 ± 0.30	0.224 ± 0.012	6.00 ± 0.08	0.236 ± 0.003	6.00 ± 0.08	0.236 ± 0.003
H	5.65 – 0.20	0.222 – 0.008	5.80 ± 0.08	0.230 ± 0.003	5.65 – 0.20	0.222 – 0.008	5.65 – 0.02	0.222 – 0.008
T	3.2	0.125	3.2	0.125	N/A	N/A	N/A	N/A
T1	N/A	N/A	N/A	N/A	7.50 ± 0.30	0.295 ± 0.011	2.80 ± 0.20	0.110 ± 0.007
T2	5.08 ± 0.10	0.200 ± 0.004	3.20 ± 0.10	0.126 ± 0.004	5.08 ± 0.10	0.200 ± 0.004	5.08 ± 0.10	0.200 ± 0.004
D1	3.20 ± 0.15	0.126 ± 0.006	3.20 ± 0.15	0.126 ± 0.006	3.20 ± 0.15	0.126 ± 0.006	3.20 ± 0.15	0.126 ± 0.006
D2	2.20 ± 0.15	0.087 ± 0.006	2.20 ± 0.15	0.087 ± 0.006	2.20 ± 0.15	0.087 ± 0.006	2.20 ± 0.15	0.087 ± 0.006
Tw	0.40	0.015	0.4	0.015	0.4	0.015	0.4	0.015
S	0.30 ± 0.05	0.011 ± 0.002	0.30 ± 0.05	0.011 ± 0.002	N/A	N/A	N/A	N/A

THT Version

Standard version

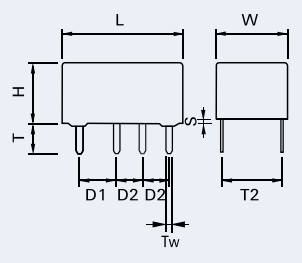

Narrow version

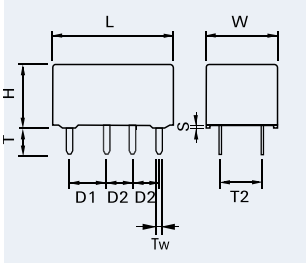

SMT Version

Gull Wings

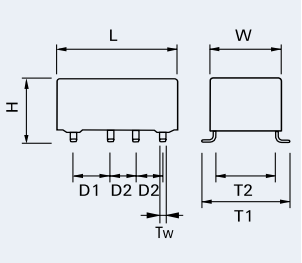

J-Legs

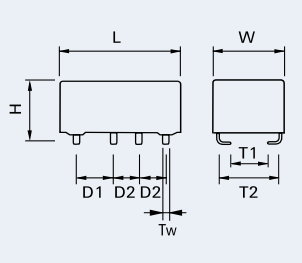

Mounting hole layout

View onto the component side of the PCB (top view)

Standard version

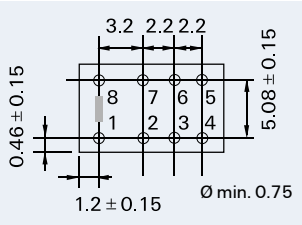

Narrow version

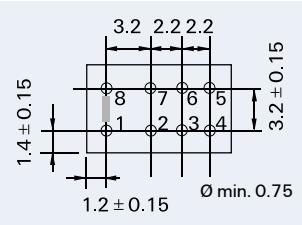

Solder pad layout

View onto the component side of the PCB (top view)

Gull Wings

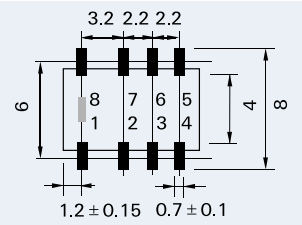

J-Legs

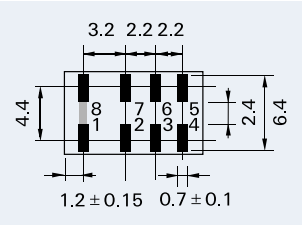

Terminal assignment

Relay – top view

Non-latching type

not energized condition

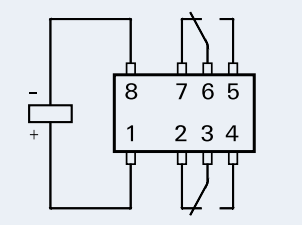

Latching type, 1 coil

reset condition

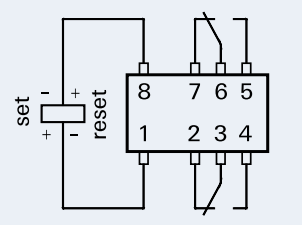

Relay Code

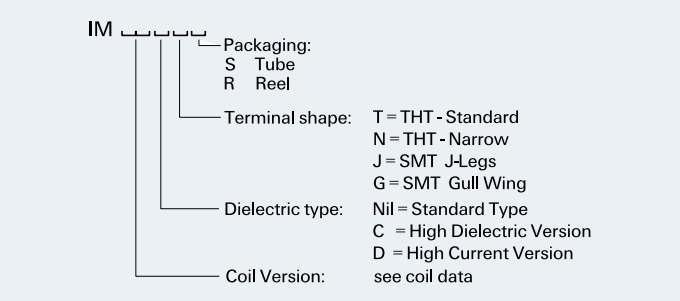

IM Relay

Coil Operating Range

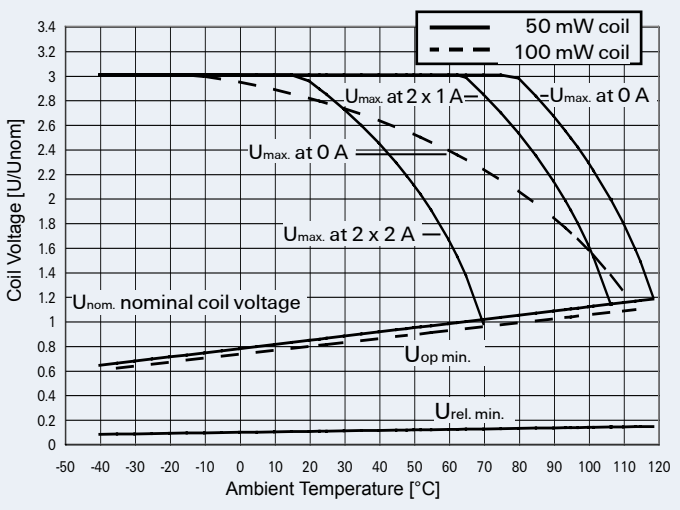

U_{nom} = Nominal coil voltage

$U_{max.}$ = Upper limit of the operative range of the coil voltage (limiting voltage) when coils are continously energized

$U_{op.\ min.}$ = Lower limit of the operative range of the coil voltage (reliable operate voltage)

For latching relays Uset min. resp. Ureset min.

$U_{rel.\ min.}$ = Lower limit of the operative range of the coil voltage (reliable release voltage)

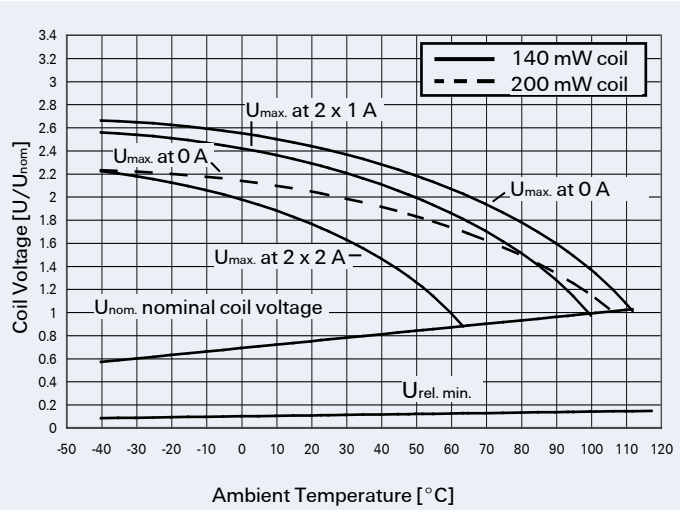

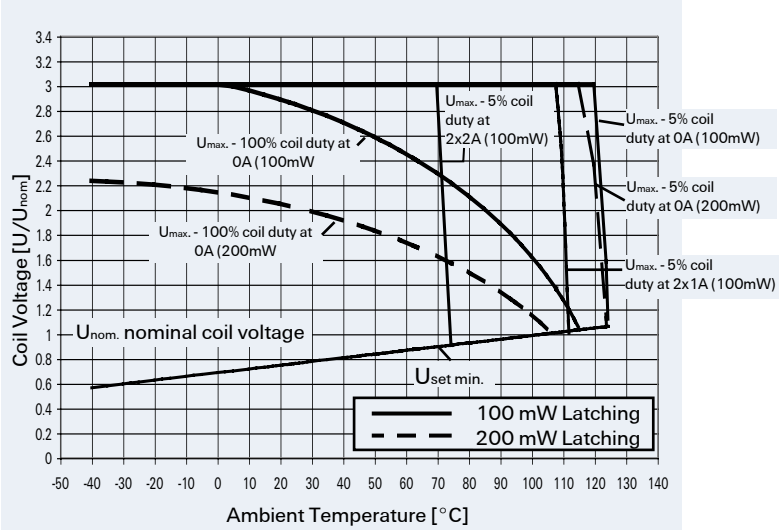

IM Relay

Coil Data (values at 23 °C) — Ordering Information

Nominal voltage U_{nom}	Operate/set voltage range		Release/ reset voltage Minimum	Coil power	Coil Resistance	Relay code	Tyco part number
	Minimum voltage U_{min}	Maximum voltage U_{max}					
Vdc	Vdc	Vdc	Vdc	mW	Ω / ± 10 %		

Standard Version

THT Standard non-latching 1 coil

1.5	1.13	3.60	0.15	140	16	IM00TS	3-1462037-5
3	2.25	7.20	0.30	140	64	IM01TS	1462037-4
4.5	3.38	10.80	0.45	140	145	IM02TS	1-1462037-3
5	3.75	12.10	0.50	140	178	IM03TS	1-1462037-8
6	4.50	14.50	0.60	140	257	IM04TS	4-1462037-1
9	6.75	21.70	0.90	140	579	IM05TS	2-1462037-2
12	9.00	28.90	1.20	140	1029	IM06TS	2-1462037-7
24	18.00	48.50	2.40	200	2880	IM07TS	3-1462037-0

THT Narrow non-latching 1 coil

1.5	1.13	3.60	0.15	140	16	IM00NS	1-1462038-0
3	2.25	7.20	0.30	140	64	IM01NS	1-1462038-1
4.5	3.38	10.80	0.45	140	145	IM02NS	1-1462038-2
5	3.75	12.10	0.50	140	178	IM03NS	1-1462038-3
6	4.50	14.50	0.60	140	257	IM04NS	1-1462038-4
9	6.75	21.70	0.90	140	579	IM05NS	1-1462038-5
12	9.00	28.90	1.20	140	1029	IM06NS	1-1462038-6
24	18.00	48.50	2.40	200	2880	IM07NS	1-1462038-7

SMT J-Legs non-latching 1 coil

1.5	1.13	3.60	0.15	140	16	IM00JR	3-1462037-9
3	2.25	7.20	0.30	140	64	IM01JR	4-1462037-0
4.5	3.38	10.80	0.45	140	145	IM02JR	1-1462037-1
5	3.75	12.10	0.50	140	178	IM03JR	1-1462037-6
6	4.50	14.50	0.60	140	257	IM04JR	4-1462037-4
9	6.75	21.70	0.90	140	579	IM05JR	4-1462037-5
12	9.00	28.90	1.20	140	1029	IM06JR	4-1462037-6
24	18.00	48.50	2.40	200	2880	IM07JR	4-1462037-8

SMT Gull Wings non-latching 1 coil

1.5	1.13	3.60	0.15	140	16	IM00GR	3-1462037-7
3	2.25	7.20	0.30	140	64	IM01GR	1462037-1
4.5	3.38	10.80	0.45	140	145	IM02GR	1462037-9
5	3.75	12.10	0.50	140	178	IM03GR	1-1462037-4
6	4.50	14.50	0.60	140	257	IM04GR	4-1462037-2
9	6.75	21.70	0.90	140	579	IM05GR	3-1462037-4
12	9.00	28.90	1.20	140	1029	IM06GR	2-1462037-3
24	18.00	48.50	2.40	200	2880	IM07GR	4-1462037-7

Further coil versions are available on request.

IM Relay

Coil Data (values at 23 °C) — Ordering Information

Nominal voltage U_{nom}	Operate/set voltage range		Release/ reset voltage Minimum	Coil power	Coil Resistance	Relay code	Tyco part number
	Minimum voltage U_{min}	Maximum voltage U_{max}					
Vdc	Vdc	Vdc	Vdc	mW	Ω / ± 10 %		

Latching Version

THT Standard latching 1 coil

1.5	1.13	4.30	-1.13	100	23	IM40TS	5-1462037-0
3	2.25	8.40	-2.25	100	90	IM41TS	5-1462037-3
4.5	3.38	12.90	-3.38	100	203	IM42TS	5-1462037-6
5	3.75	14.30	-3.75	100	250	IM43TS	5-1462037-8
6	4.50	17.10	-4.50	100	360	IM44TS	6-1462037-1
9	6.75	25.70	-6.75	100	810	IM45TS	3-1462037-2
12	9.00	34.30	-9.00	100	1440	IM46TS	6-1462037-6
24	18.00	48.50	-18.00	200	2880	IM47TS	6-1462037-9

THT Narrow latching 1 coil

1.5	1.13	4.30	-1.13	100	23	IM40NS	1-1462038-8
3	2.25	8.40	-2.25	100	90	IM41NS	1-1462038-9
4.5	3.38	12.90	-3.38	100	203	IM42NS	2-1462038-0
5	3.75	14.30	-3.75	100	250	IM43NS	2-1462038-1
6	4.50	17.10	-4.50	100	360	IM44NS	2-1462038-2
9	6.75	25.70	-6.75	100	810	IM45NS	2-1462038-3
12	9.00	34.30	-9.00	100	1440	IM46NS	2-1462038-4
24	18.00	48.50	-18.00	200	2880	IM47NS	2-1462038-5

SMT J-Legs latching 1 coil

1.5	1.13	4.30	-1.13	100	23	IM40JR	5-1462037-2
3	2.25	8.40	-2.25	100	90	IM41JR	5-1462037-5
4.5	3.38	12.90	-3.38	100	203	IM42JR	5-1462037-7
5	3.75	14.30	-3.75	100	250	IM43JR	6-1462037-0
6	4.50	17.10	-4.50	100	360	IM44JR	6-1462037-3
9	6.75	25.70	-6.75	100	810	IM45JR	6-1462037-5
12	9.00	34.30	-9.00	100	1440	IM46JR	6-1462037-8
24	18.00	48.50	-18.00	200	2880	IM47JR	7-1462037-1

SMT Gull Wings latching 1 coil

1.5	1.13	4.30	-1.13	100	23	IM40GR	5-1462037-1
3	2.25	8.40	-2.25	100	90	IM41GR	5-1462037-4
4.5	3.38	12.90	-3.38	100	203	IM42GR	3-1462037-1
5	3.75	14.30	-3.75	100	250	IM43GR	5-1462037-9
6	4.50	17.10	-4.50	100	360	IM44GR	6-1462037-2
9	6.75	25.70	-6.75	100	810	IM45GR	6-1462037-4
12	9.00	34.30	-9.00	100	1440	IM46GR	6-1462037-7
24	18.00	48.50	-18.00	200	2880	IM47GR	7-1462037-0

Further coil versions are available on request.

IM Relay

Coil Data (values at 23 °C) Ordering Information

Nominal voltage U_{nom}	Operate/set voltage range		Release/ reset voltage Minimum	Coil power	Coil Resistance	Relay code	Tyco part number
	Minimum voltage U_{min}	Maximum voltage U_{max}					
Vdc	Vdc	Vdc	Vdc	mW	Ω / ± 10 %		

High Sensitive Version

SMT Gull Wings non-latching 1 coil

3	2.40	8.70	0.30	100	91	IM11GR	9-1462038-5
4.5	3.60	13.10	0.45	100	194	IM12GR	1462039-3
5	4.00	14.60	0.50	100	238	IM13GR	1462039-4
12	9.60	35.00	1.20	110	1315	IM16GR	1462039-5
24	19.20	57.80	2.40	140	4120	IM17GR	1462039-6

High Dielectric Version

SMT Gull Wings non-latching 1 coil

3	2.25	7.20	0.30	140	64	IM01CGR	1462038-4
4.5	3.38	10.80	0.45	140	145	IM02CGR	1462038-1
5	3.75	12.10	0.50	140	178	IM03CGR	1462038-2
9	6.75	21.70	0.90	140	579	IM05CGR	1462038-3
12	9.00	28.90	1.20	140	1028	IM06CGR	9-1462037-9
24	18.00	48.50	2.40	200	2880	IM07CGR	1462039-2

SMT Gull Wings latching 1 coil

4.5	3.38	12.90	-3.38	100	203	IM42CGR	4-1462039-1
5	3.75	14.30	-3.75	100	250	IM43CGR	9-1462038-7

High Current/Low Contact Resistance Version

SMT Gull Wings non-latching 1 coil

4.5	3.38	10.80	0.45	140	145	IM02DGR	9-1462038-8
5	3.75	12.10	0.50	140	178	IM03DGR	9-1462038-9
9	6.75	21.70	0.90	140	579	IM05DGR	1-1462039-7
12	9.00	28.90	1.20	140	1028	IM06DGR	1-1462039-8

SMT Gull Wings latching 1 coil

2.4	1.80	6.80	-1.80	100	58	IM48DGR	1462039-9
4.5	3.38	12.90	-3.38	100	203	IM42DGR	1-1462039-9

Further coil versions are available on request.

IM Relay

Coil Data (values at 23 °C) Ordering Information

Nominal voltage U_{nom}	Operate/set voltage range		Release/ reset voltage Minimum	Coil power	Coil Resistance	Relay code	Tyco part number
	Minimum voltage U_{min}	Maximum voltage U_{max}					
Vdc	Vdc	Vdc	Vdc	mW	Ω / ± 10 %		

Ultra High Sensitive Version

SMT Gull Wings non-latching 1 coil

3	2.55	10.80	0.30	50	180	IM21GR	2-1462039-6
4.5	3.83	16.20	0.45	50	405	IM22GR	2-1462039-7
5	4.25	18.00	0.50	50	500	IM23GR	2-1462039-9
12	10.20	43.20	1.20	50	2880	IM26GR	3-1462039-1

THT non-latching 1 coil

3	2.55	10.80	0.30	50	180	IM21TS	1-1462039-5
4.5	3.83	16.20	0.45	50	405	IM22TS	2-1462039-8
5	4.25	18.00	0.50	50	500	IM23TS	3-1462039-0
12	10.20	43.20	1.20	50	2880	IM26TS	3-1462039-2

Further coil versions are available on request.

IM Relay

Contact Data

		„D“ Version
Number of contacts and type	2 changeover contacts	
Contact assembly	Bifurcated contacts	
Contact material	Palladium-ruthenium, gold-covered	Silver-nickel, gold-covered
Limiting continuous current at max. ambient temperature	2 A	5 A
Maximum switching current	2 A	5 A
Maximum swichting voltage	220 Vdc 250 Vac	
Maximum switching capacity	60 W, 62.5 VA	
Thermoelectric potential	< 10 µV	
Minimum switching voltage	100 µV	
Initial contact resistance / measuring condition: 10 mA / 20 mV	< 50 mΩ	
Electrical endurance at contact application 0 (≤ 30 mV / ≥ 10 mA) cable load open end Resistive load at 125Vdc / 0.24 A - 30 W at 220 Vdc / 0.27 A - 60 W at 250 Vac / 0.25 A - 62.5 VA at 30 Vdc / 1 A - 30 W at 30 Vdc / 2 A - 60 W	min. 2.5 x 10^6 operations min. 2.0 x 10^6 operations min. 5 x 10^5 operations min. 1 x 10^5 operations min. 1 x 10^5 operations min. 5 x 10^5 operations min. 1 x 10^5 operations	
Mechanical endurance	typ. 10^8 operations	
UL contact ratings	220 Vdc / 0.24 A - 60 W 125 Vdc / 0.24 A - 30 W 250 Vac / 0.25 A - 62.5 VA 125 Vac / 0.5 A - 62.5 VA 30 Vdc / 2 A - 60 W	

Max. DC Load Breaking Capacity

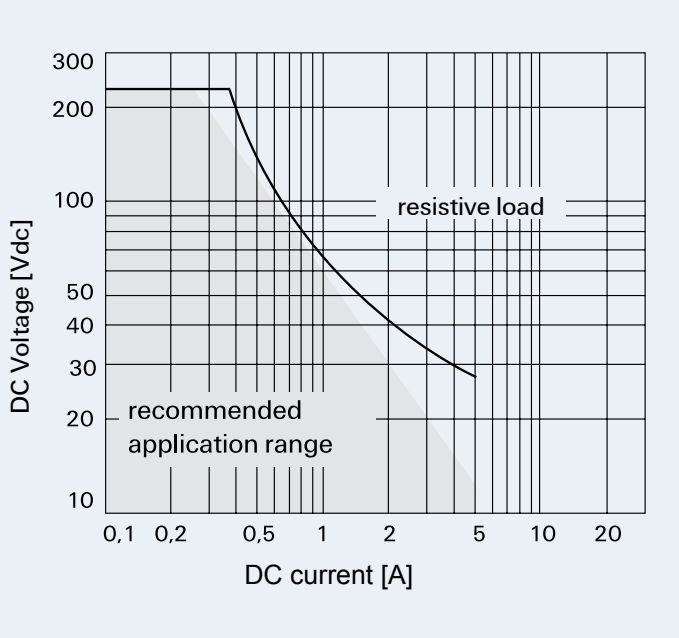

IM Relay

Insulation

	Standard, Sensitive, Ultra High Sensitive Version	„C“ Version High Dielectric	„D“ Version High Current
Insulation resistance at 500 Vdc	> 10^9 Ω	> 10^9 Ω	> 10^9 Ω
Dielectric test voltage (1 min)			
between coil and contacts	1800 Vrms	1800 Vrms	1500 Vrms
between adjacent contact sets	1000 Vrms	1800 Vrms	750 Vrms
between open contacts	1000 Vrms	1500 Vrms	750 Vrms
Surge voltage resistance			
according to Telcordia TR-NWT-001089 (2/10 µs)			
between coil and contacts	2500 V	2500 V	2000 V
between adjacent contact sets	1500 V	2500 V	1000 V
between open contacts	1500 V	2500 V	1000 V
according / EC 60950 (10/ 700 µs)			
between coil and contacts	2500 V	2500 V	2000 V
between adjacent contact sets	1500 V	2500 V	1000 V
between open contacts	1500 V	2500 V	1000 V

High Frequency Data

Capacitance	
between coil and contacts	max. 2 pF
between adjacent contact sets	max. 2 pF
between open contacts	max. 1 pF
RF Characteristics	
Isolation at 100 MHz / 900 MHz	- 37.0 dB / - 18.8 dB
Insertion loss at 100 MHz / 900 MHz	- 0.03 dB / - 0.33 dB
V.S.W.R. at 100 MHz / 900 MHz	1.06 / 1.49

General Data

Operate time at U_{nom} typ. / max.	1 ms / 3 ms
Reset time (latching) at U_{nom} , typ. / max.	1 ms / 3 ms
Release time without diode in parallel (non-latching), typ. / max.	1 ms / 3 ms
Release time with diode in parallel (non-latching), typ. / max.	3 ms / 5 ms
Bounce time at closing contact, typ. / max.	1 ms / 5 ms
Maximum switching rate without load	50 operations/s
Ambient temperature	-40 °C ... +85 °C
Thermal resistance	< 150 K/W
Maximum permissible coil temperature	125 °C
Vibration resistance (function)	20 G 10 to 500 Hz
Shock resistance, half sinus, 11 ms Shock resistance, half sinus, 0.5 ms	50 G (function) 500 G (damage)
Degree of protection / Environmental protection	immersion cleanable, IP 67 / RT V
Needle flame test	application time 20 s, no burning and glowing
Mounting position	any
Processing information	Ultrasonic cleaning is not recommended
Weight (mass)	max. 0.75 g
Terminal surface	NiPdAu
Moisture sensitive level (JEDEC J-STD-020B) - SMD types	MSL 3
Resistance to soldering heat	260 °C / 10 s

All data refers to 23 °C unless otherwise specified.

IM Relay

Recommended Soldering Conditions

Soldering conditions according IEC 60058-2-58 and IPC/JEDEC J-STD-020B

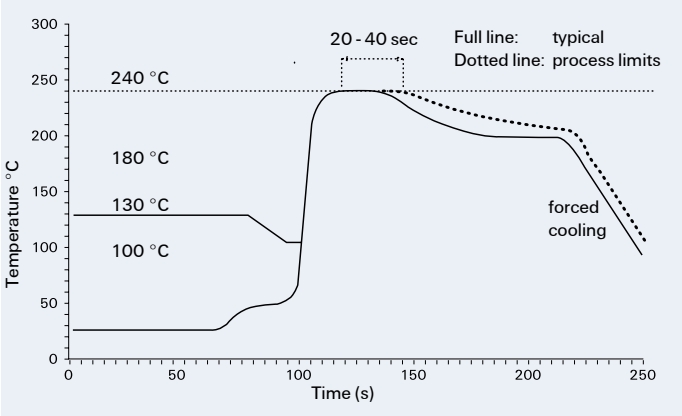

Vapor Phase Soldering: Temperature/Time Profile
(Lead and Housing Peak Temperature)

Recommended reflow soldering profile

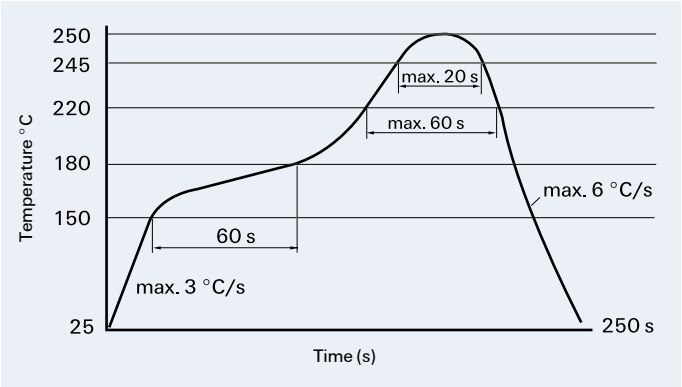

Infrared Soldering: Temperature/Time Profile
(Lead and Housing Peak Temperature)

Resistance to soldering heat - Reflow profile

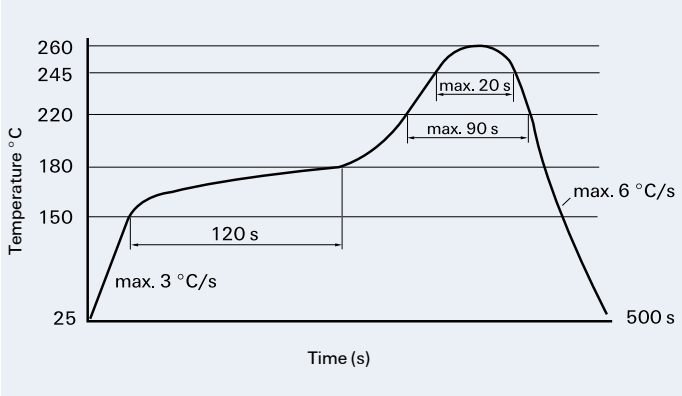

Infrared Soldering: Temperature/Time Profile
(Lead and Housing Peak Temperature)

IM Relay

Packing

Dimensions in mm

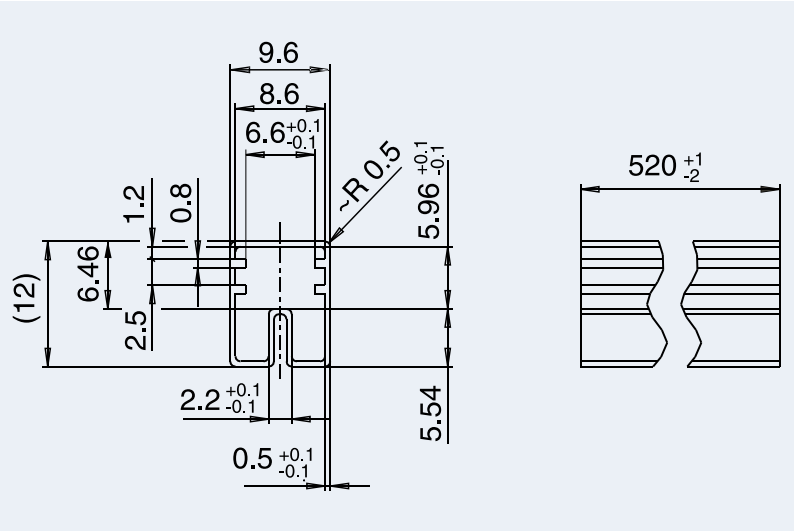

Tube for THT version
50 relays per tube
1‘000 relays per box

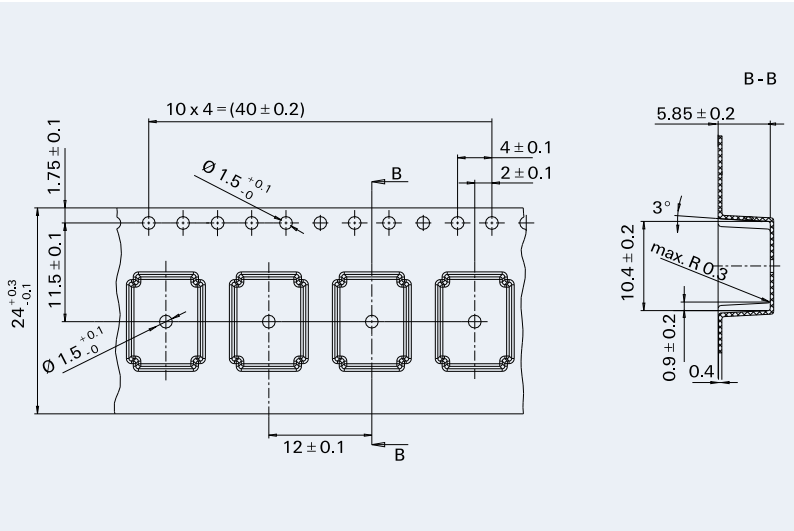

Tape and reel for SMT version
1’000 relays per reel
1’000 or 5’000 relays per box

Reel dimension

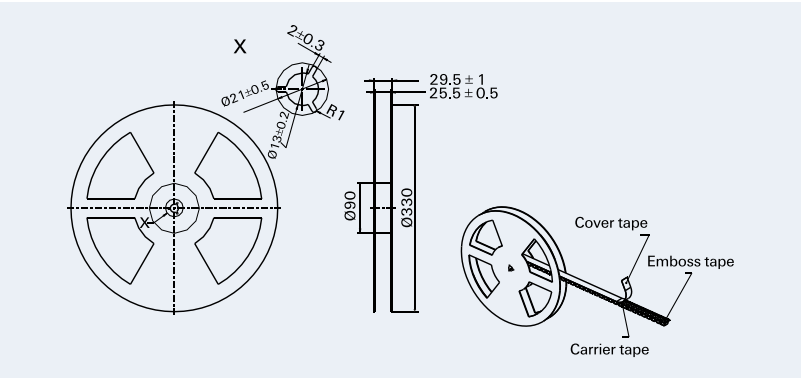

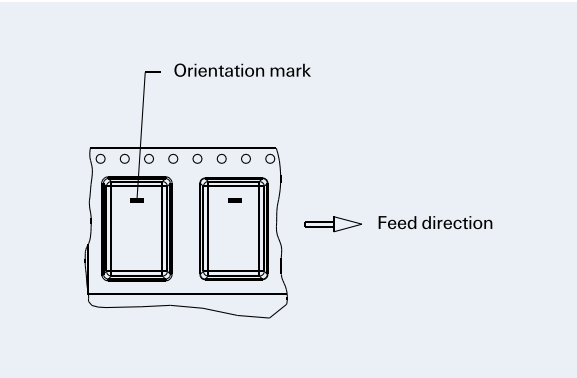

IM Relay

IM Relays

4th generation slim line – low profile polarized 2 c/o telecom signal relay with bifurcated contacts, available as non latching or latching relay with 1 coil. Nominal voltage range from 1.5 ... 24 V, coil power consumption of 50 ... 200 mW, latching relays with 1 coil 100 mW. The IM relay is available as through hole and surface mount type (J-Legs and Gull Wings) and capable to switch loads up to 60 W/62,5 VA. It is currently the only 2 A rated 4G relay on the market. Dielectric strength fulfills the Telcordia requirements according GR 1089 (2,5 kV – 2 / 10 µs) and FCC part 68 (1,5 kV – 10 / 160 µs). The IM relay is tested according CECC/IECQ and certified in accordance with IEC/EN 60950 and UL 60950.
Dimensions approx. 10 x 6 mm board space and 5.65 mm height.

P2 Relays

3rd generation polarized 2 c/o telecom relay with bifurcated contacts, available as non latching or latching relay with 1 or 2 coils. Nominal voltage range from 3 ... 24 V, coil power consumption 140 mW, latching relays with 1 coil 70 mW. The P2 Relay is available as through hole or surface mount type and capable to switch currents up to 5 A. Dielectric strength fulfills the Telcordia requirements according GR 1089 (2,5 kV – 2 / 10 µs) and FCC part 68 (1,5 kV – 10 / 160 µs). The P2 relay is tested according CECC/IECQ and certified in accordance with IEC/EN 60950 and UL 60950.
Dimensions approx. 15 x 7,5 mm board space and 10 mm height.

FX2 Relays

3rd generation polarized 2 c/o telecom relay with bifurcated contacts, available as non latching or latching relay with 1 coil. Nominal voltage range from 3 ... 48 V, coil power consumption of 80 ... 260 mW for the high sensitive version, 140... 300 mW for the standard version, latching relays with 1 coil 100 mW. The FX2 relay is available as through hole type and capable to switch loads up to 60 W/62,5 VA. Dielectric strength fulfills the Telcordia requirements according GR 1089 (2,5 kV – 2 / 10 µs) and FCC part 68 (1,5 kV – 10 / 160 µs). The FX2 relay is tested according CECC/IECQ and certified in accordance with IEC/EN 60950 and UL 60950.
Dimensions approx. 15 x 7,5 mm board space and 10,7 mm height.

FT2 / FU2 Relays

3rd generation non polarized, non latching 2 c/o telecom relay with bifurcated contacts. Nominal voltage range from 3 ... 48 V, coil power consumption 200 ... 300 mW. Most sensitive 48 V relay. Available as through hole and surface mount type. Dielectric strength fulfills the Telcordia requirements according GR 1089 (2,5 kV – 2 / 10 µs) and FCC part 68 (1,5 kV – 10 / 160 µs). The FT2/FU2 relay is tested according CECC/IECQ and certified in accordance with IEC/EN 60950 and UL 60950.
Dimensions approx. 15 x 7,5 mm board space and 10 mm height.

FP2 Relays

3rd generation polarized 2 c/o telecom relay with bifurcated contacts, available as non latching or latching relay with 1 or 2 coils. Nominal voltage range from 3 ... 48 V, coil power consumption of 80 ... 260 mW for the high sensitive version, 140... 300 mW for the standard version, latching relays with 1 coil 100 mW.. The FP2 Relay is available as through hole type and capable to switch loads up to 60 W/62,5 VA. Dielectric strength fulfills FCC part 68 (1,5 kV – 10 / 160 µs). The FP2 is tested according CECC/IECQ approved.
Dimensions approx. 14 x 9 mm board space and 5 mm height.

MT2

2nd generation non polarized, non latching 2 c/o telecom and signal relay with bifurcated contacts. Nominal voltage range from 3 … 48 V, coil power consumption 150/200/300/400 and 550 mW. Dielectric strength fulfills the requirements according FCC part 68 (1,5 kV – 10 / 160 µs).
Dimensions approx. 20 x 10 mm board space and 11 mm height.

D2n Relays

2nd generation non polarized 2 c/o relay for telecom and various other applications. Nominal voltage range from 3 ... 48 V, coil power consumption from 150 .... 500 mW. The D2n relay is capable to switch currents up to 3 A. Dielectric strength fulfills the requirements according FCC part 68 (1,5 kV – 10 / 160 µs). Dimensions approx. 20 x10 mm board space and 11 mm height.

P1 Relays

Extremely sensitive, polarized 1 c/o relay with bifurcated contacts for a wide range of applications, available as non latching or latching relay with 1 or 2 coils. Nominal voltage range from 3 ... 24 V, coil power consumption 65 mW, latching relays with 1 coil 30 mW. The P1 relay is available as through hole or surface mount type and capable to switch currents up to 1 A. Dielectric strength fulfills the requirements according FCC part 68 (1,5 kV – 10 / 160 µs). Dimensions approx. 13 x 7,6 mm board space and 7 mm height for THT or 8 mm height for SMT version.

W11 Relays

Low cost, non polarized 1 c/o relay for various applications. Nominal voltage range from 3 ... 24 V, coil power consumption 450 mW, sensitive versions 200 mW. The W11 relay is capable to switch currents up to 3 A. Dielectric strength 1000 Vrms.
Dimensions approx. 15,6 x 10,6 mm board space and 11,5 mm height.

Reed Relays

High sensitive, non polarized relay for telecom and various other applications, available with 1 n/o, 2 n/o or 1c/o contacts. Nominal voltage range from 5 ... 24 V, coil power consumption 50...280 mW for 1 n/o and 125 ... 280 mW for 2 n/o or 1 c/o versions. Reedrelays are available in DIP or SIL housing and capable to switch currents up to 0,5 A. Integrated diode and/or electrostatic shield optional. Dielectric strength 1500 Vdc. Dimensions approx. 19,3 x 7 mm board space and 5 ... 7,5 mm height for DIP or 19,8 x 5 mm board space and 7,8 mm height for SIL version.

Cradle Relays

Extremely reliable and mature relay family of 1st generation for various signal switching applications. Available as non polarized, polarized / latching and relay with AC coil. The benefit is the possibility of combining various contact sets from 1 up to 6 poles, single and bifurcated contacts, different contact materials with a coil voltage range from 1,5 Vdc to 220 Vac. Cradle relays are available as dust protected and hermetically sealed versions, with plug in or solder terminals and are capable to switch currents up to 5 A. Forcibly guided (linked) contact sets optional. Dielectric strength 500 Vrms. Dimensions from approx. 19 x 24 to 19x35 mm board space and 30 mm height.

Other Relays

We offer a variety of different relay families for maintenance and replacement purposes. These relays are up to 60 years old now, such as Card Relay SN (V23030 series), Small General Purpose Relay (V23006 series), Small Polarized Relay (V23063 ... V23067 and V23163 ... V23167 series). Accessories like sockets, hold down springs, etc. optional.

High Frequency Relays

HF3 / HF3S / HF6 series RF relays offering excellent RF characteristics in a small package. All HF series relays are suitable for SMD soldering processes. Available as non latching or latching versions with 1 or 2 coils and a nominal coil voltage range from 3 … 24 V, a coil power consumption of 140 mW or 70 mW (single coil latching types).

HF3: Low cost RF relay suitable up to 3 GHz. Impedance 50 and 75 Ohm. 50 W hot switching and 50 W RF power carry capability.
Dimensions 14.6 x 7.3 x 10.3 mm.

HF3S: High performance, high power RF relay suitable up to 3 GHz, 50 W hot switching and 150 W RF power carry capability.
Dimensions 15 x 7.6 x 10.6 mm.

HF6: High performance, high power RF relay suitable up to 6 GHz, 50 W hot switching and 50 W RF power carry capability.
Dimensions 15 x 7.6 x 10.6 mm.

Tyco Electronics Logistics AG
Werk Axicom Au
Seestrasse 295
CH-8804 Au-Wädenswil / Switzerland
Phone +41 44 782 91 11
Fax +41 44 782 90 00
E-mail: axicom@tycoelectronics.com

Tyco Electronics
Paulsternstrasse 26
D-13629 Berlin / Germany
Phone +49 30 386 38573
Fax +49 30 386 38575
E-mail: axicom@tycoelectronics.com

Tyco Electronics EC Trutnov s.r.o.
Komenského 821
CZ-541 01 Trutnov / Czech Republic
E-mail: axicom@tycoelectronics.com

AXICOM

Telecom-, Signal and RF Relays

Tyco Electronics Corporation
POB 3608,
Harrisburg, PA 17105, USA
Phone +1 800-522-6752

Tyco Electronics

Our commitment. Your advantage.