LCD TFT Module Specification

Riverdi

our pixels behave

RVT3.5A320240TNWR00

LCD TFT Datasheet

Rev.1.3

2015-02-09

ITEM	CONTENTS	UNIT
LCD Type	TFT/Transmissive/Normally white	/
Size	3.5	Inch
Viewing Direction	12:00 (without image inversion)	O' Clock
Gray Scale Inversion Direction	6:00	O' Clock
LCM (W × H × D)	76.90 × 63.90 × 4.30	mm3
Active Area (W × H)	70.08 × 52.56	mm2
Dot Pitch (W × H)	0.73 × 0.219	mm2
Number Of Dots	320 (RGB) × 240	/
Driver IC	NV3035C	/
Backlight Type	6 LEDs	/
Surface Luminance	450	cd/m2
Interface Type	24bit RGB	/
Color Depth	16.7M	/
Pixel Arrangement	RGB Vertical Stripe	/
Surface Treatment	Anti-glare	
Input Voltage	3.3	V
With/Without TSP	Resistive Touch Panel	/
Weight	41	g

Note 1: RoHS compliant

Note 2: LCM weight tolerance: ± 5%.

sales@prom-elec.com / ООО ПРОМЭЛЕКТРОНИКА

REVISION RECORD

REVNO.	REVDATE	CONTENTS	REMARKS
1.0	2014-10-16	Initial Release	
1.1	2015-01-20	Update surface luminance, update LED lifetime, add LED forward voltage information.	
1.2	2015-01-26	Update mechanical dimensions.	
1.2	2015-02-09	Update dimensions information on mechanical drawing.	

CONTENTS

REVISION RECORD 2
CONTENTS 2
1 MODULE CLASSIFICATION INFORMATION 3
2 MODULE DRAWING 4
3 ABSOLUTE MAXIMUM RATINGS 5
4 ELECTRICAL CHARACTERISTICS 5
5 BACKLIGHT CHARACTERISTICS 5
6 ELECTRO-OPTICAL CHARACTERISTICS 5
7 INTERFACE DESCRIPTION 7
8 LCD TIMING CHARACTERISTICS 8
8.1 Timing Chart 8
8.2 24 Bit RGB Mode for 320RGB x 240 9
8.3 8 Bit RGB Mode for 320RGB x 240 10
8.4 CCIR601 10
8.5 CCIR656 11
8.6 3-Wire serial communication AC Timing 11
8.7 3-wire control register list 12
8.8 Reset timing 13
8.9 Power on sequence 13
8.10 Power off sequence 14
9 TOUCH SCREEN PANEL SPECIFICATIONS 14
9.1 Electrical characteristics 14
9.2 Mechanical & Reliability characteristics 14
10 RELIABILITY TEST 15
11 LEGAL INFORMATION 16

1 MODULE CLASSIFICATION INFORMATION

RV	T	3.5	A	320240	T	N	W	R	00
1.	2.	3.	4.	5.	6.	7.	8.	9.	10.

1.	**BRAND**	**RV** – Riverdi
2.	**PRODUCT TYPE**	**T – TFT Standard** **F** – TFT Custom
3.	**DISPLAY SIZE**	**3.5 – 3.5”** **4.3** – 4.3” **5.7** – 5.7” **7.0** – 7.0”
4.	**MODEL SERIAL NO.**	**A (A-Z)**
5.	**RESOLUTION**	**320240 – 320x240 px** **480272** – 480x272 px **800480** – 800x480 px
6.	**INTERFACE**	**T – TFT LCD, RGB** **L** – TFT LCD, LVDS **C** – TFT + Controller
7.	**FRAME**	**N – No Frame** F – Mounting Frame
8.	**BACKLIGHT TYPE**	**W – LED White**
9.	**TOUCH PANEL**	N – No Touch Panel **R – Resistive Touch Panel** **C –** Capacitive Touch Panel
10.	**VERSION**	**00 (00-99)**

TFT PINOUT			
1	VLED-	28	D16
2	VLED-	29	D17
3	VLED+	30	D18
4	VLED+	31	D19
5	NC	32	D20
6	NC	33	D21
7	NC	34	D22
8	RESET	35	D23
9	SPENA	36	HSYNC
10	SPCK	37	VSYNC
11	SPDA	38	CLK
12	D00	39	NC
13	D01	40	NC
14	D02	41	VDD
15	D03	42	VDD
16	D04	43	NC
17	D05	44	NC
18	D06	45	NC
19	D07	46	NC
20	D08	47	NC
21	D09	48	XR
22	D10	49	YD
23	D11	50	XL
24	D12	51	YU
25	D13	52	DEN
26	D14	53	GND
27	D15	54	GND

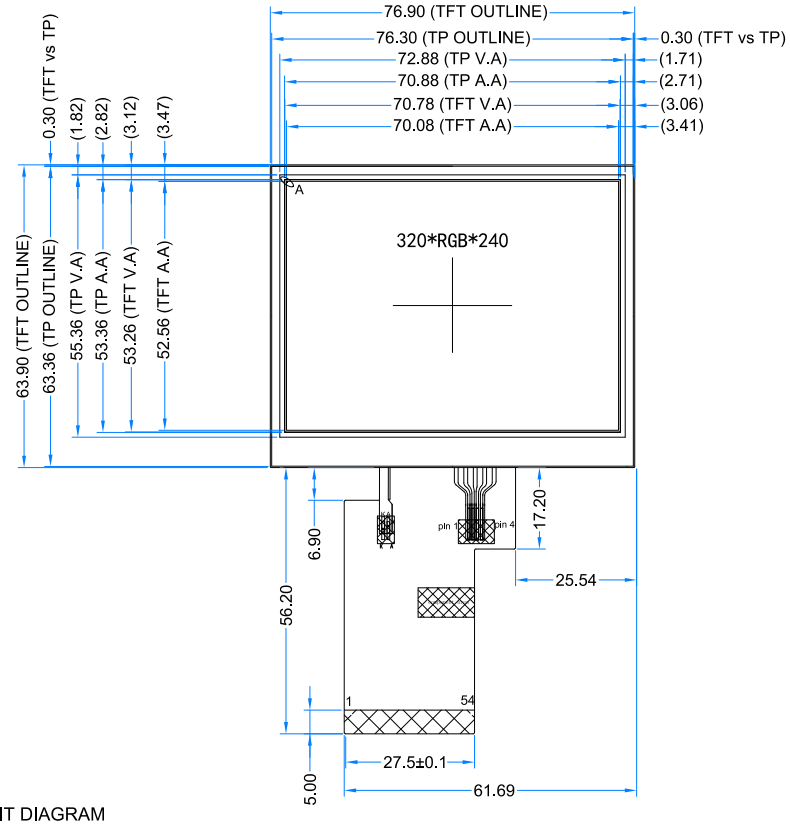

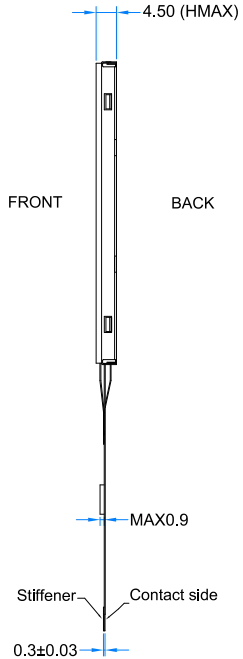

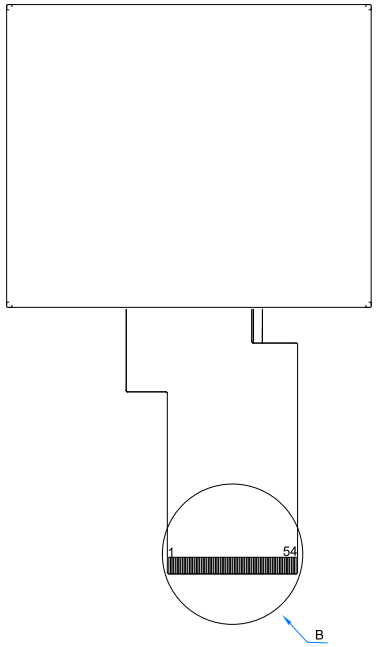

BACKLIGHT LED CIRCUIT DIAGRAM

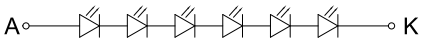

DETAIL A
SCALE 60:1

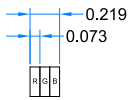

DETAIL B
SCALE 2:1

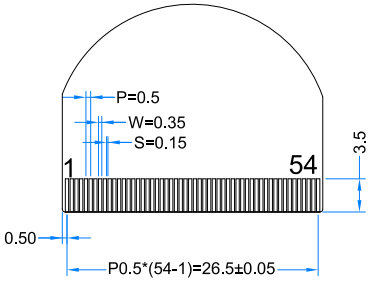

NOTES:
1. DISPLAY TYPE: TFT, TRANSMISSIVE, NORMALLY WHITE
2. OPERATION VOLTAGE: VDD=3.3V
3. VIEWING DIRECTION: 12 O'CLOCK
4. IC CONTROLLER: NV3035C
5. OPERATING TEMP.: -20°C ~ 70°C
6. STORAGE TEMP.: -30°C ~ 80°C
7. LED BACKLIGHT: 6-LED WHITE
8. SURFACE LUMINANCE 450 cd/m2
9. GENERAL TOLERANCE: ±0.2
10. RoHS COMPLIANT

CUSTOMER APVL		DATE	2015-02-06
DRAWN	SCALE	TITLE	RVT3.5A320240TNWR00
DFTG CHK	UNIT mm		
ENGR CHK		MODEL	
APPROVAL			
Riverdi our pixels behave		DWG NO Rev. 1.1	PAGE 1/1

3 ABSOLUTE MAXIMUM RATINGS

PARAMETER	SYMBOL	MIN	MAX	UNIT
Supply Voltage For Logic	VDD	-0.3	5	V
Input Voltage For Logic	VIN	VSS-0.5	VDD	V
LED forward voltage (each LED)	IF	-	25	mA
Operating Temperature	T_{OP}	-20	70	°C
Storage Temperature	T_{ST}	-30	80	°C
Humidity	RH	-	90% (Max 60°C)	RH

4 ELECTRICAL CHARACTERISTICS

PARAMETER	SYMBOL	MIN	TYP	MAX	UNIT
Power voltage	VDD	3.0	3.3	3.6	V
Input Current	IVDD	-	10	-	mA
Input Voltage ' H ' level	V_{IH}	0.8VDD	-	VDDD	V
Input Voltage ' L ' level	V_{IL}	0	-	0.2VDD	V

5 BACKLIGHT CHARACTERISTICS

ITEM	SYMBOL	MIN	TYP	MAX	UNIT
Voltage for LED backlight	V_l	9.0	19.2	20.4	V
Current for LED backlight	I_l	-	20	25	mA
LED Life Time	-	40000	50000	-	Hrs

Note: The LED life time is defined as the module brightness decrease to 50% original brightness at Ta=25°C.

6 ELECTRO-OPTICAL CHARACTERISTICS

ITEM		SYMBOL	CONDITION	MIN	TYP	MAX	UNIT	REMARK	NOTE
Response Time		Tr+Tf	θ=0° Ø=0° Ta=25	-	25	35	ms	Figure 1	4
Contrast Ratio		Cr		-	350	-	---	Figure 2	1
Luminance Uniformity		δ WHITE		75	80	-	%	Figure 2	3
Surface Luminance		Lv		-	450	-	cd/m²	Figure 2	2
Viewing Angle Range		θ	Ø = 90°	30	40	-	deg	Figure 3	6
			Ø = 270°	50	60	-	deg	Figure 3	
			Ø = 0°	50	60	-	deg	Figure 3	
			Ø = 180°	50	60	-	deg	Figure 3	
CIE (x, y) Chromaticity	Red	x	θ=0° Ø=0° Ta=25	0.574	0.624	0.674	Figure 2		5
		y		0.318	0.368	0.418			
	Green	x		0.300	0.350	0.400			
		y		0.500	0.550	0.600			
	Blue	x		0.093	0.143	0.193			
		y		0.069	0.119	0.169			
	White	x		0.260	0.310	0.360			
		y		0.283	0.333	0.383			

Note 1. Contrast Ratio(CR) is defined mathematically as below, for more information see Figure 1.

$$\text{Contrast Ratio} = \frac{\text{Average Surface Luminance with all white pixels (P1, P2, P3, P4, P5)}}{\text{Average Surface Luminance with all black pixels (P1, P2, P3, P4, P5)}}$$

Note 2. Surface luminance is the LCD surface from the surface with all pixels displaying white. For more information see Figure 2.

Lv = Average Surface Luminance with all white pixels (P1, P2, P3, P4, P5)

Note 3. The uniformity in surface luminance δ WHITE is determined by measuring luminance at each test position 1 through 5, and then dividing the maximum luminance of 5 points luminance by minimum luminance of 5 points luminance. For more information see Figure 2.

$$\delta\ \text{WHITE} = \frac{\text{Minimum Surface Luminance with all white pixels (P1, P2, P3, P4, P5)}}{\text{Maximum Surface Luminance with all white pixels (P1, P2, P3, P4, P5)}}$$

Note 4. Response time is the time required for the display to transition from white to black (Rise Time, Tr) and from black to white (Decay Time, Tf). For additional information see FIG 1. The test equipment is Autronic-Melchers's ConoScope series.

Note 5. CIE (x, y) chromaticity, the x, y value is determined by measuring luminance at each test position 1 through 5, and then make average value.

Note 6. Viewing angle is the angle at which the contrast ratio is greater than 2. For TFT module the contrast ratio is greater than 10. The angles are determined for the horizontal or x axis and the vertical or y axis with respect to the z axis which is normal to the LCD surface. For more information see Figure 3.

Note 7. For viewing angle and response time testing, the testing data is based on Autronic-Melchers's ConoScope series. Instruments for Contrast Ratio, Surface Luminance, Luminance Uniformity, CIE the test data is based on TOPCON's BM-5 photo detector.

Figure 1. The definition of response time

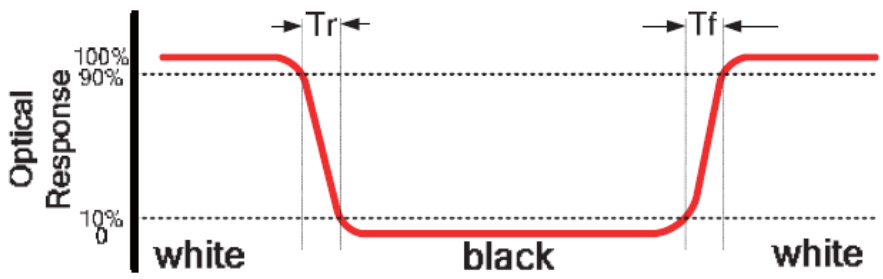

Figure 2. Measuring method for Contrast ratio, surface liminance, Liminance uniformity, CIE (x,y) chromaticity

A : 5 mm
B : 5 mm
H,V : Active Area
Light spot size ∅=5mm, 500mm distance from the LCD surface to detector lens
measurement instrument is TOPCON's luminance meter BM-5

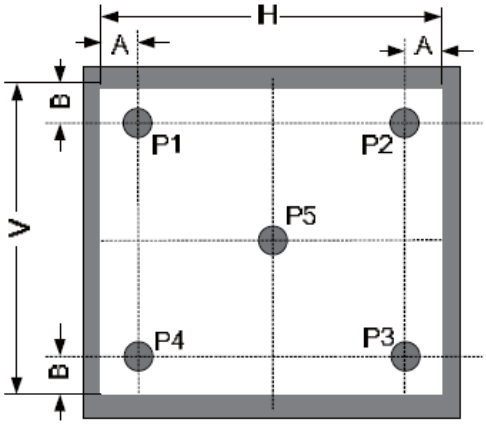

Figure 3.The definiton of viewing angle

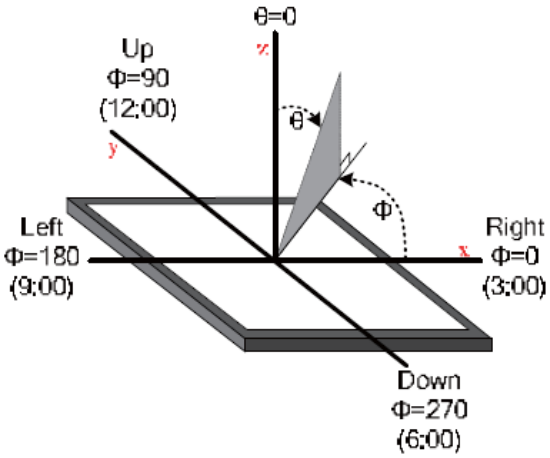

7 INTERFACE DESCRIPTION

PIN NO.	SYMBOL	DESCRIPTION	REMARK
1	VLED-	Cathode Of LED Backlight	
2	VLED-	Cathode Of LED Backlight	
3	VLED+	Anode Of LED Backlight	
4	VLED+	Anode Of LED Backlight	
5	NC	No Connect	
6	NC	No Connect	
7	NC	No Connect	
8	RESET	Reset	
9	SPENA	Serial Port Data Enable Signal	
10	SPCK	SPI Serial Clock	
11	SPDA	SPI Serial Data Input/Output	
12-35	D00-D23	Data 00 – Data 23	Note 1
36	HSYNC	Horizontal Synchronous Signal	
37	VSYNC	Vertical Synchronous Signal	
38	CLK	Data Clock	
39	NC	No Connect	
40	NC	No Connect	
41	VDD	Power Supply (3.3V)	
42	VDD	Power Supply (3.3V)	

43	NC	No Connect	
44	NC	No Connect	
45	NC	No Connect	
46	NC	No Connect	
47	NC	No Connect	
48	XR	Touch Right Electrode	
49	YD	Touch Down Electrode	
50	XL	Touch Left Electrode	
51	YU	Touch Up Electrode	
52	DEN	Data Enabling Signal	
53	GND	Ground	
54	GND	Ground	

Note1: D00-D23 (pins 12-35)

MODE	D(23:16)	D(15:08)	D(07:00)	HSYNC	VSYNC
ITU-R BT 656	D(23:16)	GND	GND	NC	NC
ITU-R BT 601	D(23:16)	GND	GND	HSYNC	VSYNC
8 Bit RGB	D(23:16)	GND	GND	HSYNC	VSYNC
24 Bit RGB	R(7:0)	G(7:0)	B(7:0)	HSYNC	VSYNC

8 LCD TIMING CHARACTERISTICS

8.1 Timing Chart

Timing parameter (VDD=3.3V, GND=0V, Ta=25˚C)

PARAMETER	SYMBOL	MIN	TYP	MAX	UNIT	CONDITION
CLK Clock Time	T_{clk}	1/Max(F_{CLK})	-	1/Min(F_{CLK})	ns	-
CLK Pulse Duty	T_{chw}	40	50	60	%	T_{CLK}
HSYNC to CLK	T_{hc}	-	-	1	CLK	-
HSYNC Width	T_{hwh}	1	-	-	CLK	-
VSYNC Width	T_{vwh}	1	-	-	ns	-
HSYNC Period Time	T_h	60	63.56	67	ns	-
VSYNC Set-up Time	T_{vst}	12	-	-	ns	-
VSYNC Hold Time	T_{vhd}	12	-	-	ns	-
HSYNC Setup Time	T_{hst}	12	-	-	ns	-
HSYNC Hold Time	T_{hhd}	12	-	-	ns	-
Data Set-up Time	T_{dsu}	12	-	-	ns	D00~D23 to CLK
Data Hold Time	T_{dhd}	12	-	-	ns	D00~D23 to CLK
DEN Set-up Time	T_{esu}	12	-	-	ns	DEN to CLK

Note: Each CLK Frequency of 24 Bit RGB Mode, 8 Bit RGB Mode, CCIR601 and CCIR656 are different.

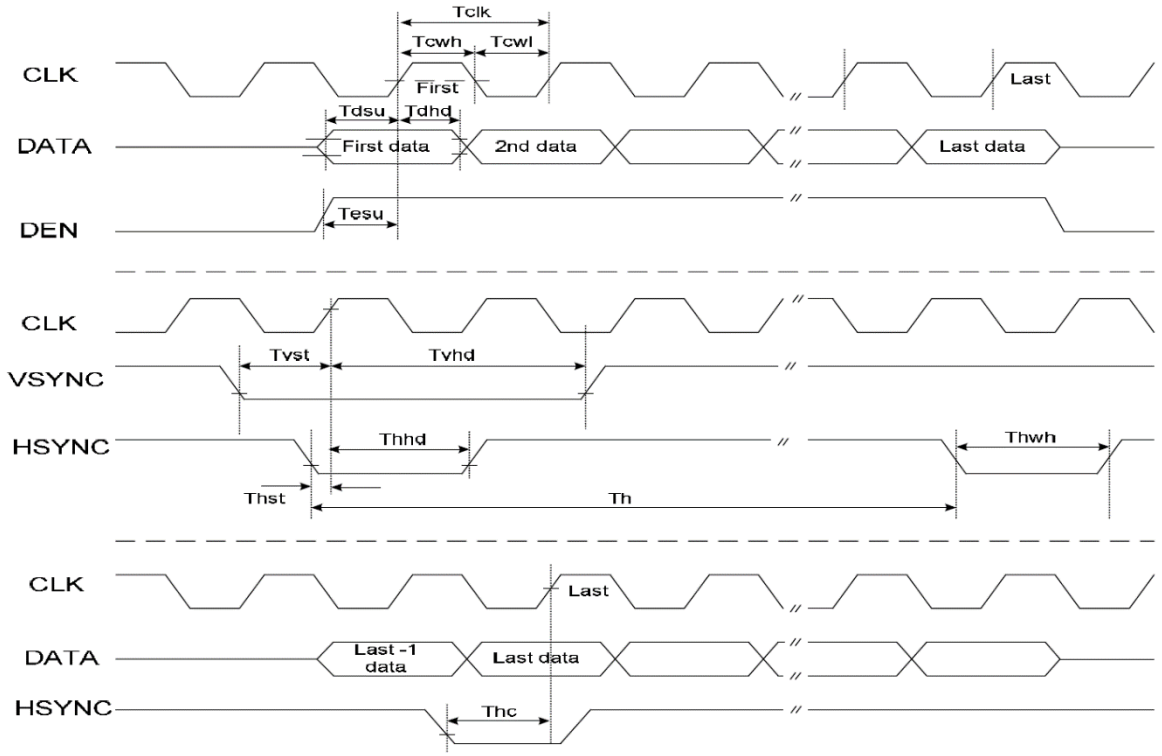

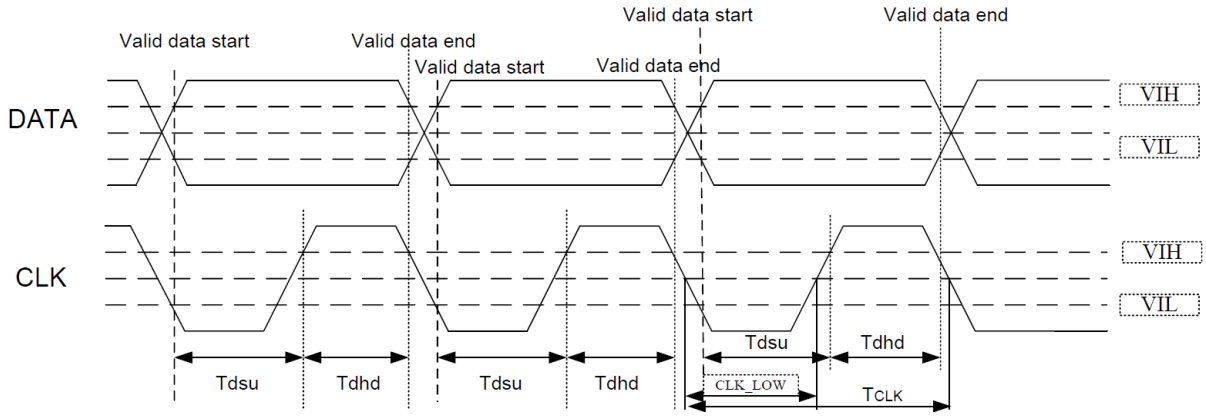

8.2 24 Bit RGB Mode for 320RGB x 240

PARAMETER	SYMBOL	MIN	TYP	MAX	UNIT	CONDITION
CLK Frequency	F_{clk}	6.1	6.4	8.0	MHz	VDD=3.0V~3.6V
CLK Cycle Time	T_{clk}	125	156	164	ns	-
CLK Pulse Duty	T_{cwh}	40	50	60	%	-
Time that HSYNC to 1st Data Input (NTSC)	T_{hs}	40	70	255	CLK	DDLY=70 Offset=0(fixed)

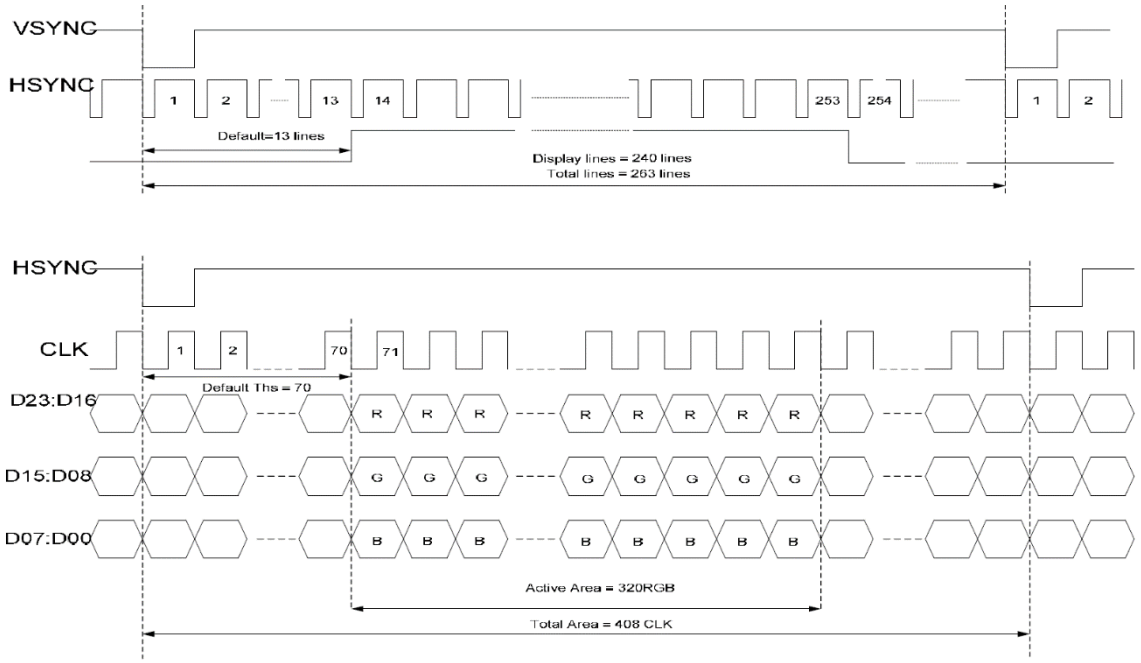

8.3 8 Bit RGB Mode for 320RGB x 240

PARAMETER	SYMBOL	MIN	TYP	MAX	UNIT	CONDITION
CLK Frequency	F_{clk}	-	27	30	MHz	VDD=3.0V~3.6V
CLK Cycle Time	T_{clk}	-	37	-	ns	-
Time that HSYNC to 1st Data Input (NTSC)	T_{hs}	35	70	255	CLK	DDLY=70 Offset=0(fixed)

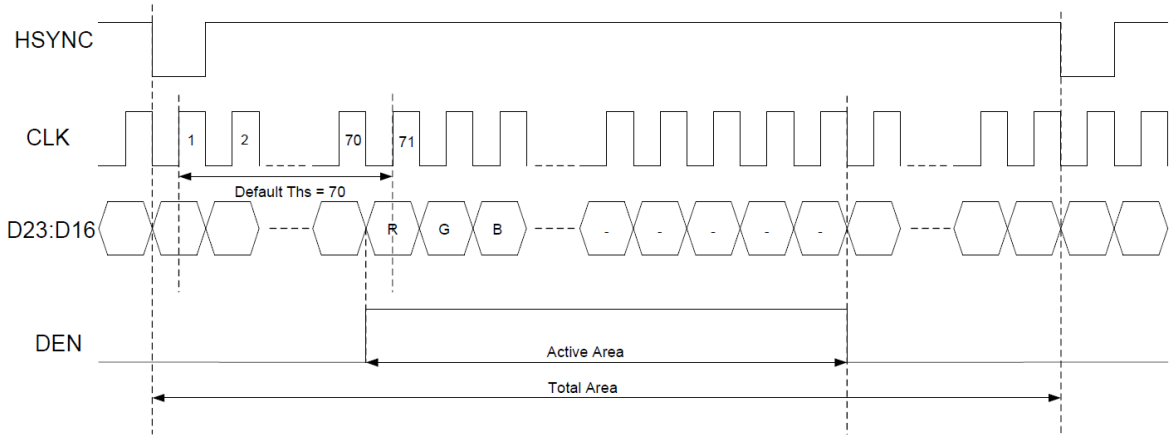

8.4 CCIR601

PARAMETER	SYMBOL	MIN	TYP	MAX	UNIT	CONDITION
CLK Frequency	F_{clk}	-	24.54/27	30	MHz	VDD=3.0V~3.6V
CLK Cycle Time	T_{clk}	-	40/37	-	ns	-
Time From HSYNC to 1st Data Input (PAL)	T_{hs}	128	264	-	CLK	DDLY=136 Offset=128(fixed)
Time From HSYNC to 1st Data Input (NTSC)	T_{hs}	128	244	-	CLK	DDLY=116 Offset=128(fixed)

CLKIN frequency:
24.54MHz for 1280-cycle mode
27MHz for 1440-cycle mode

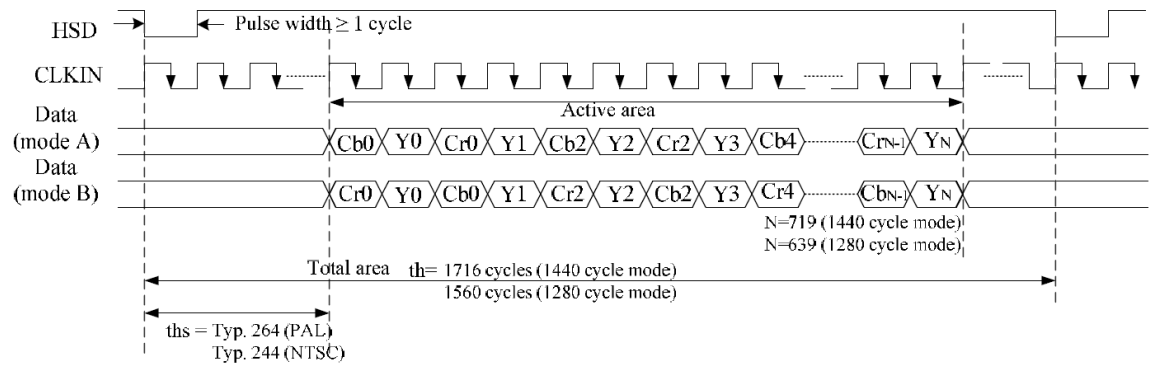

8.5 CCIR656

PARAMETER	SYMBOL	MIN	TYP	MAX	UNIT	CONDITION
CLK Frequency	F_{clk}	-	27	30	MHz	VDD=3.0V~3.6V
CLK Cycle Time	T_{clk}	-	37	-	ns	-
Time From EVA to 1st Data Input (PAL)	T_{hs}	128	288	-	CLK	DDLY=152 Offset=128(fixed)
Time From EVA to 1st Data Input (NTSC)	T_{hs}	128	276	-	CLK	DDLY=140 Offset=128(fixed)

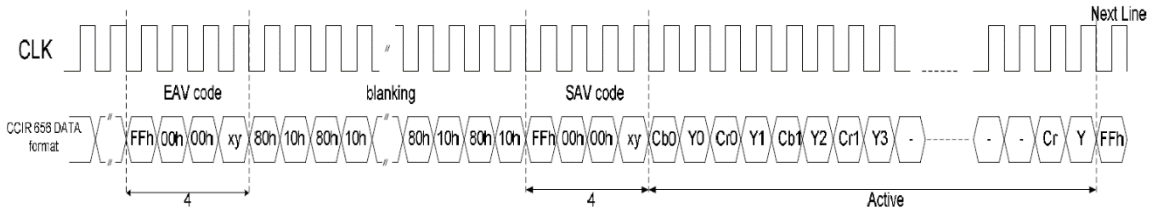

8.6 3-Wire serial communication AC Timing

PARAMETER	SYMBOL	MIN	TYP	MAX	UNIT
Serial Clock	T_{SPCK}	320	-	-	ns
SPCK Pulse Duty	T_{scdut}	40	50	60	%
Serial Data Setup Time	T_{isu}	120	-	-	ns
Serial Data Hold Time	T_{ihd}	120	-	-	ns
Serial Clock High/Low	T_{ssw}	120	-	-	ns
Chip Select Distinguish	T_{cd}	1	-	-	ns

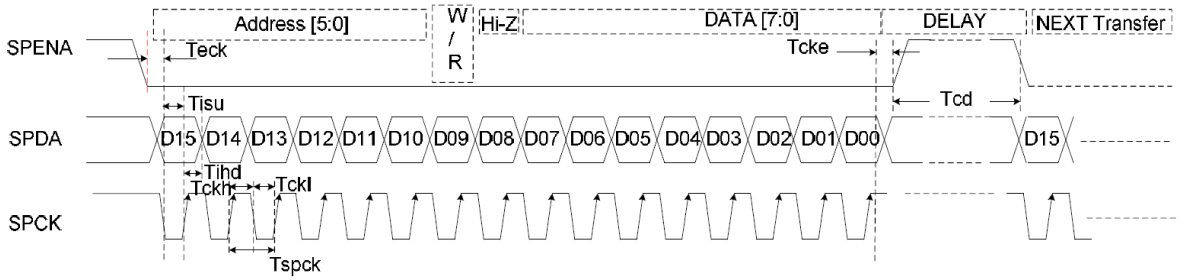

Note: DDLY Description (Ths=DDLY+Offset)

R04: Source Timing Delay Control Register

BIT	NAME	INITIAL	DESCRIPTION
Bit[7:0]	DDLY[7:0]	46h	Select the HSD signal to 1st input data delay timing Under CCIR601 mode, Ths=DDLY[7:0] + 128, (Unit=CLKIN) Under CCIR656 mode, Ths=DDLY[7:0] +136, (Unit = CLIKIN) The register value will be update to the different mode, such as 24RGB, 8RGB, CCIR mode Read the section of "24RGB, 8RGB, CCIR mode" for detail

8.7 3-wire control register list

3-WIRE REGISTERS		REGISTER DESCRIPTION		
D[15:10]	**Name**	**Init**	**R/W**	**Function Description**
000000b	R01	03h	R/W	System Control Register
000001b	R02	00h	R/W	Timing Controller Function Register
000010b	R03	03h	R/W	Operation Control Register
000011b	R04	CCh	R/W	Input Data Format Control Register
000100b	R05	46h	R/W	Source Timing Delay Control Register
000101b	R06	0Dh	R/W	Gate Timing Delay Control Register
000111b	R07	00h	R/W	Internal Function Control Register
001000b	R08	08h	R/W	RGB Contrast Control Register
001001b	R09	40h	R/W	RGB Brightness Control Register
001011b	R0B	88h	R/W	R/B Sub-Contrast Control Register
001100b	R0C	20h	R/W	R Sub-Brightness Control Register
001101b	R0D	20h	R/W	B Sub-Brightness Control Register
001110b	R0E	2Bh	R/W	VCOMDC Level Control Register
001111b	R0F	A6h	R/W	VCOMAC Level Control Register
010000b	R10	04h	R/W	VGAM2 Level Control Register
010001b	R11	24h	R/W	VGAM3/4 Level Control Register
010010b	R12	24h	R/W	VGAM5/6 Level Control Register
011101b	R1D	00h	R/W	OTP Operation Control Register
011110b	R1E	00h	R/W	OTP Operation Control Register
011111b	R1F	00h	R/W	OTP Operation Control Register

Note :

R03: C4h:CCIR656 Mode

C2h: CCIR601 Mode

C8h: 8 bit RGB Mode(HV Mode)

C9h: 8 bit RGB Mode(DEN Mode)

CCh(default): 24 bit RGB Mode (HV mode)

CDh: 24 bit RGB Mode (DEN mode)

R0F: A4h(default): VGH=15V, VGL=-10V. 24h(recommend): VGH=15V,VGL=-7V.

8.8 Reset timing

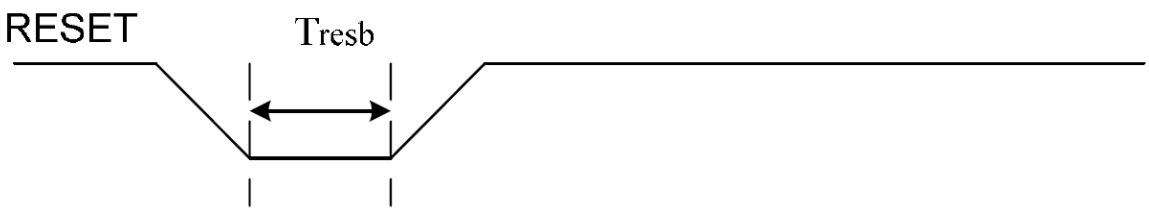

PARAMETER	MIN	TYP	MAX	UNIT	CONDITIONS
T_{resb}	40	-	-	us	VDD=3.3V

8.9 Power on sequence

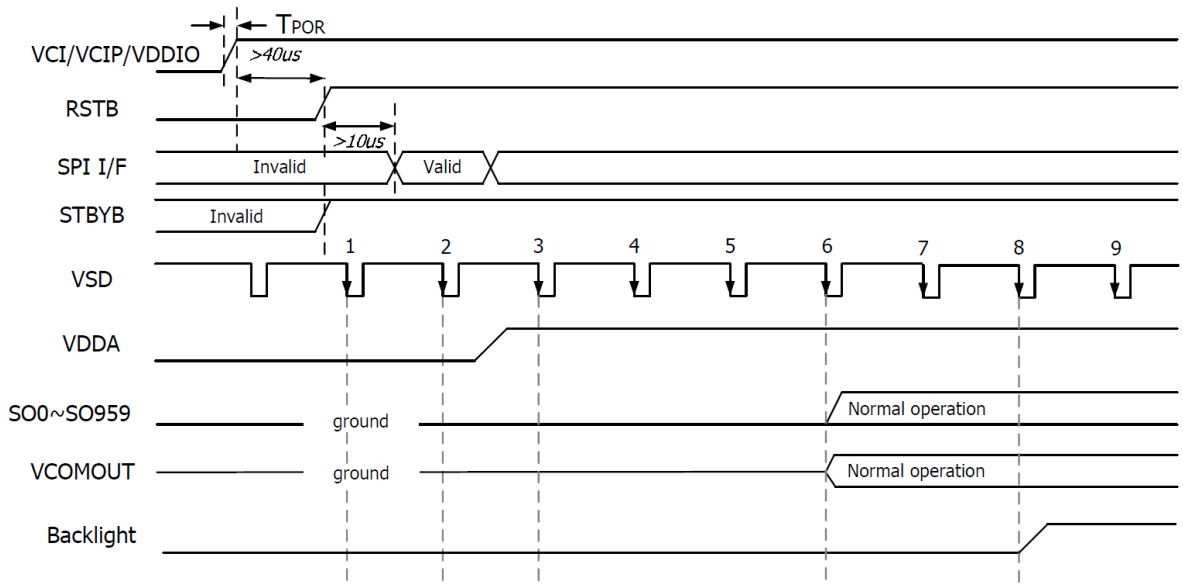

8.10 Power off sequence

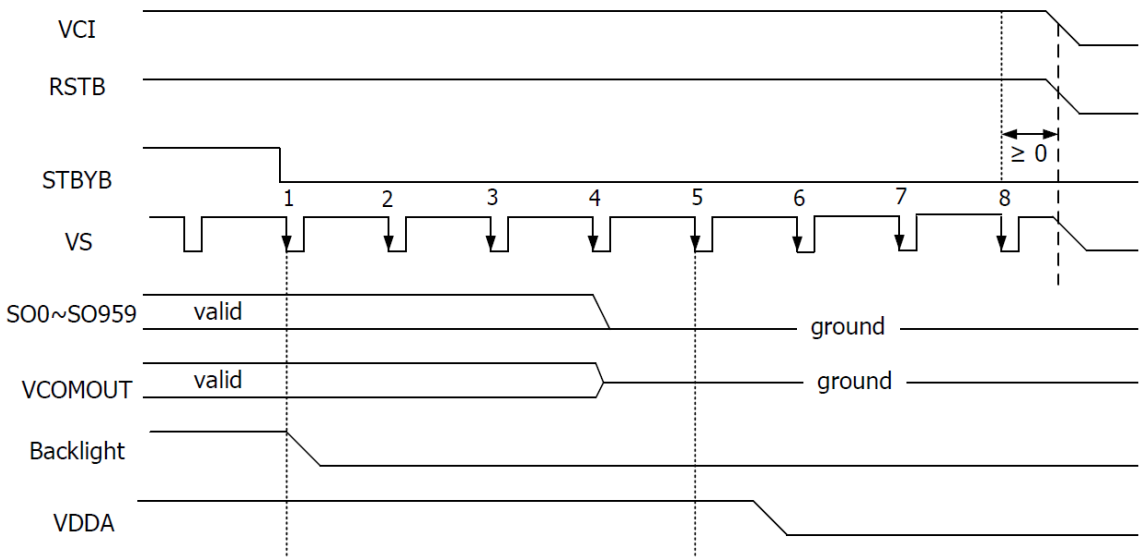

9 TOUCH SCREEN PANEL SPECIFICATIONS

9.1 Electrical characteristics

ITEM	VALUE			UNIT	REMARK
	Min.	Typ.	Max.		
Linearity	-	-	1.5	%	Analog X and Y directions
Terminal Resistance	200	-	900	Ω	X
	100	-	600	Ω	Y
Insulation Resistance	20	-	-	MΩ	DC 25V
Voltage	-	-	10	V	DC
Chattering	-	-	10	ms	100kΩ pull-up
Transparency	78	-	-	%	

Note: Avoid operating with hard or sharp material such as a ball point pen or a mechanical pencil except a polyacetal pen (tip R0.8mm or less) or a finger.

9.2 Mechanical & Reliability characteristics

ITEM	VALUE			UNIT	REMARK
	Min.	Typ.	Max.		
Activation Force	20	-	100	gf	Note 1
Durability - Surface Scratching	Write 100,000	-	-	characters	Note 2
Durability-Surface Pitting	1,000,000	-	-	touches	Note 3
Surface Hardness	3	-	-	H	JIS K5400

10 RELIABILITY TEST

NO.	TEST ITEM	TEST CONDITION	INSPECTION AFTER TEST
1	High Temperature Storage	80±2°C/240 hours	Inspection after 2~4 hours storage at room temperature, the sample shall be free from defects: 1. Air bubble in the LCD 2. Seal leak 3. Non-display 4. Missing segments 5. Glass crack 6. Current I_{dd} is twice higher than initial value 7. The surface shall be free from damage 8. Linearity must be no more than 1.5% by the linearity tester 9. The Electric characteristics requirements shall be satisfied
2	Low Temperature Storage	-30±2°C/240 hours	
3	High Temperature Operating	70±2°C/240 hours	
4	Low Temperature Operating	-20±2°C/240 hours	
5	Temperature Cycle	-30±2°C~25~70±2°C × 30 cycles	
6	Damp Proof Test	60°C ±5°C × 90%RH/160 hours	
7	Vibration Test	Frequency 10Hz~55Hz Stroke: 1.5mm Sweep: 10Hz~55Hz~10Hz 2 hours For each direction of X, Y, Z (6 hours for total)	
8	Mechanical Shock	60G 6ms, ± X, ± Y, ± Z 3 times for each direction	
9	Packing Drop Test	Height: 80 cm 1 corner, 3 edges, 6 surfaces	
10	Package Vibration Test	Random vibration: $0.015G^2$/Hz from 5-200Hz -6dB/Octave from 200-500Hz 2 hours for each direction of X, Y, Z (6 hours for total)	
11	Electrostatic Discharge	Air: ±8KV 150pF/330Ω 5 times Contact: ±4KV 150pF/330Ω 5 times	
12	Hitting Test	1,000,000 times in the same point Hitting pad: tip R3.75mm, Silicone rubber, Hardness: 40deg. Load: 2.45N Hitting speed: Twice/sec Electric load: none Test area should be at 1.8mm inside of insulation.	
13	Pen Sliding Durability Test	100,000 times minimum Hitting pad: tip R0.8mm plastic pen Load: 1.47N Sliding speed: 60 mm/sec Electric load: none Test area should be at 1.8mm inside of insulation.	

Remark:
1. The test samples should be applied to only one test item.
2. Sample size for each test item is 5~10pcs.
3. For Damp Proof Test, Pure water(Resistance 10MΩ) should be used.
4. In case of malfunction defect caused by ESD damage, if it would be recovered to normal state after resetting, it would be judge as a good part.

5. EL evaluation should be excepted from reliability test with humidity and temperature: Some defects such as black spot/blemish can happen by natural chemical reaction with humidity and Fluorescence EL has.
6. Failure Judgment Criterion: Basic Specification, Electrical Characteristic, Mechanical Characteristic, Optical Characteristic.

11 LEGAL INFORMATION

Riverdi makes no warranty, either expressed or implied with respect to any product, and specifically disclaims all other warranties, including, without limitation, warranties for merchantability, non-infringement and fitness for any particular purpose. Information about device are the property of Riverdi and may be the subject of patents pending or granted. It is not allowed to copy or disclosed this document without prior written permission. Riverdi endeavors to ensure that the all contained information in this document are correct but does not accept liability for any error or omission. Riverdi products are in developing process and published information may be not up to date. Riverdi reserves the right to update and makes changes to Specifications or written material without prior notice at any time. It is important to check the current position with Riverdi. All trademarks belong to their respective owners and are recognized and acknowledged.

Riverdi makes no warranty, either expressed or implied with respect to any product, and specifically disclaims all other warranties, including, without limitation, warranties for merchantability, non-infringement and fitness for any particular purpose. Information about device applications contained in this document may be superseded by updates. It is your responsibility to ensure that your application meets with your specifications.

Images and graphics used in this document are only for illustrative the purpose. All images and graphics are possible to be displayed on the range products of Riverdi, however the quality may vary. Riverdi is no liable to the buyer or to any third part for any indirect, incidental, special, consequential, punitive or exemplary damages (including without limitation lost profits, lost savings, or loss of business opportunity) relating to any product, service provided or to be provided by Riverdi, or the use or inability to use the same, even if Riverdi has been advised of the possibility of such damages.

Riverdi products are not fault tolerant nor designed, manufactured or intended for use or resale as on line control equipment in hazardous environments requiring fail – safe performance, such as in the operation of nuclear facilities, aircraft navigation or communication systems, air traffic control, direct life support machines or weapons systems in which the failure of the product could lead directly to death, personal injury or severe physical or environmental damage (‘High Risk Activities’). Riverdi and its suppliers specifically disclaim any expressed or implied warranty of fitness for High Risk Activities. Using Riverdi products and devices in 'High Risk Activities' and in any other application is entirely at the buyer’s risk, and the buyer agrees to defend, indemnify and hold harmless Riverdi from any and all damages, claims or expenses resulting from such use. No licenses are conveyed, implicitly or otherwise, under any Riverdi intellectual property rights.

Riverdi
our pixels behave