Smart High-Side Power Switch
Two Channels: 2 x 140mΩ
Status Feedback

Product Summary

Operating Voltage	V_{bb}	5.5...40V	
	Active channels	one	two parallel
On-state Resistance	R_{ON}	140mΩ	70mΩ
Nominal load current	$I_{L(NOM)}$	2.4A	3.9A
Current limitation	$I_{L(SCr)}$	6.5A	6.5A

Package

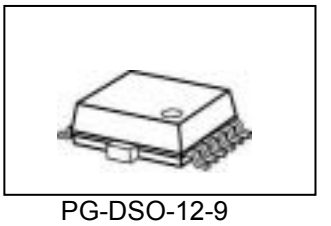

PG-DSO-12-9

General Description

- N channel vertical power MOSFET with charge pump, ground referenced CMOS compatible input and diagnostic feedback, monolithically integrated in Smart SIPMOS® technology.
- Providing embedded protective functions

Applications

- µC compatible high-side power switch with diagnostic feedback for 12V and 24V grounded loads
- All types of resistive, inductive and capacitve loads
- Most suitable for loads with high inrush currents, so as lamps
- Replaces electromechanical relays, fuses and discrete circuits

Basic Functions

- Very low standby current
- CMOS compatible input
- Improved electromagnetic compatibility (EMC)
- Fast demagnetization of inductive loads
- Stable behaviour at undervoltage
- Wide operating voltage range
- Logic ground independent from load ground

Protection Functions

- Short circuit protection
- Overload protection
- Current limitation
- Thermal shutdown
- Overvoltage protection (including load dump) with external resistor
- Reverse battery protection with external resistor
- Loss of ground and loss of V_{bb} protection
- Electrostatic discharge protection (ESD)

Block Diagram

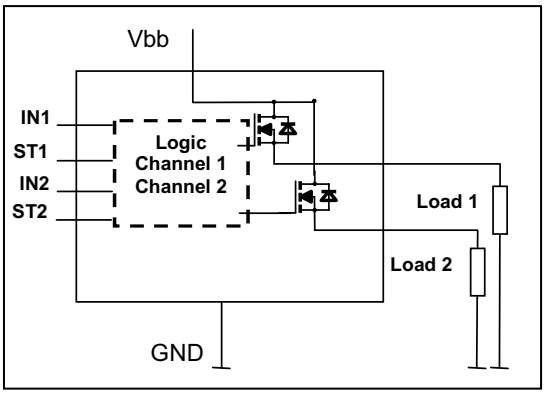

Diagnostic Function

- Diagnostic feedback with open drain output
- Open load detection in OFF-state
- Feedback of thermal shutdown in ON-state

- AEC qualified
- Green product (RoHS compliant)

sales@prom-elec.com / ООО ПРОМЭЛЕКТРОНИКА

Functional diagram

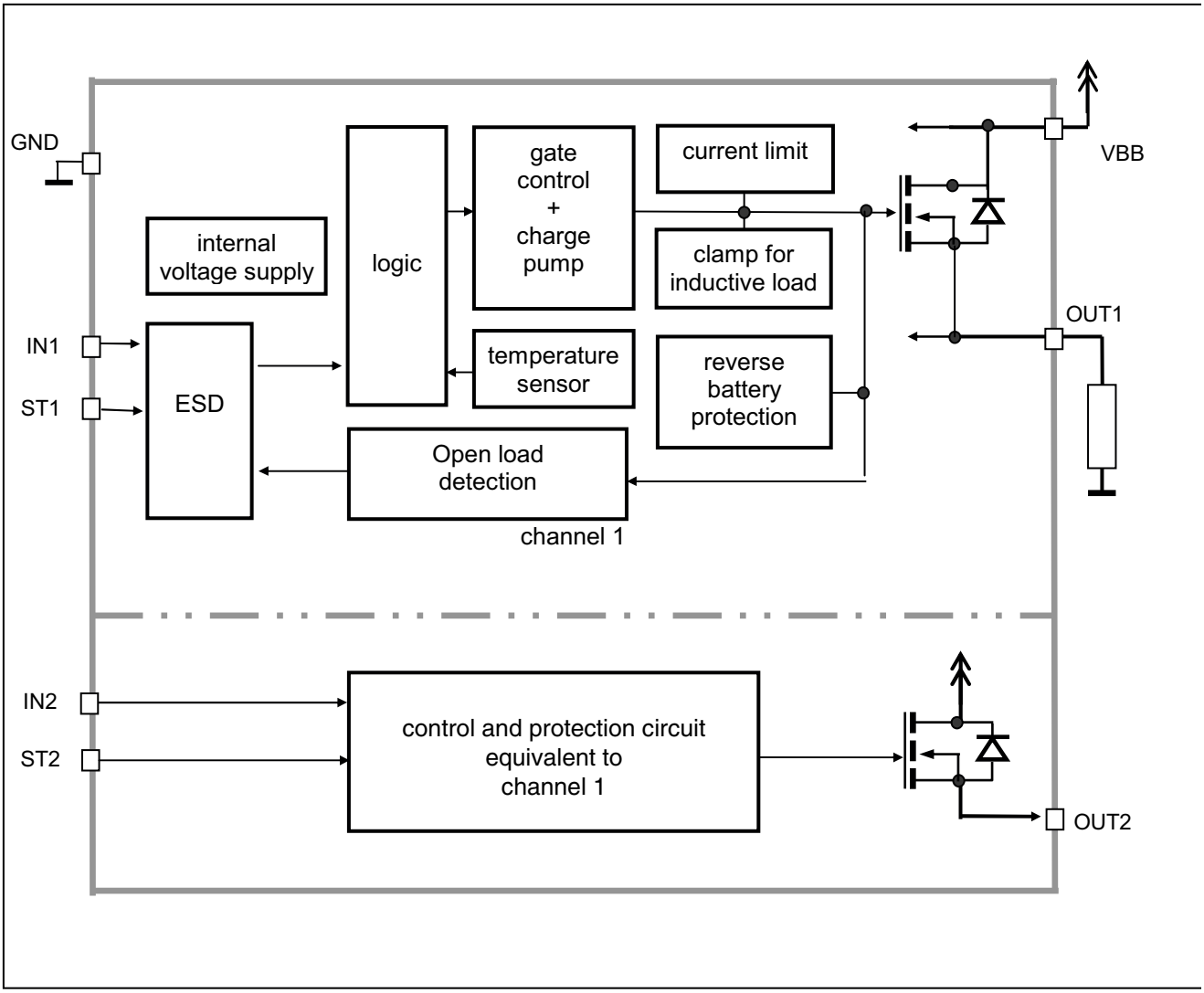

Pin Definitions and Functions

Pin	Symbol	Function
1	GND	**Ground** of chip
2	IN1	**Input 1,2** activates channel 1,2 in case of logic high signal
4	IN2	
3	ST1	**Diagnostic feedback 1 & 2** of channel 1,2 open drain, low on failure
5	ST2	
6,12, heat slug	V_{bb}	**Positive power supply voltage**. Design the wiring for the simultaneous max. short circuit currents from channel 1 to 2 and also for low thermal resistance
7,9,11	NC	**Not Connected**
8	OUT2	**Output 1,2** protected high-side power output of channel 1 and 2. Design the wiring for the max. short circuit current
10	OUT1	

Pin configuration

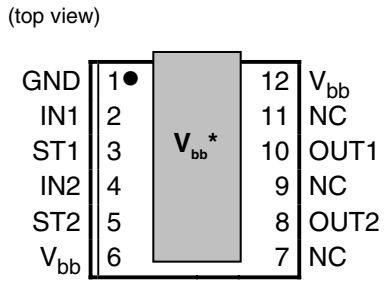

* heat slug

Parameter	Symbol	Values	Unit
Supply voltage (overvoltage protection see page 6)	V_{bb}	43	V
Supply voltage for full short circuit protection $T_{j,start}$ = -40 ...+150°C	V_{bb}	36	V
Load current (Short-circuit current, see page 6)	I_L	self-limited	A
Load dump protection[1] $V_{LoadDump} = V_A + V_s$, V_A = 13.5 V R_I[2] = 2 Ω, t_d = 400 ms; IN = low or high, each channel loaded with R_L = 13.5 Ω,	$V_{Load\,dump}$[3]	60	V
Operating temperature range Storage temperature range	T_j T_{stg}	-40 ...+150 -55 ...+150	°C
Power dissipation (DC)[4] T_a = 25°C: (all channels active) T_a = 85°C:	P_{tot}	3,05 1,59	W
Maximal switchable inductance, single pulse V_{bb} = 12V, $T_{j,start}$ = 150°C[4], see diagrams on page 10 I_L = 2.9 A, E_{AS} = 84 mJ, 0 Ω one channel: I_L = 5.7 A, E_{AS} = 168 mJ, 0 Ω two parallel channels:	Z_L	14 7.6	mH
Electrostatic discharge capability (ESD) IN: (Human Body Model) ST: out to all other pins shorted: acc. MIL-STD883D, method 3015.7 and ESD assn. std. S5.1-1993 R=1.5kΩ; C=100pF	V_{ESD}	1.0 4.0 8.0	kV
Input voltage (DC) see internal circuit diagram page 9	V_{IN}	-10 ... +16	V
Current through input pin (DC)	I_{IN}	±0.3	mA
Pulsed current through input pin[5]	I_{INp}	±5.0	
Current through status pin (DC)	I_{ST}	±5.0	

1) Supply voltages higher than $V_{bb(AZ)}$ require an external current limit for the GND and status pins (a 150Ω resistor for the GND connection is recommended.

2) R_I = internal resistance of the load dump test pulse generator

3) $V_{Load\ dump}$ is setup without the DUT connected to the generator per ISO 7637-1 and DIN 40839

4) Device on 50mm*50mm*1.5mm epoxy PCB FR4 with 6cm² (one layer, 70µm thick) copper area for V_{bb} connection. PCB is vertical without blown air. See page 14

5) only for testing

Parameter and Conditions	Symbol	Values			Unit
		min	typ	max	
Thermal resistance					
junction - Case[6] each channel:	R_{thjC}	--	--	5	K/W
junction – ambient[6]	R_{thja}	--	--	--	
@ 6 cm² cooling area one channel active:		--	45	--	
all channels active:		--	40	--	

Electrical Characteristics

Parameter and Conditions, each of the four channels at T_j = -40...+150°C, V_{bb} = 12 V unless otherwise specified	Symbol	Values			Unit
		min	typ	max	
Load Switching Capabilities and Characteristics					
On-state resistance (V_{bb} to OUT); I_L = 2 A					
each channel, T_j = 25°C:	R_{ON}	--	110	140	mΩ
T_j = 150°C:		--	210	280	
two parallel channels, T_j = 25°C:		--	55	70	
see diagram, page 11					
Nominal load current one channel active:	$I_{L(NOM)}$	1.8	2.4	--	A
two parallel channels active:		3.4	3.9		
Device on PCB[6], T_a = 85°C, $T_j \leq$ 150°C					
Output current while GND disconnected or pulled up[7]; Vbb = 32 V, V_{IN} = 0, see diagram page 9	$I_{L(GNDhigh)}$	--	--	2	mA
Turn-on time[8] IN ⎍ to 90% V_{OUT}:	t_{on}	--	100	250	µs
Turn-off time IN ⎏ to 10% V_{OUT}:	t_{off}	--	100	270	
R_L = 12 Ω					
Slew rate on[8] 10 to 30% V_{OUT}, R_L = 12 Ω:	dV/dt_{on}	0.2	--	1.0	V/µs
Slew rate off[8] 70 to 40% V_{OUT}, R_L = 12 Ω:	$-dV/dt_{off}$	0.2	--	1.1	V/µs

6) Device on 50mm*50mm*1.5mm epoxy PCB FR4 with 6cm² (one layer, 70µm thick) copper area for V_{bb} connection. PCB is vertical without blown air. See page 14

7) not subject to production test, specified by design

8) See timing diagram on page 12.

Parameter and Conditions, each of the four channels at T_j = -40...+150°C, V_{bb} = 12 V unless otherwise specified	**Symbol**	**Values**			**Unit**
		min	typ	max	
Operating Parameters					
Operating voltage	$V_{bb(on)}$	5.5	--	40	V
Undervoltage switch off[9] T_j =-40°C...25°C:	$V_{bb(u\ so)}$	--	--	4.5	V
T_j =125°C:		--	--	4.5[10]	
Overvoltage protection[11] I_{bb} = 40 mA	$V_{bb(AZ)}$	41	47	52	V
Standby current[12] T_j =-40°C...25°C:	$I_{bb(off)}$	--	4.5	8	µA
V_{IN} = 0; see diagram page 11 T_j =150°C:		--	--	12	
T_j =125°C:		--	--	8[10]	
Off-State output current (included in $I_{bb(off)}$) V_{IN} = 0; each channel	$I_{L(off)}$	--	1	5	µA
Operating current [13], V_{IN} = 5V, one channel on:	I_{GND}	--	0.5	0.9	mA
all channels on:		--	1.0	1.7	
Protection Functions[14]					
Current limit, V_{out} = 0V, (see timing diagrams, page 12) T_j =-40°C:	$I_{L(lim)}$	--	--	14	A
T_j =25°C:		--	9	--	
T_j =+150°C:		5	--	--	
Repetitive short circuit current limit, $T_j = T_{jt}$ each channel	$I_{L(SCr)}$	--	6.5	--	A
two channels (see timing diagrams, page 12)		--	6.5	--	
Initial short circuit shutdown time $T_{j,start}$ =25°C: V_{out} = 0V (see timing diagrams on page 12)	$t_{off(SC)}$	--	2	--	ms
Output clamp (inductive load switch off)[15] at $V_{ON(CL)} = V_{bb} - V_{OUT}$, I_L= 40 mA	$V_{ON(CL)}$	41	47	52	V
Thermal overload trip temperature	T_{jt}	150	--	--	°C
Thermal hysteresis	ΔT_{jt}	--	10	--	K

9) is the voltage, where the device doesn´t change it´s switching condition for 15ms after the supply voltage falling below the lower limit of Vbb(on)

10 not subject to production test, specified by design

11) Supply voltages higher than $V_{bb(AZ)}$ require an external current limit for the GND and status pins (a 150Ω resistor for the GND connection is recommended). See also $V_{ON(CL)}$ in table of protection functions and circuit diagram on page 9.

12) Measured with load; for the whole device; all channels off

13) Add I_{ST}, if I_{ST} > 0

14) Integrated protection functions are designed to prevent IC destruction under fault conditions described in the data sheet. Fault conditions are considered as "outside" normal operating range. Protection functions are not designed for continuous repetitive operation.

15) If channels are connected in parallel, output clamp is usually accomplished by the channel with the lowest $V_{ON(CL)}$

Parameter and Conditions, each of the four channels at T_j = -40...+150°C, V_{bb} = 12 V unless otherwise specified	**Symbol**	**Values**			**Unit**
		min	typ	max	
Reverse Battery					
Reverse battery voltage [16]	$-V_{bb}$	--	--	32	V
Drain-source diode voltage (V_{out} > V_{bb}) I_L = -2.0 A, T_j = +150°C	$-V_{ON}$	--	600	--	mV
Diagnostic Characteristics					
Open load detection voltage	$V_{OUT(OL)}$	1.7	2.8	4.0	V
Input and Status Feedback[17]					
Input resistance (see circuit page 9)	R_I	2.5	4.0	6.0	kΩ
Input turn-on threshold voltage	$V_{IN(T+)}$	--	--	2.5	V
Input turn-off threshold voltage	$V_{IN(T-)}$	1.0	--	--	V
Input threshold hysteresis	$\Delta V_{IN(T)}$	--	0.2	--	V
Status change after positive input slope[18] with open load	$t_{d(STon)}$	--	10	20	µs
Status change after positive input slope[18] with overload	$t_{d(STon)}$	30	--	--	µs
Status change after negative input slope with open load	$t_{d(SToff)}$	--	--	500	µs
Status change after negative input slope[18] with overtemperature	$t_{d(SToff)}$	--	--	20	µs
Off state input current V_{IN} = 0.4 V:	$I_{IN(off)}$	5	--	20	µA
On state input current V_{IN} = 5 V:	$I_{IN(on)}$	10	35	60	µA
Status output (open drain)					
Zener limit voltage I_{ST} = +1.6 mA:	$V_{ST(high)}$	5.4	--	--	V
ST low voltage I_{ST} = +1.6 mA:	$V_{ST(low)}$	--	--	0.6	

16) Requires a 150 Ω resistor in GND connection. The reverse load current through the intrinsic drain-source diode has to be limited by the connected load. Power dissipation is higher compared to normal operating conditions due to the voltage drop across the drain-source diode. The temperature protection is not active during reverse current operation! Input and Status currents have to be limited (see max. ratings page 4 and circuit page 9).

17) If ground resistors R_{GND} are used, add the voltage drop across these resistors.

18) not subject to protection test, specified by design

Truth Table

(each channel)

	IN	OUT	ST
Normal operation	L H	L H	H H
Open load	L H	Z H	L[19] H
Overtemperature	L H	L L	H L

L = "Low" Level X = don't care Z = high impedance, potential depends on external circuit
H = "High" Level Status signal valid after the time delay shown in the timing diagrams

Parallel switching of channel 1 and 2 is easily possible by connecting the inputs and outputs in parallel (see truth table). If switching channel 1 to 2 in parallel, the status outputs ST1 and ST2 have to be configured as a 'Wired OR' function with a single pull-up resistor.

Terms

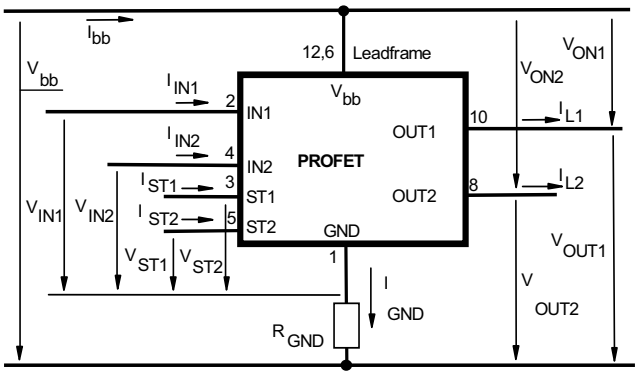

Leadframe (V_{bb}) is connected to pin 6,12
External R_{GND} optional; single resistor $R_{GND} = 150\ \Omega$ for reverse battery protection up to the max. operating voltage.

[19] L, if potential at the Output exceeds the OpenLoad detection voltage

Input circuit (ESD protection), IN1 or IN2

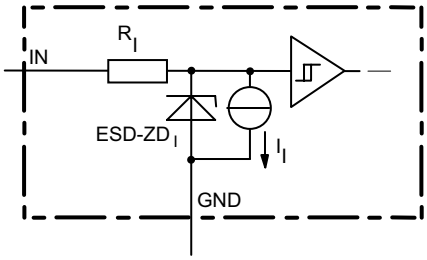

The use of ESD zener diodes as voltage clamp at DC conditions is not recommended.

Status output, ST1 or ST2

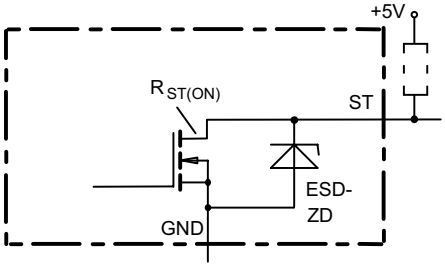

ESD-Zener diode: 6.1 V typ., max 0.3 mA; $R_{ST(ON)}$ < 375 Ω at 1.6 mA. The use of ESD zener diodes as voltage clamp at DC conditions is not recommended.

Inductive and overvoltage output clamp, OUT1 or OUT2

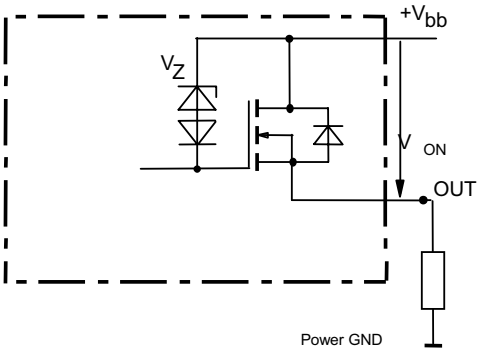

V_{ON} clamped to $V_{ON(CL)}$ = 47 V typ.

Overvolt. and reverse batt. protection

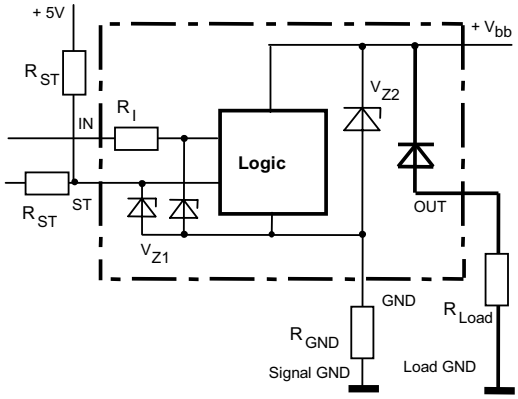

V_{Z1} = 6.1 V typ., V_{Z2} = 47 V typ., R_{GND} = 150 Ω, R_{ST}= 15 kΩ, R_I= 3.5 kΩ typ.
In case of reverse battery the load current has to be limited by the load. Temperature protection is not active

Open-load detection, OUT1 or OUT2

OFF-state diagnostic condition:
Open Load, if V_{OUT} > 3 V typ.; IN low

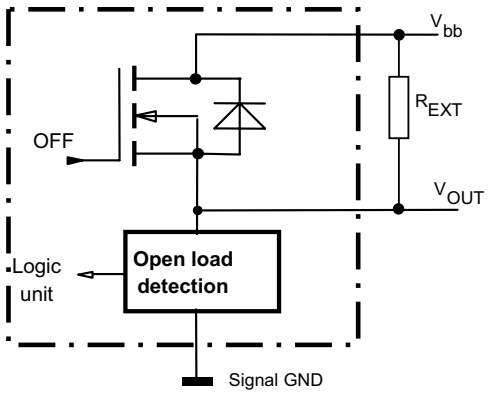

GND disconnect

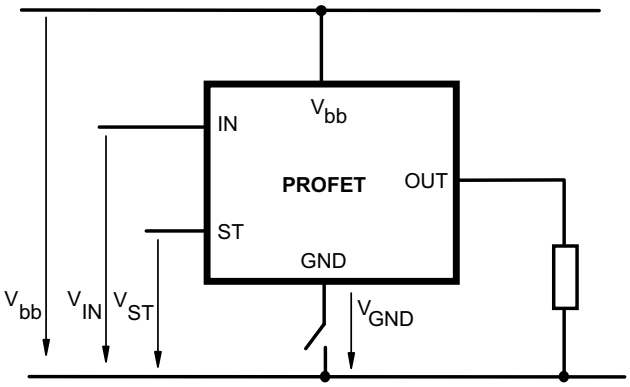

Any kind of load. In case of IN = high is $V_{OUT} \approx V_{IN} - V_{IN(T+)}$.
Due to V_{GND} > 0, no V_{ST} = low signal available.

GND disconnect with GND pull up

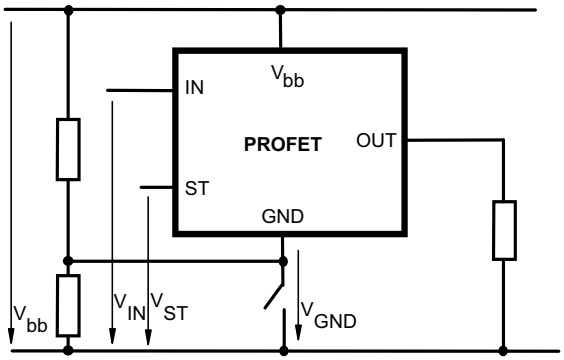

Any kind of load. If $V_{GND} > V_{IN} - V_{IN(T+)}$ device stays off
Due to $V_{GND} > 0$, no V_{ST} = low signal available.

V_{bb} disconnect with energized inductive load

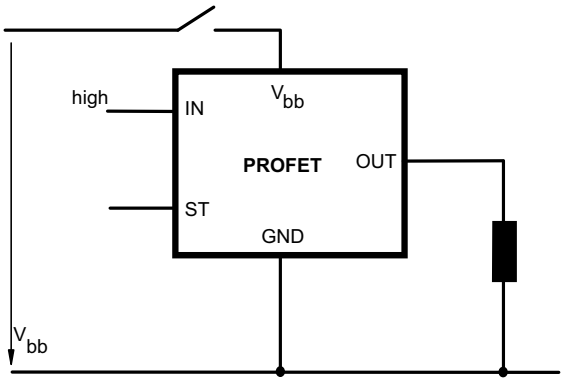

For inductive load currents up to the limits defined by Z_L (max. ratings and diagram on page 10) each switch is protected against loss of V_{bb}.

Consider at your PCB layout that in the case of Vbb disconnection with energized inductive load all the load current flows through the GND connection.

Inductive load switch-off energy dissipation

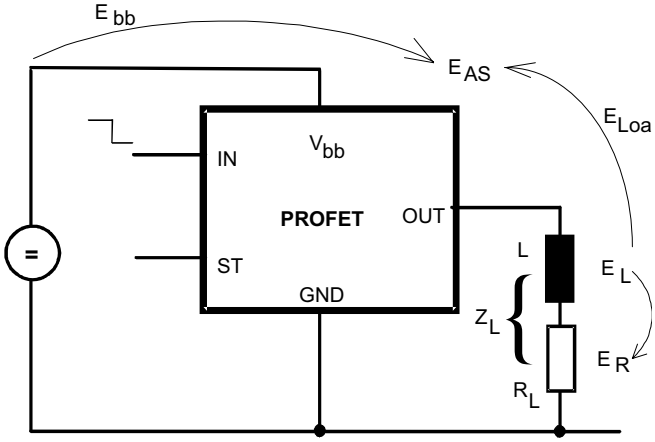

Energy stored in load inductance:

$$E_L = {}^1/_2 \cdot L \cdot I_L^2$$

While demagnetizing load inductance, the energy dissipated in PROFET is

$$E_{AS} = E_{bb} + E_L - E_R = V_{ON(CL)} \cdot i_L(t)\, dt,$$

with an approximate solution for $R_L > 0\,\Omega$:

$$E_{AS} = \frac{I_L \cdot L}{2 \cdot R_L} \left(V_{bb} + |V_{OUT(CL)}| \right) \ln \left(1 + \frac{I_L \cdot R_L}{|V_{OUT(CL)}|} \right)$$

Maximum allowable load inductance for a single switch off (one channel)[4)]

$L = f(I_L)$; $T_{j,start} = 150°C$, $V_{bb} = 12\,V$, $R_L = 0\,\Omega$

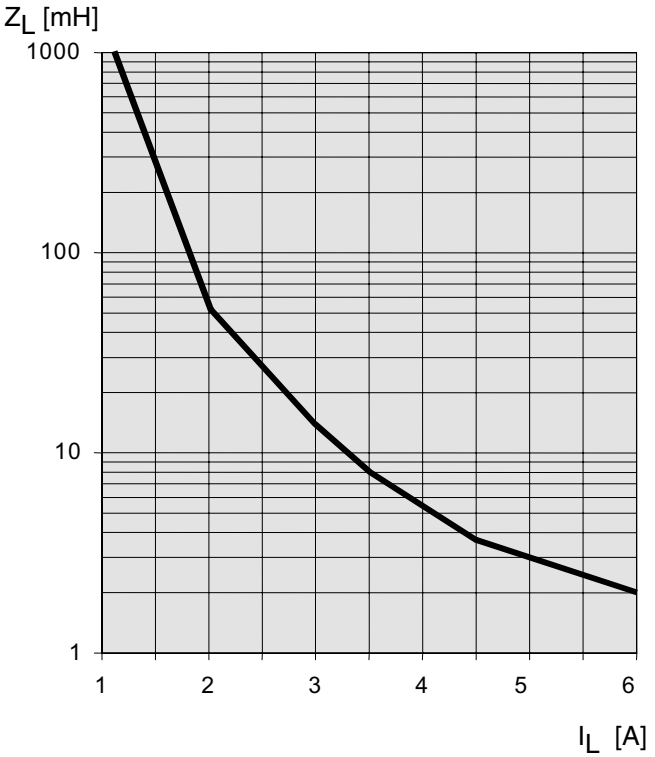

Typ. on-state resistance

$R_{ON} = f(V_{bb}, T_j)$; I_L = 2 A, IN = high

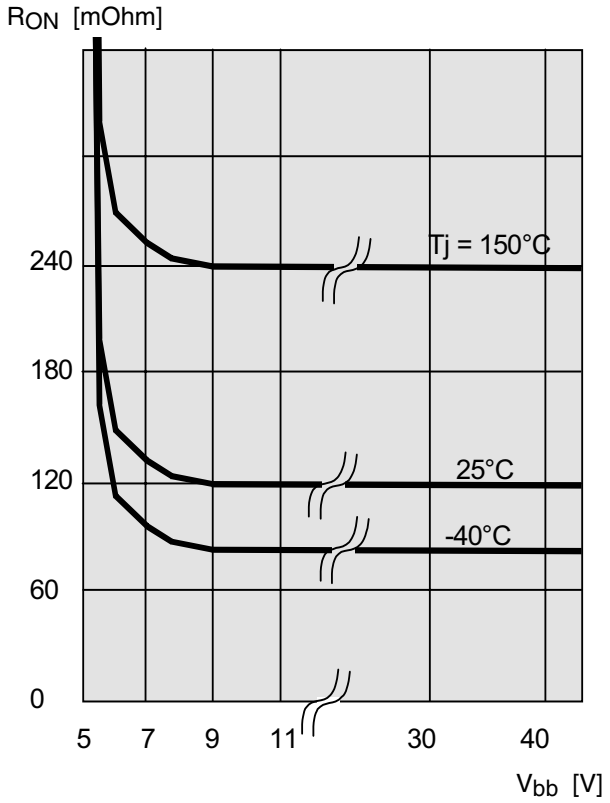

Typ. standby current

$I_{bb(off)} = f(T_j)$; V_{bb} = 9...34 V, IN1,2 = low

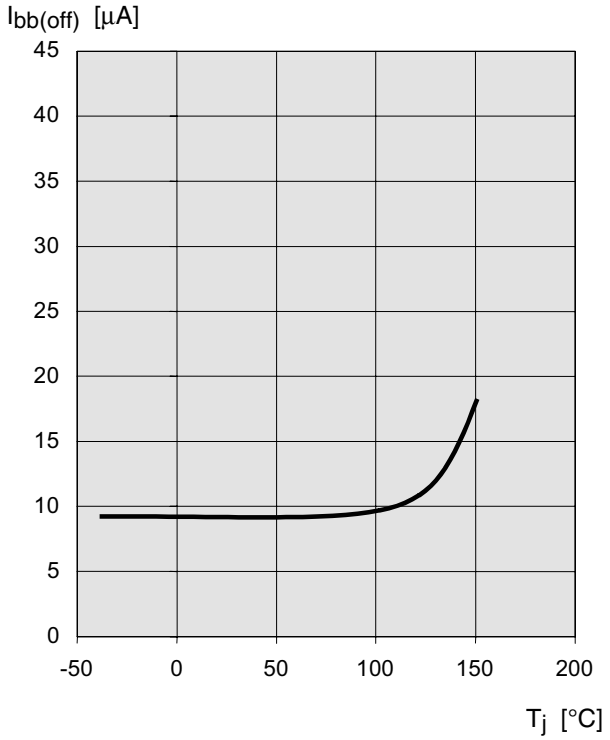

Timing diagrams

All channels are symmetric and consequently the diagrams are valid for channel 1 to channel 4

Figure 1a: V_{bb} turn on:

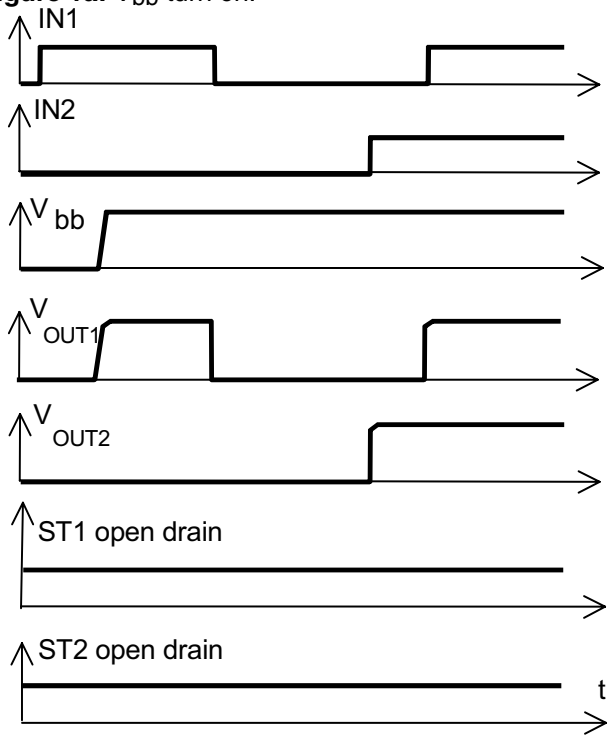

Figure 2a: Switching a resistive load, turn-on/off time and slew rate definition:

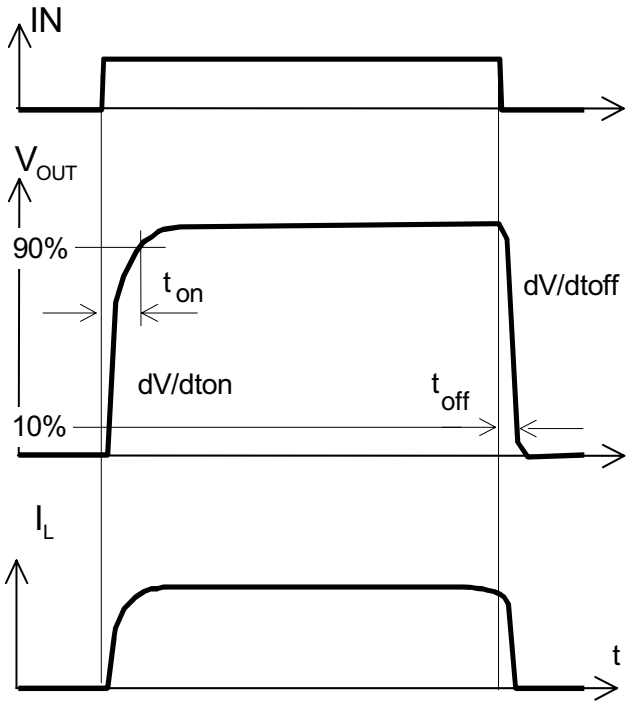

Figure 2b: Switching a lamp:

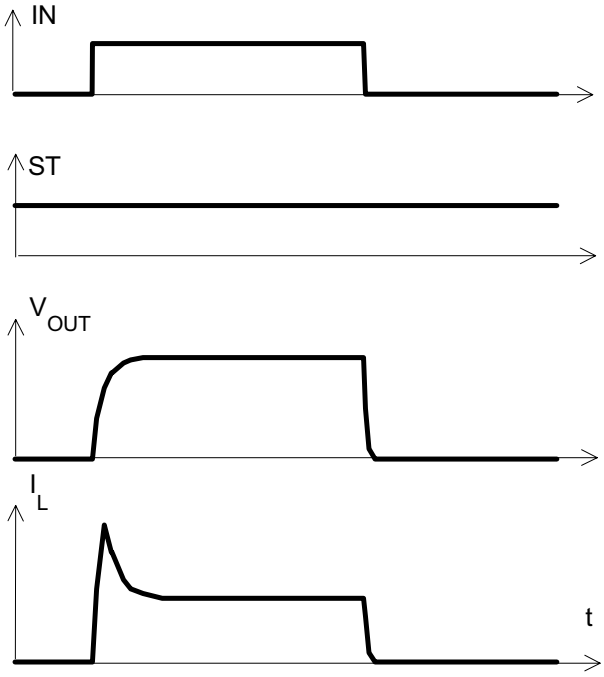

Figure 3a: Turn on into short circuit: shut down by overtemperature, restart by cooling

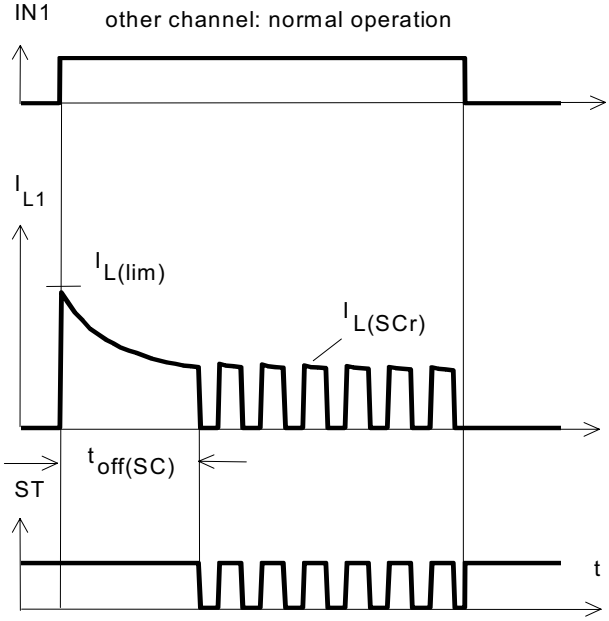

Heating up of the chip may require several milliseconds, depending on external conditions

Figure 3b: Turn on into short circuit:
shut down by overtemperature, restart by cooling
(two parallel switched channels 1 and 2)

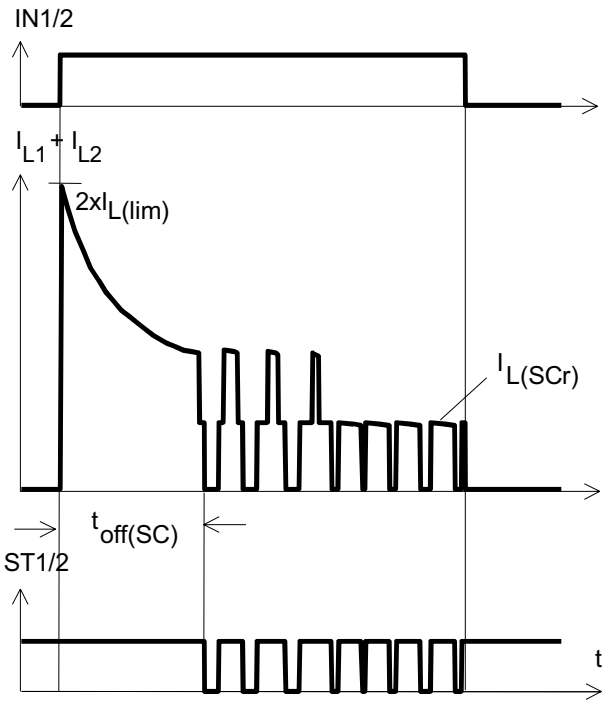

ST1 and ST2 have to be configured as a 'Wired OR' function ST1/2 with a single pull-up resistor.

Figure 4a: Overtemperature:
Reset if $T_j < T_{jt}$

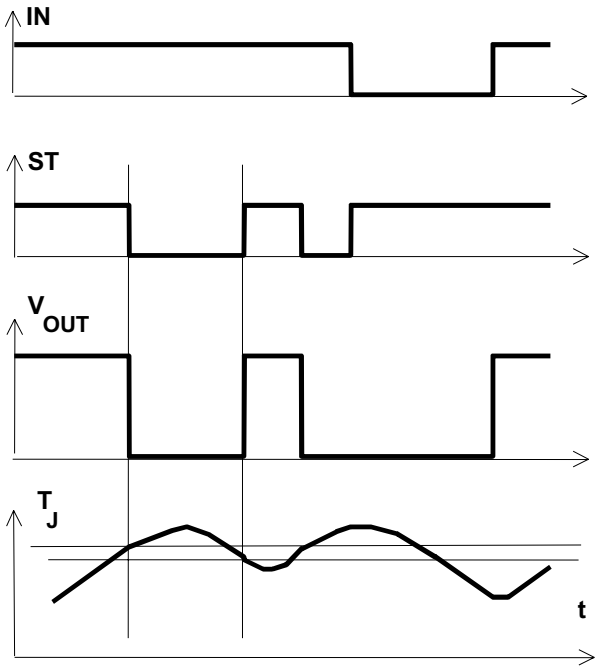

Figure 5a: Open load: detection in OFF-state, turn on/off to open load
Open load of channel 1; other channels normal operation

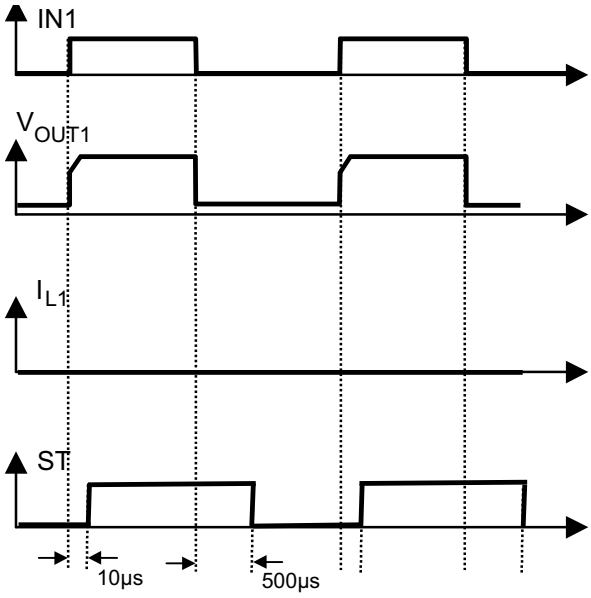

Figure 6a: Status change after, turn on/off to overtemperature
Overtemperature of channel 1; other channels normal operation

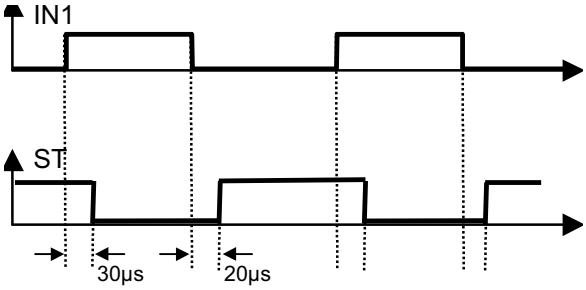

Package Outlines

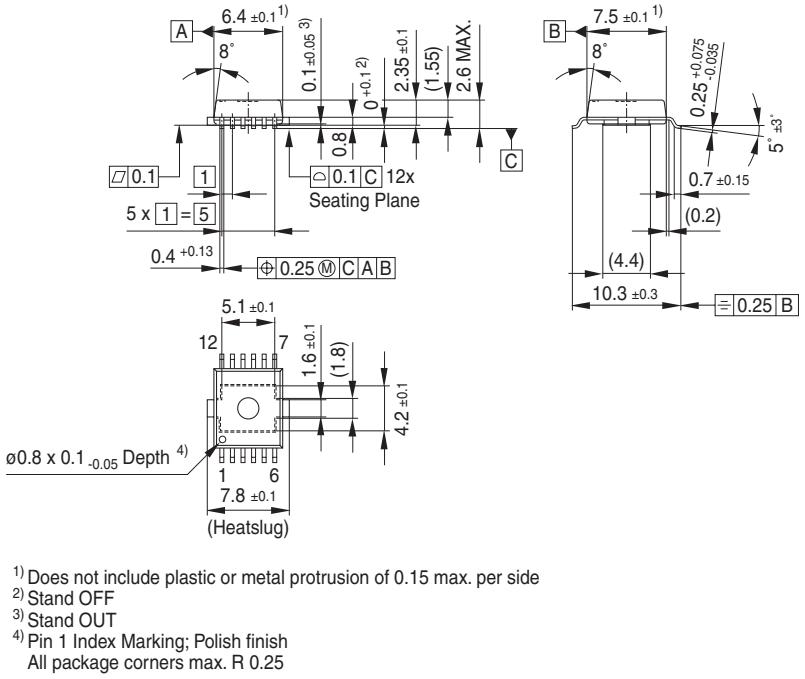

1) Does not include plastic or metal protrusion of 0.15 max. per side
2) Stand OFF
3) Stand OUT
4) Pin 1 Index Marking; Polish finish
All package corners max. R 0.25

Figure 1 **PG-DSO-12-9** (Plastic Dual Small Outline Package) (RoHS-compliant)

To meet the world-wide customer requirements for environmentally friendly products and to be compliant with government regulations the device is available as a green product. Green products are RoHS-Compliant (i.e Pb-free finish on leads and suitable for Pb-free soldering according to IPC/JEDEC J-STD-020).

Please specify the package needed (e.g. green package) when placing an order

You can find all of our packages, sorts of packing and others in our Infineon Internet Page “Products”: **http://www.infineon.com/products**.

Dimensions in mm

Revision History

Version	Date	Changes
V1.1	2007-05-29	Creation of the green datasheet. First page : Adding the green logo and the AEC qualified Adding the bullet AEC qualified and the RoHS compliant features Package page Modification of the package to be green.

Edition 2007-05-29

Published by
Infineon Technologies AG
81726 Munich, Germany

© Infineon Technologies AG 5/29/07.
All Rights Reserved.

Legal Disclaimer

The information given in this document shall in no event be regarded as a guarantee of conditions or characteristics (“Beschaffenheitsgarantie”). With respect to any examples or hints given herein, any typical values stated herein and/or any information regarding the application of the device, Infineon Technologies hereby disclaims any and all warranties and liabilities of any kind, including without limitation warranties of non-infringement of intellectual property rights of any third party.

Information

For further information on technology, delivery terms and conditions and prices please contact your nearest Infineon Technologies Office (**www.infineon.com**).

Warnings

Due to technical requirements components may contain dangerous substances. For information on the types in question please contact your nearest Infineon Technologies Office.

Infineon Technologies Components may only be used in life-support devices or systems with the express written approval of Infineon Technologies, if a failure of such components can reasonably be expected to cause the failure of that life-support device or system, or to affect the safety or effectiveness of that device or system. Life support devices or systems are intended to be implanted in the human body, or to support and/or maintain and sustain and/or protect human life. If they fail, it is reasonable to assume that the health of the user or other persons may be endangered.