# STP2NK90Z - STD2NK90Z
# STD2NK90Z-1

N-channel 900V - 5Ω - 2.1A - TO-220 /DPAK/IPAK
Zener-Protected SuperMESH™ MOSFET

## General features

| Type | $V_{DSS}$ (@Tjmax) | $R_{DS(on)}$ | $I_D$ | $P_W$ |
|---|---|---|---|---|
| STD2NK90Z | 900V | <6.5Ω | 2.1A | 70W |
| STD2NK90Z-1 | 900V | <6.5Ω | 2.1A | 70W |
| STP2NK90Z | 900V | <6.5Ω | 2.1A | 70W |

- Extremely high dv/dt capability
- Improved esd capability
- 100% avalanche rated
- Gate charge minimized
- Very low intrinsic capacitances
- Very good manufacturing repeatibility

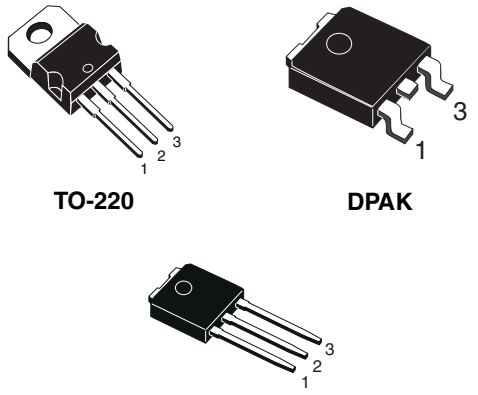


## Internal schematic diagram

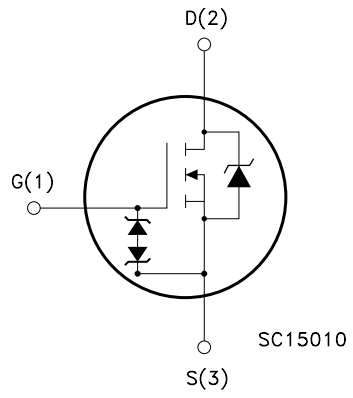


## Description

The SuperMESH™ series is obtained through an extreme optimization of ST's well established stripbased PowerMESH™ layout. In addition to pushing on-resistance significantly down, special care is taken to ensure a very good dv/dt capability for the most demanding applications. Such series complements ST full range of high voltage MOSFETs including revolutionary MDmesh™ products.

## Applications

- Switching application

## Order codes

| Part number | Marking | Package | Packaging |
|---|---|---|---|
| STD2NK90ZT4 | D2NK90Z | DPAK | Tape & reel |
| STD2NK90Z-1 | D2NK90Z | IPAK | Tube |
| STP2NK90Z | P2NK90Z | TO-220 | Tube |




sales@prom-elec.com / ООО ПРОМЭЛЕКТРОНИКА

# Contents

**1 Electrical ratings . . . . . 3**

1.1 Protection features of gate-to-source zener diodes . . . . . 4

**2 Electrical characteristics . . . . . 5**

2.1 Electrical characteristics (curves) . . . . . 7

**3 Test circuit . . . . . 10**

**4 Package mechanical data . . . . . 11**

**5 Packing mechanical data . . . . . 15**

**6 Revision history . . . . . 17**

# 1 Electrical ratings

**Table 1. Absolute maximum ratings**

| Symbol | Parameter | Value | | Unit |
|---|---|---|---|---|
| | | STP2NK90Z | STD2NK90Z<br>STD2NK90Z-1 | |
| $V_{DS}$ | Drain-source voltage ($V_{GS}$ = 0) | 900 | | V |
| $V_{DGR}$ | Drain-gate voltage ($R_{GS}$ = 20 kΩ) | 900 | | V |
| $V_{GS}$ | Gate- source Voltage | ± 30 | | V |
| $I_D$ | Drain current (continuous) at $T_C$ = 25°C | 2.1 | | A |
| $I_D$ | Drain current (continuous) at $T_C$ = 100°C | 1.3 | | A |
| $I_{DM}$ (1) | Drain current (pulsed) | 8.4 | | A |
| $P_{TOT}$ | Total dissipation at $T_C$ = 25°C | 70 | | W |
| | Derating factor | 0.56 | | W/°C |
| $V_{ESD(G-S)}$ | Gate source ESD(HBM-C=100pF, R=1.5KΩ) | 2000 | | V |
| dv/dt (2) | Peak diode recovery voltage slope | 4.5 | | V/ns |
| $T_j$<br>$T_{stg}$ | Operating junction temperature<br>Storage temperature | -55 to 150<br>-55 to 150 | | °C<br>°C |

1. Pulse width limited by safe operating area
2. $I_{SD} \leq$2.1A, di/dt $\leq$200A/µs, $V_{DD} \leq V_{(BR)DSS}$, $T_j \leq T_{JMAX}$.

**Table 2. Thermal data**

| Symbol | Parameter | Value | Unit |
|---|---|---|---|
| Rthj-case | Thermal resistance junction-case max | 1.78 | °C/W |
| Rthj-amb<br>$T_l$ | Thermal resistance junction-ambient max<br>Maximum lead temperature for soldering purpose | 62.5<br>300 | °C/W<br>°C |

**Table 3. Avalanche characteristics**

| Symbol | Parameter | Value | Unit |
|---|---|---|---|
| $I_{AR}$ | Avalanche current, repetitive or not-repetitive (pulse width limited by $T_j$ max) | 2.1 | A |
| $E_{AS}$ | Single pulse avalanche energy (starting $T_j$ = 25 °C, $I_D$ = $I_{AR}$, $V_{DD}$ = 50 V) | 150 | mJ |

**Table 4. Gate-source zener diode**

| Symbol | Parameter | Test conditions | Min. | Typ. | Max. | Unit |
|---|---|---|---|---|---|---|
| $BV_{GSO}$ | Gate-source breakdown voltage | Igs=± 1mA (open drain) | 30 | | | V |

## 1.1 Protection features of gate-to-source zener diodes

The built-in back-to-back Zener diodes have specifically been designed to enhance not only the device's ESD capability, but also to make them safely absorb possible voltage transients that may occasionally be applied from gate to source. In this respect the Zener voltage is appropriate to achieve an efficient and cost-effective intervention to protect the device's integrity. These integrated Zener diodes thus avoid the usage of external components.

# 2 Electrical characteristics

($T_{CASE}$=25°C unless otherwise specified)

**Table 5. On/off states**

| Symbol | Parameter | Test condictions | Min. | Typ. | Max. | Unit |
|---|---|---|---|---|---|---|
| $V_{(BR)DSS}$ | Drain-source breakdown Voltage | $I_D$ = 1 mA, $V_{GS}$ = 0 | 900 | | | V |
| $I_{DSS}$ | Zero gate voltage Drain current ($V_{GS}$ = 0) | $V_{DS}$ = Max Rating<br>$V_{DS}$ = Max Rating, $T_C$ = 125°C | | | 1<br>50 | µA<br>µA |
| $I_{GSS}$ | Gate-body Leakage current ($V_{DS}$ = 0) | $V_{GS}$ = ± 20 V | | | ± 10 | µA |
| $V_{GS(th)}$ | Gate threshold voltage | $V_{DS}$ = $V_{GS}$, $I_D$ = 50 µA | 3 | 3.75 | 4.5 | V |
| $R_{DS(on}$ | Static drain-source on resistance | $V_{GS}$ = 10 V, $I_D$ = 1.05 A | | 5 | 6.5 | Ω |

**Table 6. Dynamic**

| Symbol | Parameter | Test condictions | Min. | Typ. | Max. | Unit |
|---|---|---|---|---|---|---|
| $g_{fs}$ (1) | Forward transconductance | $V_{DS}$ = 15 V , $I_D$ = 1.05 A | | 2.3 | | S |
| $C_{iss}$<br>$C_{oss}$<br>$C_{rss}$ | Input capacitance<br>Output capacitance<br>Reverse transfer capacitance | $V_{DS}$ = 25 V, f = 1 MHz,<br>$V_{GS}$ = 0 | | 485<br>50<br>10 | | pF<br>pF<br>pF |
| $C_{oss\ eq}$(2). | Equivalent output capacitance | $V_{GS}$ = 0 V, $V_{DS}$ = 0 to 720 V | | 24 | | pF |
| $Q_g$<br>$Q_{gs}$<br>$Q_{gd}$ | Total gate charge<br>Gate-source charge<br>Gate-drain charge | $V_{DD}$ = 720 V, $I_D$ = 2 A,<br>$V_{GS}$ = 10 V<br>(see Figure 22) | | 19.5<br>3.4<br>10.8 | 27 | nC<br>nC<br>nC |

1. Pulsed: pulse duration=300µs, duty cycle 1.5%
2. $C_{oss\ eq.}$ is defined as a constant equivalent capacitance giving the same charging time as $C_{oss}$ when $V_{DS}$ inceases from 0 to 80% $V_{DSS}$

**Table 7. Switching times**

| Symbol | Parameter | Test condictions | Min. | Typ. | Max. | Unit |
|---|---|---|---|---|---|---|
| $t_{d(on)}$<br>$t_r$<br>$t_{d(off)}$<br>$t_f$ | Turn-on delay time<br>Rise time<br>Turn-off delay time<br>Fall time | $V_{DD}$ = 450 V, $I_D$ = 1 A,<br>$R_G$ = 4.7 Ω, $V_{GS}$ = 10 V<br>(see Figure 19) | | 21<br>11<br>43<br>40 | | ns<br>ns<br>ns<br>ns |

**Table 8. Source drain diode**

| Symbol | Parameter | Test condictions | Min | Typ. | Max | Unit |
|---|---|---|---|---|---|---|
| $I_{SD}$ | Source-drain current | | | | 2.1 | A |
| $I_{SDM}$(1) | Source-drain current (pulsed) | | | | 8.4 | A |
| $V_{SD}$(2) | Forward on voltage | $I_{SD}$ = 2.1 A, $V_{GS}$ = 0 | | | 1.6 | V |
| $t_{rr}$<br>$Q_{rr}$<br>$I_{RRM}$ | Reverse recovery time<br>Reverse recovery charge<br>Reverse recovery current | $I_{SD}$ = 2 A, di/dt = 100 A/µs<br>$V_{DD}$ = 50V<br>(see Figure 20) | | 415<br>1.5<br>7.2 | | ns<br>µC<br>A |
| $t_{rr}$<br>$Q_{rr}$<br>$I_{RRM}$ | Reverse recovery time<br>Reverse recovery charge<br>Reverse recovery current | $I_{SD}$ = 2 A, di/dt = 100 A/µs<br>$V_{DD}$ = 50V, $T_j$ = 150°C<br>(see Figure 20) | | 515<br>1.9<br>7.5 | | ns<br>µC<br>A |

1. Pulse width limited by safe operating area
2. Pulsed: pulse duration=300µs, duty cycle 1.5%

## 2.1 Electrical characteristics (curves)

**Figure 1. Safe operating area for TO-220/ DPAK/ D²PAK**

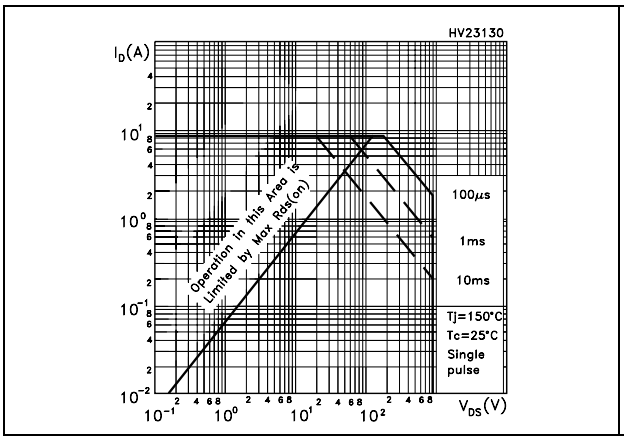


**Figure 2. Thermal impedance for TO-220/ DPAK/ D²PAK**

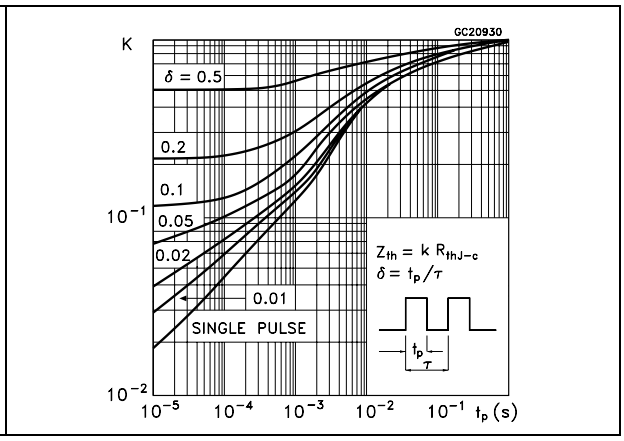


**Figure 3. Safe operating area for TO-220FP**

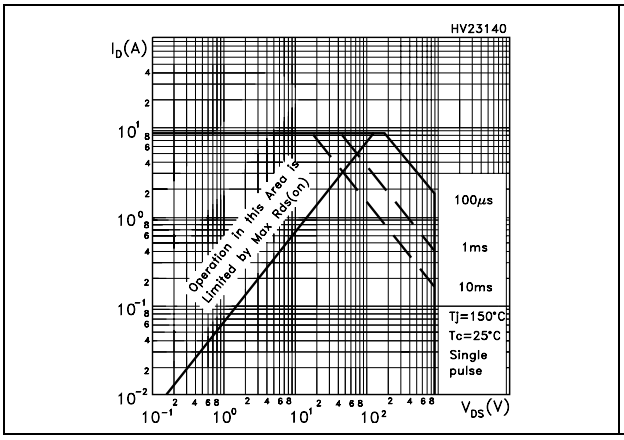


**Figure 4. Thermal impedance for TO-220FP**

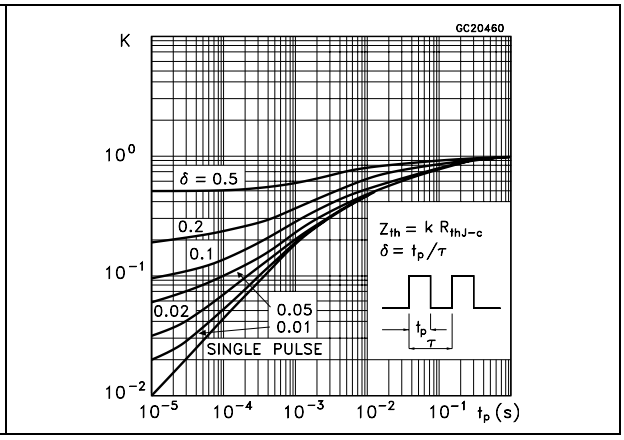


**Figure 5. Output characterisics**

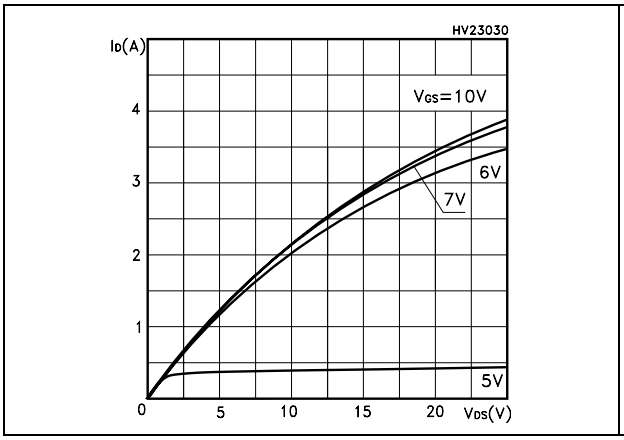


**Figure 6. Transfer characteristics**

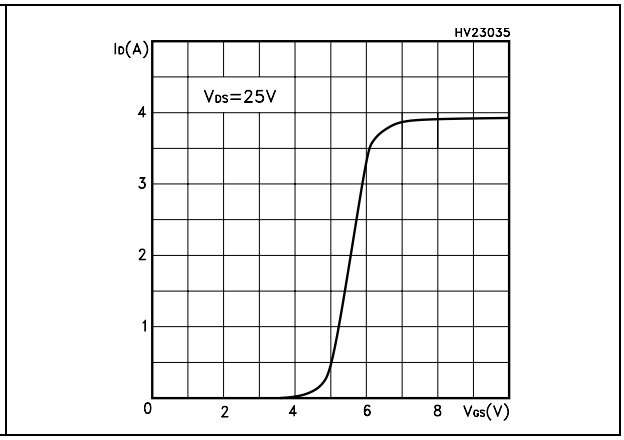

**Figure 7. Transconductance**

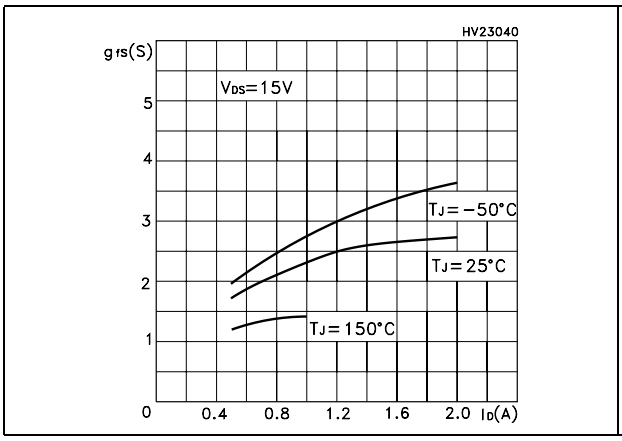


**Figure 8. Static drain-source on resistance**

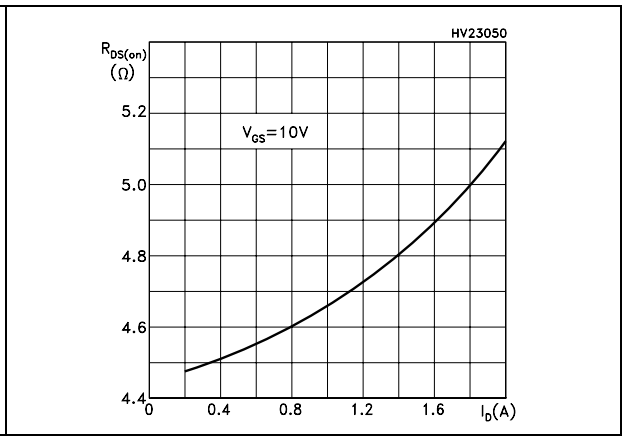


**Figure 9. Gate charge vs gate-source voltage**

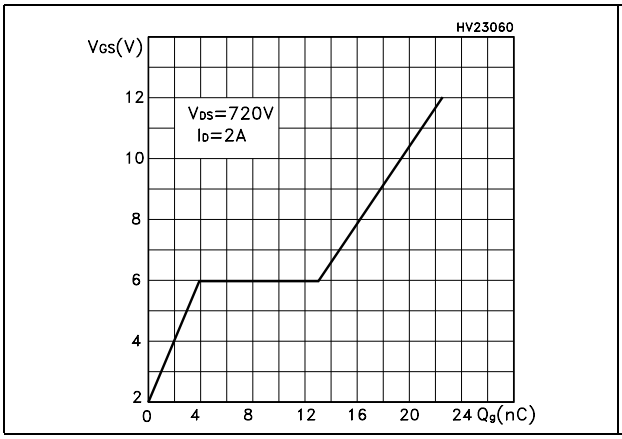


**Figure 10. Capacitance variations**

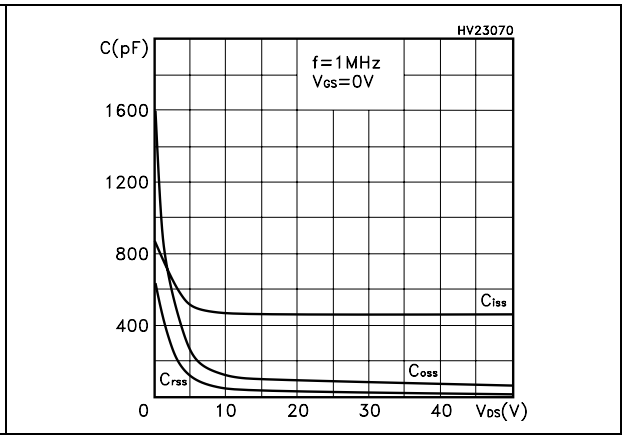


**Figure 11. Normalized gate threshold voltage vs temperature**

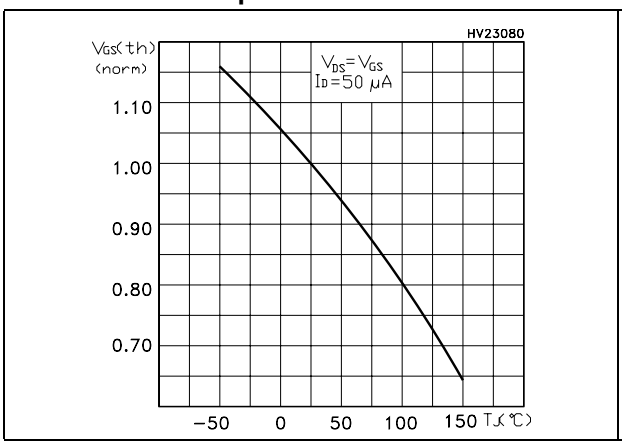


**Figure 12. Normalized on resistance vs temperature**

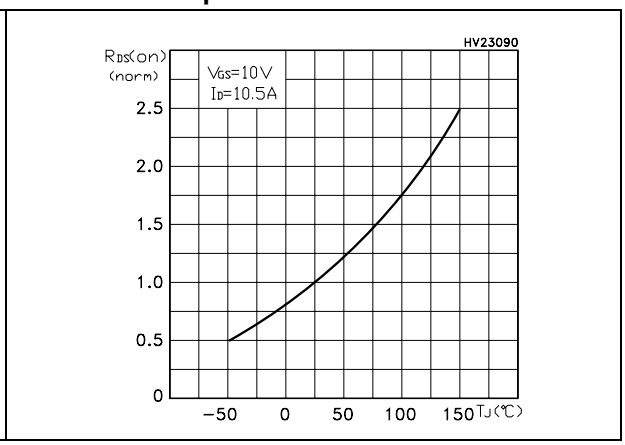

**Figure 13. Source-drain diode forward characteristics**

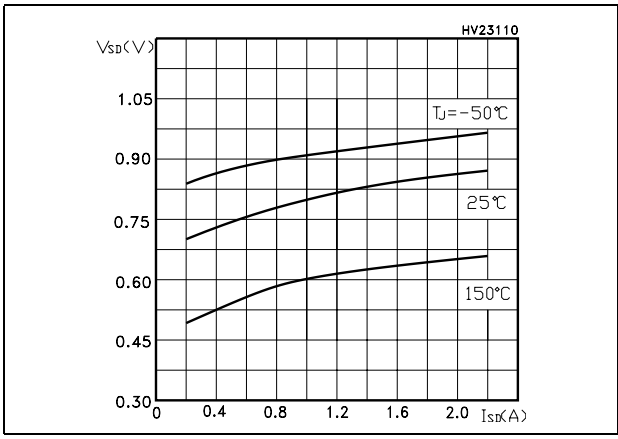


**Figure 14. Normalized $B_{VDSS}$ vs temperature**

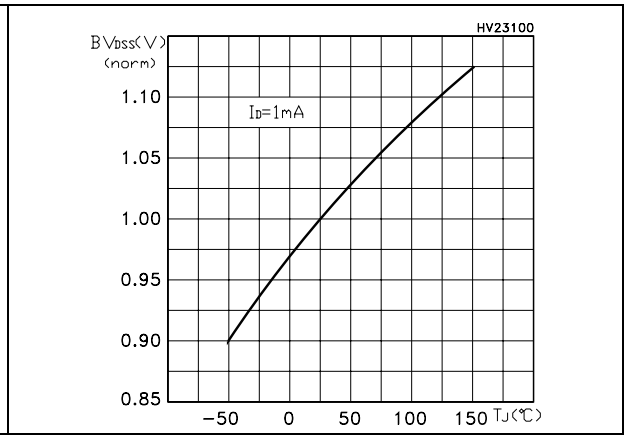


**Figure 15. Maximum avalanche energy vs temperature**

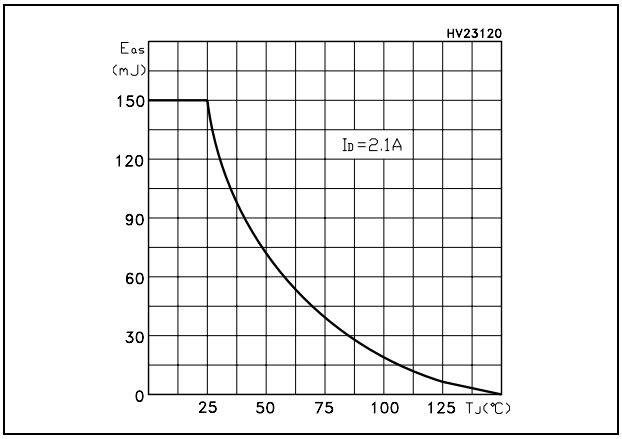

# 3 Test circuit

**Figure 16. Switching times test circuit for resistive load**

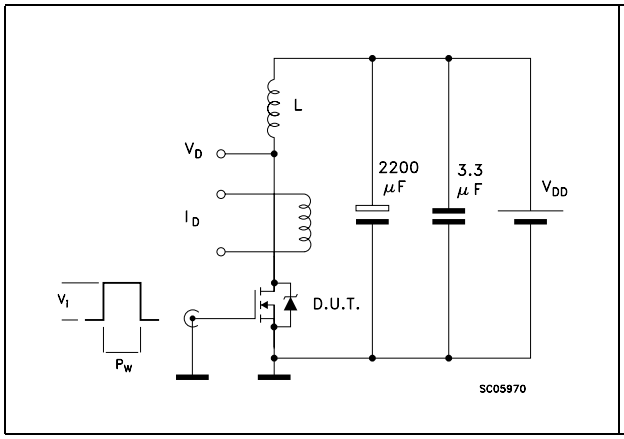


**Figure 17. Gate charge test circuit**

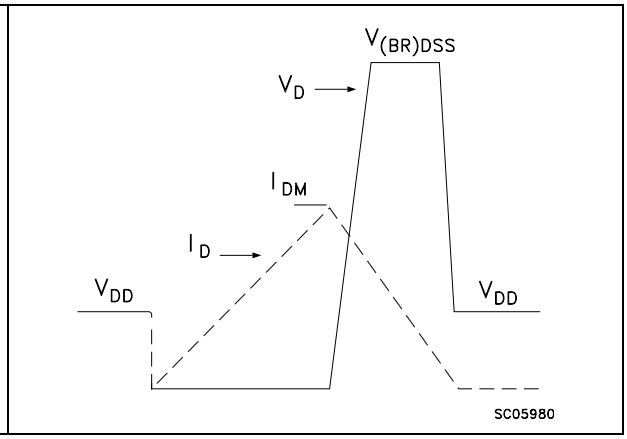


**Figure 18. Test circuit for inductive load switching and diode recovery times**

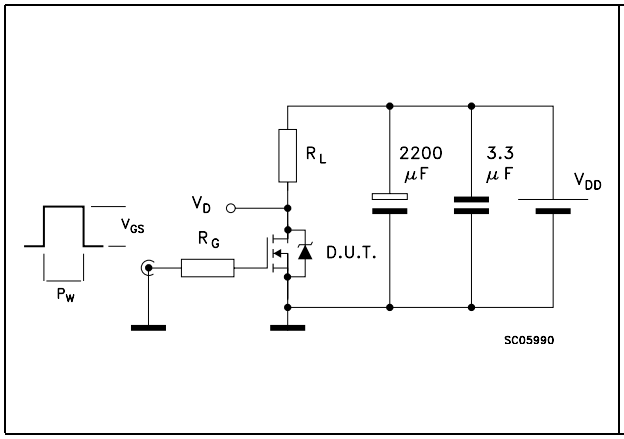


**Figure 19. Unclamped Inductive load test circuit**

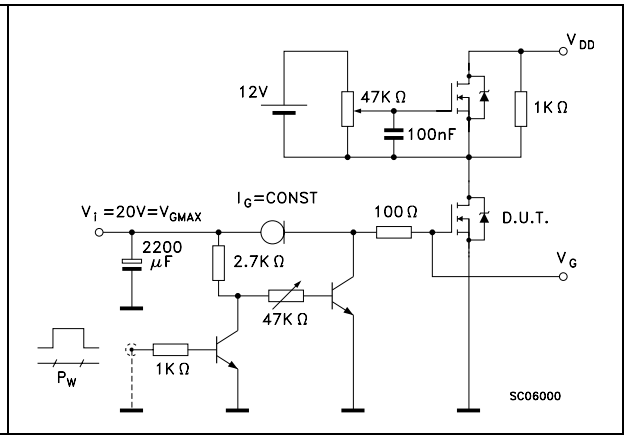


**Figure 20. Test circuit for inductive load switching and diode recovery times**

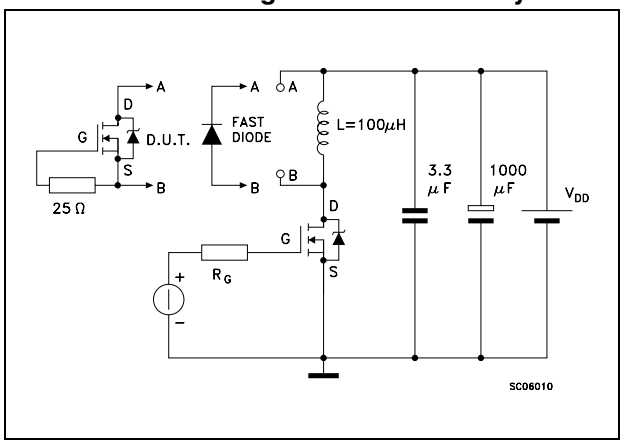

# 4 Package mechanical data

In order to meet environmental requirements, ST offers these devices in ECOPACK® packages. These packages have a Lead-free second level interconnect . The category of second level interconnect is marked on the package and on the inner box label, in compliance with JEDEC Standard JESD97. The maximum ratings related to soldering conditions are also marked on the inner box label. ECOPACK is an ST trademark. ECOPACK specifications are available at: www.st.com

## TO-220 MECHANICAL DATA

| DIM. | mm. | | | inch | | |
|---|---|---|---|---|---|---|
| | MIN. | TYP | MAX. | MIN. | TYP. | MAX. |
| A | 4.40 | | 4.60 | 0.173 | | 0.181 |
| b | 0.61 | | 0.88 | 0.024 | | 0.034 |
| b1 | 1.15 | | 1.70 | 0.045 | | 0.066 |
| c | 0.49 | | 0.70 | 0.019 | | 0.027 |
| D | 15.25 | | 15.75 | 0.60 | | 0.620 |
| E | 10 | | 10.40 | 0.393 | | 0.409 |
| e | 2.40 | | 2.70 | 0.094 | | 0.106 |
| e1 | 4.95 | | 5.15 | 0.194 | | 0.202 |
| F | 1.23 | | 1.32 | 0.048 | | 0.052 |
| H1 | 6.20 | | 6.60 | 0.244 | | 0.256 |
| J1 | 2.40 | | 2.72 | 0.094 | | 0.107 |
| L | 13 | | 14 | 0.511 | | 0.551 |
| L1 | 3.50 | | 3.93 | 0.137 | | 0.154 |
| L20 | | 16.40 | | | 0.645 | |
| L30 | | 28.90 | | | 1.137 | |
| øP | 3.75 | | 3.85 | 0.147 | | 0.151 |
| Q | 2.65 | | 2.95 | 0.104 | | 0.116 |

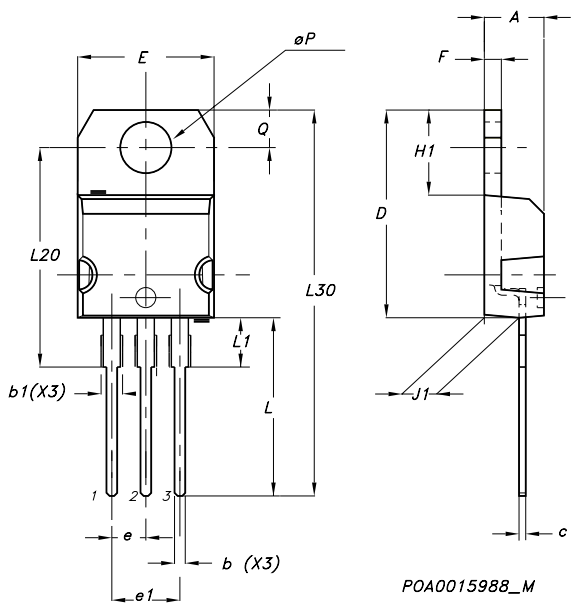

## TO-251 (IPAK) MECHANICAL DATA

| DIM. | mm | | | inch | | |
|---|---|---|---|---|---|---|
| | MIN. | TYP. | MAX. | MIN. | TYP. | MAX. |
| A | 2.2 | | 2.4 | 0.086 | | 0.094 |
| A1 | 0.9 | | 1.1 | 0.035 | | 0.043 |
| A3 | 0.7 | | 1.3 | 0.027 | | 0.051 |
| B | 0.64 | | 0.9 | 0.025 | | 0.031 |
| B2 | 5.2 | | 5.4 | 0.204 | | 0.212 |
| B3 | | | 0.85 | | | 0.033 |
| B5 | | 0.3 | | | 0.012 | |
| B6 | | | 0.95 | | | 0.037 |
| C | 0.45 | | 0.6 | 0.017 | | 0.023 |
| C2 | 0.48 | | 0.6 | 0.019 | | 0.023 |
| D | 6 | | 6.2 | 0.236 | | 0.244 |
| E | 6.4 | | 6.6 | 0.252 | | 0.260 |
| G | 4.4 | | 4.6 | 0.173 | | 0.181 |
| H | 15.9 | | 16.3 | 0.626 | | 0.641 |
| L | 9 | | 9.4 | 0.354 | | 0.370 |
| L1 | 0.8 | | 1.2 | 0.031 | | 0.047 |
| L2 | | 0.8 | 1 | | 0.031 | 0.039 |

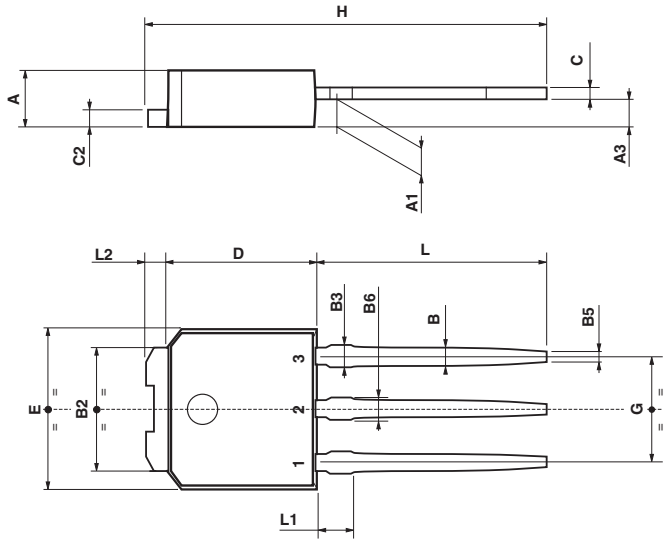


0068771-E

## DPAK MECHANICAL DATA

| DIM. | mm. | | | inch | | |
|---|---|---|---|---|---|---|
| | MIN. | TYP | MAX. | MIN. | TYP. | MAX. |
| A | 2.2 | | 2.4 | 0.086 | | 0.094 |
| A1 | 0.9 | | 1.1 | 0.035 | | 0.043 |
| A2 | 0.03 | | 0.23 | 0.001 | | 0.009 |
| B | 0.64 | | 0.9 | 0.025 | | 0.035 |
| b4 | 5.2 | | 5.4 | 0.204 | | 0.212 |
| C | 0.45 | | 0.6 | 0.017 | | 0.023 |
| C2 | 0.48 | | 0.6 | 0.019 | | 0.023 |
| D | 6 | | 6.2 | 0.236 | | 0.244 |
| D1 | | 5.1 | | | 0.200 | |
| E | 6.4 | | 6.6 | 0.252 | | 0.260 |
| E1 | | 4.7 | | | 0.185 | |
| e | | 2.28 | | | 0.090 | |
| e1 | 4.4 | | 4.6 | 0.173 | | 0.181 |
| H | 9.35 | | 10.1 | 0.368 | | 0.397 |
| L | 1 | | | 0.039 | | |
| (L1) | | 2.8 | | | 0.110 | |
| L2 | | 0.8 | | | 0.031 | |
| L4 | 0.6 | | 1 | 0.023 | | 0.039 |
| R | | 0.2 | | | 0.008 | |
| V2 | 0° | | 8° | 0° | | 8° |

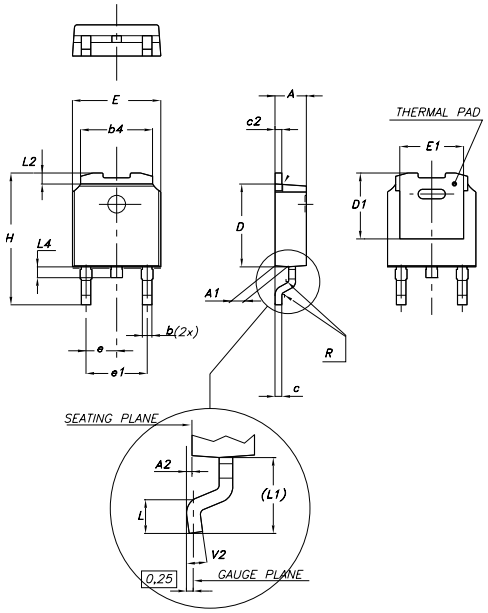


0068772-F

# 5 Packing mechanical data

## D²PAK FOOTPRINT

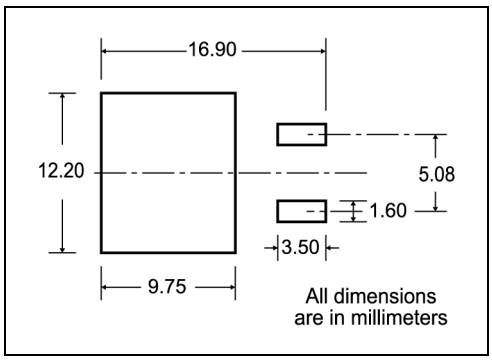


## TAPE AND REEL SHIPMENT

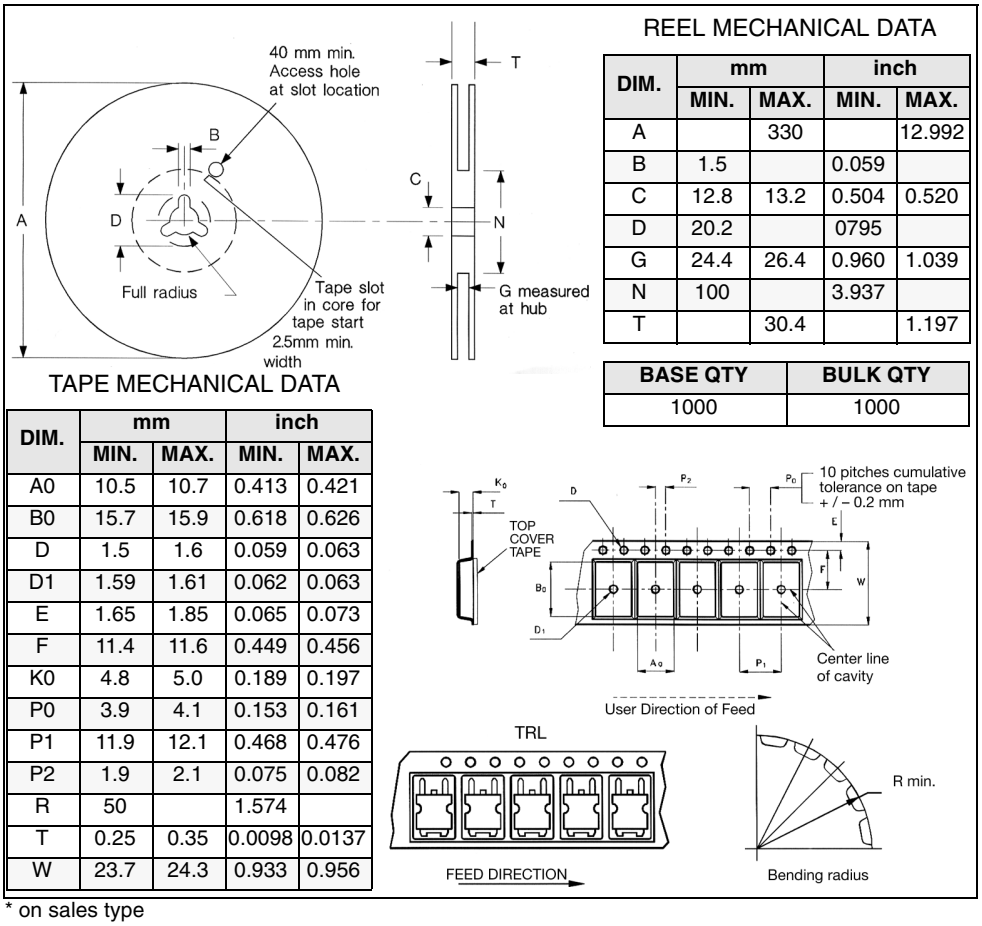


REEL MECHANICAL DATA

| DIM. | mm | | inch | |
|---|---|---|---|---|
| | MIN. | MAX. | MIN. | MAX. |
| A | | 330 | | 12.992 |
| B | 1.5 | | 0.059 | |
| C | 12.8 | 13.2 | 0.504 | 0.520 |
| D | 20.2 | | 0795 | |
| G | 24.4 | 26.4 | 0.960 | 1.039 |
| N | 100 | | 3.937 | |
| T | | 30.4 | | 1.197 |

| BASE QTY | BULK QTY |
|---|---|
| 1000 | 1000 |

TAPE MECHANICAL DATA

| DIM. | mm | | inch | |
|---|---|---|---|---|
| | MIN. | MAX. | MIN. | MAX. |
| A0 | 10.5 | 10.7 | 0.413 | 0.421 |
| B0 | 15.7 | 15.9 | 0.618 | 0.626 |
| D | 1.5 | 1.6 | 0.059 | 0.063 |
| D1 | 1.59 | 1.61 | 0.062 | 0.063 |
| E | 1.65 | 1.85 | 0.065 | 0.073 |
| F | 11.4 | 11.6 | 0.449 | 0.456 |
| K0 | 4.8 | 5.0 | 0.189 | 0.197 |
| P0 | 3.9 | 4.1 | 0.153 | 0.161 |
| P1 | 11.9 | 12.1 | 0.468 | 0.476 |
| P2 | 1.9 | 2.1 | 0.075 | 0.082 |
| R | 50 | | 1.574 | |
| T | 0.25 | 0.35 | 0.0098 | 0.0137 |
| W | 23.7 | 24.3 | 0.933 | 0.956 |

* on sales type

## DPAK FOOTPRINT

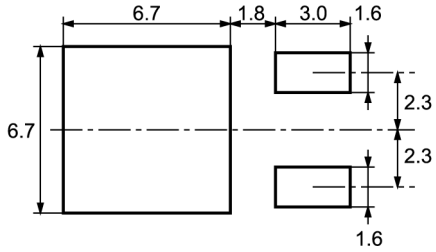


All dimensions are in millimeters

## TAPE AND REEL SHIPMENT

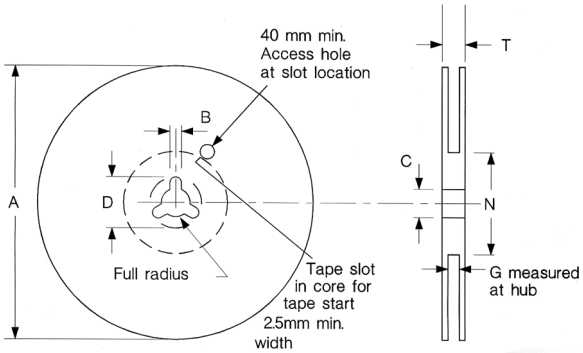


REEL MECHANICAL DATA

| DIM. | mm | | inch | |
|---|---|---|---|---|
| | MIN. | MAX. | MIN. | MAX. |
| A | | 330 | | 12.992 |
| B | 1.5 | | 0.059 | |
| C | 12.8 | 13.2 | 0.504 | 0.520 |
| D | 20.2 | | 0.795 | |
| G | 16.4 | 18.4 | 0.645 | 0.724 |
| N | 50 | | 1.968 | |
| T | | 22.4 | | 0.881 |

| BASE QTY | BULK QTY |
|---|---|
| 2500 | 2500 |

TAPE MECHANICAL DATA

| DIM. | mm | | inch | |
|---|---|---|---|---|
| | MIN. | MAX. | MIN. | MAX. |
| A0 | 6.8 | 7 | 0.267 | 0.275 |
| B0 | 10.4 | 10.6 | 0.409 | 0.417 |
| B1 | | 12.1 | | 0.476 |
| D | 1.5 | 1.6 | 0.059 | 0.063 |
| D1 | 1.5 | | 0.059 | |
| E | 1.65 | 1.85 | 0.065 | 0.073 |
| F | 7.4 | 7.6 | 0.291 | 0.299 |
| K0 | 2.55 | 2.75 | 0.100 | 0.108 |
| P0 | 3.9 | 4.1 | 0.153 | 0.161 |
| P1 | 7.9 | 8.1 | 0.311 | 0.319 |
| P2 | 1.9 | 2.1 | 0.075 | 0.082 |
| R | 40 | | 1.574 | |
| W | 15.7 | 16.3 | 0.618 | 0.641 |

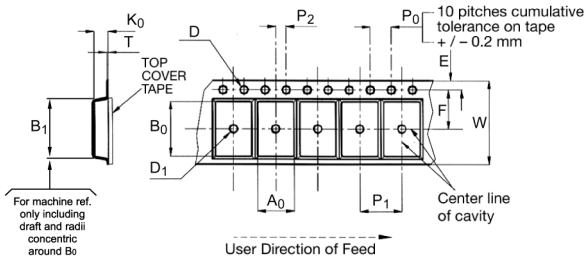


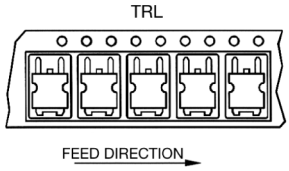


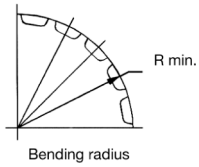

# 6 Revision history

**Table 9. Revision history**

| Date | Revision | Changes |
|---|---|---|
| 06-Oct-2004 | 1 | First version |
| 08-Sep-2005 | 2 | Complete version |
| 05-Mar-2006 | 3 | Inserted Ecopack indication |
| 27-Jul-2006 | 4 | New template, no content change |

**Please Read Carefully:**

Information in this document is provided solely in connection with ST products. STMicroelectronics NV and its subsidiaries (“ST”) reserve the right to make changes, corrections, modifications or improvements, to this document, and the products and services described herein at any time, without notice.

All ST products are sold pursuant to ST’s terms and conditions of sale.

Purchasers are solely responsible for the choice, selection and use of the ST products and services described herein, and ST assumes no liability whatsoever relating to the choice, selection or use of the ST products and services described herein.

No license, express or implied, by estoppel or otherwise, to any intellectual property rights is granted under this document. If any part of this document refers to any third party products or services it shall not be deemed a license grant by ST for the use of such third party products or services, or any intellectual property contained therein or considered as a warranty covering the use in any manner whatsoever of such third party products or services or any intellectual property contained therein.

**UNLESS OTHERWISE SET FORTH IN ST’S TERMS AND CONDITIONS OF SALE ST DISCLAIMS ANY EXPRESS OR IMPLIED WARRANTY WITH RESPECT TO THE USE AND/OR SALE OF ST PRODUCTS INCLUDING WITHOUT LIMITATION IMPLIED WARRANTIES OF MERCHANTABILITY, FITNESS FOR A PARTICULAR PURPOSE (AND THEIR EQUIVALENTS UNDER THE LAWS OF ANY JURISDICTION), OR INFRINGEMENT OF ANY PATENT, COPYRIGHT OR OTHER INTELLECTUAL PROPERTY RIGHT.**

**UNLESS EXPRESSLY APPROVED IN WRITING BY AN AUTHORIZED ST REPRESENTATIVE, ST PRODUCTS ARE NOT RECOMMENDED, AUTHORIZED OR WARRANTED FOR USE IN MILITARY, AIR CRAFT, SPACE, LIFE SAVING, OR LIFE SUSTAINING APPLICATIONS, NOR IN PRODUCTS OR SYSTEMS WHERE FAILURE OR MALFUNCTION MAY RESULT IN PERSONAL INJURY, DEATH, OR SEVERE PROPERTY OR ENVIRONMENTAL DAMAGE. ST PRODUCTS WHICH ARE NOT SPECIFIED AS "AUTOMOTIVE GRADE" MAY ONLY BE USED IN AUTOMOTIVE APPLICATIONS AT USER’S OWN RISK.**

Resale of ST products with provisions different from the statements and/or technical features set forth in this document shall immediately void any warranty granted by ST for the ST product or service described herein and shall not create or extend in any manner whatsoever, any liability of ST.

ST and the ST logo are trademarks or registered trademarks of ST in various countries.

Information in this document supersedes and replaces all information previously supplied.

The ST logo is a registered trademark of STMicroelectronics. All other names are the property of their respective owners.

© 2006 STMicroelectronics - All rights reserved

STMicroelectronics group of companies

Australia - Belgium - Brazil - Canada - China - Czech Republic - Finland - France - Germany - Hong Kong - India - Israel - Italy - Japan - Malaysia - Malta - Morocco - Singapore - Spain - Sweden - Switzerland - United Kingdom - United States of America

**www.st.com**