M24C64-W M24C64-R
M24C64-F M24C64-DF

Datasheet

64-Kbit serial I²C bus EEPROMs

WLCSP (CU)

WLCSP (CS)

UFDFPN5 (MH)

DFN5 - 1.7 x 1.4 mm

SO8N (MN)

150 mil width

TSSOP8 (DW)

169 mil width

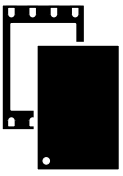

UFDFPN8 (MC)

DFN8 - 2 x 3 mm

Thin WLCSP (CT)

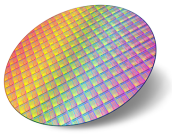

Unsawn wafer

Product status link
M24C64-W
M24C64-R
M24C64-F
M24C64-DF

Features

- Compatible with following I²C bus modes:
  - 1 MHz
  - 400 kHz
  - 100 kHz
- Memory array:
  - 64 Kbit (8 Kbyte) of EEPROM
  - Page size: 32 byte
  - Additional Write lockable page (M24C64-D order codes)
- Single supply voltage:
  - 1.7 V to 5.5 V over –40 °C / +85 °C
  - 1.6 V to 5.5 V over 0 °C / +85 °C
- Write:
  - Byte write within 5 ms
  - Page write within 5 ms
- Random and sequential read modes
- Write protect of the whole memory array
- Enhanced ESD/latch-Up protection
- More than 4 million write cycles
- More than 200-years data retention

Packages

Packages RoHS-compliant and Halogen-free

- SO8N (ECOPACK2)
- TSSOP8 (ECOPACK2)
- UFDFPN (ECOPACK2)
- WLCSP (ECOPACK2)
- Unsawn wafer (each die is tested)

sales@prom-elec.com / ООО ПРОМЭЛЕКТРОНИКА

1 Description

The M24C64 is a 64-Kbit I^{2}C-compatible EEPROM (electrically erasable programmable memory) organized as 8K × 8 bits.

Over an ambient temperature range of -40 °C / +85 °C, the M24C64-W can operate with a supply voltage from 2.5 V to 5.5 V, the M24C64-R can operate with a supply voltage from 1.8 V to 5.5 V, and the M24C64-F and M24C64-DF can operate with a supply voltage from 1.7 V to 5.5 V (the M24C64-F can also operate down to 1.6 V, under some restricting conditions).

The M24C64-D offers an additional page, named the identification page (32 byte). The identification page can be used to store sensitive application parameters which can be (later) permanently locked in read-only mode.

Figure 1. Logic diagram

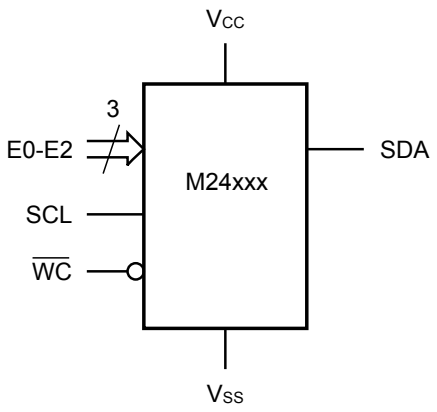

Table 1. Signal names

Signal name	Function	Direction
E2, E1, E0	Chip enable	Input
SDA	Serial data	I/O
SCL	Serial clock	Input
$\overline{WC}$	Write control	Input
V_{CC}	Supply voltage	-
V_{SS}	Ground	-

Figure 2. 8-pin package connections, top view

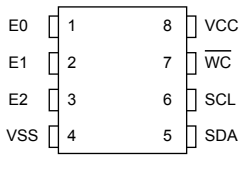

1. See Section 9 Package information for package dimensions, and how to identify pin 1

Figure 3. UFDFPN5 (DFN5) package connections

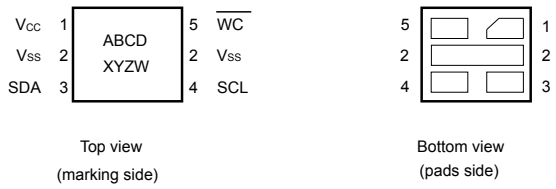

1. Inputs E2, E1 and E0 are not connected, therefore read as (000). Refer to Section 2.3 Chip enable (E2, E1, E0) for further explanations.

Figure 4. WLCSP 4-bump ultra thin package connections

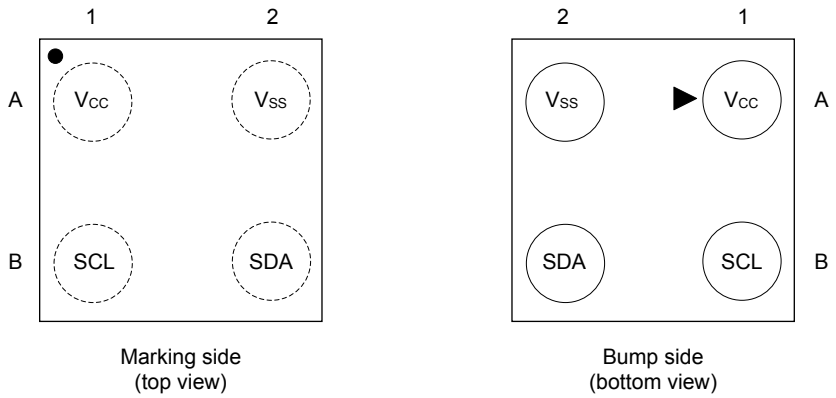

1. Inputs E2, E1, E0 are read as (000). Refer to Section 2.3 Chip enable (E2, E1, E0) for further explanations.

Table 2. WLCSP 4-bump signal vs. bump position

Position	A	B
1	V_{CC}	SCL
2	V_{SS}	SDA

Figure 5. WLCSP 5-bump connections

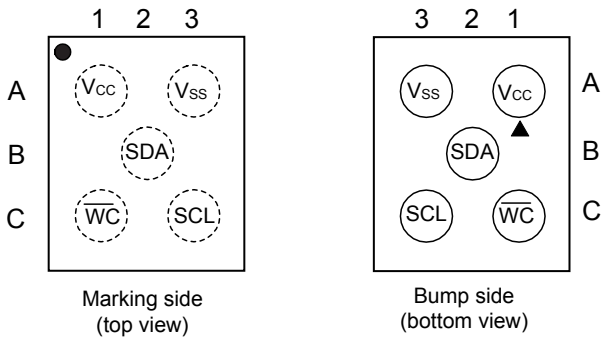

1. Inputs E2, E1, E0 are internally connected to (001). Refer to Section 2.3 Chip enable (E2, E1, E0) for further explanations.

Table 3. WLCSP 5-bump signals vs. bump position

Position	A	B	C
1	V_{CC}	-	$\overline{WC}$
2	-	SDA	-
3	V_{SS}	-	SCL

Figure 6. WLCSP 8-bump connections

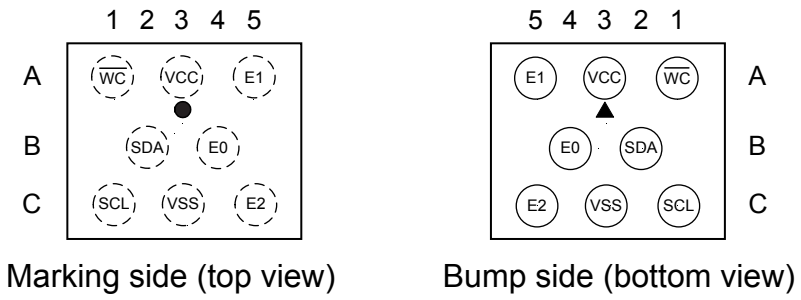

Table 4. WLCSP 8-bump signals vs. bump position

Position	A	B	C
1	$\overline{WC}$	-	SCL
2	-	SDA	-
3	V_{CC}	-	V_{SS}
4	-	E0	-
5	E1	-	E2

2 Signal description

2.1 Serial clock (SCL)

The signal applied on the SCL input is used to strobe the data available on SDA(in) and to output the data on SDA(out).

2.2 Serial data (SDA)

SDA is an input/output used to transfer data in or data out of the device. SDA(out) is an open drain output that may be wired-AND with other open drain or open collector signals on the bus. A pull-up resistor must be connected from serial data (SDA) to V_{CC} (Figure 15 and Figure 16 indicates how to calculate the value of the pull-up resistor).

2.3 Chip enable (E2, E1, E0)

(E2, E1,E0) input signals are used to set the value that is to be looked for on the three least significant bits (b3, b2, b1) of the 7-bit device select code (see Table 5. These inputs must be tied to V_{CC} or V_{SS} to establish the device select code as shown in Figure 7. When not connected (left floating), these inputs are read as low (0, 0, 0).

For the 4-balls WLCSP package (see Figure 4), the (E2,E1,E0) inputs are internally connected to (0, 0, 0).

For the 5-balls WLCSP package (see Figure 5), the (E2,E1,E0) inputs are internally connected to (0,0,1).

Figure 7. Chip enable inputs connection

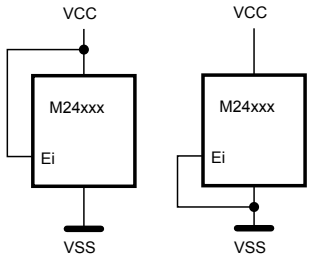

2.4 Write control ($\overline{WC}$)

This input signal is useful for protecting the entire contents of the memory from inadvertent write operations. Write operations are disabled to the entire memory array when write control ($\overline{WC}$) is driven high. Write operations are enabled when write control ($\overline{WC}$) is either driven low or left floating.

When write control ($\overline{WC}$) is driven high, device select and address bytes are acknowledged, data bytes are not acknowledged.

2.5 V_{SS} (ground)

V_{SS} is the reference for all signals, including the V_{CC} supply voltage.

2.6 Supply voltage (V_{CC})

2.6.1 Operating supply voltage (V_{CC})

Prior to selecting the memory and issuing instructions to it, a valid and stable V_{CC} voltage within the specified [V_{CC}(min), V_{CC}(max)] range must be applied (see Operating conditions in Section 8 DC and AC parameters). In order to secure a stable DC supply voltage, it is recommended to decouple the V_{CC} line with a suitable capacitor (usually of the order of 10 nF to 100 nF) close to the V_{CC}/V_{SS} package pins.

This voltage must remain stable and valid until the end of the transmission of the instruction and, for a write instruction, until the completion of the internal write cycle (t_W).

2.6.2 Power-up conditions

The V_{CC} voltage has to rise continuously from 0 V up to the minimum V_{CC} operating voltage (see Operating conditions in Section 8 DC and AC parameters).

2.6.3 Device reset

In order to prevent inadvertent write operations during power-up, a power-on-reset (POR) circuit is included.

At power-up, the device does not respond to any instruction until V_{CC} has reached the internal reset threshold voltage. This threshold is lower than the minimum V_{CC} operating voltage (see Operating conditions in Section 8 DC and AC parameters). When V_{CC} passes over the POR threshold, the device is reset and enters the standby power mode; however, the device must not be accessed until V_{CC} reaches a valid and stable DC voltage within the specified [V_{CC}(min), V_{CC}(max)] range (see Operating conditions in Section 8 DC and AC parameters).

In a similar way, during power-down (continuous decrease in V_{CC}), the device must not be accessed when V_{CC} drops below V_{CC}(min). When V_{CC} drops below the power-on-reset threshold voltage, the device stops responding to any instruction sent to it.

2.6.4 Power-down conditions

During power-down (continuous decrease in V_{CC}), the device must be in the standby power mode (mode reached after decoding a stop condition, assuming that there is no internal write cycle in progress).

3 Block diagram

The block diagram of the device is described below.

Figure 8. Block diagram

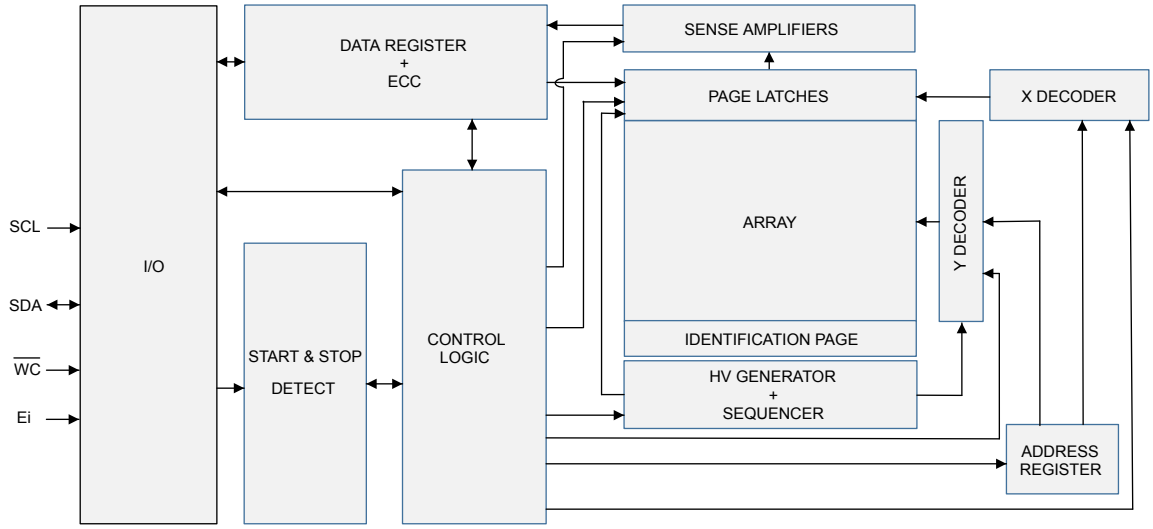

4 Device operation

The device supports the I^{2}C protocol. This is summarized in Figure 9. Any device that sends data on to the bus is defined to be a transmitter, and any device that reads the data to be a receiver. The device that controls the data transfer is known as the bus master, and the other as the slave device. A data transfer can only be initiated by the bus master, which also provides the serial clock for synchronization. The device is always a slave in all communications.

Figure 9. I^{2}C bus protocol

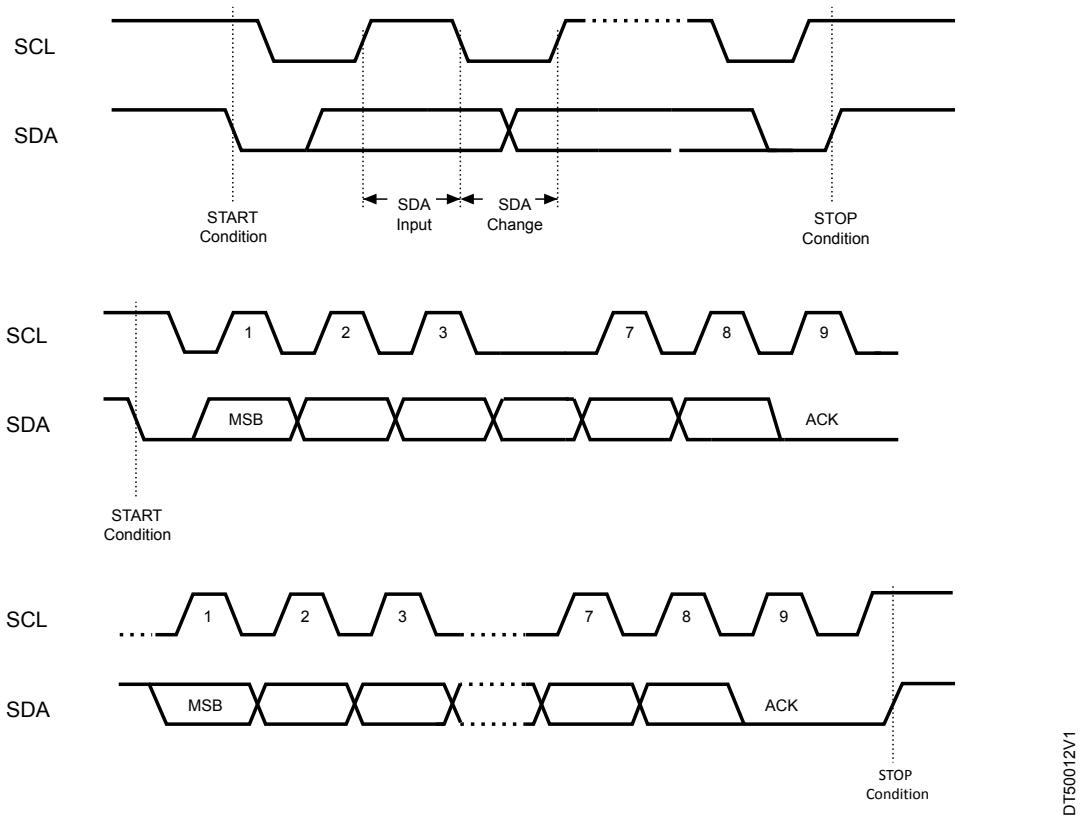

4.1 Start condition

Start is identified by a falling edge of serial data (SDA) while serial clock (SCL) is stable in the high state. A start condition must precede any data transfer instruction. The device continuously monitors (except during a write cycle) serial data (SDA) and serial clock (SCL) for a start condition.

4.2 Stop condition

Stop is identified by a rising edge of serial data (SDA) while serial clock (SCL) is stable in the high state. A stop condition terminates communication between the device and the bus master. A read instruction that is followed by NoAck can be followed by a stop condition to force the device into the standby mode.

A stop condition at the end of a write instruction triggers the internal write cycle.

4.3 Data input

During data input, the device samples serial data (SDA) on the rising edge of serial clock (SCL). For correct device operation, serial data (SDA) must be stable during the rising edge of serial clock (SCL), and the serial data (SDA) signal must change only when serial clock (SCL) is driven low.

4.4 Acknowledge bit (ACK)

The acknowledge bit is used to indicate a successful byte transfer. The bus transmitter, whether it be bus master or slave device, releases serial data (SDA) after sending eight bits of data. During the 9th clock pulse period, the receiver pulls serial data (SDA) low to acknowledge the receipt of the eight data bits.

4.5 Device addressing

To start communication between the bus master and the slave device, the bus master must initiate a Start condition. Following this, the bus master sends the device select code, shown in Table 5 (most significant bit first).

Table 5. Device select code

	Device type identifier(1)				Chip Enable address(2)			$R\overline{W}$
	b7	b6	b5	b4	b3	b2	b1	b0
Device select code when addressing the memory array	1	0	1	0	E2	E1	E0	$R\overline{W}$
Device select code when accessing the identification page	1	0	1	1	E2	E1	E0	$R\overline{W}$

1. *The MSB, b7, is sent first.*
2. *E0, E1 and E2 are compared with the value read on input pins E0, E1 and E2.*

When the device select code is received, the device only responds if the chip enable address is the same as the value on its chip enable E2,E1,E0 inputs.

The 8th bit is the Read/Write bit ($R\overline{W}$). This bit is set to 1 for read and 0 for write operations.

If a match occurs on the device select code, the corresponding device gives an acknowledgement on serial data (SDA) during the 9th bit time. If the device does not match the device select code, it deselects itself from the bus, and goes into standby mode.

5 Instructions

5.1 Write operations

Following a start condition the bus master sends a device select code with the R/$\overline{W}$ bit (R$\overline{W}$) reset to 0. The device acknowledges this, as shown in Figure 10, and waits for two address byte. The device responds to each address byte with an acknowledge bit, and then waits for the data byte.

Table 6. Most significant address byte

A15	A14	A13	A12	A11	A10	A9	A8

Table 7. Least significant address byte

A7	A6	A5	A4	A3	A2	A1	A0

When the bus master generates a stop condition immediately after a data byte Ack bit (in the “10th bit” time slot), either at the end of a byte write or a page write, the internal write cycle t_W is triggered. A stop condition at any other time slot does not trigger the internal write cycle.

After the stop condition and the successful completion of an internal write cycle (t_W), the device internal address counter is automatically incremented to point to the next byte after the last modified byte.

During the internal write cycle, serial data (SDA) is disabled internally, and the device does not respond to any requests.

If the write control input ($\overline{WC}$) is driven high, the write instruction is not executed and the accompanying data bytes are *not* acknowledged, as shown in Figure 11.

5.1.1 Byte write

After the device select code and the address bytes, the bus master sends one data byte. If the addressed location is write-protected, by write control ($\overline{WC}$) being driven high, the device replies with NoAck, and the location is not modified. If, instead, the addressed location is not write-protected, the device replies with Ack. The bus master terminates the transfer by generating a stop condition, as shown in Figure 10.

Figure 10. Write mode sequences with $\overline{WC}$ = 0 (data write enabled)

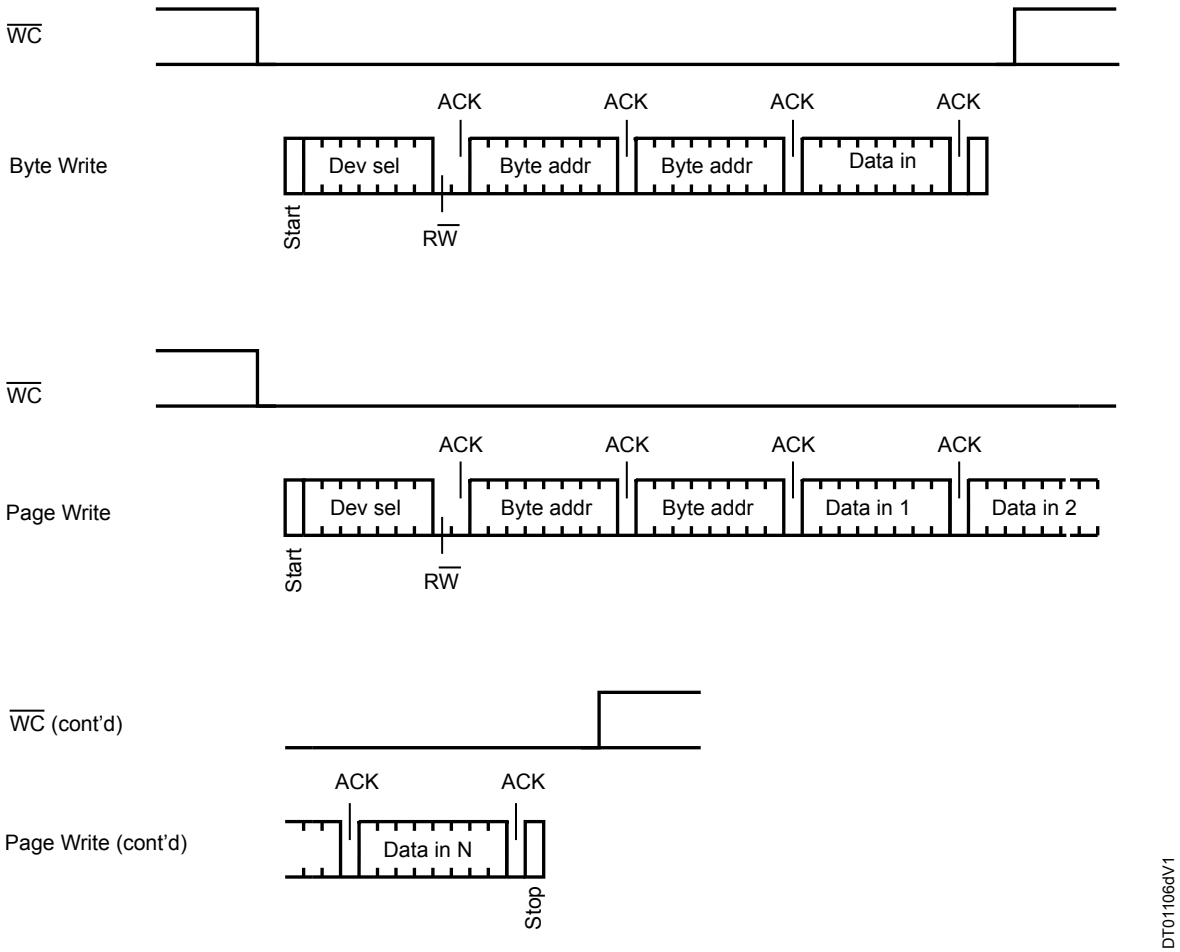

5.1.2 Page write

The page write mode allows up to 32 byte to be written in a single write cycle, provided that they are all located in the same page in the memory: that is, the most significant memory address bits, A15/A5, are the same. If more bytes are sent than fit up to the end of the page, a “roll-over” occurs, i.e. the bytes exceeding the page end are written on the same page, from location 0.

The bus master sends from 1 to 32 byte of data, each of which is acknowledged by the device if write control ($\overline{WC}$) is low. If write control ($\overline{WC}$) is high, the contents of the addressed memory location are not modified, and each data byte is followed by a NoAck, as shown in Figure 11. After each transferred byte, the internal page address counter is incremented.

The transfer is terminated by the bus master generating a stop condition.

Figure 11. Write mode sequences with $\overline{WC}$ = 1 (data write inhibited)

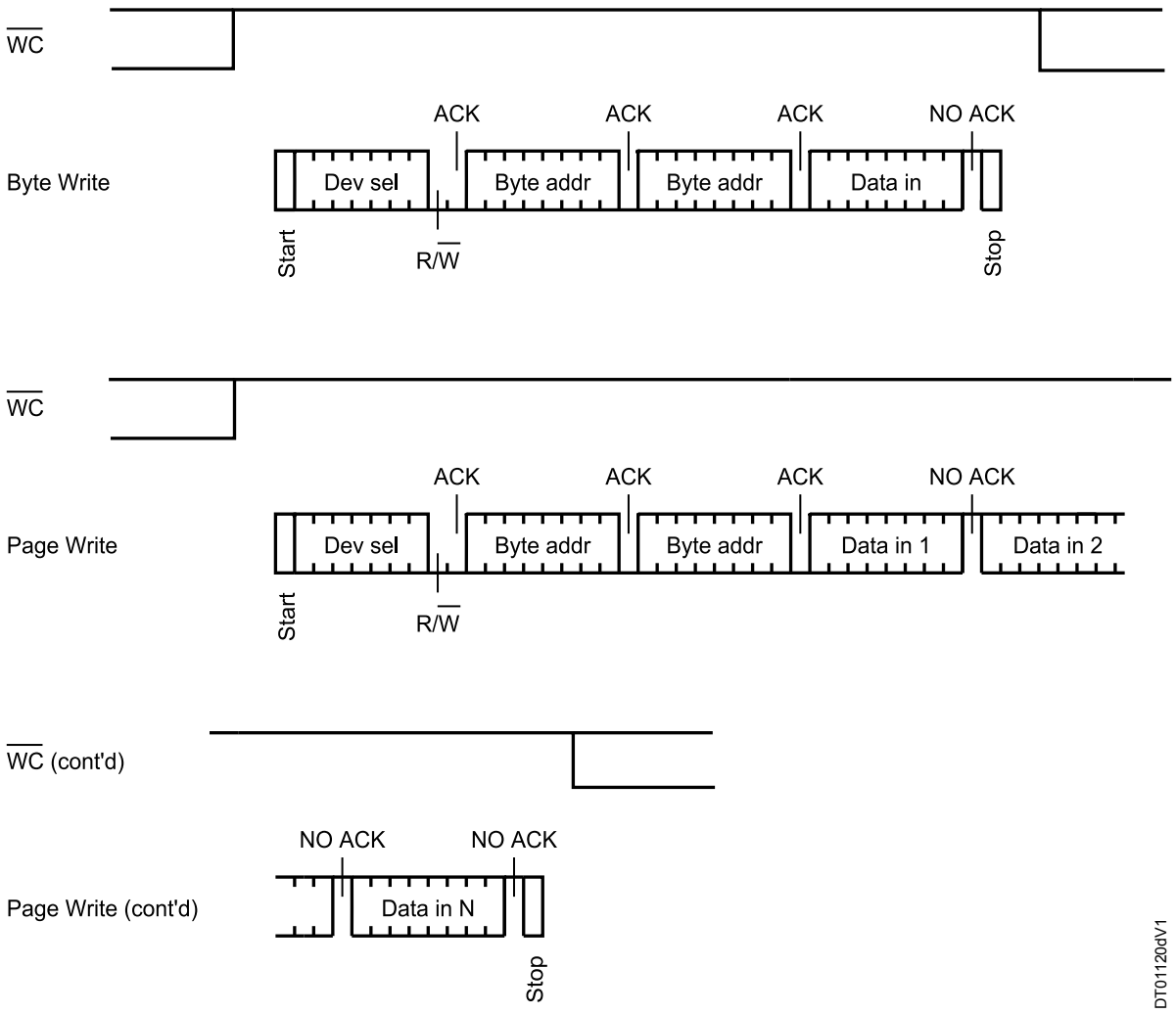

5.1.3 Write identification page (M24C64-D only)

The identification page (32 byte) is an additional page which can be written and (later) permanently locked in read-only mode. It is written by issuing the write identification page instruction. This instruction uses the same protocol and format as page write (into memory array), except for the following differences:

- Device type identifier = 1011b
- MSB address bits A15/A5 are don't care except for address bit A10 which must be ‘0’. LSB address bits A4/A0 define the byte address inside the identification page.

If the identification page is locked, the data bytes transferred during the write identification page instruction are not acknowledged (NoAck).

5.1.4 Lock identification page (M24C64-D only)

The lock identification page instruction (Lock ID) permanently locks the identification page in read-only mode. The lock ID instruction is similar to byte write (into memory array) with the following specific conditions:

- Device type identifier = 1011b
- Address bit A10 must be ‘1’; all other address bits are don't care
- The data byte must be equal to the binary value xxxx xx1x, where x is don't care

5.1.5 ECC (error correction code) and write cycling

The ECC is offered only in devices identified with process letter K, all other devices (identified with a different process letter) do not embed the ECC logic.

The error correction code (ECC) is an internal logic function which is transparent for the I^2C communication protocol.

The ECC logic is implemented on each group of four EEPROM bytes (A group of four bytes is located at addresses [4*N, 4*N+1, 4*N+2, 4*N+3], where N is an integer). Inside a group, if a single bit out of the four bytes happens to be erroneous during a read operation, the ECC detects this bit and replaces it with the correct value. The read reliability is therefore much improved.

Even if the ECC function is performed on groups of four bytes, a single byte can be written/cycled independently. In this case, the ECC function also writes/cycles the three other bytes located in the same group (A group of four bytes is located at addresses [4*N, 4*N+1, 4*N+2, 4*N+3], where N is an integer). As a consequence, the maximum cycling budget is defined at group level and the cycling can be distributed over the 4 bytes of the group: the sum of the cycles seen by byte0, byte1, byte2 and byte3 of the same group must remain below the maximum value defined Table 14.

5.1.6 Minimizing write delays by polling on ACK

During the internal Write cycle, the device disconnects itself from the bus, and writes a copy of the data from its internal latches to the memory cells. The maximum write time (t_W) is shown in AC characteristics tables in Section 8 DC and AC parameters, but the typical time is shorter. To make use of this, a polling sequence can be used by the bus master.

The sequence, as shown in Figure 12, is:

- Initial condition: a write cycle is in progress.
- Step 1: the bus master issues a Start condition followed by a device select code (the first byte of the new instruction).
- Step 2: if the device is busy with the internal write cycle, no Ack is returned and the bus master goes back to step 1. If the device has terminated the internal write cycle, it responds with an Ack, indicating that the device is ready to receive the second part of the instruction (the first byte of this instruction having been sent during Step 1).

Figure 12. Write cycle polling flowchart using ACK

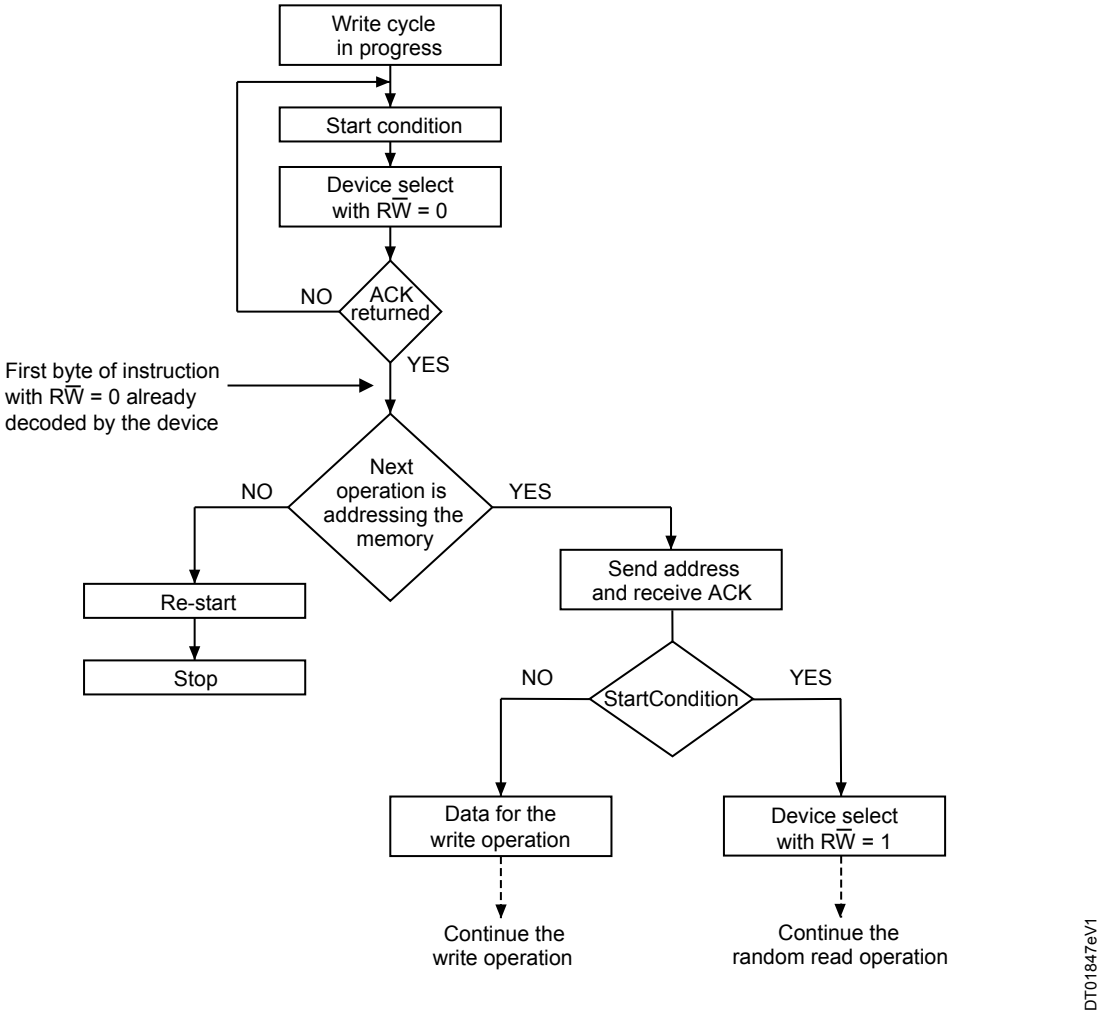

1. The seven most significant bits of the device select code of a random read (bottom right box in the Figure 12) must be identical to the seven most significant bits of the device select code of the write (polling instruction in the Figure 12).

5.2 Read operations

Read operations are performed independently of the state of the write control ($\overline{WC}$) signal.

After the successful completion of a read operation, the device internal address counter is incremented by one, to point to the next byte address.

For the read instructions, after each byte read (data out), the device waits for an acknowledgement (data in) during the 9th bit time. If the bus master does not acknowledge during this 9th time, the device terminates the data transfer and switches to its standby mode after a stop condition.

Figure 13. Read mode sequences

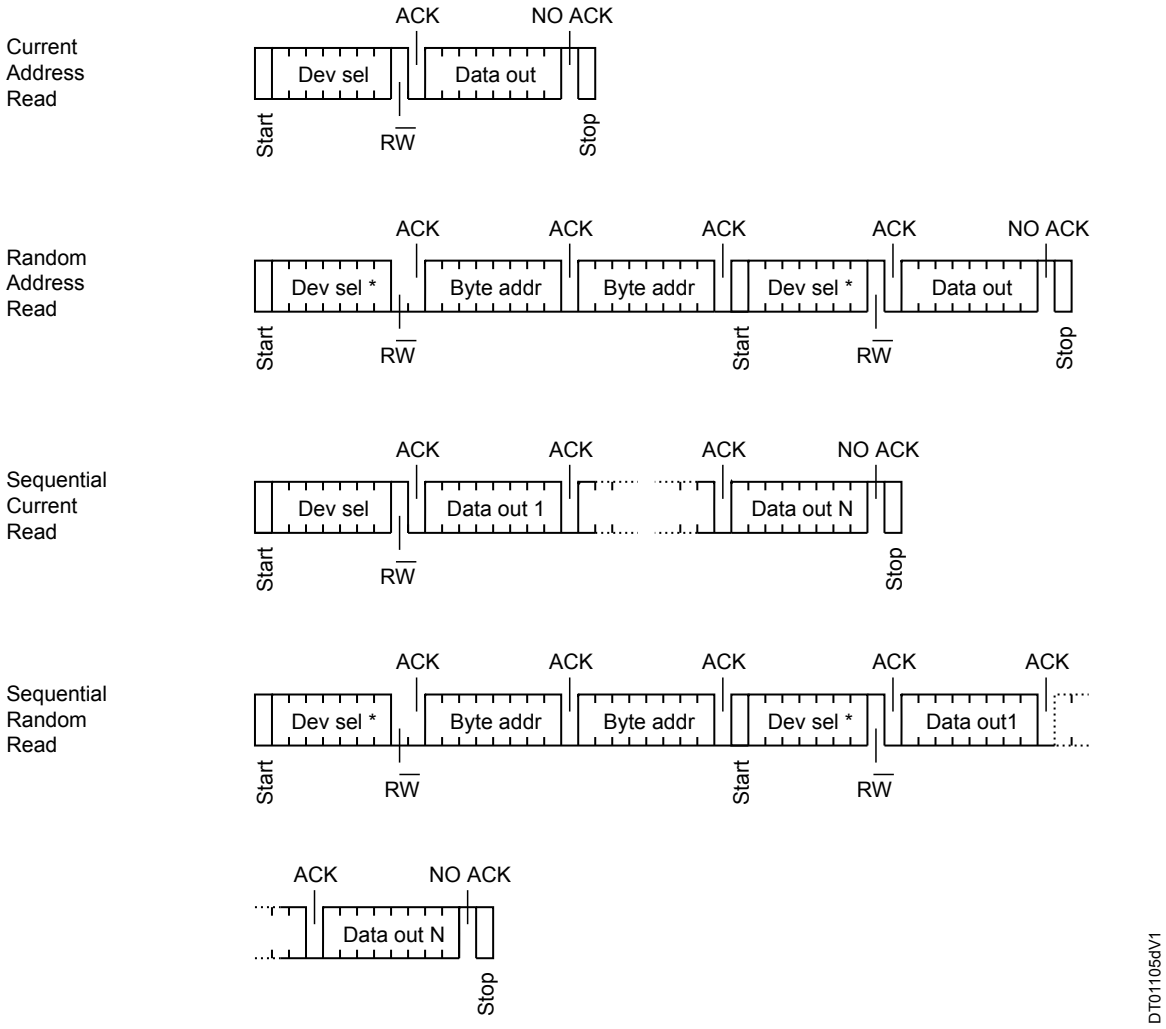

Note: The seven most significant bits of the first device select code of a random read must be identical to the seven most significant bits of the device select code of the write.

5.2.1 Random address read

A dummy write is first performed to load the address into this address counter (as shown in Figure 13) but without sending a stop condition. Then, the bus master sends another start condition, and repeats the device select code, with the R$\overline{W}$ bit set to 1. The device acknowledges this, and outputs the contents of the addressed byte. The bus master must not acknowledge the byte, and terminates the transfer with a stop condition.

5.2.2 Current address read

For the current address read operation, following a start condition, the bus master only sends a device select code with the R/W bit set to 1. The device acknowledges this, and outputs the byte addressed by the internal address counter. The counter is then incremented. The bus master terminates the transfer with a stop condition, as shown in Figure 13, without acknowledging the byte.

Note that the address counter value is defined by instructions accessing either the memory or the Identification page. When accessing the Identification page, the address counter value is loaded with the byte location in the Identification page, therefore the next Current Address Read in the memory uses this new address counter value. When accessing the memory, it is safer to always use the Random Address Read instruction (this instruction loads the address counter with the byte location to read in the memory, see Section 5.2.1 Random address read) instead of the Current Address Read instruction.

5.2.3 Sequential read

This operation can be used after a current address read or a random address read. The bus master does acknowledge the data byte output, and sends additional clock pulses so that the device continues to output the next byte in sequence. To terminate the stream of bytes, the bus master must not acknowledge the last byte, and must generate a Stop condition, as shown in Figure 13.

The output data comes from consecutive addresses, with the internal address counter automatically incremented after each byte output. After the last memory address, the address counter “rolls-over”, and the device continues to output data from memory address 00h.

5.2.4 Read identification page (M24C64-D only)

The Identification Page (32 bytes) is an additional page which can be written and (later) permanently locked in Read-only mode.

The identification page can be read by issuing an read identification page instruction. This instruction uses the same protocol and format as the random address read (from memory array) with device type identifier defined as 1011b. The MSB address bits A15/A5 are don't care, the LSB address bits A4/A0 define the byte address inside the identification page. The number of bytes to read in the ID page must not exceed the page boundary (e.g.: when reading the identification page from location 10d, the number of bytes should be less than or equal to 22, as the ID page boundary is 32 bytes).

5.2.5 Read the lock status (M24C64-D only)

The locked/unlocked status of the identification page can be checked by transmitting a specific truncated command [identification page write instruction + one data byte] to the device. The device returns an acknowledge bit if the identification page is unlocked, otherwise a NoAck bit if the identification page is locked.

Right after this, it is recommended to transmit to the device a start condition followed by a stop condition, so that:

- Start: the truncated command is not executed because the start condition resets the device internal logic,
- Stop: the device is then set back into standby mode by the stop condition.

6 Initial delivery state

The device is delivered with all the memory array bits and identification page bits set to 1 (each byte contains FFh).

When delivered in unsawn wafer, all memory bits are set to 1 (each memory byte contains FFh) except the last byte located at address 1FFFh which is written with the value 22h.

7 Maximum rating

Stressing the device outside the ratings listed in Table 8 may cause permanent damage to the device. These are stress ratings only, and operation of the device at these, or any other conditions outside those indicated in the operating sections of this specification, is not implied. Exposure to absolute maximum rating conditions for extended periods may affect device reliability.

Table 8. Absolute maximum ratings

Symbol	Parameter	Min.	Max.	Unit
-	Ambient operating temperature	-40	130	°C
T_{STG}	Storage temperature	-65	150	°C
T_{LEAD}	Lead temperature during soldering	see note (1)		°C
I_{OL}	DC output current (SDA = 0)	–	5	mA
V_{IO}	Input or output range	-0.50	6.5	V
V_{CC}	Supply voltage	-0.50	6.5	V
V_{ESD}	Electrostatic pulse (human body model)(2)	–	3000(3)	V

1. *Compliant with JEDEC Std J-STD-020 (for small body, Sn-Pb or Pb-free assembly), the ST ECOPACK 7191395 specification, and the European directive on Restrictions of Hazardous Substances (RoHS directive 2011/65/EU of July 2011).*
2. *Positive and negative pulses applied on different combinations of pin connections, according to ANSI/ESDA/JEDEC JS-001 (C1=100 pF, R1=1500 Ω).*
3. *4000 V for devices identified with process letter K.*

8 DC and AC parameters

This section summarizes the operating and measurement conditions, and the DC and AC characteristics of the device.

Table 9. Operating conditions (voltage range W)

Symbol	Parameter	Min.	Max.	Unit
V_{CC}	Supply voltage	2.5	5.5	V
T_A	Ambient operating temperature	–40	85	°C
f_C	Operating clock frequency	-	1	MHz

Table 10. Operating conditions (voltage range R)

Symbol	Parameter	Min.	Max.	Unit
V_{CC}	Supply voltage	1.8	5.5	V
T_A	Ambient operating temperature	–40	85	°C
f_C	Operating clock frequency	-	1	MHz

Table 11. Operating conditions (voltage range F)

Symbol	Parameter	Min.		Max.	Unit
V_{CC}	Supply voltage	1.6[1]	1.7	5.5	V
T_A	Ambient operating temperature: READ	-40	-40	85	°C
	Ambient operating temperature: WRITE	0	-40	85	
f_C	Operating clock frequency, $V_{CC} \geq 1.6$ V[1]	-		400	kHz
	Operating clock frequency, $V_{CC} \geq 1.7$ V	-		1000	

1. *Only for devices identified with process letter T.*

Table 12. AC measurement conditions

Symbol	Parameter	Min.	Max.	Unit
C_{bus}	Load capacitance	-	100	pF
-	SCL input rise/fall time, SDA input fall time	-	50	ns
-	Input levels	0.2 V_{CC} to 0.8 V_{CC}		V
-	Input and output timing reference levels	0.3 V_{CC} to 0.7 V_{CC}		V

Figure 14. AC measurement I/O waveform

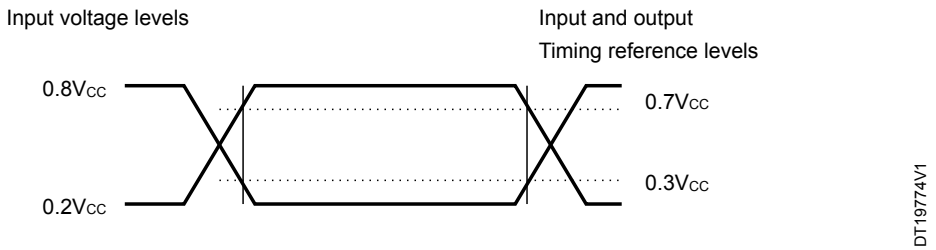

Table 13. Input parameters

Symbol	Parameter[1]	Test condition	Min.	Max.	Unit
C_{IN}	Input capacitance (SDA)	-	-	8	pF
C_{IN}	Input capacitance (other pins)	-	-	6	pF
Z_L	Input impedance (E2, E1, E0,$\overline{WC}$)[2]	V_{IN} < 0.3 V_{CC}	30	-	kΩ
Z_H		V_{IN} > 0.7 V_{CC}	500	-	kΩ

1. *Evaluated by characterization – Not tested in production.*
2. *Input impedance when the memory is selected (after a start condition).*

Table 14. Cycling performance

Symbol	Parameter	Test condition	Max.	Unit
Ncycle	Write cycle endurance[1]	$T_A \leq$ 25 °C, V_{CC}(min) < V_{CC} < V_{CC}(max)	4,000,000	Write cycle[2]
		T_A = 85 °C, V_{CC}(min) < V_{CC} < V_{CC}(max)	1,200,000	

1. *The Write cycle endurance is evaluated by characterization and qualification. For devices embedding the ECC functionality (see Section 5.1.5 ECC (error correction code) and write cycling), the write cycle endurance is defined for group of four bytes located at addresses [4*N, 4*N+1, 4*N+2, 4*N+3] where N is an integer.*
2. *A Write cycle is executed when either a page write, a byte write, a write Identification Page or a lock identification page instruction is decoded. When using the byte write, the Page Write or the write identification page, refer also to Section 5.1.5 ECC (error correction code) and write cycling*

Table 15. Memory cell data retention

Parameter	Test condition	Min.	Unit
Data retention[1]	T_A = 55 °C	200	Year

1. *The data retention behavior is checked in production, while the data retention limit defined in this table is extracted from characterization and qualification results.*

Table 16. DC characteristics (M24C64-W)

Symbol	Parameter	Test conditions (in addition to those in Table 9 and Table 12)	Min.	Max.	Unit
I_{LI}	Input leakage current (Ei, SCL, SDA)	$V_{IN} = V_{SS}$ or V_{CC}, device in standby mode	-	± 2	µA
I_{LO}	Output leakage current	SDA in Hi-Z, external voltage applied on SDA: V_{SS} or V_{CC}	-	± 2	µA
I_{CC}	Supply current (Read)	f_C = 400 kHz, 2.5 V ≤ V_{CC} ≤ 5.5 V	-	2	mA
		f_C = 1 MHz, 2.5 V ≤ V_{CC} ≤ 5.5 V	-	2.5	
I_{CC0}(1)	Supply current (Write)	During t_W, 2.5 V ≤ V_{CC} ≤ 5.5 V	-	2.5	mA
I_{CC1}	Standby supply current	Device not selected(2), $V_{IN} = V_{SS}$ or V_{CC}, V_{CC} = 2.5 V	-	2	µA
		Device not selected(2), $V_{IN} = V_{SS}$ or V_{CC}, V_{CC} = 5.5 V	-	3	µA
V_{IL}	Input low voltage (SCL, SDA, $\overline{WC}$,Ei) (3)	-	–0.45	0.3 V_{CC}	V
V_{IH}	Input high voltage (SCL, SDA)	-	0.7 V_{CC}	6.5	V
	Input high voltage ($\overline{WC}$, Ei) (4)	-	0.7 V_{CC}	V_{CC}+ 0.6	
V_{OL}	Output low voltage	I_{OL} = 2.1 mA, V_{CC} = 2.5 V or I_{OL} = 3 mA, V_{CC} = 5.5 V	-	0.4	V

1. *Evaluated by characterization - Not tested in production.*
2. *The device is not selected after power-up, after a read instruction (after the stop condition), or after the completion of the internal write cycle t_W (t_W is triggered by the correct decoding of a write instruction).*
3. *Ei inputs should be tied to V_{SS} (see Section 2.3 Chip enable (E2, E1, E0)).*
4. *Ei inputs should be tied to V_{CC} (see Section 2.3 Chip enable (E2, E1, E0))*

Table 17. DC characteristics (M24C64-R)

Symbol	Parameter	Test conditions[1] (in addition to those in Table 10)	Min.	Max.	Unit
I_{LI}	Input leakage current (Ei, SCL, SDA)	$V_{IN} = V_{SS}$ or V_{CC}, device in standby mode	-	± 2	µA
I_{LO}	Output leakage current	SDA in Hi-Z, external voltage applied on SDA: V_{SS} or V_{CC}	-	± 2	µA
I_{CC}	Supply current (Read)	V_{CC} = 1.8 V, f_c= 400 kHz	-	0.8	mA
		f_c= 1 MHz	-	2.5	
I_{CC0}[2]	Supply current (Write)	During t_W, 1.8 V ≤ V_{CC} ≤ 2.5 V	-	1.5	mA
I_{CC1}	Standby supply current	Device not selected,[3] $V_{IN} = V_{SS}$ or V_{CC}, V_{CC} = 1.8 V	-	1	µA
V_{IL}	Input low voltage (SCL, SDA, $\overline{WC}$, Ei) [4]	1.8 V ≤ V_{CC} ≤ 2.5 V	-0.45	0.25 V_{CC}	V
V_{IH}	Input high voltage (SCL, SDA)	1.8 V ≤ V_{CC} < 2.5 V	0.75 V_{CC}	6.5	V
	Input high voltage ($\overline{WC}$, Ei) [5]	1.8 V ≤ V_{CC} < 2.5 V	0.75 V_{CC}	V_{CC} + 0.6	V
V_{OL}	Output low voltage	I_{OL} = 1 mA, V_{CC} = 1.8 V	-	0.2	V

1. *If the application uses the voltage range R device with 2.5 V ≤ Vcc ≤ 5.5 V and -40 °C < TA < +85 °C, refer to Table 16 instead of this table.*
2. *Evaluated by characterization - Not tested in production.*
3. *The device is not selected after power-up, after a read instruction (after the stop condition), or after the completion of the internal write cycle t_W (t_W is triggered by the correct decoding of a write instruction).*
4. *Ei inputs should be tied to V_{SS} (see Section 2.3 Chip enable (E2, E1, E0))*
5. *Ei inputs should be tied to V_{CC} (see Section 2.3 Chip enable (E2, E1, E0))*

Table 18. DC characteristics (M24C64-F, M24C64-DF)

Symbol	Parameter	Test conditions[1] (in addition to those in Table 11)	Min.	Max.	Unit
I_{LI}	Input leakage current (Ei, SCL, SDA)	$V_{IN} = V_{SS}$ or V_{CC} device in Standby mode	-	± 2	µA
I_{LO}	Output leakage current	SDA in Hi-Z, external voltage applied on SDA: V_{SS} or V_{CC}	-	± 2	µA
I_{CC}	Supply current (Read)	V_{CC} = 1.6 V or 1.7 V, f_c= 400 kHz	-	0.8	mA
		f_C = 1 MHz	-	2.5	
I_{CC0}[2]	Supply current (Write)	During t_W, $V_{CC} \leq 1.8$ V	-	1.5	mA
I_{CC1}	Standby supply current	Device not selected[3], $V_{IN} = V_{SS}$ or V_{CC}, V_{CC} = 1.6 V or 1.7 V	-	1	µA
V_{IL}	Input low voltage (SCL, SDA, $\overline{WC}$, Ei) [4]	$V_{CC} < 2.5$ V	-0.45	0.25 V_{CC}	V
V_{IH}	Input high voltage (SCL, SDA)	$V_{CC} < 2.5$ V	0.75 V_{CC}	6.5	V
	Input high voltage ($\overline{WC}$, Ei) [5]	$V_{CC} < 2.5$ V	0.75 V_{CC}	V_{CC} + 0.6	V
V_{OL}	Output low voltage	I_{OL} = 1 mA, V_{CC} = 1.6 V or 1.7 V	-	0.2	V

1. *If the application uses the voltage range F device with 2.5 V ≤ V_{CC} ≤ 5.5 V and -40 °C < TA < +85 °C, refer to Table 16 instead of this table.*
2. *Evaluated by characterization - Not tested in production.*
3. *The device is not selected after power-up, after a read instruction (after the stop condition), or after the completion of the internal write cycle t_W (t_W is triggered by the correct decoding of a write instruction).*
4. *Ei inputs should be tied to V_{SS} (see Section 2.3 Chip enable (E2, E1, E0))*
5. *Ei inputs should be tied to V_{CC} (see Section 2.3 Chip enable (E2, E1, E0))*

Table 19. 400 kHz AC characteristics

Symbol	Alt.	Parameter	Min.	Max.	Unit
f_C	f_{SCL}	Clock frequency	-	400	kHz
t_{CHCL}	t_{HIGH}	Clock pulse width high	600	-	ns
t_{CLCH}	t_{LOW}	Clock pulse width low	1300	-	ns
t_{QL1QL2}(1)	t_F	SDA (out) fall time	20(2)	300	ns
t_{XH1XH2}	t_R	Input signal rise time	(3)	(3)	ns
t_{XL1XL2}	t_F	Input signal fall time	(3)	(3)	ns
t_{DXCH}	$t_{SU:DAT}$	Data in set up time	100	-	ns
t_{CLDX}	$t_{HD:DAT}$	Data in hold time	0	-	ns
t_{CLQX}(4)	t_{DH}	Data out hold time	50	-	ns
t_{CLQV}(5)	t_{AA}	Clock low to next data valid (access time)	-	900	ns
t_{CHDL}	$t_{SU:STA}$	Start condition setup time	600	-	ns
t_{DLCL}	$t_{HD:STA}$	Start condition hold time	600	-	ns
t_{CHDH}	$t_{SU:STO}$	Stop condition set up time	600	-	ns
t_{DHDL}	t_{BUF}	Time between Stop condition and next Start condition	1300	-	ns
t_{WLDL}(1)(6)	tSU:WC	$\overline{WC}$ set up time (before the start condition)	0	-	µs
t_{DHWH}(1)(7)	tHD:WC	WC hold time (after the stop condition)	1	-	
t_W	t_{WR}	Write time	-	5	ms
t_{NS}(1)	-	Pulse width ignored (input filter on SCL and SDA) - single glitch	-	50	ns

1. *Evaluated by characterization - Not tested in production.*
2. *With C_L = 10 pF.*
3. *There is no min. or max. values for the input signal rise and fall times. It is however recommended by the I²C specification that the input signal rise and fall times be more than 20 ns and less than 300 ns when f_C < 400 kHz.*
4. *To avoid spurious start and stop conditions, a minimum delay is placed between SCL=1 and the falling or rising edge of SDA.*
5. *t_{CLQV} is the time (from the falling edge of SCL) required by the SDA bus line to reach either 0.3 V_{CC} or 0.7 V_{CC}, assuming that R_{bus} × C_{bus} time constant is within the values specified in Figure 15.*
6. *$\overline{WC}$=0 set up time condition to enable the execution of a WRITE command*
7. *$\overline{WC}$=0 hold time condition to enable the execution of a WRITE command.*

Table 20. 1 MHz AC characteristics

Symbol	Alt.	Parameter	Min.	Max.	Unit
f_C	f_{SCL}	Clock frequency	-	1	MHz
t_{CHCL}	t_{HIGH}	Clock pulse width high	260	-	ns
t_{CLCH}	t_{LOW}	Clock pulse width low	500	-	ns
t_{XH1XH2}	t_R	Input signal rise time	(1)	(1)	ns
t_{XL1XL2}	t_F	Input signal fall time	(1)	(1)	ns
t_{QL1QL2}(2)	t_F	SDA (out) fall time	20(3)	120	ns
t_{DXCH}	$t_{SU:DAT}$	Data in setup time	50	-	ns
t_{CLDX}	$t_{HD:DAT}$	Data in hold time	0	-	ns
t_{CLQX}(4)	t_{DH}	Data out hold time	50	-	ns
t_{CLQV}(5)	t_{AA}	Clock low to next data valid (access time)	-	450	ns
t_{CHDL}	$t_{SU:STA}$	Start condition setup time	250	-	ns
t_{DLCL}	$t_{HD:STA}$	Start condition hold time	250	-	ns
t_{CHDH}	$t_{SU:STO}$	Stop condition setup time	250	-	ns
t_{DHDL}	t_{BUF}	Time between Stop condition and next Start condition	500	-	ns
t_{WLDL}(2)(6)	$t_{SU:WC}$	$\overline{WC}$ set up time (before the Start condition)	0	-	µs
t_{DHWH}(2)(7)	$t_{HD:WC}$	$\overline{WC}$ hold time (after the Stop condition)	1	-	µs
t_W	t_{WR}	Write time	-	5	ms
t_{NS}(2)	-	Pulse width ignored (input filter on SCL and SDA)	-	50	ns

1. *There is no min. or max. values for the input signal rise and fall times. It is however recommended by the I²C specification that the input signal rise and fall times be less than 120 ns when f_C < 1 MHz.*
2. *Evaluated by characterization - Not tested in production.*
3. *With C_L = 10 pF.*
4. *To avoid spurious start and stop conditions, a minimum delay is placed between SCL=1 and the falling or rising edge of SDA.*
5. *t_{CLQV} is the time (from the falling edge of SCL) required by the SDA bus line to reach either 0.3 V_{CC} or 0.7 V_{CC}, assuming that the Rbus × Cbus time constant is within the values specified in Figure 16.*
6. *$\overline{WC}$=0 set up time condition to enable the execution of a WRITE command.*
7. *$\overline{WC}$=0 hold time condition to enable the execution of a WRITE command.*

Figure 15. Maximum R_{bus} value versus bus parasitic capacitance (C_{bus}) for an I^2C bus at maximum frequency f_C = 400 kHz

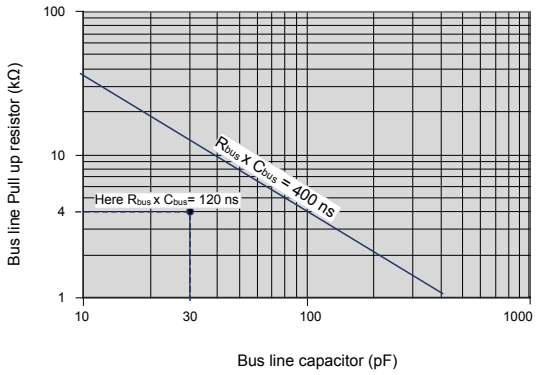

The R_{bus} x C_{bus} time constant must be below the 400 ns time constant line represented on the left

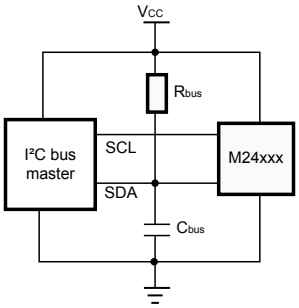

DT37916V3

Figure 16. Maximum R_{bus} value versus bus parasitic capacitance (C_{bus}) for an I^2C bus at maximum frequency f_C = 1 MHz

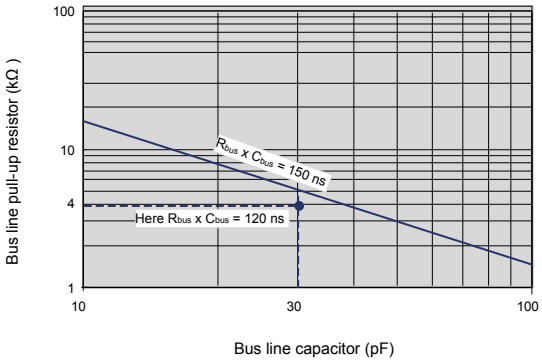

The R_{bus} x C_{bus} time constant must be below the 150 ns time constant line represented on the left

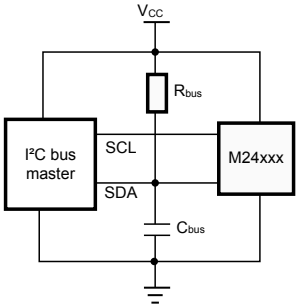

DT19745V6

Figure 17. AC waveforms

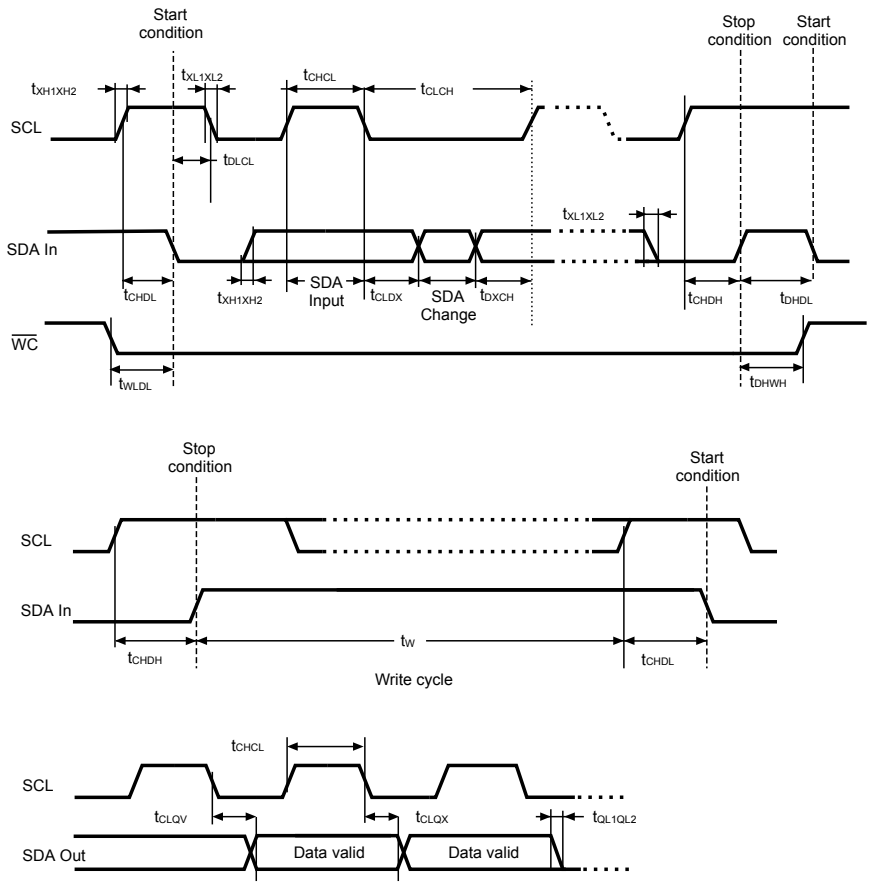

9 Package information

In order to meet environmental requirements, ST offers these devices in different grades of ECOPACK packages, depending on their level of environmental compliance. ECOPACK specifications, grade definitions and product status are available at: www.st.com.

ECOPACK is an ST trademark.

9.1 WLCSP4 (CU) ultra thin package information

This WLCSP4 is a 4-bump, 0.795 x 0.674 mm, 0.400 mm pitch, ultra thin wafer level chip scale package.

Figure 18. WLCSP4 (CU) - Outline

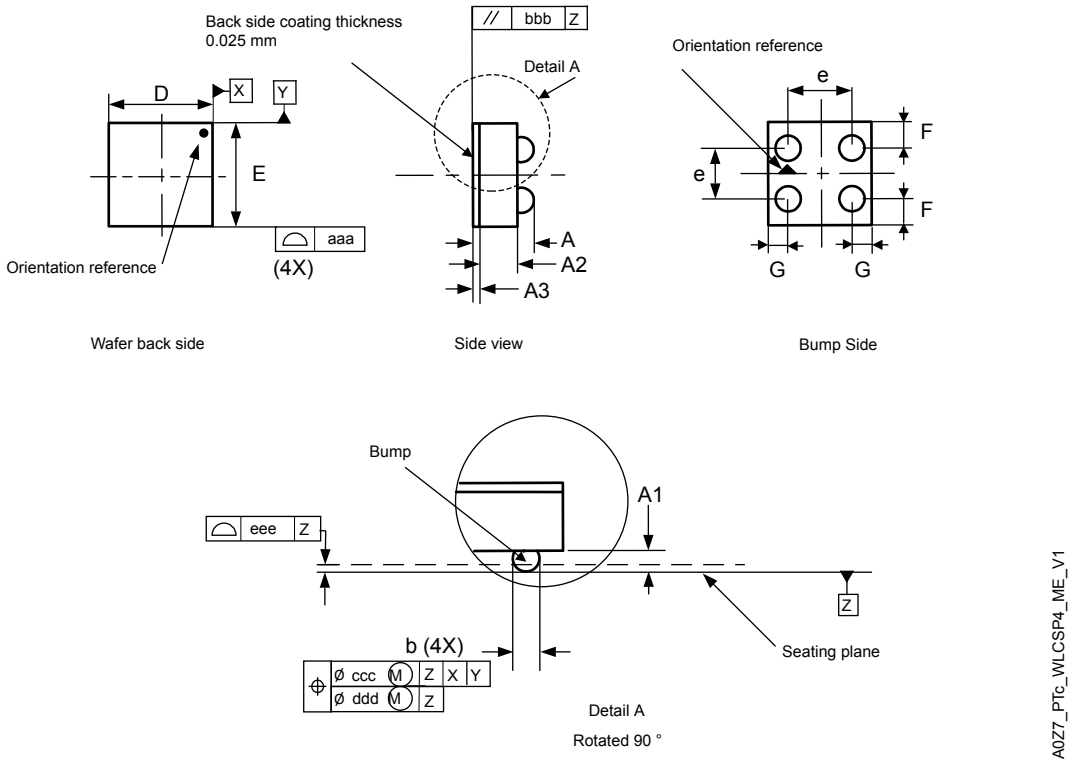

1. Drawing is not to scale.
2. Primary datum Z and seating plane are defined by the spherical crowns of the bump.
3. Bump position designation per JESD 95-1, SPP-010.

Table 21. WLCSP4 (CU) - Mechanical data

Symbol	millimeters			inches[1]		
	Min	Typ	Max	Min	Typ	Max
A	0.285	0.315	0.345	0.0112	0.0124	0.0136
A1	-	0.115	-	-	0.0045	-
A2	-	0.175	-	-	0.0069	-
A3 (BSC)	-	0.025	-	-	0.0010	-
b[2][3]	-	0.160	-	-	0.0063	-
D	-	0.795	0.815	-	0.0313	0.0321
E	-	0.674	0.694	-	0.0265	0.0273
e	-	0.400	-	-	0.0157	-
F	-	0.137	-	-	0.0054	-
G	-	0.198	-	-	0.0078	-
aaa	-	-	0.110	-	-	0.0043
bbb	-	-	0.110	-	-	0.0043
ccc	-	-	0.110	-	-	0.0043
ddd	-	-	0.060	-	-	0.0024
eee	-	-	0.060	-	-	0.0024

1. *1. Values in inches are converted from mm and rounded to 4 decimal digits.*
2. *2. Dimension is measured at the maximum bump diameter parallel to primary datum Z.*
3. *3. Primary datum Z and seating plane are defined by the spherical crowns of the bump.*

9.1.1 WLCSP4 (CU) package footprint

Figure 19. WLCSP4 (CU) - Footprint example

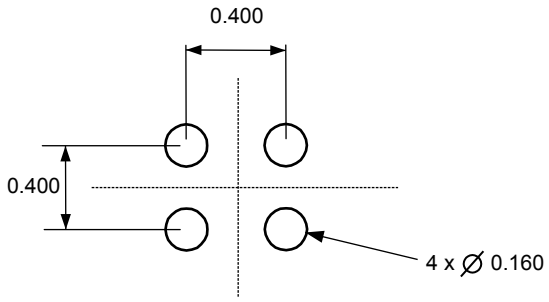

A0Z7_PTc_WLCSP4_FP_V1

1. Dimensions are expressed in millimeters.

9.2 WLCSP5 (CS) package information

This WLCSP is a 5-bump, 0.959 x 1.073 mm, 0.4 mm pitch wafer level chip scale package.

Figure 20. WLCSP5 - Outline

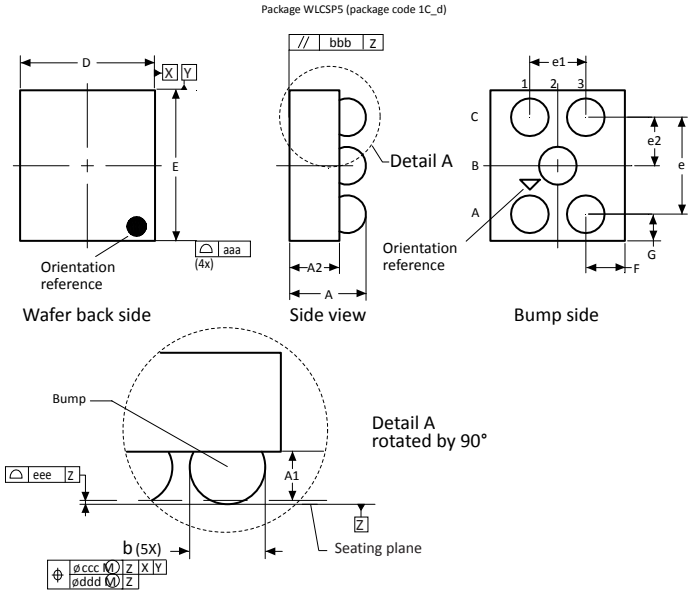

1. Drawing is not to scale.
2. Dimension is measured at the maximum bump diameter parallel to primary datum Z.
3. Primary datum Z and seating plane are defined by the spherical crowns of the bump.

Table 22. WLCSP5 - Mechanical data

Symbol	millimeters			inches[1]		
	Min	Typ	Max	Min	Typ	Max
A	0.455	0.545	0.635	0.0179	0.0215	0.0250
A1	-	0.190	-	-	0.0075	-
A2	-	0.355	-	-	0.0140	-
b[2]	-	0.270	-	-	0.0106	-
D	-	0.959	1.074	-	0.0378	0.0423
E	-	1.073	1.168	-	0.0422	0.0460
e	-	0.693	-	-	0.0273	-
e1	-	0.400	-	-	0.0157	-
e2	-	0.3465	-	-	0.0136	-
F	-	0.280	-	-	0.0110	-
G	-	0.190	-	-	0.0075	-
aaa	-	0.110	-	-	0.0043	-
bbb	-	0.110	-	-	0.0043	-
ccc	-	0.110	-	-	0.0043	-
ddd	-	0.060	-	-	0.0024	-
eee	-	0.060	-	-	0.0024	-

1. *1. Values in inches are converted from mm and rounded to 4 decimal digits.*
2. *2. Dimension is measured at the maximum bump diameter parallel to primary datum Z.*

9.2.1 WLCSP5 (CS) package footprint

Figure 21. WLCSP5 - Footprint example

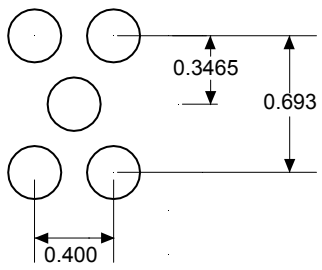

1Cd_WLCSP_FP_V2

1. Dimensions are expressed in millimeters.

9.3 UFDFPN5 (DFN5) package information

UFDFPN5 is a 5-lead, 1.7 × 1.4 mm, 0.55 mm thickness, ultra thin fine pitch dual flat package.

Figure 22. UFDFPN5 - Outline

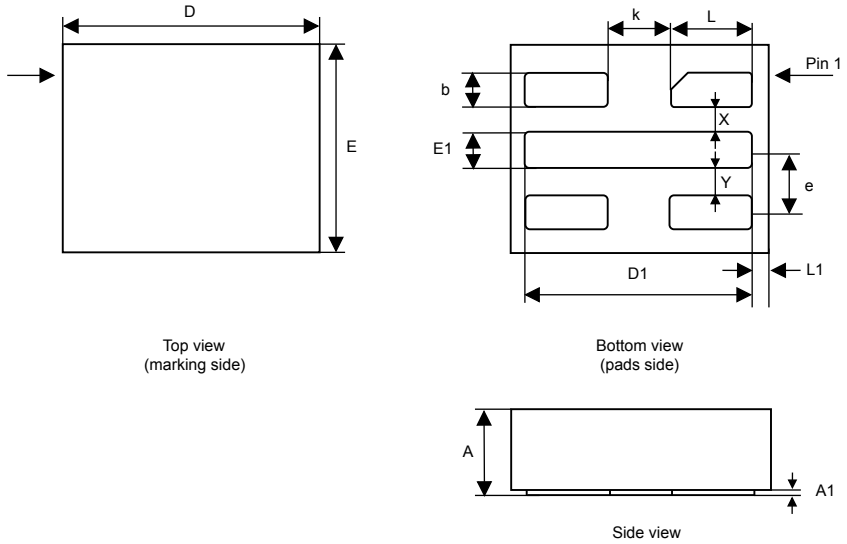

1. Maximum package warpage is 0.05 mm.
2. Exposed copper is not systematic and can appear partially or totally according to the cross section.
3. Drawing is not to scale.
4. On the bottom side, pin 1 is identified by the specific pad shape and, on the top side, pin 1 is defined from the orientation of the marking. When reading the marking, pin 1 is below the upper left package corner.

Table 23. UFDFPN5 - Mechanical data

Symbol	millimeters			inches		
	Min	Typ	Max	Min	Typ	Max
A	0.500	0.550	0.600	0.0197	0.0217	0.0236
A1	0.000	-	0.050	0.0000	-	0.0020
b(1)	0.175	0.200	0.225	0.0069	0.0079	0.0089
D	1.600	1.700	1.800	0.0630	0.0669	0.0709
D1	1.400	1.500	1.600	0.0551	0.0591	0.0630
E	1.300	1.400	1.500	0.0512	0.0551	0.0591
E1	0.175	0.200	0.225	0.0069	0.0079	0.0089
X	-	0.200	-	-	0.0079	-
Y	-	0.200	-	-	0.0079	-
e	-	0.400	-	-	0.0157	-
L	0.500	0.550	0.600	0.0197	0.0217	0.0236
L1	-	0.100	-	-	0.0039	-
k	-	0.400	-	-	0.0157	-

1. Dimension b applies to plated terminal and is measured between 0.15 and 0.30mm from the terminal tip.

9.3.1 UFDFPN5 package footprint

Figure 23. UFDFPN5 - Footprint example

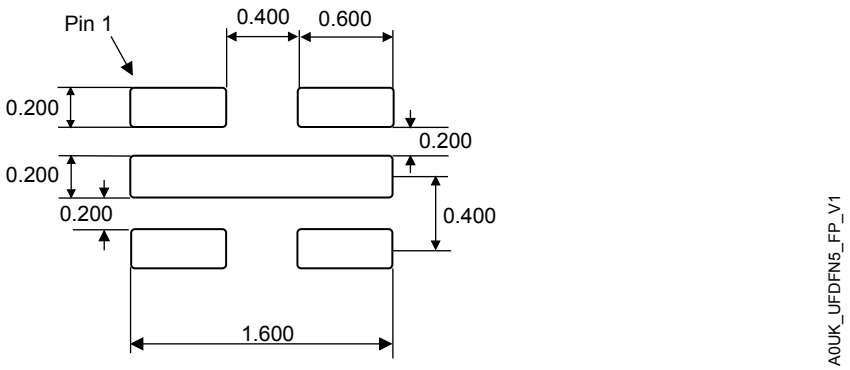

1. Dimensions are expressed in millimeters.

9.4 UFDFPN8 (DFN8) package information

This UFDFPN is a 8-lead, 2 x 3 mm, 0.5 mm pitch ultra thin profile fine pitch dual flat package.

Figure 24. UFDFPN8 - Outline

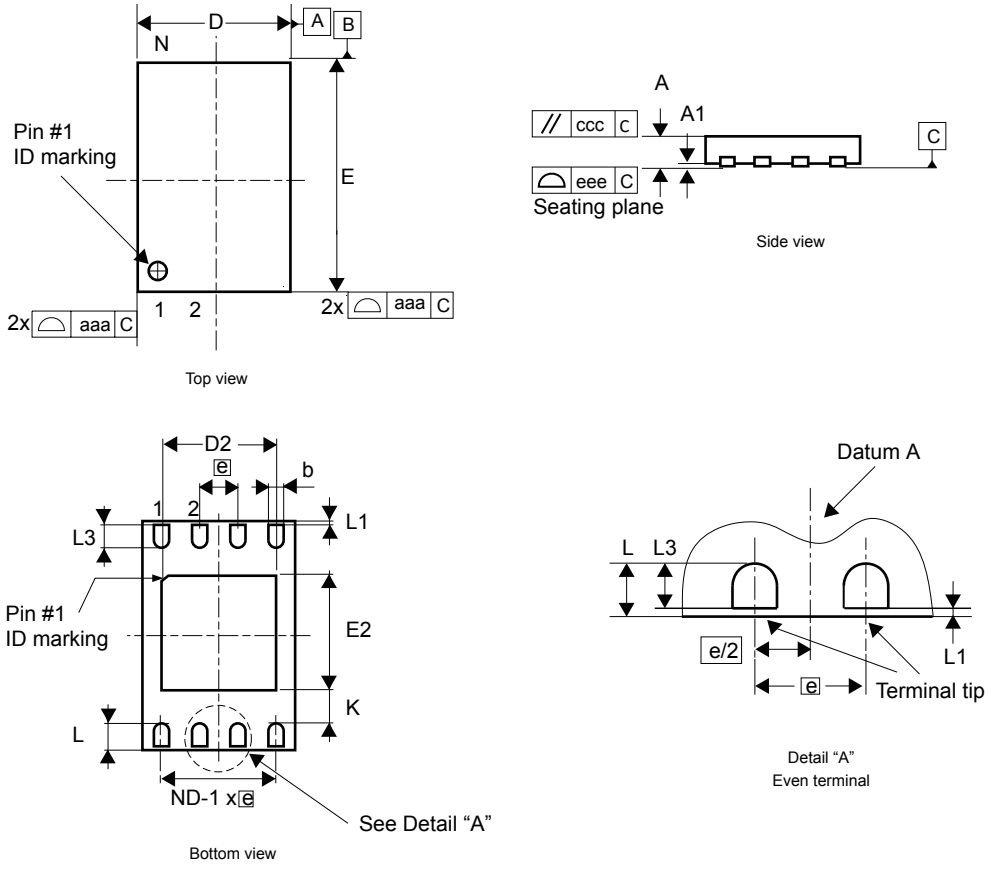

1. Maximum package warpage is 0.05 mm.
2. Exposed copper is not systematic and can appear partially or totally according to the cross section.
3. Drawing is not to scale.
4. The central pad (the area E2 by D2 in the above illustration) must be either connected to V_{SS} or left floating (not connected) in the end application.

Table 24. UFDFPN8 - Mechanical data

Symbol	millimeters			inches[1]		
	Min	Typ	Max	Min	Typ	Max
A	0.450	0.550	0.600	0.0177	0.0217	0.0236
A1	0.000	0.020	0.050	0.0000	0.0008	0.0020
b[2]	0.200	0.250	0.300	0.0079	0.0098	0.0118
D	1.900	2.000	2.100	0.0748	0.0787	0.0827
D2	1.200	-	1.600	0.0472	-	0.0630
E	2.900	3.000	3.100	0.1142	0.1181	0.1220
E2	1.200	-	1.600	0.0472	-	0.0630
e	-	0.500	-	-	0.0197	-
K	0.300	-	-	0.0118	-	-
L	0.300	-	0.500	0.0118	-	0.0197
L1	-	-	0.150	-	-	0.0059
L3	0.300	-	-	0.0118	-	-
aaa	-	-	0.150	-	-	0.0059
bbb	-	-	0.100	-	-	0.0039
ccc	-	-	0.100	-	-	0.0039
ddd	-	-	0.050	-	-	0.0020
eee[3]	-	-	0.080	-	-	0.0031

1. *Values in inches are converted from mm and rounded to four decimal digits.*
2. *Dimension b applies to plated terminal and is measured between 0.15 and 0.30 mm from the terminal tip.*
3. *Applied for exposed die paddle and terminals. Exclude embedding part of exposed die paddle from measuring.*

9.4.1 UFDFPN8 package footprint

Figure 25. UFDFPN8 - Footprint example

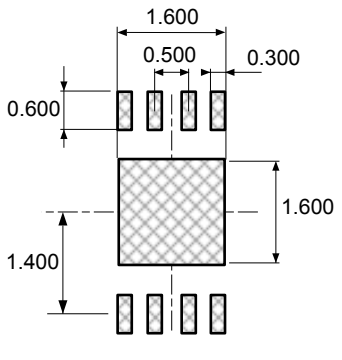

1. Dimensions are expressed in millimeters.

9.5 TSSOP8 package information

This TSSOP is an 8-lead, 3 x 6.4 mm, 0.65 mm pitch, thin shrink small outline package.

Figure 26. TSSOP8 – Outline

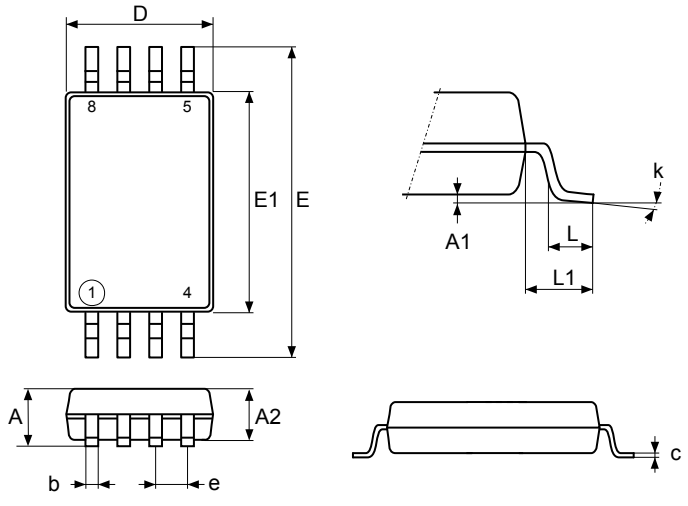

1. Drawing is not to scale.

Table 25. TSSOP8 – Mechanical data

Symbol	millimeters			inches [1]		
	Min.	Typ.	Max.	Min.	Typ.	Max.
A	-	-	1.200	-	-	0.0472
A1	0.050	-	0.150	0.0020	-	0.0059
A2	0.800	1.000	1.050	0.0315	0.0394	0.0413
b	0.190	-	0.300	0.0075	-	0.0118
c	0.090	-	0.200	0.0035	-	0.0079
D[2]	2.900	3.000	3.100	0.1142	0.1181	0.1220
e	-	0.650	-	-	0.0256	-
E	6.200	6.400	6.600	0.2441	0.2520	0.2598
E1[3]	4.300	4.400	0.0177	0.1693	0.1732	0.1772
L	0.450	0.600	0.750	0.0181	0.0236	0.0295
L1	-	1.000	-	-	0.0394	-
k	0°	-	8°	0°	-	8°
aaa	-	-	0.100	-	-	0.0039

1. *Values in inches are converted from mm and rounded to four decimal digits.*
2. *Dimension “D” does not include mold flash, protrusions or gate burrs. Mold flash, protrusions or gate burrs shall not exceed 0.15 mm per side*
3. *Dimension “E1” does not include interlead flash or protrusions. Interlead flash or protrusions shall not exceed 0.25 mm per side.*

Note: The package top may be smaller than the package bottom. Dimensions D and E1 are determinated at the outermost extremes of the plastic body exclusive of mold flash, tie bar burrs, gate burrs and interleads flash, but including any mismatch between the top and bottom of plastic body. Measurement side for mold flash, protusions or gate burrs is bottom side.

9.5.1 TSSOP8 package footprint

Figure 27. TSSOP8 – Footprint example

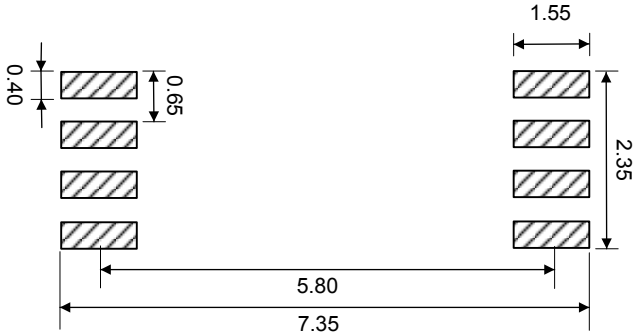

6P_TSSOP8_FP_V2

1. Dimensions are expressed in millimeters.

9.6 SO8N package information

This SO8N is an 8-lead, 4.9 x 6 mm, plastic small outline, 150 mils body width, package.

Figure 28. SO8N – Outline

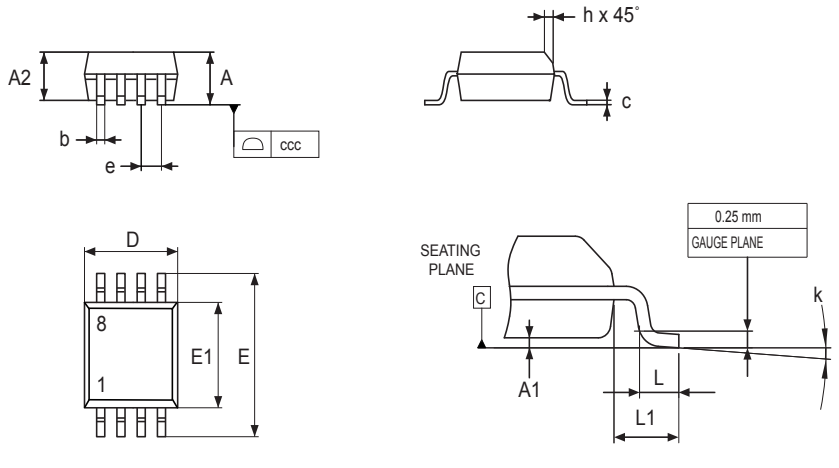

1. Drawing is not to scale.

Table 26. SO8N – Mechanical data

Symbol	millimeters			inches [1]		
	Min.	Typ.	Max.	Min.	Typ.	Max.
A	-	-	1.750	-	-	0.0689
A1	0.100	-	0.250	0.0039	-	0.0098
A2	1.250	-	-	0.0492	-	-
b	0.280	-	0.480	0.0110	-	0.0189
c	0.100	-	0.230	0.0030	-	0.0091
D[2]	4.800	4.900	5.000	0.1890	0.1929	0.1969
E	5.800	6.000	6.200	0.2283	0.2362	0.2441
E1[3]	3.800	3.900	4.000	0.1496	0.1535	0.1575
e	-	1.270	-	-	0.0500	-
h	0.250	-	0.500	0.0098	-	0.0197
k	0°	-	8°	0°	-	8°
L	0.400	-	1.270	0.0157	-	0.0500
L1	-	1.040	-	-	0.0409	-
ccc	-	-	0.100	-	-	0.0039

1. *Values in inches are converted from mm and rounded to four decimal digits.*
2. *Dimension "D" does not include mold flash, protrusions or gate burrs. Mold flash, protrusions or gate burrs shall not exceed 0.15 mm per side*
3. *Dimension "E1" does not include interlead flash or protrusions. Interlead flash or protrusions shall not exceed 0.25 mm per side.*

Note: The package top may be smaller than the package bottom. Dimensions D and E1 are determinated at the outermost extremes of the plastic body exclusive of mold flash, tie bar burrs, gate burrs and interleads flash, but including any mismatch between the top and bottom of plastic body. Measurement side for mold flash, protusions or gate burrs is bottom side.

9.6.1 SO8N package footprint

Figure 29. SO8N - Footprint example

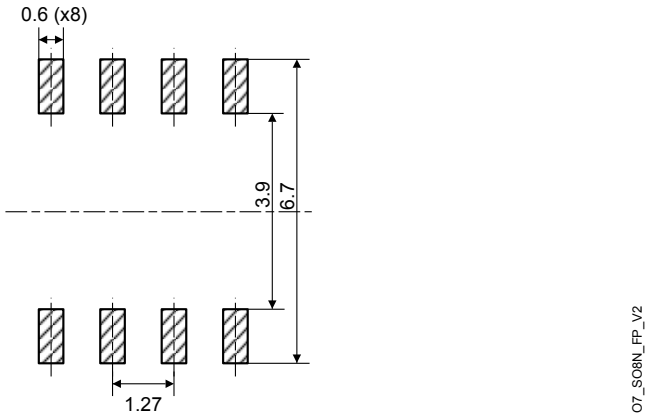

1. Dimensions are expressed in millimeters.

9.7 WLCSP8 (CT) package information

WLCSP8 is a 8 balls, 1.073 x 0.959 mm, 0.4 mm pitch, wafer level chip scale package.

Figure 30. WLCSP8 - Outline

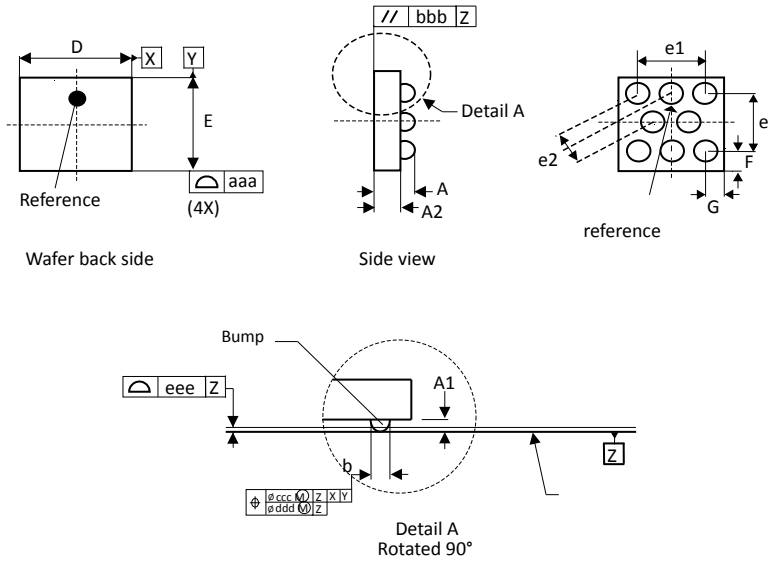

1. Drawing is not to scale.
2. Primary datum Z and seating plane are defined by the spherical crowns of the bump.

Table 27. WLCSP8 - Mechanical data

Symbol	millimeters			inches[1]		
	Min	Typ	Max	Min	Typ	Max
A	0.300	0.315	0.330	0.0118	0.0124	0.0130
A1	-	0.115	-	-	0.0045	-
A2	-	0.200	-	-	0.0079	-
b[2]	-	0.160	-	-	0.0063	-
D	-	1.073	1.093	-	0.0422	0.0430
E	-	0.959	0.979	-	0.0378	0.0385
e	-	0.693	-	-	0.0273	-
e1	-	0.800	-	-	0.0315	-
e2	-	0.400	-	-	0.0157	-
F	-	0.133	-	-	0.0052	-
G	-	0.137	-	-	0.0054	-
aaa	-	0.110	-	-	0.0043	-
bbb	-	0.110	-	-	0.0043	-
ccc	-	0.110	-	-	0.0043	-
ddd	-	0.060	-	-	0.0024	-
eee	-	0.060	-	-	0.0024	-

1. *Values in inches are converted from mm and rounded to 4 decimal digits.*
2. *Dimension is measured at the maximum bump diameter parallel to primary datum Z.*

9.7.1 WLCSP8 package footprint

Figure 31. WLCSP8 - Footprint example

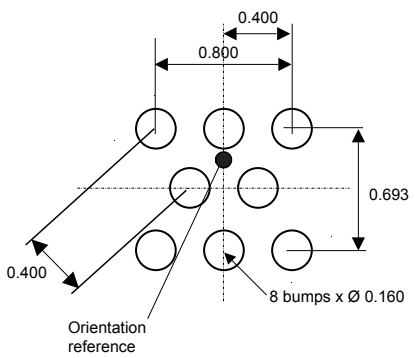

(Vd_WLCSP8_FP_V1

1. Dimensions are expressed in millimetres.

10 Ordering information

Table 28. Ordering information scheme

Example: M24 C64 -D W MC 6 T P /T F

Device type

M24 = I^2C serial access EEPROM

Device function

C64 = 64 Kbit (8192 x 8 bit)

Device family

Blank = Without identification page

D = With identification page

Operating voltage

W = V_{CC} = 2.5 V to 5.5 V

R = V_{CC} = 1.8 V to 5.5 V

F = V_{CC} = 1.6 V or 1.7 V to 5.5 V

Package[(1)]

MN = SO8N (150 mil width)

DW = TSSOP8 (169 mil width)

MC = UFDFPN8 (DFN8)

CT = 8-bump WLCSP

MH = UFDFPN5 (DFN5)

CS = 5-bump WLCSP

CU = 4-bump WLCSP

Device grade

6 = Industrial: device tested with standard test flow over -40 to 85 °C

Option

T = Tape and reel packing

blank = tube packing

Plating technology

P or G = RoHS compliant and halogen-free (ECOPACK2)

Process[(2)] **or Packing option**

/K or /T = Manufacturing technology code

/12 = Packing 12 mm tape

Option

Blank = No back side coating

F = Back side coating

1. *All packages are ECOPACK2 (RoHS-compliant and free of brominated, chlorinated and antimony-oxide flame retardants).*
2. *These process letters appear on the device package (marking) and on the shipment box. Contact your nearest ST Sales Office for further information.*

Table 29. Ordering information scheme (unsawn wafer)

Example:[1]	M24	C64 -	F	T	W	20	I	/90
Device type								
M24 = I^2C serial access EEPROM								
Device function								
C64 = 64 Kbit (8192 x 8 bit)								
Operating voltage								
F = V_{CC} = 1.7 V to 5.5 V								
Process								
T = F8H+								
Delivery form								
W =Wafer (bare die)								
Wafer thickness								
20 = Non-backlapped wafer								
Wafer testing								
I = Inkless test								
Device grade								
90 = -40°C to 85°C								

1. *For all information concerning the M24C64 delivered in unsawn wafer, contact your nearest ST Sales Office.*

Note: For a list of available options (memory, package, and so on) or for further information on any aspect of this device, contact your nearest ST sales office.

Note: Parts marked as "ES", "E" or accompanied by an Engineering Sample notification letter, are not yet qualified and therefore not approved for use in production. ST is not responsible for any consequences resulting from such use. In no event will ST be liable for the customer using any of these engineering samples in production. ST Quality has to be contacted prior to any decision to use these Engineering samples to run qualification activity.

Revision history

Table 30. Document revision history

Date	Revision	Changes
14-Mar-2018	36	Added Table 3:WLCSP 5-bumpsignals vs.bump position, Table 4: WLCSP 8-bump signals vs bump position Updated Figure 6: WLCSP 8-bump thin connections(M24C64- DFCT6TP/K)
28-Jul-2022	37	Updated: • Section Features, Section 2.2 Serial data (SDA), Section 3 Block diagram, Section 4.2 Stop condition, Section 9 Package information with all its subsection • added note in Figure 13 • Table 8, Table 9, Table 10, Table 13, Table 14, Table 15, Table 16. DC characteristics (M24C64-W), Table 17, Table 18, Table 19, Table 20, Table 28 Removed any reference to package PDIP8
07-Feb-2023	38	Updated: • Table 6. Most significant address byte • Figure 10. Write mode sequences with $\overline{WC}$ = 0 (data write enabled), Figure 11. Write mode sequences with $\overline{WC}$ = 1 (data write inhibited), Figure 13. Read mode sequences

Contents

1 **Description** 2
2 **Signal description** 5
2.1 Serial clock (SCL) 5
2.2 Serial data (SDA) 5
2.3 Chip enable (E2, E1, E0) 5
2.4 Write control ($\overline{WC}$) 5
2.5 V_{SS} (ground) 5
2.6 Supply voltage (V_{CC}) 6
2.6.1 Operating supply voltage (V_{CC}) 6
2.6.2 Power-up conditions 6
2.6.3 Device reset 6
2.6.4 Power-down conditions 6
3 **Block diagram** 7
4 **Device operation** 8
4.1 Start condition 9
4.2 Stop condition 9
4.3 Data input 9
4.4 Acknowledge bit (ACK) 9
4.5 Device addressing 10
5 **Instructions** 11
5.1 Write operations 11
5.1.1 Byte write 12
5.1.2 Page write 13
5.1.3 Write identification page (M24C64-D only) 14
5.1.4 Lock identification page (M24C64-D only) 14
5.1.5 ECC (error correction code) and write cycling 14
5.1.6 Minimizing write delays by polling on ACK 15
5.2 Read operations 16
5.2.1 Random address read 17
5.2.2 Current address read 17
5.2.3 Sequential read 17
5.2.4 Read identification page (M24C64-D only) 17
5.2.5 Read the lock status (M24C64-D only) 17
6 **Initial delivery state** 18

7 Maximum rating 19
8 DC and AC parameters 20
9 Package information 29
9.1 WLCSP4 (CU) ultra thin package information 29
9.1.1 WLCSP4 (CU) package footprint 30
9.2 WLCSP5 (CS) package information 31
9.2.1 WLCSP5 (CS) package footprint 32
9.3 UFDFPN5 (DFN5) package information 33
9.3.1 UFDFPN5 package footprint 34
9.4 UFDFPN8 (DFN8) package information 35
9.4.1 UFDFPN8 package footprint 36
9.5 TSSOP8 package information 37
9.5.1 TSSOP8 package footprint 38
9.6 SO8N package information 39
9.6.1 SO8N package footprint 40
9.7 WLCSP8 (CT) package information 41
9.7.1 WLCSP8 package footprint 42
10 Ordering information 43
Revision history 45

List of tables

Table 1. Signal names . . . 2
Table 2. WLCSP 4-bump signal vs. bump position . . . 3
Table 3. WLCSP 5-bump signals vs. bump position . . . 4
Table 4. WLCSP 8-bump signals vs. bump position . . . 4
Table 5. Device select code . . . 10
Table 6. Most significant address byte . . . 11
Table 7. Least significant address byte . . . 11
Table 8. Absolute maximum ratings . . . 19
Table 9. Operating conditions (voltage range W) . . . 20
Table 10. Operating conditions (voltage range R) . . . 20
Table 11. Operating conditions (voltage range F) . . . 20
Table 12. AC measurement conditions . . . 20
Table 13. Input parameters . . . 21
Table 14. Cycling performance . . . 21
Table 15. Memory cell data retention . . . 21
Table 16. DC characteristics (M24C64-W) . . . 22
Table 17. DC characteristics (M24C64-R) . . . 23
Table 18. DC characteristics (M24C64-F, M24C64-DF) . . . 24
Table 19. 400 kHz AC characteristics . . . 25
Table 20. 1 MHz AC characteristics . . . 26
Table 21. WLCSP4 (CU) - Mechanical data . . . 30
Table 22. WLCSP5 - Mechanical data . . . 32
Table 23. UFDFPN5 - Mechanical data . . . 33
Table 24. UFDFPN8 - Mechanical data . . . 36
Table 25. TSSOP8 – Mechanical data . . . 37
Table 26. SO8N – Mechanical data . . . 39
Table 27. WLCSP8 - Mechanical data . . . 42
Table 28. Ordering information scheme . . . 43
Table 29. Ordering information scheme (unsawn wafer) . . . 44
Table 30. Document revision history . . . 45

List of figures

Figure 1. Logic diagram. . . . 2
Figure 2. 8-pin package connections, top view . . . 2
Figure 3. UFDFPN5 (DFN5) package connections . . . 3
Figure 4. WLCSP 4-bump ultra thin package connections . . . 3
Figure 5. WLCSP 5-bump connections . . . 3
Figure 6. WLCSP 8-bump connections . . . 4
Figure 7. Chip enable inputs connection . . . 5
Figure 8. Block diagram . . . 7
Figure 9. I^2C bus protocol . . . 8
Figure 10. Write mode sequences with $\overline{WC}$ = 0 (data write enabled) . . . 12
Figure 11. Write mode sequences with $\overline{WC}$ = 1 (data write inhibited). . . . 13
Figure 12. Write cycle polling flowchart using ACK . . . 15
Figure 13. Read mode sequences . . . 16
Figure 14. AC measurement I/O waveform . . . 21
Figure 15. Maximum R_{bus} value versus bus parasitic capacitance (C_{bus}) for an I^2C bus at maximum frequency f_C = 400 kHz . . . 27
Figure 16. Maximum R_{bus} value versus bus parasitic capacitance (C_{bus}) for an I^2C bus at maximum frequency f_C = 1 MHz 27
Figure 17. AC waveforms . . . 28
Figure 18. WLCSP4 (CU) - Outline . . . 29
Figure 19. WLCSP4 (CU) - Footprint example . . . 30
Figure 20. WLCSP5 - Outline. . . . 31
Figure 21. WLCSP5 - Footprint example . . . 32
Figure 22. UFDFPN5 - Outline . . . 33
Figure 23. UFDFPN5 - Footprint example . . . 34
Figure 24. UFDFPN8 - Outline . . . 35
Figure 25. UFDFPN8 - Footprint example . . . 36
Figure 26. TSSOP8 – Outline . . . 37
Figure 27. TSSOP8 – Footprint example . . . 38
Figure 28. SO8N – Outline . . . 39
Figure 29. SO8N - Footprint example . . . 40
Figure 30. WLCSP8 - Outline. . . . 41
Figure 31. WLCSP8 - Footprint example . . . 42

IMPORTANT NOTICE – READ CAREFULLY

STMicroelectronics NV and its subsidiaries (“ST”) reserve the right to make changes, corrections, enhancements, modifications, and improvements to ST products and/or to this document at any time without notice. Purchasers should obtain the latest relevant information on ST products before placing orders. ST products are sold pursuant to ST’s terms and conditions of sale in place at the time of order acknowledgment.

Purchasers are solely responsible for the choice, selection, and use of ST products and ST assumes no liability for application assistance or the design of purchasers’ products.

No license, express or implied, to any intellectual property right is granted by ST herein.

Resale of ST products with provisions different from the information set forth herein shall void any warranty granted by ST for such product.

ST and the ST logo are trademarks of ST. For additional information about ST trademarks, refer to www.st.com/trademarks. All other product or service names are the property of their respective owners.

Information in this document supersedes and replaces information previously supplied in any prior versions of this document.

© 2023 STMicroelectronics – All rights reserved